Copyright © June 2009, Brian G. Agee. All rights reserved.

Topics

- Description
- **Capabilities**
- Methods

Copyright © June 2009, Brian G. Agee. All rights reserved.

Capabilities

- **Motivating model: multielement array, noiseless environments**
- Extension to noisy environments
- Extension to other linear processor structures

Copyright © June 2009, Brian G. Agee. All rights reserved.

Interference Excision System Design Methodology

- Identify the interference excision scenario
  - Is interference the real issue?
  - Can the problem be solved by other means (e.g., interference avoidance)?
  - What system/environment factors do you control?
- **Develop an end-to-end model for the interference excision problem**
  - **SOI and SNOI transmit signal models (if appropriate)**
  - **SOI-to-receiver and SNOI-to-receiver channel model**
    - » **General model**
    - » **Learnable parameters**
    - » Probable deviations
  - Expected receiver system/network impairments
- Develop a receiver system/network structure that can excise the interference
  - Prove if possible through analysis and simulations using ground truth data
- Develop an effective adaptation algorithm
  - Can adapt the receiver structure to achieve the desired excision
  - Robust to model deviations
  - Cost effective
- Adjust controllable factors as needed/possible to maximize utility (cost or effectiveness)

Copyright © June 2009, Brian G. Agee. All rights reserved.

Example: Array-Based Excision Problem

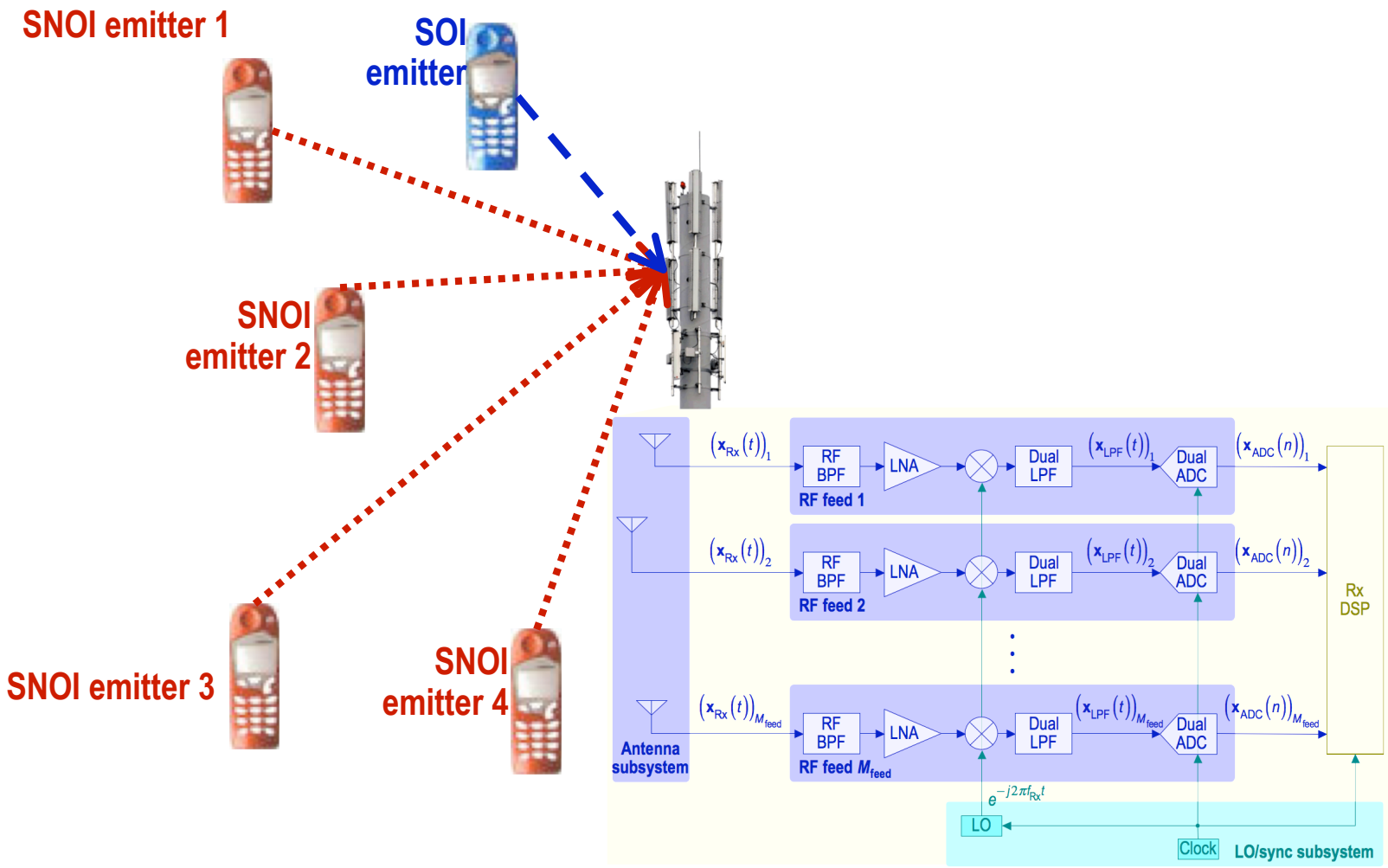

Copyright © June 2009, Brian G. Agee. All rights reserved.

Exemplary Multielement Receiver

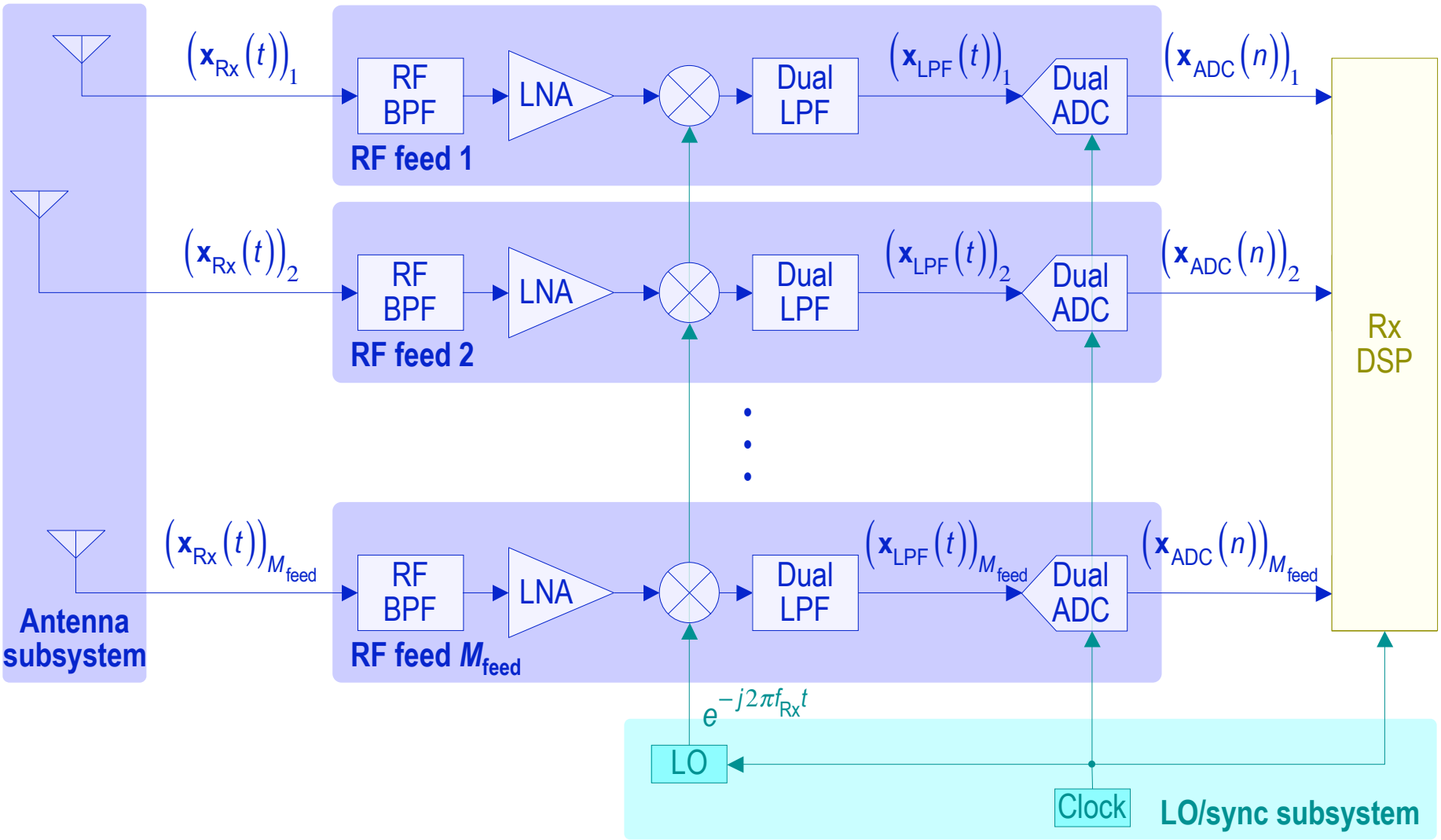

Copyright © June 2009, Brian G. Agee. All rights reserved.

B³

Spatial Reception Model

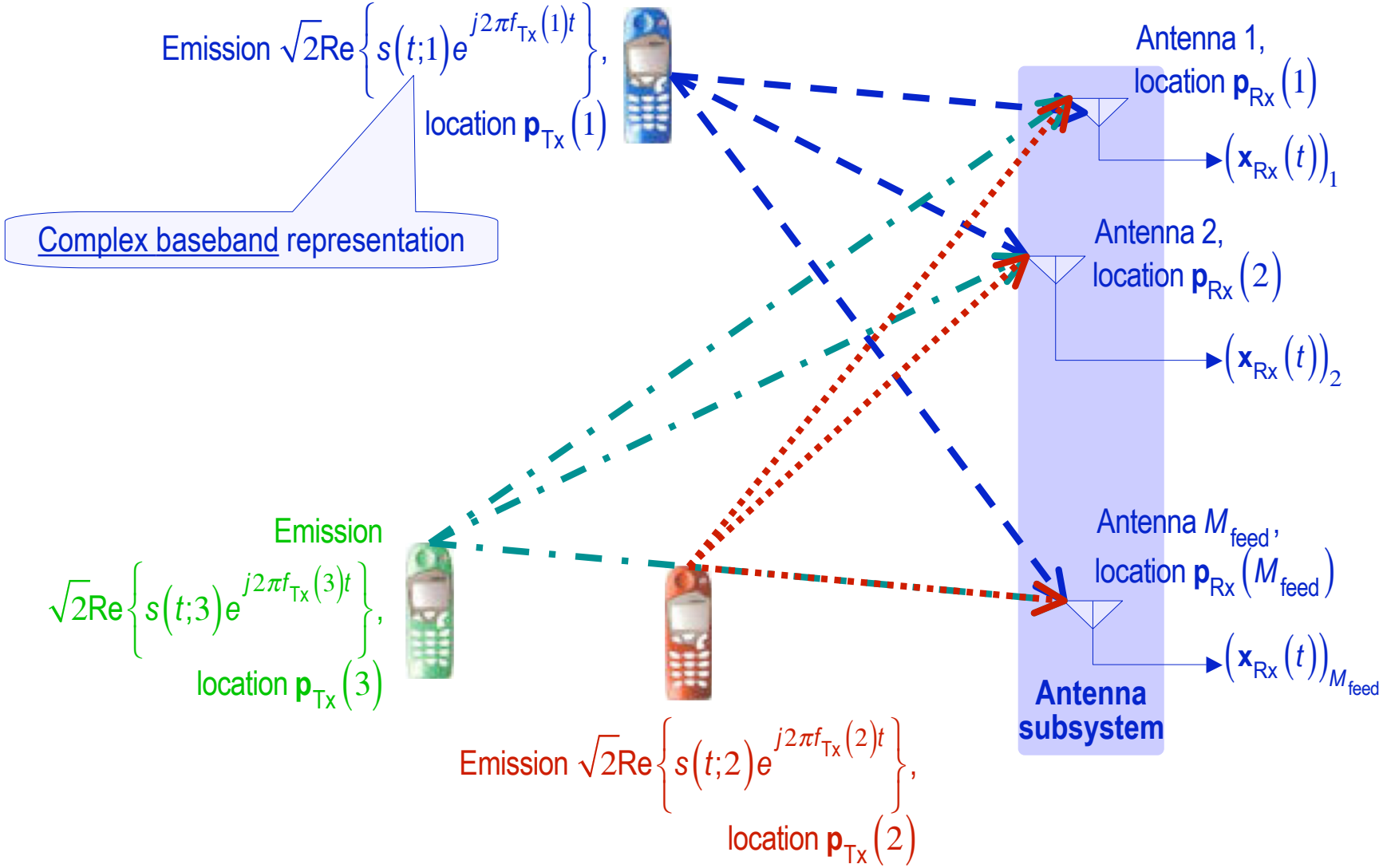

Copyright © June 2009, Brian G. Agee. All rights reserved.

B³

Spatial Reception Model

Emission $\sqrt{2}\mathrm{Re}\left\{s(t)e^{j2\pi f_{\mathrm{Tx}}t}\right\}$, location $\mathbf{p}_{\mathrm{Tx}}$

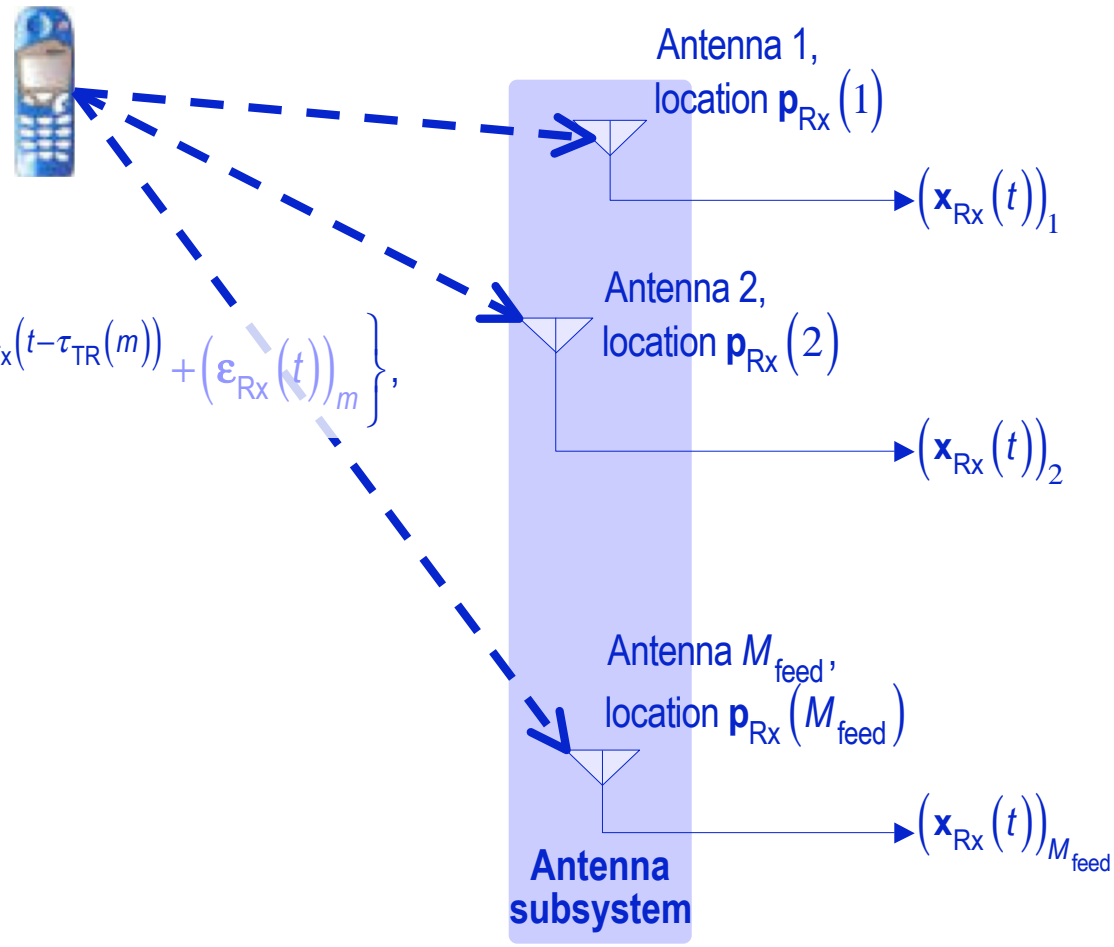

$$\left(\mathbf{x}_{\mathrm{Rx}}(t)\right)_m = \sqrt{2}\,\mathrm{Re}\left\{g_{\mathrm{TR}}(m)s\left(t-\tau_{\mathrm{TR}}(m)\right)e^{j2\pi f_{\mathrm{Tx}}\left(t-\tau_{\mathrm{TR}}(m)\right)} + \left(\boldsymbol{\varepsilon}_{\mathrm{Rx}}(t)\right)_m\right\},$$

$$\tau_{\mathrm{TR}}(m) \triangleq \frac{1}{c}\left\|\mathbf{p}_{\mathrm{Tx}} - \mathbf{p}_{\mathrm{Rx}}(m)\right\|$$

Copyright © June 2009, Brian G. Agee. All rights reserved.

B³

Spatial Reception Model

Emission $\sqrt{2}\mathrm{Re}\left\{s(t)e^{j2\pi f_{\mathrm{Tx}}t}\right\}$, location $\mathbf{p}_{\mathrm{Tx}}$

Antenna 1, location $\mathbf{p}_{\mathrm{Rx}}+\boldsymbol{\delta}_{\mathrm{ANT}}(1)$

$(\mathbf{x}_{\mathrm{Rx}}(t))_1$

Antenna 2, location $\mathbf{p}_{\mathrm{Rx}}+\boldsymbol{\delta}_{\mathrm{ANT}}(2)$

$(\mathbf{x}_{\mathrm{Rx}}(t))_2$

Antenna M_{feed}, location $\mathbf{p}_{\mathrm{Rx}}+\boldsymbol{\delta}_{\mathrm{ANT}}(M_{\mathrm{feed}})$

$(\mathbf{x}_{\mathrm{Rx}}(t))_{M_{\mathrm{feed}}}$

Antenna subsystem

$$\left(\mathbf{x}_{\mathrm{Rx}}(t)\right)_m=\sqrt{2}\,\mathrm{Re}\left\{g_{\mathrm{TR}}(m)s\left(t-\tau_{\mathrm{TR}}(m)\right)e^{j2\pi f_{\mathrm{Tx}}\left(t-\tau_{\mathrm{TR}}(m)\right)}+\left(\boldsymbol{\varepsilon}_{\mathrm{Rx}}(t)\right)_m\right\},$$

$$\tau_{\mathrm{TR}}(m)\triangleq\frac{1}{c}\left\|\mathbf{p}_{\mathrm{Tx}}-\left(\mathbf{p}_{\mathrm{Rx}}+\boldsymbol{\delta}_{\mathrm{ANT}}(m)\right)\right\|$$

$$=\frac{1}{c}\left\|\left(\mathbf{p}_{\mathrm{Tx}}-\mathbf{p}_{\mathrm{Rx}}\right)-\boldsymbol{\delta}_{\mathrm{ANT}}(m)\right\|$$

Narrowband antenna array approximation

$$\approx\frac{1}{c}\left(\left\|\mathbf{p}_{\mathrm{Tx}}-\mathbf{p}_{\mathrm{Rx}}\right\|-\boldsymbol{\delta}_{\mathrm{ANT}}^{T}(m)\frac{\mathbf{p}_{\mathrm{Tx}}-\mathbf{p}_{\mathrm{Rx}}}{\left\|\mathbf{p}_{\mathrm{Tx}}-\mathbf{p}_{\mathrm{Rx}}\right\|}\right),\quad\left\|\boldsymbol{\delta}_{\mathrm{ANT}}(m)\right\|\ll\left\|\mathbf{p}_{\mathrm{Tx}}-\mathbf{p}_{\mathrm{Rx}}\right\|$$

$$=\tau_{\mathrm{TR}}-\frac{1}{c}\boldsymbol{\delta}_{\mathrm{ANT}}^{T}(m)\mathbf{u}_{\mathrm{TR}},\quad\begin{cases}\tau_{\mathrm{TR}}\triangleq\dfrac{1}{c}\left\|\mathbf{p}_{\mathrm{Tx}}-\mathbf{p}_{\mathrm{Rx}}\right\|, & \text{path delay}\ (\textit{range}\ \text{dependent})\\[2ex] \mathbf{u}_{\mathrm{TR}}\triangleq\dfrac{\mathbf{p}_{\mathrm{Tx}}-\mathbf{p}_{\mathrm{Rx}}}{\left\|\mathbf{p}_{\mathrm{Tx}}-\mathbf{p}_{\mathrm{Rx}}\right\|}, & \text{direction vector}\ (\textit{direction-of-arrival}\ \text{dependent})\end{cases}$$

$g_{\mathrm{TR}}(m)\approx g_{\mathrm{TR}}g_{\mathrm{ANT}}(\mathbf{u}_{\mathrm{TR}};m)$, $g_{\mathrm{ANT}}(\mathbf{u};m)\triangleq$ Antenna (voltage) gain in direction $\mathbf{u}$

Copyright © June 2009, Brian G. Agee. All rights reserved.

B³

Narrowband Spatial Reception Model

Emission $\sqrt{2}\mathrm{Re}\left\{s(t)e^{j2\pi f_{\mathrm{Tx}}t}\right\}$, location $\mathbf{p}_{\mathrm{Tx}}$

Bandwidth of $s(t) \ll \dfrac{c}{\left\|\boldsymbol{\delta}_{\mathrm{ANT}}(m)\right\|}$

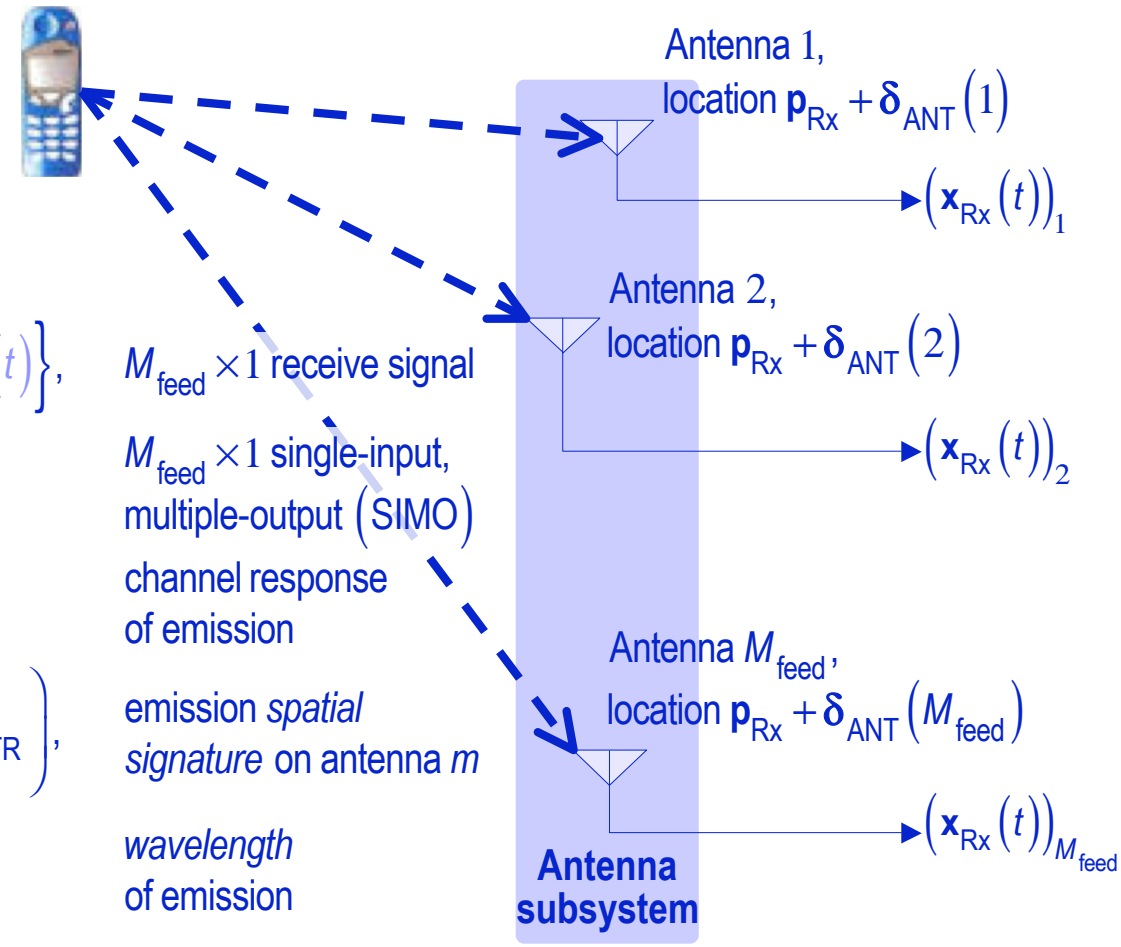

$$\mathbf{x}_{\mathrm{Rx}}(t) \approx \sqrt{2}\,\mathrm{Re}\left\{\mathbf{h}_{\mathrm{TR}} s(t-\tau_{\mathrm{TR}}) e^{j2\pi f_{\mathrm{Tx}}t} + \boldsymbol{\varepsilon}_{\mathrm{Rx}}(t)\right\},$$

$M_{\mathrm{feed}} \times 1$ receive signal

$$\mathbf{h}_{\mathrm{TR}} \triangleq g_{\mathrm{TR}} e^{-j2\pi f_{\mathrm{Tx}}\tau_{\mathrm{TR}}} \mathbf{a}_{\mathrm{ANT}},$$

$M_{\mathrm{feed}} \times 1$ single-input, multiple-output (SIMO) channel response of emission

$$(\mathbf{a}_{\mathrm{ANT}})_m \triangleq g_{\mathrm{ANT}}(\mathbf{u}_{\mathrm{TR}}; m) \exp\left(j\frac{2\pi}{\lambda_{\mathrm{Tx}}} \boldsymbol{\delta}_{\mathrm{ANT}}^T(m)\mathbf{u}_{\mathrm{TR}}\right),$$

emission *spatial signature* on antenna m

$$\lambda_{\mathrm{Tx}} \triangleq \frac{c}{f_{\mathrm{Tx}}},$$

wavelength of emission

Copyright © June 2009, Brian G. Agee. All rights reserved.

B³

Spatial Reception Model at ADC Outputs (Narrowband LPF's)

Emission $\sqrt{2}\mathrm{Re}\left\{s(t)e^{j2\pi f_{\mathrm{Tx}}t}\right\}$, location $\mathbf{p}_{\mathrm{Tx}}$

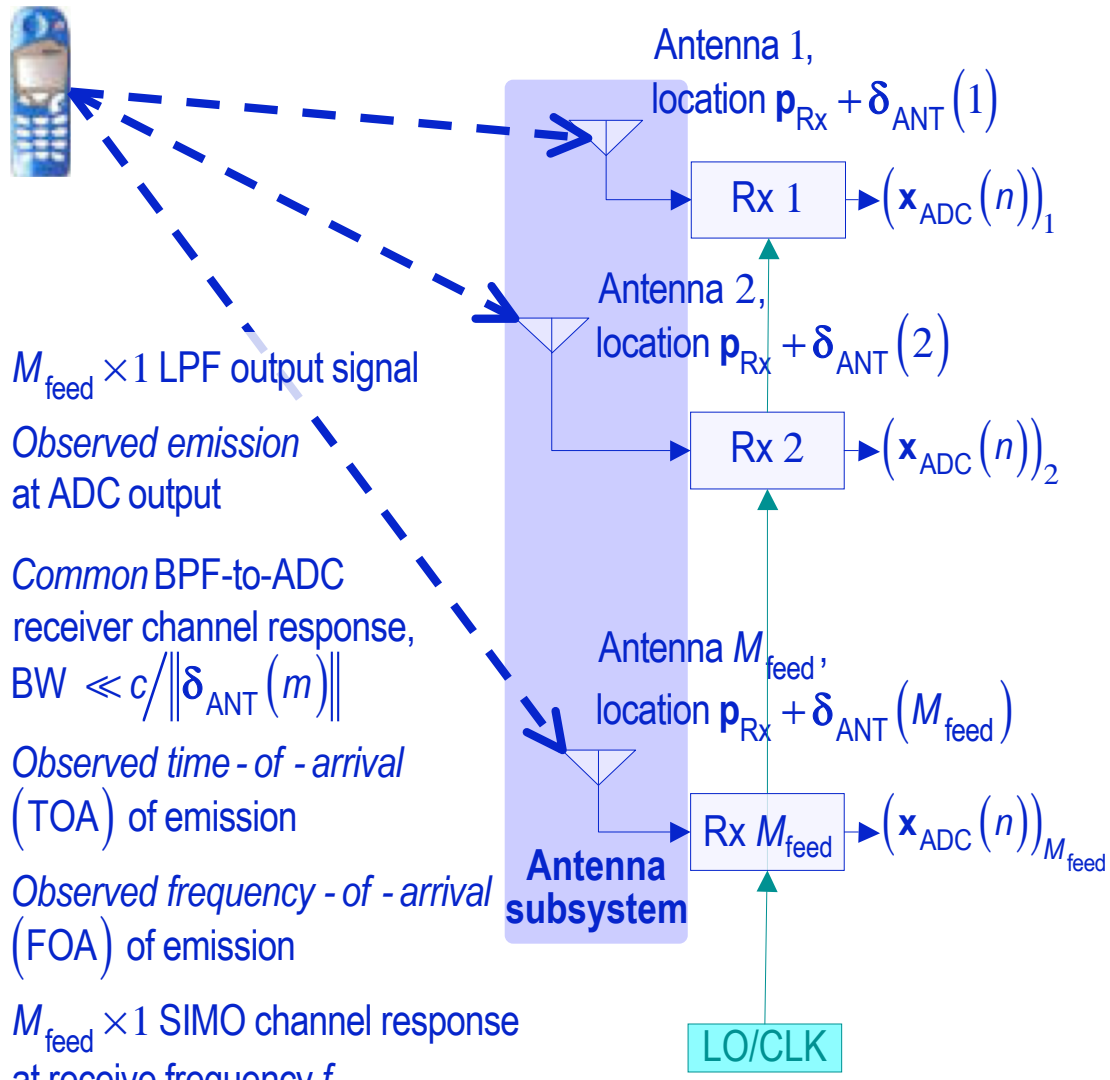

$$\mathbf{x}_{\mathrm{ADC}}(n) \approx \mathbf{h}_{\mathrm{TR}}(f_{\mathrm{Rx}})s_{\mathrm{ADC}}(n)+\boldsymbol{\varepsilon}_{\mathrm{ADC}}(n),$$

$M_{\mathrm{feed}}\times 1$ LPF output signal

$$s_{\mathrm{ADC}}(n) = h_{\mathrm{Rx}}(t)\otimes\left(s(t-\tau_{\mathrm{TR}})e^{j2\pi\alpha_{\mathrm{TR}}t}\right)\Big|_{t=nT_{\mathrm{ADC}}}$$

Observed emission at ADC output

$$H_{\mathrm{Rx}}(f) \triangleq H_{\mathrm{ADC}}(f)H_{\mathrm{LPF}}(f)H_{\mathrm{BPF}}(f+f_{\mathrm{Rx}}),$$

Common BPF-to-ADC receiver channel response, BW $\ll c/\left\|\boldsymbol{\delta}_{\mathrm{ANT}}(m)\right\|$

$$\tau_{\mathrm{TR}} \triangleq \frac{1}{c}\left\|\mathbf{p}_{\mathrm{Tx}}-\mathbf{p}_{\mathrm{Rx}}\right\|+\tau_{\mathrm{Rx}},$$

Observed time-of-arrival (TOA) of emission

$$\alpha_{\mathrm{TR}} \triangleq f_{\mathrm{Tx}}-f_{\mathrm{Rx}},$$

Observed frequency-of-arrival (FOA) of emission

$$\mathbf{h}_{\mathrm{TR}}(f_{\mathrm{Rx}}) \approx g_{\mathrm{TR}}(f_{\mathrm{Rx}})\mathbf{a}_{\mathrm{ANT}}(f_{\mathrm{Rx}}),$$

$M_{\mathrm{feed}}\times 1$ SIMO channel response at receive frequency f_{Rx}

Copyright © June 2009, Brian G. Agee. All rights reserved.

B³

Spatial Reception Model, Multiple Emitters

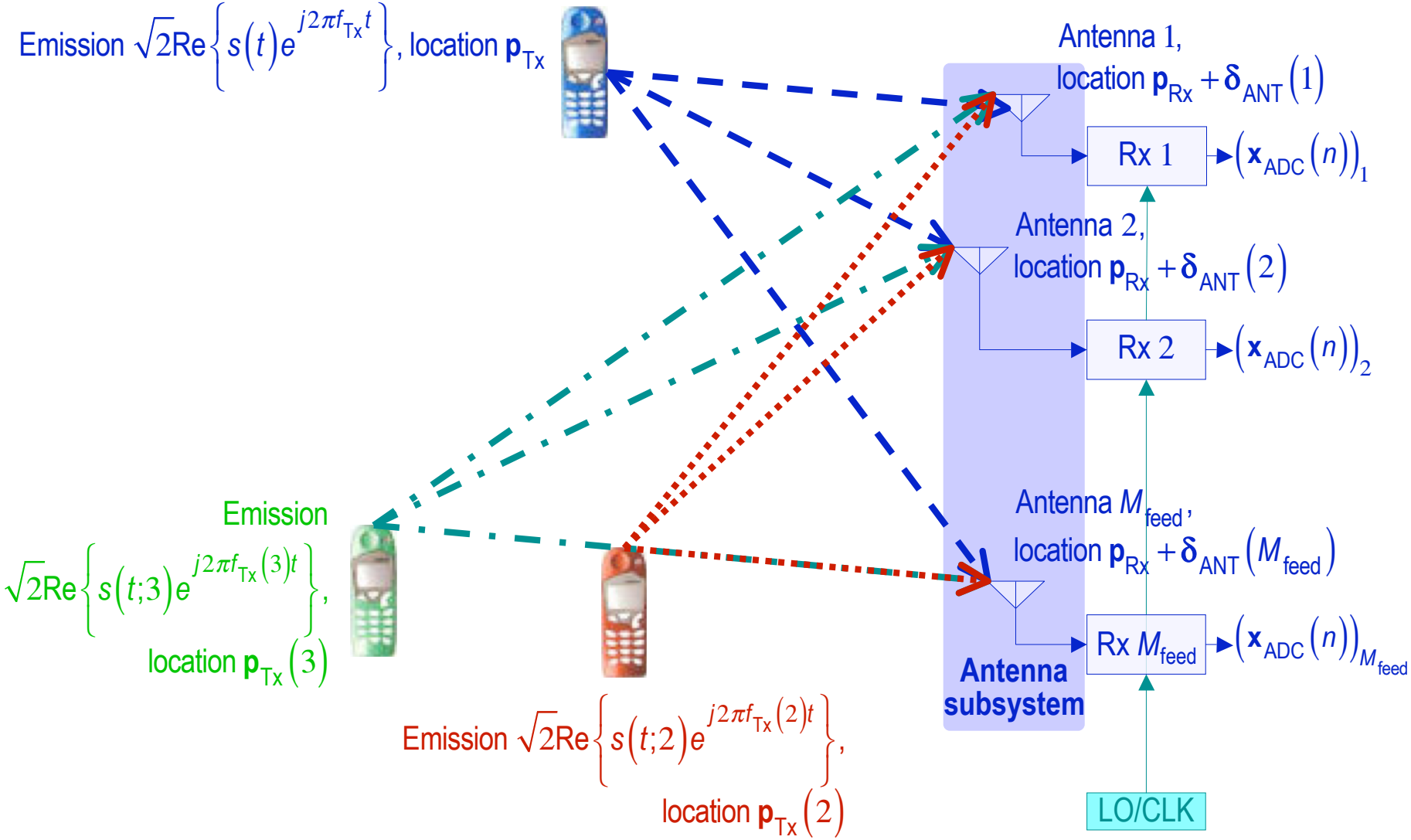

Copyright © June 2009, Brian G. Agee. All rights reserved.

B³

Spatial Reception Model, Multiple Emitters

M_{feed} equations (degrees of freedom)

3 unknowns

Emissions completely recoverable if $M_{\text{feed}} \geq 3$, regardless of their relative strength!

$$\begin{pmatrix} \left(\mathbf{x}_{\text{ADC}}(n)\right)_1 \\ \vdots \\ \left(\mathbf{x}_{\text{ADC}}(n)\right)_{M_{\text{feed}}} \end{pmatrix} \approx \begin{pmatrix} \left(\mathbf{H}_{\text{TR}}\right)_{1,1} & \left(\mathbf{H}_{\text{TR}}\right)_{1,2} & \left(\mathbf{H}_{\text{TR}}\right)_{1,3} \\ \vdots & \vdots & \vdots \\ \left(\mathbf{H}_{\text{TR}}\right)_{M_{\text{feed}},1} & \left(\mathbf{H}_{\text{TR}}\right)_{M_{\text{feed}},2} & \left(\mathbf{H}_{\text{TR}}\right)_{M_{\text{feed}},3} \end{pmatrix} \begin{pmatrix} \left(\mathbf{s}_{\text{ADC}}(n)\right)_1 \\ \left(\mathbf{s}_{\text{ADC}}(n)\right)_2 \\ \left(\mathbf{s}_{\text{ADC}}(n)\right)_3 \end{pmatrix} + \boldsymbol{\varepsilon}_{\text{ADC}}(n)$$

$$= \mathbf{H}_{\text{TR}} \mathbf{s}_{\text{ADC}}(n) + \boldsymbol{\varepsilon}_{\text{ADC}}(n),$$

$M_{\text{feed}} \times 1$ received ADC output signal

$$\left(\mathbf{H}_{\text{TR}}\right)_{m,\ell} \approx g_{\text{TR}}(\ell) g_{\text{ANT}}\left(\mathbf{u}_{\text{TR}}(\ell)\right) \exp\left(j \frac{2\pi}{\lambda_{\text{Rx}}} \boldsymbol{\delta}_{\text{ANT}}^T \mathbf{u}_{\text{TR}}(\ell) \right),$$

Feed m, emission ℓ MIMO *network* response

$$\left(\mathbf{s}_{\text{ADC}}(n)\right)_\ell = h_{\text{Rx}}(t) \otimes \left(s\left(t - \tau_{\text{TR}}(\ell); \ell\right) e^{j2\pi\alpha_{\text{TR}}(\ell)t} \right)\Big|_{t = nT_{\text{ADC}}}$$

Emission ℓ observed at ADC output

$$\tau_{\text{TR}}(\ell) \triangleq \frac{1}{c} \left\| \mathbf{p}_{\text{Tx}} - \mathbf{p}_{\text{Rx}}(\ell) \right\| + \tau_{\text{Rx}},$$

Emission ℓ observed TOA

$$\alpha_{\text{TR}}(\ell) \triangleq f_{\text{Tx}}(\ell) - f_{\text{Rx}},$$

Emission ℓ observed FOA

$$\mathbf{u}_{\text{TR}}(\ell) \triangleq \frac{\mathbf{p}_{\text{Tx}} - \mathbf{p}_{\text{Rx}}(\ell)}{\left\| \mathbf{p}_{\text{Tx}} - \mathbf{p}_{\text{Rx}}(\ell) \right\|},$$

Emission ℓ observed DOA

Copyright © June 2009, Brian G. Agee. All rights reserved.

B³

Linear Signal Separation Solution, Noiseless Environment

$$\mathbf{x}_{\text{ADC}}(n) = \mathbf{H}_{\text{TR}}\mathbf{s}_{\text{ADC}}(n),$$

$$\begin{cases} \mathbf{x}_{\text{ADC}}(n) = M_{\text{feed}} \times 1 \text{ sample } n \text{ ADC output vector} \\ \mathbf{s}_{\text{ADC}}(n) = L_{\text{emit}} \times 1 \text{ sample } n \text{ emission vector at ADC output} \\ \mathbf{H}_{\text{TR}} = M_{\text{feed}} \times L_{\text{emit}} \text{ MIMO network response} \\ \text{rank}\{\mathbf{H}_{\text{TR}}\} = L_{\text{emit}} \end{cases}$$

$$\Rightarrow \mathbf{s}_{\text{ADC}}(n) = \mathbf{W}^H \mathbf{x}_{\text{ADC}}(n),$$

$$\mathbf{W} = \mathbf{H}_{\text{TR}}\left(\mathbf{H}_{\text{TR}}^H\mathbf{H}_{\text{TR}}\right)^{-1}$$

$$\begin{aligned} \mathbf{W}^H\mathbf{x}_{\text{ADC}}(n) &= \left(\mathbf{H}_{\text{TR}}\left(\mathbf{H}_{\text{TR}}^H\mathbf{H}_{\text{TR}}\right)^{-1}\right)^H \mathbf{x}_{\text{ADC}}(n) \\ &= \left(\mathbf{H}_{\text{TR}}^H\mathbf{H}_{\text{TR}}\right)^{-1}\mathbf{H}_{\text{TR}}^H\mathbf{x}_{\text{ADC}}(n) \\ &= \left(\mathbf{H}_{\text{TR}}^H\mathbf{H}_{\text{TR}}\right)^{-1}\mathbf{H}_{\text{TR}}^H\left(\mathbf{H}_{\text{TR}}\mathbf{s}_{\text{ADC}}(n)\right) \\ &= \left(\mathbf{H}_{\text{TR}}^H\mathbf{H}_{\text{TR}}\right)^{-1}\left(\mathbf{H}_{\text{TR}}^H\mathbf{H}_{\text{TR}}\right)\mathbf{s}_{\text{ADC}}(n) \\ &= \mathbf{s}_{\text{ADC}}(n) \end{aligned}$$

- $M_{\text{feed}} \times L_{\text{emit}}$ linear combiner
- Separates all L_{emit} emissions
- No dependence on temporal <u>structure</u> of received emissions, including TOA and FOA
- No dependence on collect time (<u>instantaneous solution possible</u>)

Copyright © June 2009, Brian G. Agee. All rights reserved.

B³

Linear Signal Separation Solution, Noiseless Environment

$$\mathbf{x}_{\text{ADC}}(n) = \mathbf{H}_{\text{TR}}\mathbf{s}_{\text{ADC}}(n),$$

$$\begin{cases} \mathbf{x}_{\text{ADC}}(n) = M_{\text{feed}} \times 1 \text{ sample } n \text{ ADC output vector} \\ \mathbf{s}_{\text{ADC}}(n) = L_{\text{emit}} \times 1 \text{ sample } n \text{ emission vector at ADC output} \\ \mathbf{H}_{\text{TR}} = M_{\text{feed}} \times L_{\text{emit}} \text{ MIMO network response} \\ \text{rank}\{\mathbf{H}_{\text{TR}}\} = L_{\text{emit}} \end{cases}$$

$$\mathbf{W} = \mathbf{H}_{\text{TR}}\left(\mathbf{H}_{\text{TR}}^H\mathbf{H}_{\text{TR}}\right)^{-1}$$

$$\Rightarrow \mathbf{s}_{\text{ADC}}(n) = \mathbf{W}^H\mathbf{x}_{\text{ADC}}(n),$$

$$\begin{aligned} \mathbf{W}^H\mathbf{x}_{\text{ADC}}(n) &= \left(\mathbf{H}_{\text{TR}}\left(\mathbf{H}_{\text{TR}}^H\mathbf{H}_{\text{TR}}\right)^{-1}\right)^H \mathbf{x}_{\text{ADC}}(n) \\ &= \left(\mathbf{H}_{\text{TR}}^H\mathbf{H}_{\text{TR}}\right)^{-1}\mathbf{H}_{\text{TR}}^H\mathbf{x}_{\text{ADC}}(n) \\ &= \left(\mathbf{H}_{\text{TR}}^H\mathbf{H}_{\text{TR}}\right)^{-1}\mathbf{H}_{\text{TR}}^H\left(\mathbf{H}_{\text{TR}}\mathbf{s}_{\text{ADC}}(n)\right) \\ &= \left(\mathbf{H}_{\text{TR}}^H\mathbf{H}_{\text{TR}}\right)^{-1}\left(\mathbf{H}_{\text{TR}}^H\mathbf{H}_{\text{TR}}\right)\mathbf{s}_{\text{ADC}}(n) \\ &= \mathbf{s}_{\text{ADC}}(n) \end{aligned}$$

<u>Requirements</u>

- Combiner <u>degrees of freedom</u> $M_{\text{feed}} \geq$ <u>number of emitters</u> L_{emit}
- Linearly-independent channel responses
  - For example, due to different emission directions-of-arrival (DOA's)

Copyright © June 2009, Brian G. Agee. All rights reserved.

B³

Linear Signal Separation Solution, Noiseless Environment

$$\mathbf{x}_{\text{ADC}}(n) = \mathbf{H}_{\text{TR}}\mathbf{s}_{\text{ADC}}(n),$$

$$\begin{cases} \mathbf{x}_{\text{ADC}}(n) = M_{\text{feed}} \times 1 \text{ sample } n \text{ ADC output vector} \\ \mathbf{s}_{\text{ADC}}(n) = L_{\text{emit}} \times 1 \text{ sample } n \text{ emission vector at ADC output} \\ \mathbf{H}_{\text{TR}} = M_{\text{feed}} \times L_{\text{emit}} \text{ MIMO network response} \\ \text{rank}\{\mathbf{H}_{\text{TR}}\} = L_{\text{emit}} \end{cases}$$

$$\Rightarrow \mathbf{s}_{\text{ADC}}(n) = \mathbf{W}^H\mathbf{x}_{\text{ADC}}(n),$$

$$\begin{cases} \mathbf{W} = \mathbf{G}\left(\mathbf{H}_{\text{TR}}^H\mathbf{G}\right)^{-1} \\ \mathbf{G} \in \mathbb{C}^{M_{\text{feed}} \times L_{\text{emit}}},\ \text{rank}\left\{\mathbf{G}^H\mathbf{H}_{\text{TR}}\right\} = L_{\text{emit}} \end{cases}$$

$$\begin{aligned} \mathbf{W}^H\mathbf{x}_{\text{ADC}}(n) &= \left(\mathbf{G}\left(\mathbf{H}_{\text{TR}}^H\mathbf{G}\right)^{-1}\right)^H \mathbf{x}_{\text{ADC}}(n) \\ &= \left(\mathbf{G}^H\mathbf{H}_{\text{TR}}\right)^{-1}\mathbf{G}^H\mathbf{x}_{\text{ADC}}(n) \\ &= \left(\mathbf{G}^H\mathbf{H}_{\text{TR}}\right)^{-1}\mathbf{G}^H\left(\mathbf{H}_{\text{TR}}\mathbf{s}_{\text{ADC}}(n)\right) \\ &= \left(\mathbf{G}^H\mathbf{H}_{\text{TR}}\right)^{-1}\left(\mathbf{G}^H\mathbf{H}_{\text{TR}}\right)\mathbf{s}_{\text{ADC}}(n) \\ &= \mathbf{s}_{\text{ADC}}(n) \end{aligned}$$

- $\mathbf{G}$ <u>arbitrary</u> full-rank $M_{\text{feed}} \times L_{\text{emit}}$ matrix, fully overlaps $\mathbf{H}_{\text{TR}}$ ($\text{rank}\{\mathbf{G}^H\mathbf{H}_{\text{TR}}\} = L_{\text{emit}}$)
  - <u>Infinite</u> number of solutions
  - "Best" separator dependent on other factors (e.g., noise)
- $\mathbf{G} \propto \mathbf{H}_{\text{TR}}$ is <u>minimum-norm</u> solution

Copyright © June 2009, Brian G. Agee. All rights reserved.

B³

Linear Interference Excision Solution, Noiseless Environment

$$\mathbf{x}_{\text{ADC}}(n) = \begin{bmatrix} \mathbf{h}_{\text{SOI}} & \mathbf{H}_{\text{SNOI}} \end{bmatrix} \begin{pmatrix} s_{\text{SOI}}(n) \\ \mathbf{s}_{\text{SNOI}}(n) \end{pmatrix},$$

$$\begin{cases} s_{\text{SOI}}(n) = \text{Sample } n \text{ SOI emission at ADC output} \\ \mathbf{s}_{\text{SNOI}}(n) = L_{\text{SNOI}} \times 1 \text{ sample } n \text{ SNOI emission at ADC output} \\ \mathbf{h}_{\text{SOI}} = M_{\text{feed}} \times 1 \text{ SIMO SOI channel response} \\ \mathbf{H}_{\text{SNOI}} = M_{\text{feed}} \times L_{\text{SNOI}} \text{ MIMO SNOI network response} \\ \text{rank}\{\mathbf{H}_{\text{SNOI}}\} \le L_{\text{SNOI}} \\ \text{rank}\{\mathbf{H}_{\text{TR}}\} \le L_{\text{emit}}, \quad \mathbf{H}_{\text{TR}} = \begin{bmatrix} \mathbf{h}_{\text{SOI}} & \mathbf{H}_{\text{SNOI}} \end{bmatrix} \end{cases}$$

$$\Rightarrow \quad s_{\text{SOI}}(n) = \mathbf{w}_{\text{SOI}}^H \mathbf{x}_{\text{ADC}}(n),$$

$$\mathbf{w}_{\text{SOI}} = \mathbf{H}_{\text{TR}} \left(\mathbf{H}_{\text{TR}}^H \mathbf{H}_{\text{TR}} \right)^{-1} \begin{pmatrix} 1 \\ \mathbf{0}_{L_{\text{SNOI}}} \end{pmatrix}$$

$$\begin{aligned} \mathbf{w}_{\text{SOI}}^H \mathbf{x}_{\text{ADC}}(n) &= \begin{bmatrix} 1 & \mathbf{0}_{L_{\text{SNOI}}}^T \end{bmatrix} \left(\mathbf{H}_{\text{TR}}^H \mathbf{H}_{\text{TR}} \right)^{-1} \mathbf{H}_{\text{TR}}^H \mathbf{x}_{\text{ADC}}(n) \\ &= \begin{bmatrix} 1 & \mathbf{0}_{L_{\text{SNOI}}}^T \end{bmatrix} \begin{pmatrix} s_{\text{SOI}}(n) \\ \mathbf{s}_{\text{SNOI}}(n) \end{pmatrix} \\ &= s_{\text{SOI}}(n) \end{aligned}$$

- $M_{\text{feed}} \times 1$ linear combiner — extracts only the SOI (less complex)
- No dependence on collect time or SOI/SNOI content or structure
- $\text{rank}\{\mathbf{H}_{\text{SNOI}}\}$ can be $< L_{\text{SNOI}}$ (linearly dependent channels, e.g., same DOA's)

Copyright © June 2009, Brian G. Agee. All rights reserved.

B³

Linear Interference Excision Solution, Noiseless Environment

$$\mathbf{x}_{\mathrm{ADC}}(n) = \mathbf{h}_{\mathrm{SOI}} s_{\mathrm{SOI}}(n) + \mathbf{H}_{\mathrm{SNOI}} \mathbf{s}_{\mathrm{SNOI}}(n),$$

$$\begin{cases} s_{\mathrm{SOI}}(n) = \text{Sample } n \text{ SOI emission at ADC output} \\ \mathbf{s}_{\mathrm{SNOI}}(n) = L_{\mathrm{SNOI}} \times 1 \text{ sample } n \text{ SNOI emission at ADC output} \\ \mathbf{h}_{\mathrm{SOI}} = M_{\mathrm{feed}} \times 1 \text{ SIMO SOI channel response} \\ \mathbf{H}_{\mathrm{SNOI}} = M_{\mathrm{feed}} \times L_{\mathrm{SNOI}} \text{ MIMO SNOI network response} \\ \mathrm{rank}\{\mathbf{H}_{\mathrm{SNOI}}\} \le L_{\mathrm{SNOI}} \end{cases}$$

$$\Rightarrow \quad s_{\mathrm{SOI}}(n) = \mathbf{w}_{\mathrm{SOI}}^H \mathbf{x}_{\mathrm{ADC}}(n),$$

$$\begin{cases} \mathbf{w}_{\mathrm{SOI}} = \dfrac{\mathbf{P}_\perp(\mathbf{H}_{\mathrm{SNOI}})\mathbf{h}_{\mathrm{SOI}}}{\mathbf{h}_{\mathrm{SOI}}^H \mathbf{P}_\perp(\mathbf{H}_{\mathrm{SNOI}})\mathbf{h}_{\mathrm{SOI}}} \\ \mathbf{P}_\perp(\mathbf{H}_{\mathrm{SNOI}}) \triangleq \mathbf{I}_{M_{\mathrm{feed}}} - \mathbf{H}_{\mathrm{SNOI}}\mathbf{H}_{\mathrm{SNOI}}^\dagger, \quad (\bullet)^\dagger \triangleq \text{pseudoinverse} \end{cases}$$

$$\begin{aligned} \mathbf{w}_{\mathrm{SOI}}^H \mathbf{x}_{\mathrm{ADC}}(n) &= \frac{\mathbf{h}_{\mathrm{SOI}}^H \mathbf{P}_\perp(\mathbf{H}_{\mathrm{SNOI}})}{\mathbf{h}_{\mathrm{SOI}}^H \mathbf{P}_\perp(\mathbf{H}_{\mathrm{SNOI}})\mathbf{h}_{\mathrm{SOI}}} \left(\mathbf{h}_{\mathrm{SOI}} s_{\mathrm{SOI}}(n) + \mathbf{H}_{\mathrm{SNOI}} \mathbf{s}_{\mathrm{SNOI}}(n)\right) \\ &= \left(\frac{\mathbf{h}_{\mathrm{SOI}}^H \mathbf{P}_\perp(\mathbf{H}_{\mathrm{SNOI}})\mathbf{h}_{\mathrm{SOI}}}{\mathbf{h}_{\mathrm{SOI}}^H \mathbf{P}_\perp(\mathbf{H}_{\mathrm{SNOI}})\mathbf{h}_{\mathrm{SOI}}}\right) s_{\mathrm{SOI}}(n) + \left(\frac{\mathbf{h}_{\mathrm{SOI}}^H \mathbf{P}_\perp(\mathbf{H}_{\mathrm{SNOI}})\mathbf{H}_{\mathrm{SNOI}}}{\mathbf{h}_{\mathrm{SOI}}^H \mathbf{P}_\perp(\mathbf{H}_{\mathrm{SNOI}})\mathbf{h}_{\mathrm{SOI}}}\right) \mathbf{s}_{\mathrm{SNOI}}(n) \\ &= s_{\mathrm{SOI}}(n) \end{aligned}$$

Null-space Projection Matrix

- $\mathbf{P}_\perp(\mathbf{H}_{\mathrm{SNOI}})\mathbf{H}_{\mathrm{SNOI}} = 0$
- SNOI components nulled by combiner
- SOI recovered without error if $\mathbf{P}_\perp(\mathbf{H}_{\mathrm{SNOI}})\mathbf{h}_{\mathrm{SOI}} \neq 0$

Copyright © June 2009, Brian G. Agee. All rights reserved.

B³

Linear Interference Excision Solution, Noiseless Environment

$$\mathbf{x}_{\mathrm{ADC}}(n) = \mathbf{h}_{\mathrm{SOI}} s_{\mathrm{SOI}}(n) + \mathbf{H}_{\mathrm{SNOI}} \mathbf{s}_{\mathrm{SNOI}}(n),$$

$$\begin{cases} s_{\mathrm{SOI}}(n) = \text{Sample } n \text{ SOI emission at ADC output} \\ \mathbf{s}_{\mathrm{SNOI}}(n) = L_{\mathrm{SNOI}} \times 1 \text{ sample } n \text{ SNOI emission at ADC output} \\ \mathbf{h}_{\mathrm{SOI}} = M_{\mathrm{feed}} \times 1 \text{ SIMO SOI channel response} \\ \mathbf{H}_{\mathrm{SNOI}} = M_{\mathrm{feed}} \times L_{\mathrm{SNOI}} \text{ MIMO SNOI network response} \\ \mathrm{rank}\{\mathbf{H}_{\mathrm{SNOI}}\} \le L_{\mathrm{SNOI}} \end{cases}$$

$$\Rightarrow \quad s_{\mathrm{SOI}}(n) = \mathbf{w}_{\mathrm{SOI}}^H \mathbf{x}_{\mathrm{ADC}}(n),$$

$$\begin{cases} \mathbf{w}_{\mathrm{SOI}} = \dfrac{\mathbf{P}_\perp(\mathbf{H}_{\mathrm{SNOI}})\mathbf{g}}{\mathbf{h}_{\mathrm{SOI}}^H \mathbf{P}_\perp(\mathbf{H}_{\mathrm{SNOI}})\mathbf{g}} \\ \mathbf{P}_\perp(\mathbf{H}_{\mathrm{SNOI}}) = \mathbf{I}_{M_{\mathrm{feed}}} - \mathbf{H}_{\mathrm{SNOI}} \mathbf{H}_{\mathrm{SNOI}}^\dagger \end{cases}$$

$$\begin{aligned} \mathbf{w}_{\mathrm{SOI}}^H \mathbf{x}_{\mathrm{ADC}}(n) &= \frac{\mathbf{g}^H \mathbf{P}_\perp(\mathbf{H}_{\mathrm{SNOI}})}{\mathbf{g}^H \mathbf{P}_\perp(\mathbf{H}_{\mathrm{SNOI}})\mathbf{h}_{\mathrm{SOI}}} \left(\mathbf{h}_{\mathrm{SOI}} s_{\mathrm{SOI}}(n) + \mathbf{H}_{\mathrm{SNOI}} \mathbf{s}_{\mathrm{SNOI}}(n)\right) \\ &= \left(\frac{\mathbf{g}^H \mathbf{P}_\perp(\mathbf{H}_{\mathrm{SNOI}})\mathbf{h}_{\mathrm{SOI}}}{\mathbf{g}^H \mathbf{P}_\perp(\mathbf{H}_{\mathrm{SNOI}})\mathbf{h}_{\mathrm{SOI}}}\right) s_{\mathrm{SOI}}(n) + \left(\frac{\mathbf{g}^H \mathbf{P}_\perp(\mathbf{H}_{\mathrm{SNOI}})\mathbf{H}_{\mathrm{SNOI}}}{\mathbf{g}^H \mathbf{P}_\perp(\mathbf{H}_{\mathrm{SNOI}})\mathbf{h}_{\mathrm{SOI}}}\right) \mathbf{s}_{\mathrm{SNOI}}(n) \\ &= s_{\mathrm{SOI}}(n) \end{aligned}$$

- $\mathbf{g}$ arbitrary $M_{\mathrm{feed}} \times 1$ vector, $\mathbf{P}_\perp(\mathbf{H}_{\mathrm{SNOI}})\mathbf{g} \neq 0$
- Infinite number of solutions
- $\mathbf{g} \propto \mathbf{h}_{\mathrm{SOI}}$ is minimum-norm solution

Copyright © June 2009, Brian G. Agee. All rights reserved.

Geometric Interpretation ($L_{\text{SNOI}} = 1$, $M_{\text{feed}} = 3$)

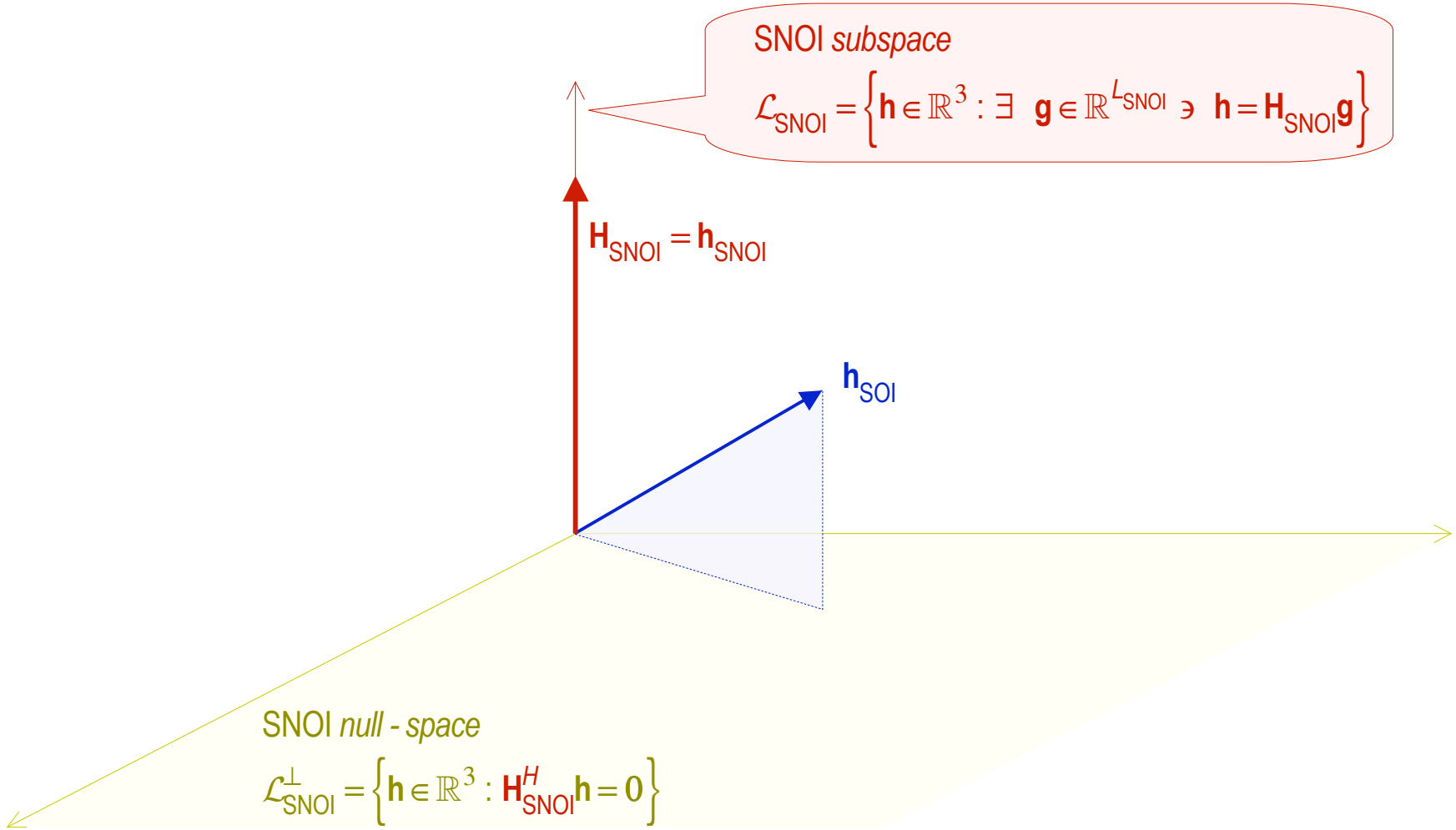

Copyright © June 2009, Brian G. Agee. All rights reserved.

Geometric Interpretation ($L_{\mathrm{SNOI}} = 1$, $M_{\mathrm{feed}} = 3$)

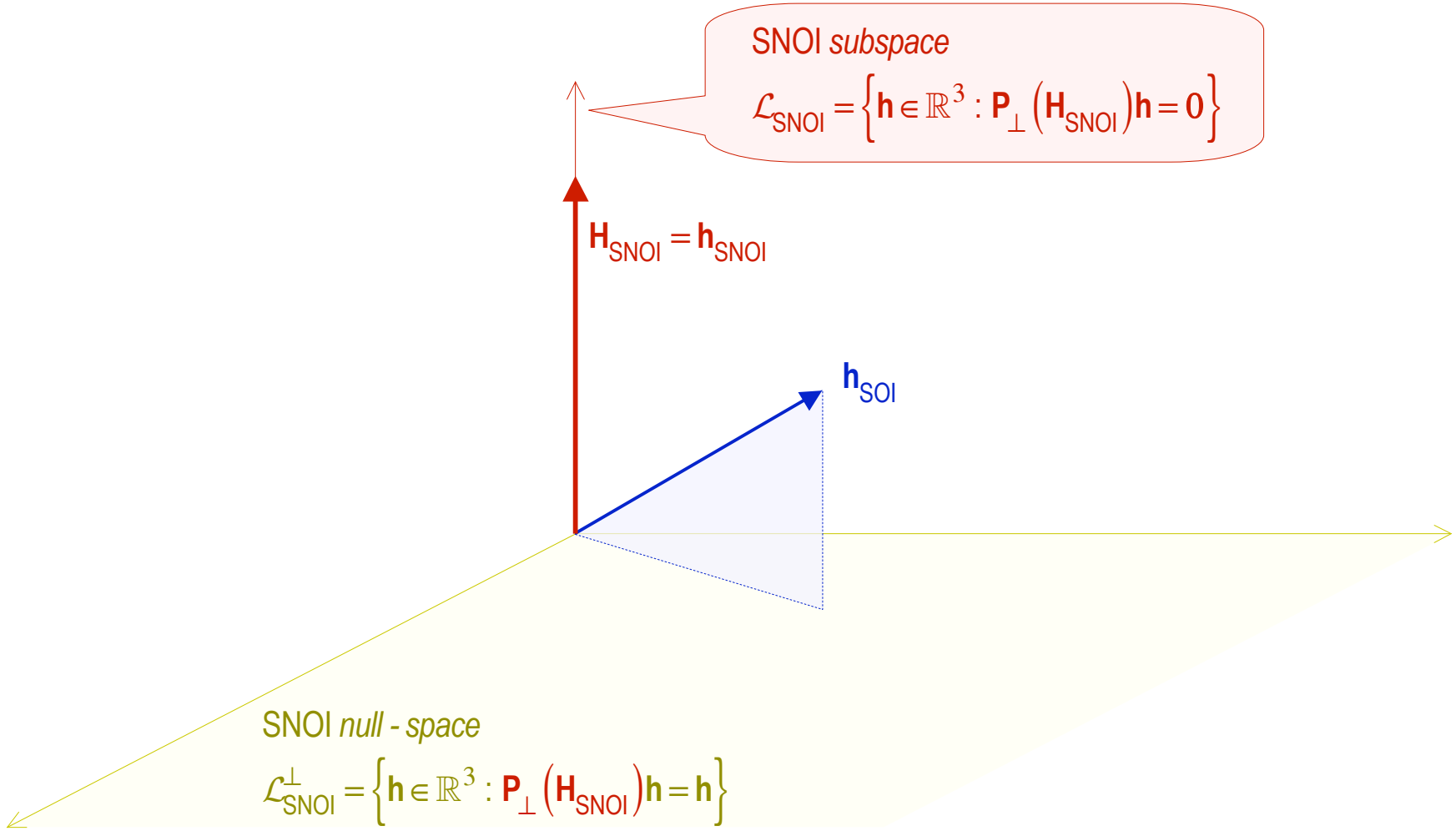

Copyright © June 2009, Brian G. Agee. All rights reserved.

Geometric Interpretation ($L_{\mathrm{SNOI}} = 1$, $M_{\mathrm{feed}} = 3$)

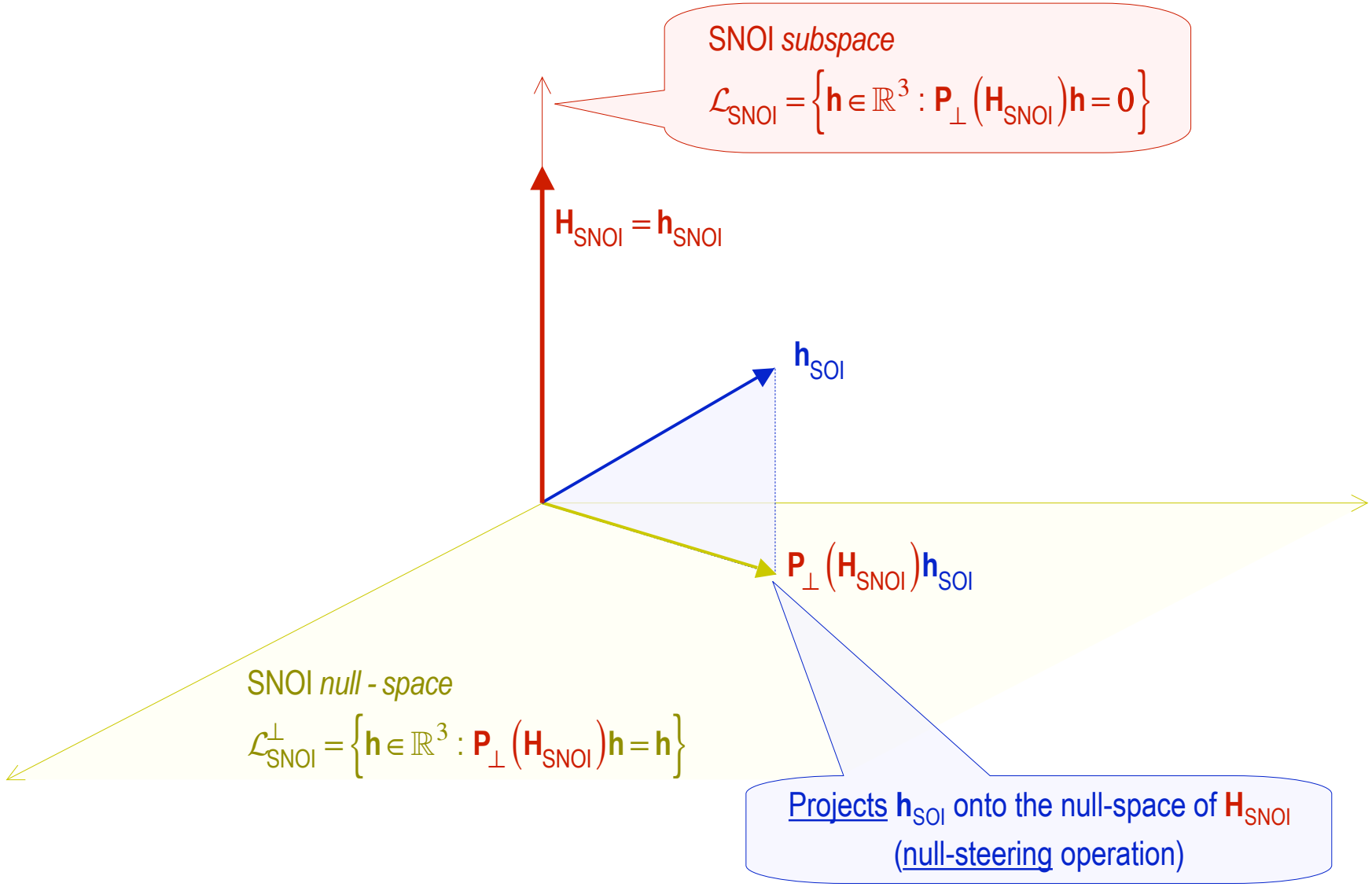

Copyright © June 2009, Brian G. Agee. All rights reserved.

Geometric Interpretation ($L_{\text{SNOI}} = 1$, $M_{\text{feed}} = 3$)

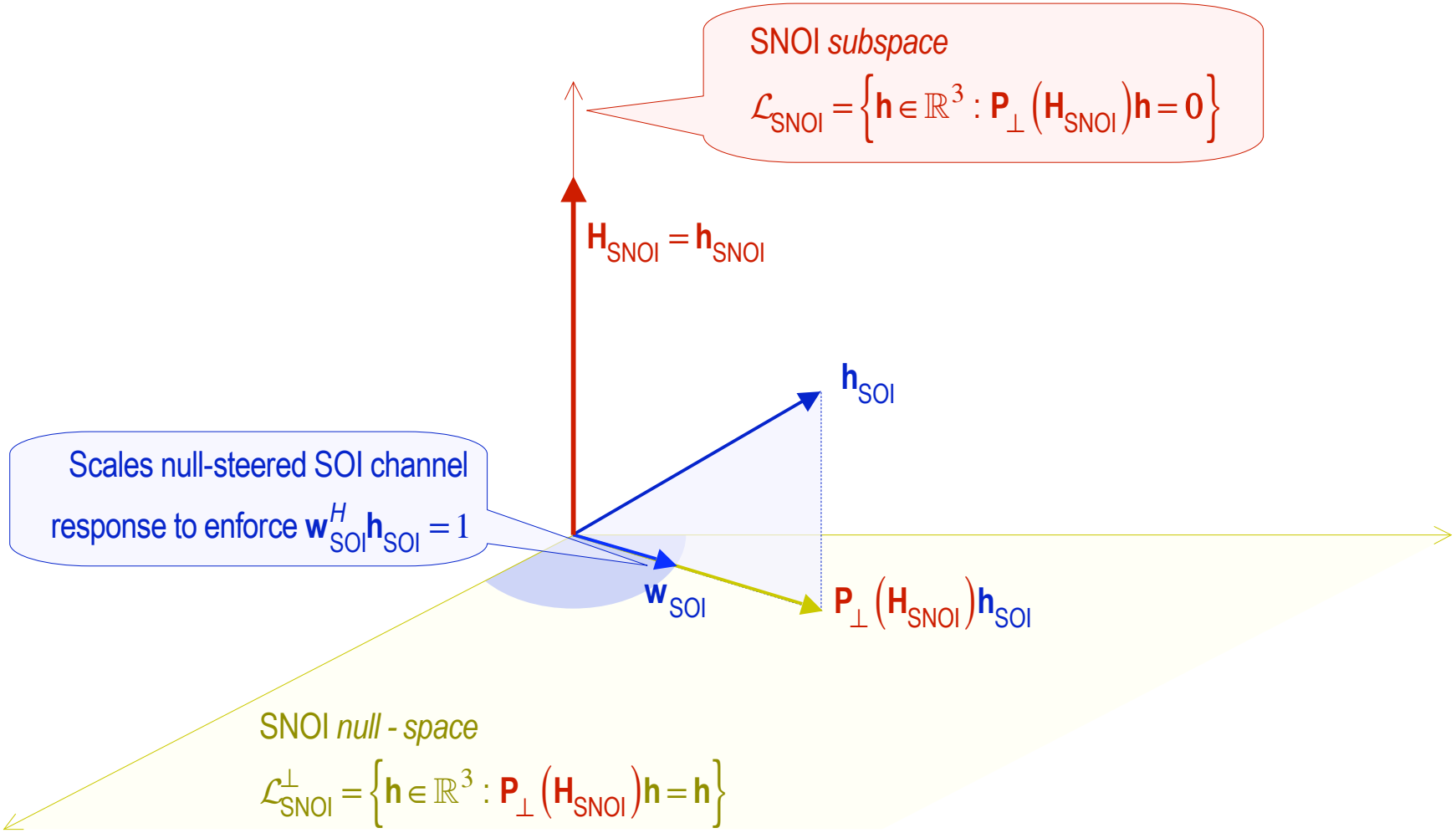

Copyright © June 2009, Brian G. Agee. All rights reserved.

Interpretation for Antenna Array (UCA)

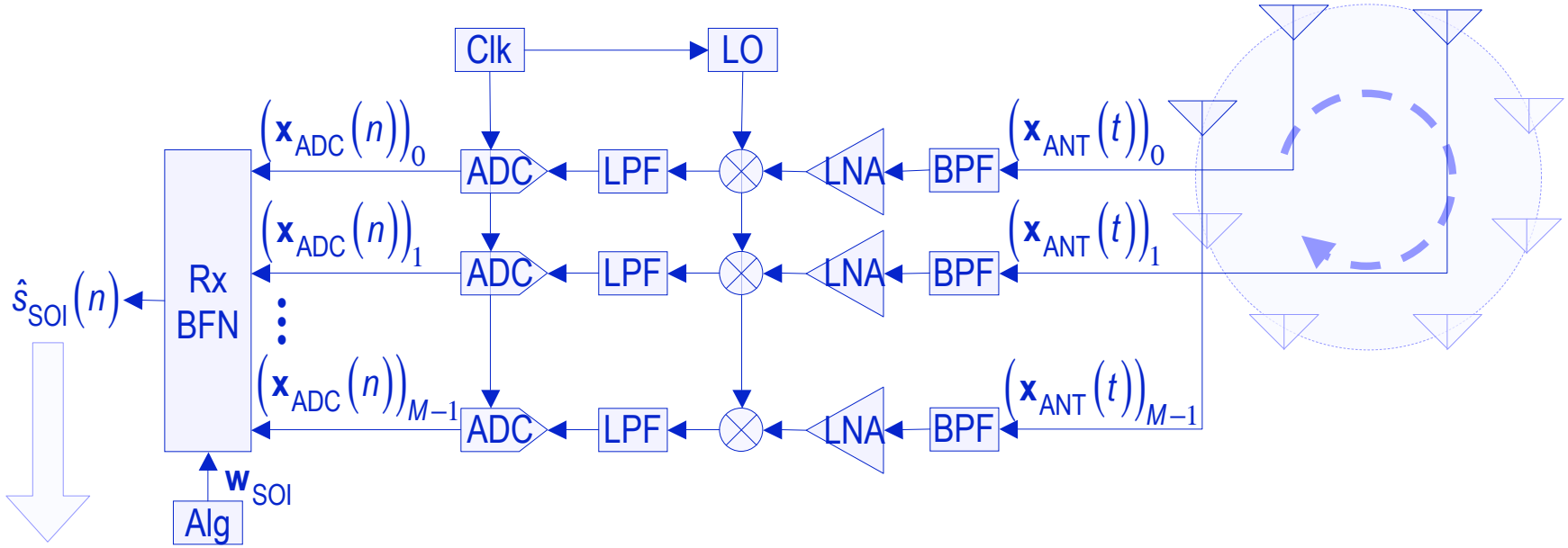

$$\hat{s}_{SOI}(n) = \mathbf{w}_{SOI}^{H}\mathbf{x}_{ADC}(n)$$

Copyright © June 2009, Brian G. Agee. All rights reserved.

B³

Interpretation for Antenna Array (UCA)

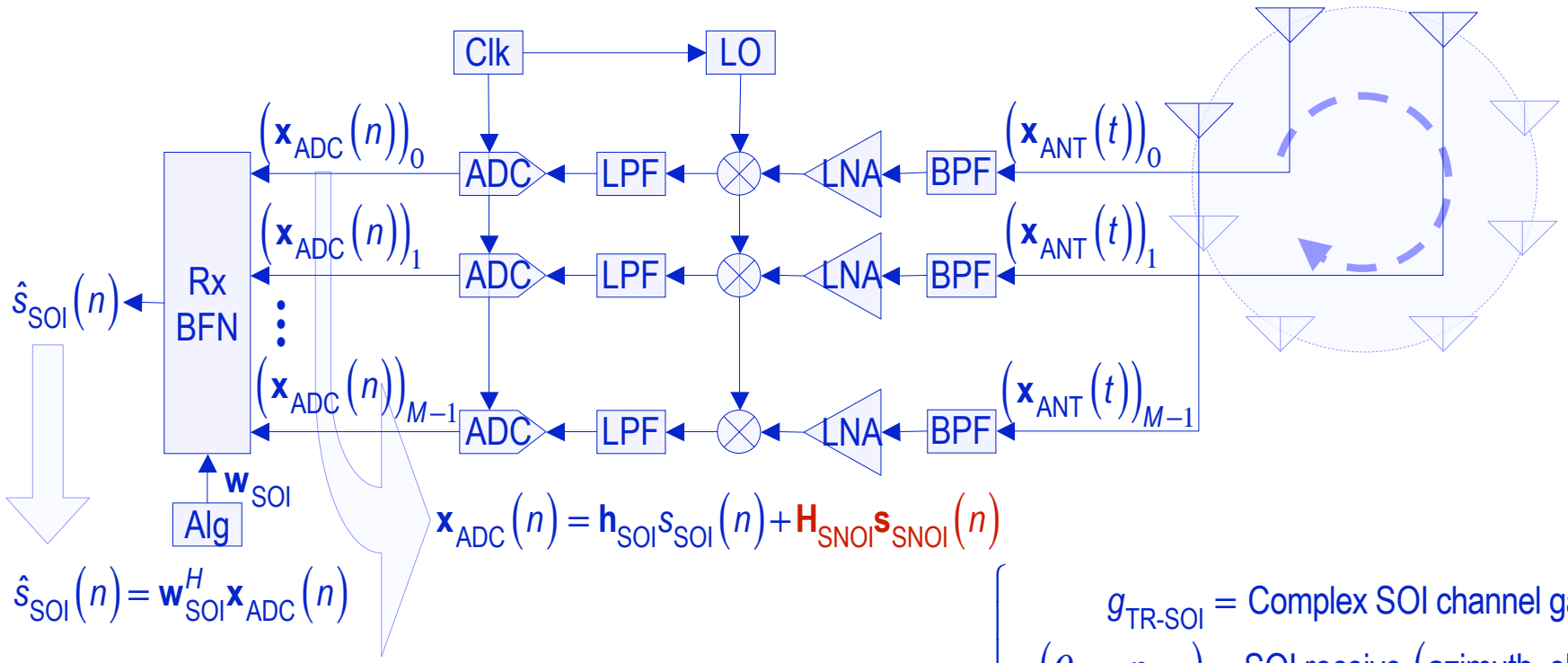

$$\mathbf{x}_{ADC}(n) = \mathbf{h}_{SOI} s_{SOI}(n) + \mathbf{H}_{SNOI}\mathbf{s}_{SNOI}(n)$$

$$\hat{s}_{SOI}(n) = \mathbf{w}_{SOI}^H \mathbf{x}_{ADC}(n)$$

$$\mathbf{h}_{SOI} = g_{TR\text{-}SOI}\mathbf{a}_{ANT}(\theta_{SOI},\varphi_{SOI}),$$

$$\begin{cases} g_{TR\text{-}SOI} = \text{Complex SOI channel gain} \\ (\theta_{SOI},\varphi_{SOI}) = \text{SOI receive (azimuth, elevation)} \\ \{\mathbf{a}_{ANT}(\theta,\varphi)\} \triangleq \text{Receive array manifold} \\ \quad = \mathbf{a}_{ANT}(\mathbf{u}(\theta,\varphi)) \\ \mathbf{u}(\theta,\varphi) = 3\times 1 \text{ direction vector at } (\theta,\varphi) \end{cases}$$

$$\mathbf{H}_{SNOI} = \left[g_{TR\text{-}SNOI}(\ell)\mathbf{a}_{ANT}(\theta_{SNOI}(\ell),\varphi_{SNOI}(\ell)) \right]_{\ell=1}^{L_{SNOI}}$$

Copyright © June 2009, Brian G. Agee. All rights reserved.

B³

Interpretation for Antenna Array (UCA)

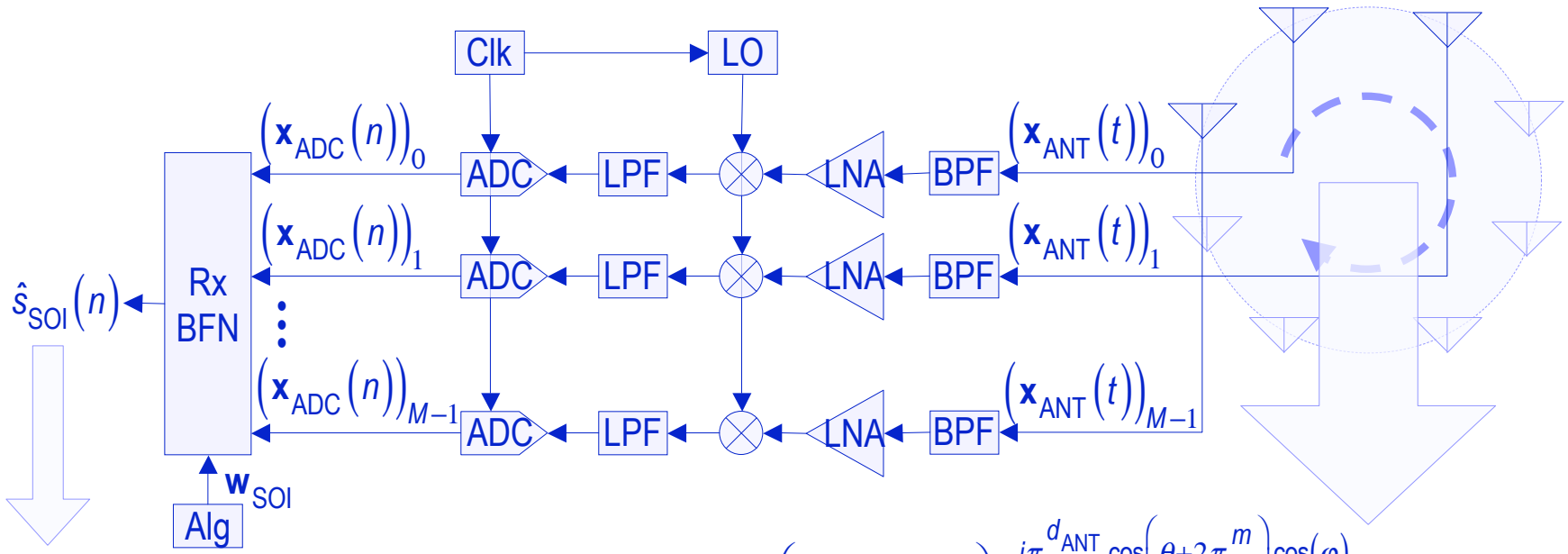

$$\hat{s}_{\mathrm{SOI}}(n) = \mathbf{w}_{\mathrm{SOI}}^H \mathbf{x}_{\mathrm{ADC}}(n)$$

$$\left(\mathbf{a}_{\mathrm{ANT}}(\theta,\varphi)\right)_m = g_{\mathrm{ANT}}\left(\theta + 2\pi\frac{m}{M},\varphi\right) e^{j\pi\frac{d_{\mathrm{ANT}}}{\lambda_{\mathrm{Rx}}}\cos\left(\theta+2\pi\frac{m}{M}\right)\cos(\varphi)}, \quad m = 0,\ldots,M-1$$

$$= \left(\mathbf{a}_{\mathrm{ANT}}\left(\theta + 2\pi\frac{m}{M},\varphi\right)\right)_0 \quad \text{(azimuthally radial symmetry)}$$

$g_{\mathrm{ANT}}(\theta,\varphi) \triangleq$ Array element (voltage) gain, common to each antenna

$d_{\mathrm{ANT}} \triangleq$ Array diameter

$\lambda_{\mathrm{Rx}} \triangleq$ Receive wavelength

Copyright © June 2009, Brian G. Agee. All rights reserved.

B³

Interpretation for Antenna Array (UCA)

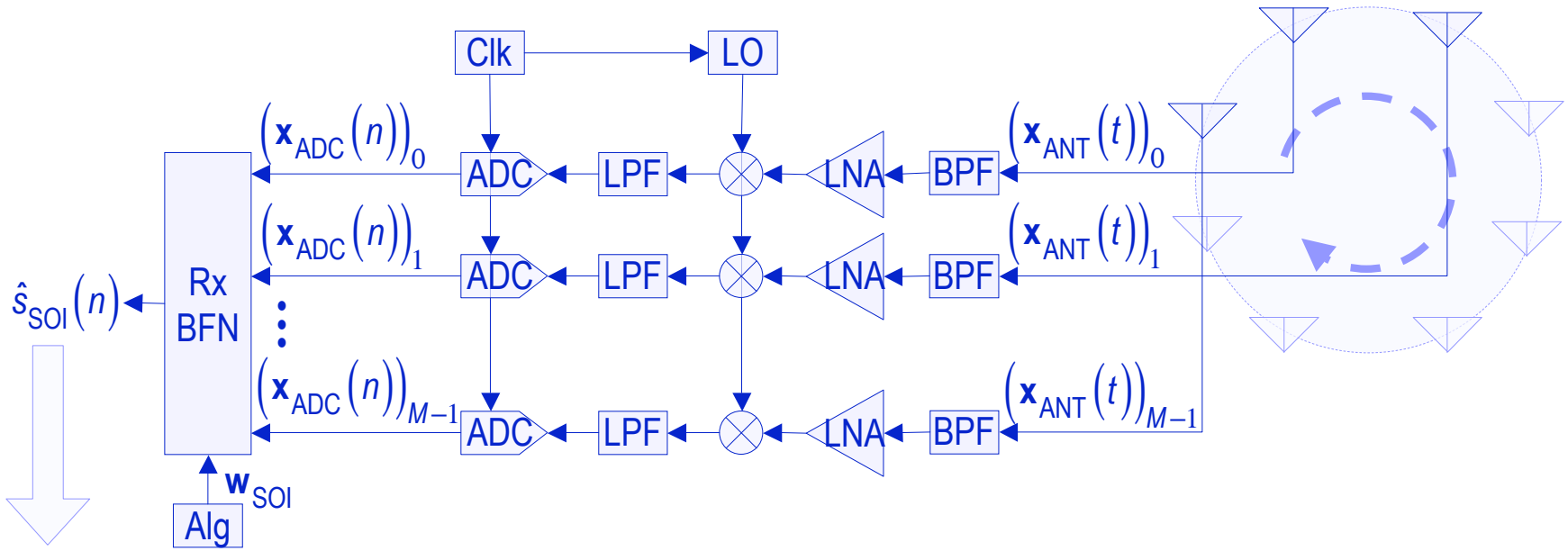

$$\hat{s}_{SOI}(n) = \mathbf{w}_{SOI}^H \mathbf{x}_{ADC}(n)$$

$$= \left(\mathbf{w}_{SOI}^H \mathbf{a}_{ANT}(\theta_{SOI},\varphi_{SOI})\right) g_{TR\text{-}SOI} s_{SOI}(n) + \sum_{\ell=1}^{L_{SNOI}} \left(\mathbf{w}_{SOI}^H \mathbf{a}_{ANT}(\theta_{SNOI}(\ell),\varphi_{SNOI}(\ell))\right) g_{TR\text{-}SNOI}(\ell) s_{SNOI}(n;\ell)$$

$$= g_{SOI}(\theta_{SOI},\varphi_{SOI}) g_{TR\text{-}SOI} s_{SOI}(n) + \sum_{\ell=1}^{L_{SNOI}} g_{SOI}(\theta_{SNOI}(\ell),\varphi_{SNOI}(\ell)) g_{TR\text{-}SNOI}(\ell) s_{SNOI}(n;\ell)$$

$$g_{SOI}(\theta,\varphi) \triangleq \sum_{m=0}^{M-1} w_{SOI}^*(m) \left(\mathbf{a}_{ANT}(\theta,\varphi)\right)_m$$

$$= \textit{Array beamforming (voltage) gain in DOA } (\theta,\varphi)$$

Design $\{w_{SOI}(m)\}$ that yields

$$g_{SOI}(\theta_{SNOI}(\ell),\varphi_{SNOI}(\ell)) \equiv 0$$

Copyright © June 2009, Brian G. Agee. All rights reserved.

B³

Azimuthal UCA Beamforming Gain, Isotropic Antenna Elements

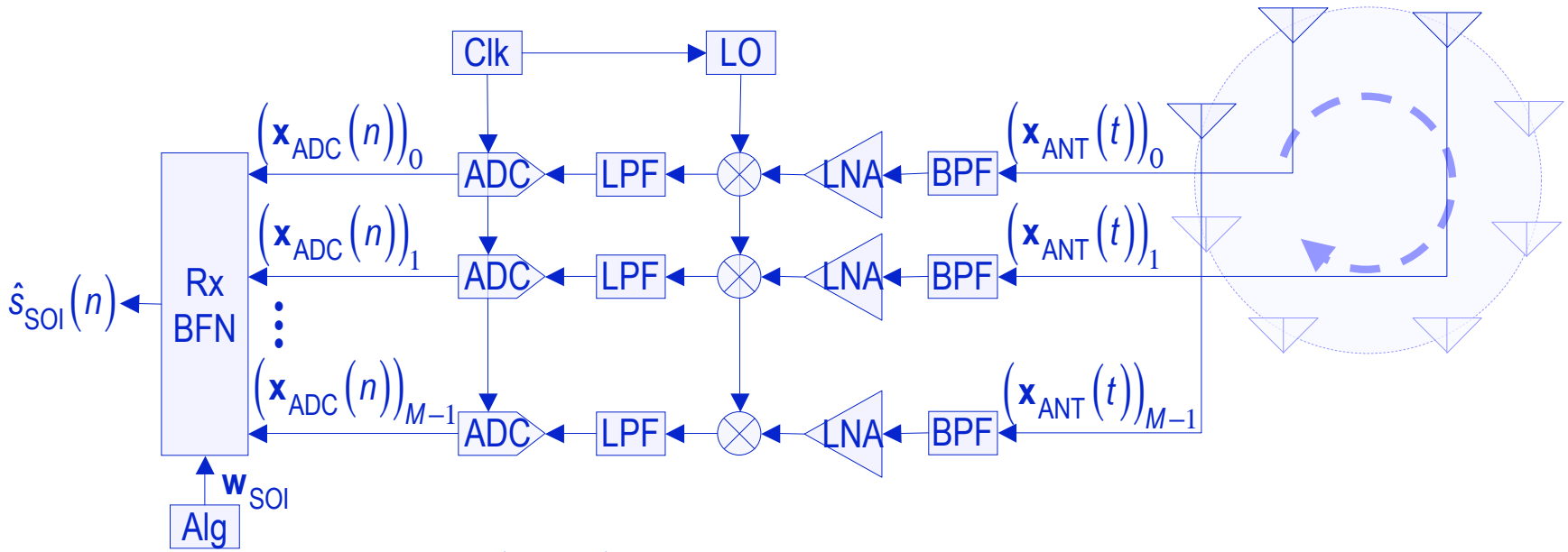

$$g_{\mathrm{SOI}}(\theta) \rightarrow \sum_{m=0}^{M-1} w_{\mathrm{SOI}}^*(m) e^{j\pi \frac{d_{\mathrm{ANT}}}{\lambda_{\mathrm{Rx}}} \cos\left(\theta + 2\pi \frac{m}{M}\right)}$$

$$= \sum_{m=0}^{M-1} w_{\mathrm{SOI}}^*(m) \sum_k J_k\left(\pi d_{\mathrm{ANT}} / \lambda_{\mathrm{Rx}}\right) e^{jk\left(\theta + 2\pi \frac{m}{M}\right)}$$

$$= \sum_k J_k\left(\pi d_{\mathrm{ANT}} / \lambda_{\mathrm{Rx}}\right) \left(\sum_{m=0}^{M-1} w_{\mathrm{SOI}}(m) e^{-j2\pi km/M} \right)^* e^{jk\theta}$$

$$= \sum_k c_{\mathrm{SOI}}(k) e^{jk\theta}$$

$$c_{\mathrm{SOI}}(k) \triangleq J_k\left(\pi d_{\mathrm{ANT}} / \lambda_{\mathrm{Rx}}\right) W_{\mathrm{SOI}}^*\left(e^{-j2\pi k/M}\right)$$

Design $\left\{c_{\mathrm{SOI}}(k)\right\}$ such that

$C_{\mathrm{SOI}}(z)$ has roots at $\left\{e^{j\theta_{\mathrm{SNOI}}(\ell)}\right\}$

Copyright © June 2009, Brian G. Agee. All rights reserved.

Extreme Excision Example: 270 dB SOI/SNOI Interference Margin

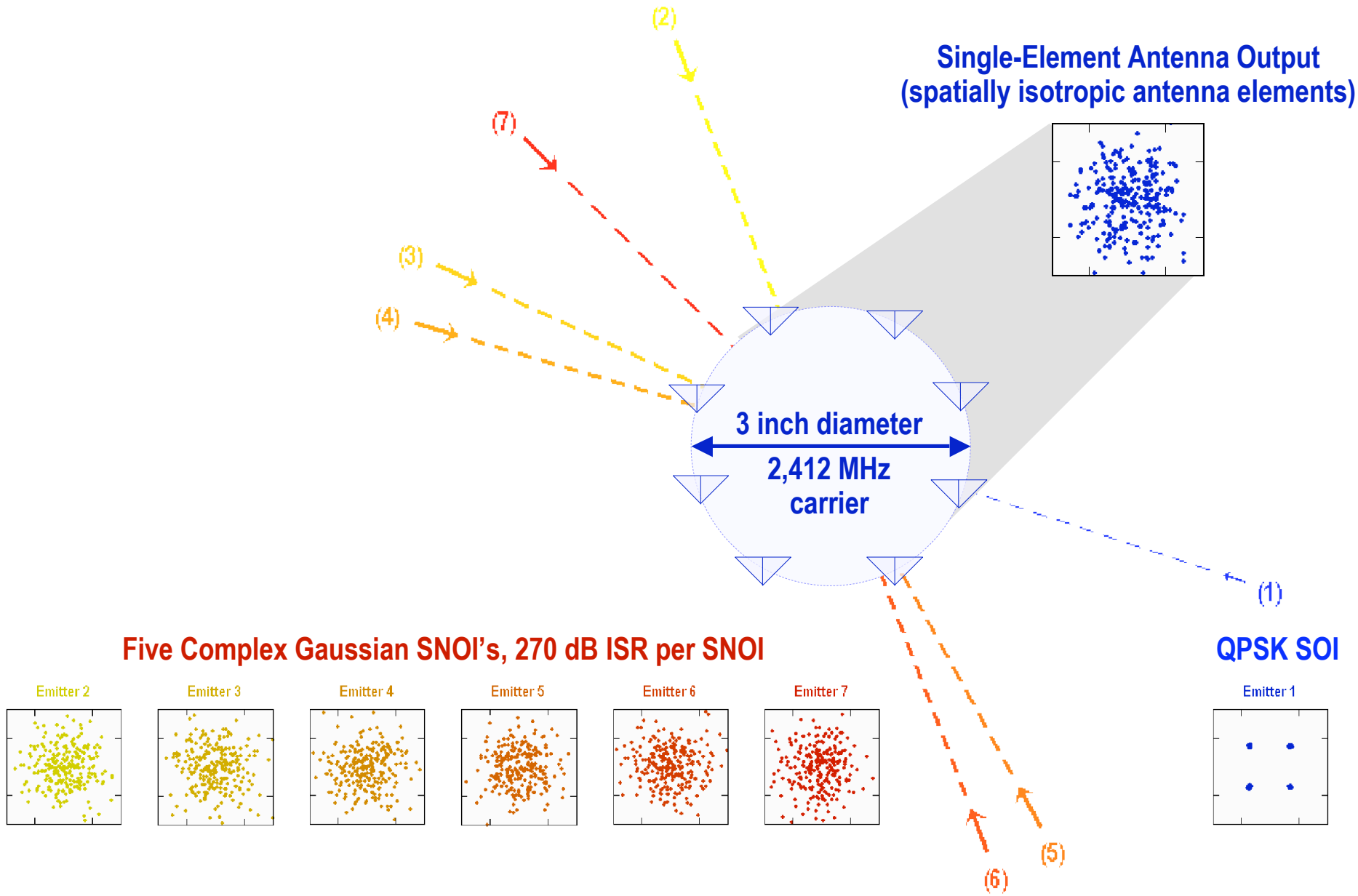

Copyright © June 2009, Brian G. Agee. All rights reserved.

Maximum-Ratio Combiner Solution

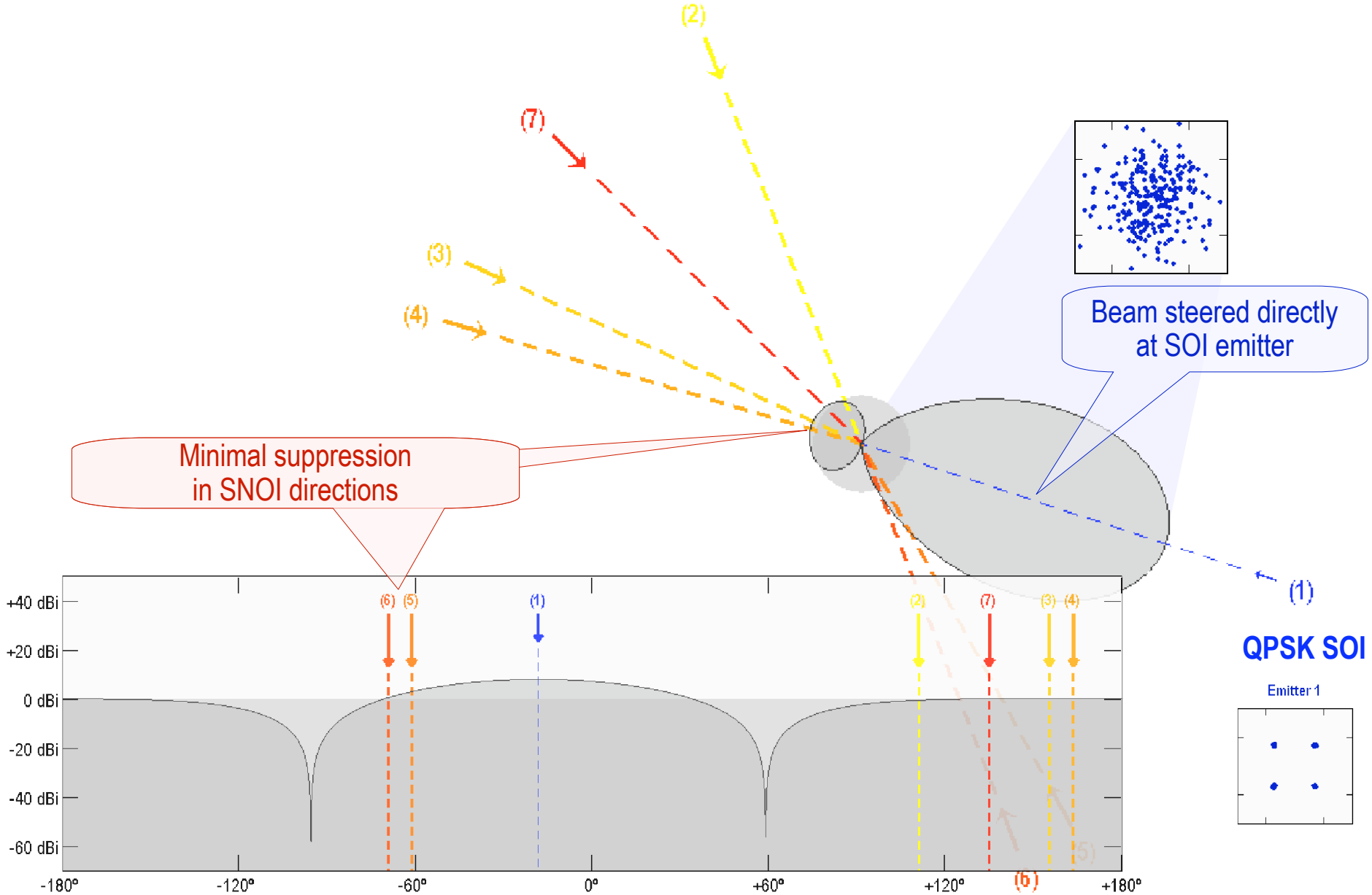

Copyright © June 2009, Brian G. Agee. All rights reserved.

Minimum-Norm Null-Steerer

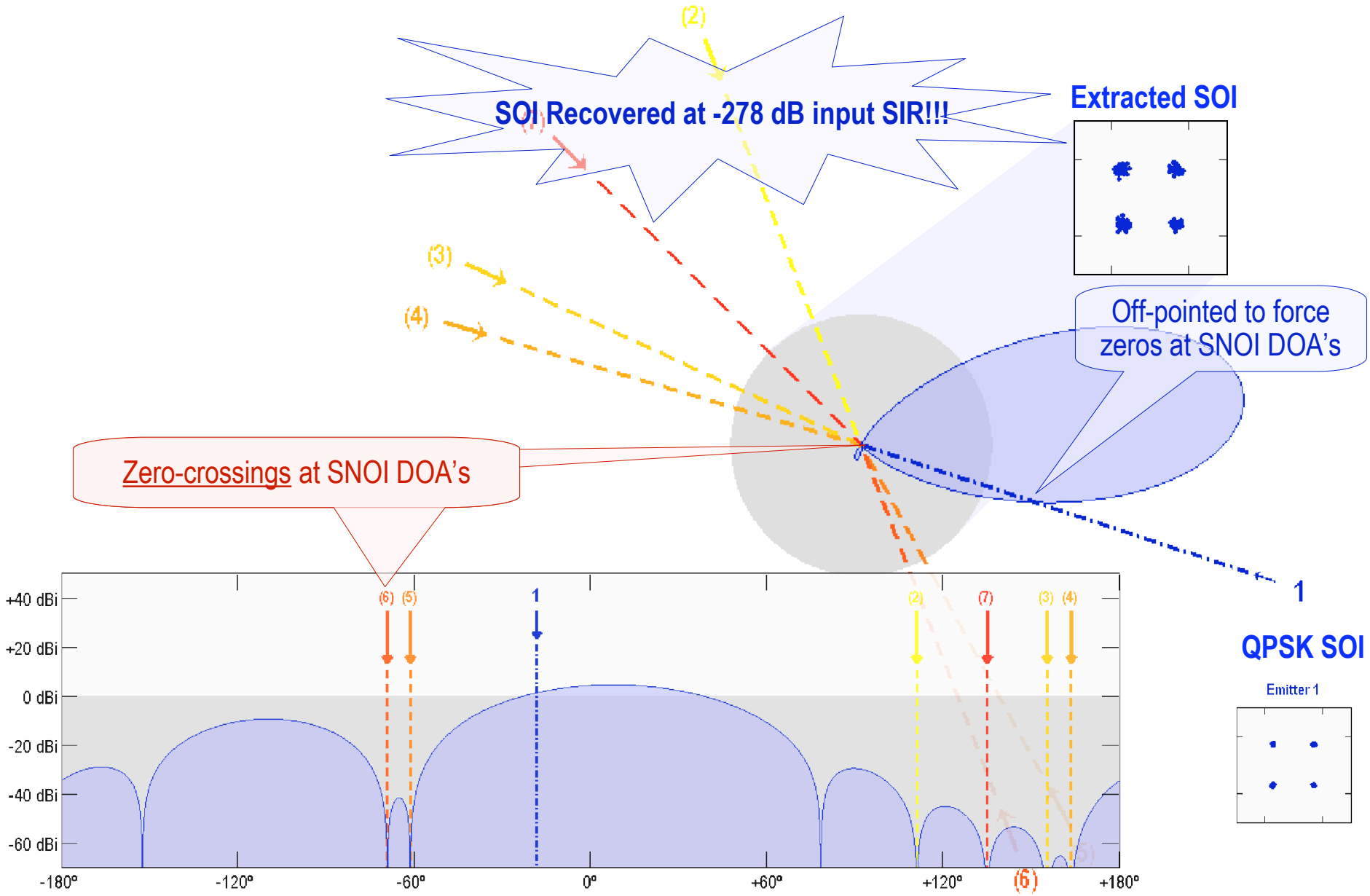

Copyright © June 2009, Brian G. Agee. All rights reserved.

B3

Minimum-Norm Null-Steerer

Don't try this at home!
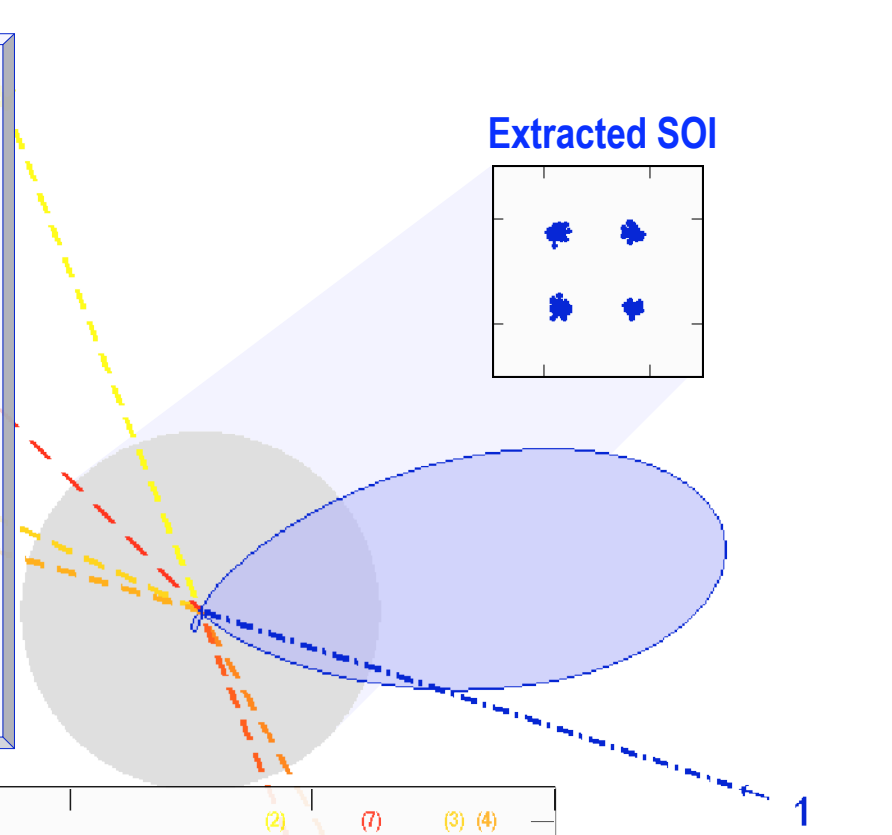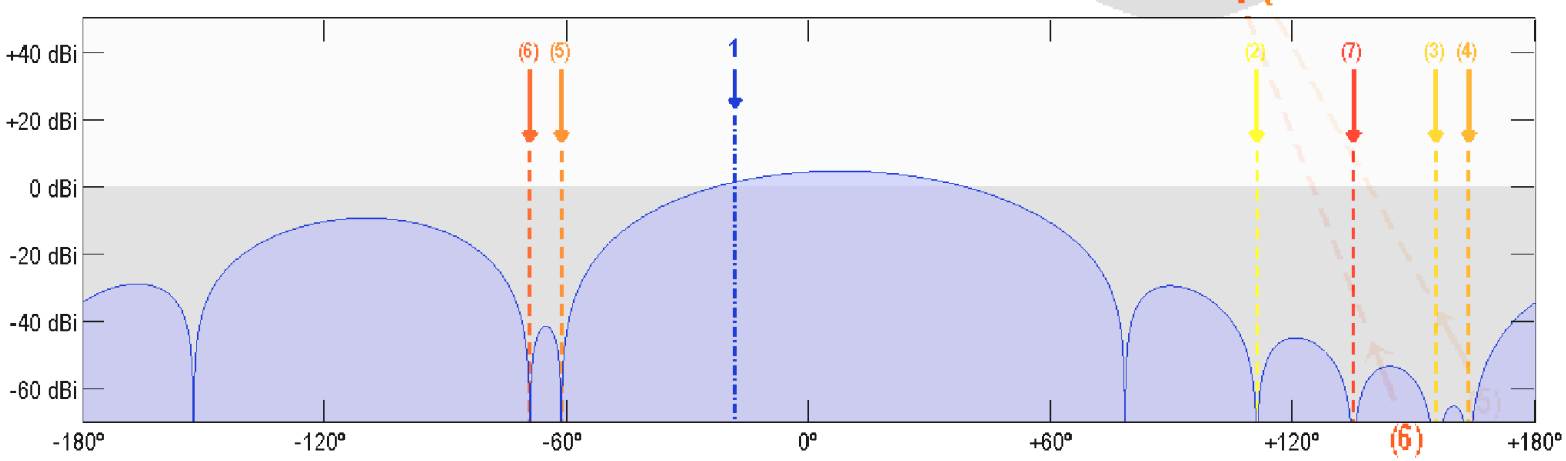
- Demonstration of the ultimate power of the approach
- Requires model to hold exactly
  - Constellation imperfect even in this example, due to precision of computer/algorithms!
- Numerous real-world implementation issues
  - Receiver noise, nonlinearity
  - Cross-sensor filter mismatches
  - ADC, digital processing precision
  - Channel and platform dynamics
- Designing system to provide just the needed amount of excision the most important part of the process