THE IRIDIUM™ SPACE SEGMENT

1.0 SPACE SEGMENT OVERVIEW

The space segment of the IRIDIUM™ system includes a constellation of 77 small space vehicles (SVs or satellites) in low-earth orbit which are networked together as a switched digital communications system. The 77 SVs are deployed in seven orbital planes with eleven SVs per plane. Each SV will utilize up to 37 separate spot-beams to form L-band cells on the surface of the earth as shown in Figure 1-1, 37-cell pattern. The spot beams form a continuous hexagonal pattern with one center spot beam surrounded by three rings of equally-sized beams. The three rings consist of 6, 12, and 18 spot beams, respectively. Each of the 37 spot beams is created such that they are approximately the same shape and size (372 nautical miles in diameter), and combine to cover a circular area with a diameter of 2,200 nautical miles for each SV. Each SV is in view by a single ISU for approximately nine minutes.

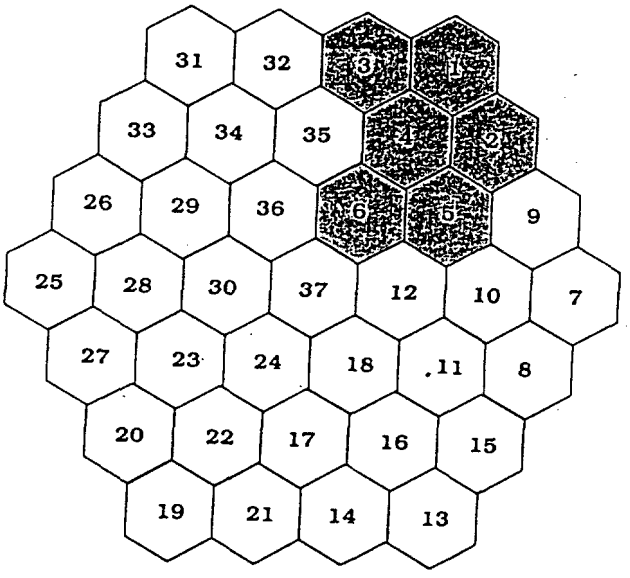

Figure 1-1: 37-Cell Pattern

Each SV has six multiple beam phased array antennas plus one fixed beam cupped dipole antenna. The phased array antennas are located on the side panels of the hexagonal SV, each of which forms six cellular beams. The fixed beam antenna is located on the bottom of the SV and forms a single cellular beam in the nadir direction. The six cell pattern of each phased array (beam types 1-6) is repeated for each of the six panels.

The constellation of SVs and its projection of cells is somewhat analogous to the cell structure of a cellular telephone system. However, the IRIDIUM™ system's users move at a slow pace relative to the SV, so the users appear static while the cells move. As each SV moves near the poles, the outermost spot beams are disabled to eliminate unnecessary overlap with beams from adjacent SVs.

Each SV operates crosslinks as a medium used to support internetting. These crosslinks operate in the Ka-band and include both forward and backward looking links to the two adjacent SVs in the same orbital plane which are nominally at a fixed angle and 2,173 nautical miles away. Up to 4 inter-plane crosslinks are also maintained and these links vary in angle and distance from the SV with a maximum distance of 2,200 nautical miles. Crosslink beams never intercept the earth.

Each SV can communicate with earth-based gateways either directly or through other SVs by means of the crosslink network. The initial system is sized to handle the expected demand plus some margin for the end of this decade; however, the IRIDIUM™ system allows for capacity growth in subsequent years as the need arises.

The IRIDIUM™ system is designed to meet the technical requirements set forth in the international Radio Regulations and the applicable provisions of Part 25 of the Commission's Rules and Regulations. The system design also is fully compatible with all compliant Radio Determination Satellite Service (RDSS) systems, the radio astronomy community and GLONASS. The major SV characteristics are shown in Table 1-1.

Table 1-1: MAJOR IRIDIUM™ SATELLITE CHARACTERISTICS

Stabilization	3-Axis
Mission Life	5 Years
Station Keeping	+/- 0.5 Degrees Attitude Accuracy +/- 20 Kilometers Position Accuracy
Frequency Bands: L-band Uplink & Downlink	1610-1626.5 MHz
Ka-band Downlink	18.8-20.2 GHz
Ka-band Uplink	27.5-30.0 GHz
Ka-band Crosslink	22.55-23.55 GHz
Earth Coverage	5 Million Square Miles Per Satellite
Max. No. of Uplink Channels per Satellite	110 per Cell Averaged Over 37 Cells
Max. No. of Downlink Channels per Satellite	110 per Cell Averaged Over 37 Cells
Number Intersatellite Channels per Satellite	3,000 Maximum
Number Gateway Channels per Satellite	2,000 Maximum
Total Occupied Bandwidth	16.5 MHz @ L-band 200 MHz @ Ka-band (crosslinks) 100 MHz @ Ka-band (gateway uplink)
Polarization	Right Circular 100 MHz @ Ka-band (gateway downlink) @ L-band & Ka-band (Gateway and TT&C links) Vertical @ Ka-band (Intersatellite links)
Transmit EIRP	12.3 to 31.7 dBw @ L-band 15.1 to 28.1 dBw @ Ka-band (Gateway) 39.6 dBw max @ Ka-band (Intersatellite)
Satellite G/T	-5.1 to -19.2 dBi/K @ L-band -10.1 dBi/K @ Ka-band (Gateway) 4.0 to 6.2 dBi/K @ Ka-band (Intersatellite)
Wet Mass with Reserve	386.2 kg.
Orbit	Polar (7 planes)

The IRIDIUM™ system operates with a 7-cell frequency reuse pattern. The cells are scanned by the SV antenna arrays in accordance with the predefined timing pattern and sequence. During the time slot that the antenna is pointing at a cell, satellite transmissions may be made and receptions of

transmissions from ISUs may occur. As the SVs move toward a pole, the distance between SVs in adjacent planes decreases. This causes antenna patterns to overlap. As the cell patterns begin to overlap, selected spot beam antennas are deactivated to permit an orderly reconstitution of the frequency reuse pattern. This synchronized control of the cells is defined as cell management.

2.0 COMMUNICATIONS SUBSYSTEM

The IRIDIUM™ communications system provides L-band links between each SV and individual IRIDIUM™ subscriber units (ISUs), Ka-band communications between each SV and ground-based facilities (either gateway or System Control Segment, SCS), and Ka-band crosslinks from SV to SV. The transfer of Telemetry, Tracking, and Control (TT&C) information between the SCS and each SV is generally provided via the Ka-band communications links, with omni antenna as a backup. Figure 2-1 is a top-level block diagram for the communications subsystem.

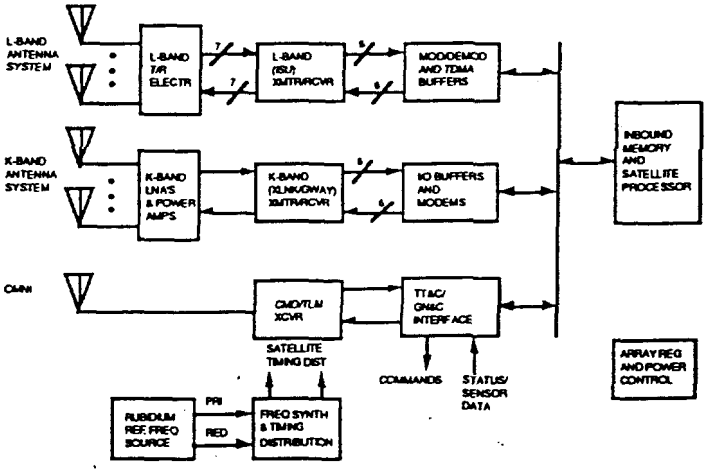

Figure 2-1: Top-Level Block Diagram for the Communications Subsystem

2.1 L-Band subscriber Terminal Links

The L-band antenna consists of seven antenna panels which form 37 cellular beams. Each active receive beam supports up to 87 traffic channels spaced at 160 KHz intervals. Each active transmit beam supports up to 45 traffic channels, using a 2.2:1 DSI voice activity compression ratio on the downlink.

The L-band communications subsystem is designed to support bit error rates of less than 10^{-2} end-to-end for voice. The lower bit error rates required for data transfers will be supported through the use of processing hardware installed at the ISUs to apply more robust protocols and coding in order to counter the fades experienced in the L-band links.

2.2 Intersatellite Crosslinks

Each SV will communicate and route network traffic to the two SVs of the adjacent orbital planes that are fore and aft of the subject SV. The cross-plane antennas are optimized to provide a five (5) degree elevation beamwidth so that mechanical scanning is required in only the azimuth direction. In addition, two separate fixed waveguide slot arrays pointing in forward and aft directions are used for the in-plane links. The gain of each of these antennas is approximately 36 dBi. Each of the four crosslinks supports 600 simultaneous circuits for an effective capacity of 1300 voice channels assuming the 2.2:1 DSI factor.

These four crosslinks provide both direct and practical routing between users throughout the world. They also provide a substantial redundancy that can continue to support traffic flow in the event of degradation to one of the SVs. The frequency plan for these crosslinks requires the allocation of eight distinct center frequencies for crosslink communications in order to support all necessary SV-to-SV communications on a non-interfering basis. The burst data rate for each link is 25 Mbps and the channels are spaced at 25 MHz intervals. Each Ka-band crosslink is designed to support a bit error rate of less than 10^{-7} using rate 1/2 forward error correction (FEC) coding.

2.3 Gateway Links

The Ka-band gateway links support simultaneous communications with multiple ground-based gateways (or SCS) per SV. The antenna elements for the gateway subsystem are located on the nadir panel of the SV. Satellite beam-center gains for maximum range are 18.0 dBi on the downlink and 21.5 dBi on the uplink. The transmission links are designed to function even during rainfalls that attenuate the signal by up to 13 dB in the downlink and up to 26 dB in the uplink. Multiple antennas separated by up to 34 nautical miles provide spatial diversity which avoids sun interference and helps mitigate rain attenuation.

Each of the full-duplex gateway links support up to 600 simultaneous circuits for an effective capacity of 1300 voice channels assuming the 2.2:1 DSI factor. The frequency plan requires the allocation of six distinct center frequencies each for uplink and downlink gateway links. The modulation rate in each direction is 12.5 Mbps and the channels are spaced at 15 MHz intervals.Each link is designed to support a bit error rate of less than 10^{-7} using 1/2 rate FEC coding.

2.4 Transmission and Modulation Characteristics

The IRIDIUM™ system has been designed to provide RDSS plus voice and data services using digital transmission in a combined time and frequency division multiplexing scheme. Voice is provided by the transmission of the output of a VSELP 4800 BPS voice coder. Each information packet will be protected from errors with a combination of forward error correction and error detection which increase the information bit rate of 4800 bits per second to a link transmission rate of about 8500 bits per second.

The modulation and multiple access techniques used in the IRIDIUM™ system resemble those of a terrestrial cellular system, especially the newer digital cellular systems (e.g., GSM, U.S. Digital Cellular, etc.). A combined frequency division and time division multiple access format is used along with data or vocoded voice and digital modulation techniques.

Each subscriber unit operates in a burst mode using a single carrier transmission. The bursts are controlled to occur at the proper time in the TDMA frame.The TDMA frame having fourteen time slots is shown in Figure 2-2. This overall scheme has been chosen to maximize frequency reuse, minimize spectrum requirements, maximize the possibility of sharing spectrum, and minimize the complexity of the designs of all nodes in the system.

The system will use differentially encoded, raised cosine filtered, quadrature phase shift keyed ("QPSK") modulation. This specific format has been chosen as the best compromise for the transmission channel between the SVs and the earth which may experience a combination of multipath fading and transmission impairments (shadowing) due to natural vegetation.

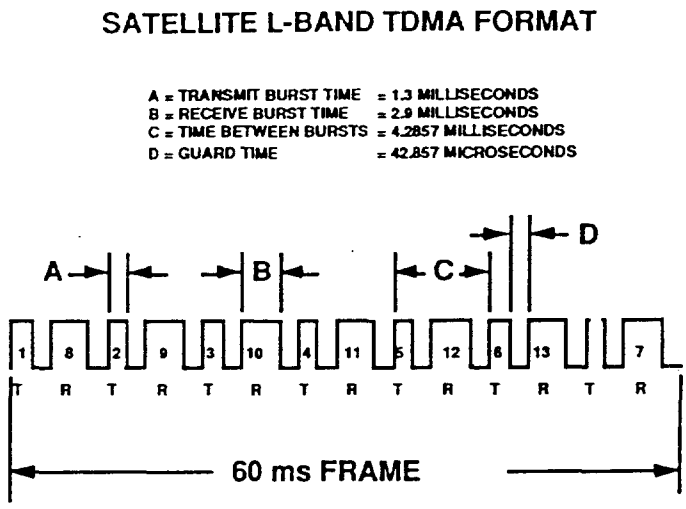

Figure 2-2: The TDMA Frame

3.0 TELEMETRY, TRACKING, AND CONTROL SUBSYSTEM

The Telemetry, Tracking, and Control ("TT&C") subsystem provides the functional hardware and software required for the reception, processing and implementation of command data, and the collection, storing, multiplexing, and transmission of SV telemetry data. Functional hardware redundancy will be used to ensure reliability and preclude single point failures of the TT&C subsystem.

TT&C data normally are multiplexed into the wideband 20/30 GHz groundlink or the crosslink transmissions during on-station operations. During transfer orbit operations the TT&C capability is provided by transmission over independent narrowband channels at the same 20/30 GHz carrier frequencies. These narrowband channels use omnidirectional spacecraft antennas to permit direct communications with a SCS regardless of the SV attitude. These antennas are linearly polarized.This link supports control and data communication during pre-orbit operations, de-orbit procedures, or during emergency or "lost bird" conditions where the SV is not earth-locked. When the narrowband transmission mode is in operation, all of the TT&C data and control signals are transmitted in digital form at a rate of 1.0 kbps each. The TT&C SV transmission characteristics are summarized in Table 3-1.

Table 3-1: TT&C SATELLITE TRANSMISSION CHARACTERISTICS

	TRANSFER ORBIT (Omni Antenna)	ON-STATION COMMUNICATIONS NETWORK
Frequency/ Polarization	18.8-20.2 GHz/ Linear	18.8-20.2 GHz/ RHC (Gateway/SCS)
EIRP	9.5 dBW max.	(Uses Gateway link or Crosslink)
Modes of Operation	Sequential data, Selected data	Sequential data,Selected data
Modulation	FSK	QPSK
Data Rate	1 kbps	12.5/25 mbps (total Gateway link/Crosslink data rate)

4.0 AUTONOMOUS NAVIGATION AND CONTROL SUBSYSTEM

The IRIDIUM™ system's autonomous Navigation and Control subsystem is configured as a three axis bias momentum system. Primary attitude control of the SV is achieved by the gyroscopic effects of a single Pitch Axis momentum wheel. The design uses the momentum of a high speed, single degree of freedom wheel to provide inherent attitude stability. Magnetic torquing and wheel speed control will be utilized for attitude error correction. The primary sensors will be a pair of Barnes Engineering Dual Cone Scanners implemented for the MANS (Microcosm Autonomous Navigation System) to provide infrared sensing of the earth and visible sensing of the Moon and Sun.

The system will be fully autonomous with ground control backup capability after the SV is placed in its final orbit and initially attitude stabilized. The inherent gyroscopic stability of the wheel provides stable attitude control and reliable reacquisition in the event of a sensor failure or control anomaly. The autonomous Navigation and Control subsystem is utilized to perform the following functions:

Parking Orbit: Determines altitude and position. The momentum wheel, torquers and small thrusters are used to establish and maintain three-axis stability during the parking orbit. SV position is reported via telemetry to the ground control.

Mission Orbit: Maintains control during deployment and mission operation. Stationkeeping can be performed autonomously or in conjunction with ground commands.

The Momentum Wheel Assembly provides gyroscopic stability of the wheel axis which is aligned to the SV Pitch axis in inertial space. Control of the Pitch Axis to maintain nadir pointing is achieved by wheel speed control to exchange momentum with the SV. Roll and yaw errors are both controlled utilizing magnetic torquing. The Barnes sensor utilizes earth, sun, and moon sensing to develop the required error signals. Both roll and yaw errors are corrected in response to a roll error signal. A Rubidium clock is also required as part of the system to provide an accurate time reference.

5.0 PROPULSION SUBSYSTEM

The SV uses a monopropellant hydrazine subsystem to provide all propulsive functions. This subsystem applies external torques and forces to the SV to perform the functions of orbit insertion, orbit adjustment, maintenance, reaction control, and de-orbit. The principle components of the subsystem include propellant storage pressure vessels, catalytic thrusters, solenoid, manual, and pyrotechnically actuated valves, plumbing, and telemetry instrumentation to evaluate the in-flight performance of the subsystem.

The propulsion subsystem includes a propellant load and thrusters capable of providing the delta-velocity increment required to insert the SV into the designated orbital slot and positively de-orbit the SV at end-of-life. The on-orbit functions of the subsystem include altitude, mean longitude, and orbit inclination maintenance for the duration of the operational life. The on-orbit propellant load has been sized to provide a 60% consumable reserve for on-orbit functions.

6.0 ELECTRICAL POWER SUBSYSTEM

The Electrical Power subsystem ("EPS") provides power to the SV electrical loads over the expected lifetime. The bus voltage varies from 22 to 36 volts and is converted to required equipment voltages by power converters located at the loads.

The subsystem includes the following major elements: (a) A high output photovoltaic solar array, (b) Long life nickel hydrogen secondary batteries, (c) Fault isolating power distribution system,

and (d) Redundant bus regulation and battery charging controls. The EPS contains fault protection features which automatically respond to subsystem malfunction or to excessive main bus loads. All power subsystem automatic function can be overridden in response to ground commands.

The solar array consists of 18 sun oriented planar panels with 9 panes per wing. Each wing is attached to a deployed astromast by a Graphite Fiber Reinforced Plastic ("GFRP") boom. During transfer orbit, the panels are folded and stowed by a single wrap-around cable against the SV body. During this time, the outermost panels are periodically illuminated by the sun and will aid in providing power to housekeeping loads. When the SV reaches its operation orbit, the array is deployed and full power will be available.

The following mechanisms are used to deploy the solar array: (a) Multipoint solar panel support during launch by restraint from a single wrap-around cable, (b) Cable release provided by redundant pyro-activated cable cutter, and (c) Deployment sequenced using simple thermo-motorized hinges.

Stepper motor drives are used for sun tracking. Two seasonal drives (one per wing) and a common orbital drive provide rotation of both wings about the deployed mast. Power from the rotating array is transferred to the main bus by slip rings. Each wing is independently oriented by redundant stepper motors.The design incorporates high efficiency GaAs/Ge solar cells on a lightweight GFRP substrate for minimum size and weight.

One 48 amp-hour nickel hydrogen battery will comprise the battery system. Battery charge current will be controlled by adjusting the peak power tracker based on amp hour integration processed within the on board computer, with temperature backup controls within the Power Control Unit. The battery consists of 22 cells allowing for a single cell failure. The battery system will be sized to provide all housekeeping loads during eclipse plus some capability for communications. Table 6-1 illustrates the power budget.

Table 6-1: POWER BUDGET

SUBSYSTEM	EOL (5 yrs, avg pwr)
Communications	
Electronics	433
Ka-band Power amp (PA)	21
L-band Power amp (PA)	232 (battery supplied)
Attitude Control	50
Telemetry, Tracking, and Command	20
Electrical Power and Distribution	75
Thermal Control	20
Battery Charge	750
TOTAL LOAD	1369 (excluding L-band PA)
Panel Capability	1429 watts
Margin (%)	60 watts (4%)

7.0 SATELLITE PHYSICAL DESCRIPTION

The SV will be three-axis stabilized. The structure will be capable of supporting the mass, volume, and heat dissipation requirements of the SV as well as providing the required support and rigidity during all phases of launch, transfer and orbit insertion. The SV mass budget is shown in Table 7-1.

Table 7-1: PRELIMINARY SV MASS BUDGET

SUBSYSTEM	MASS (kg)
Structure	24.9
Thermal Control Subsystem	12.1
Propulsion (Dry)	8.6
GN&C Subsystem	9.8
Electrical Power Subsystem	78.9
Antenna Subsystem	83.3
Communication Electronics Subsystem	81.8
Spacecraft Mass (Dry)	299.4
Consumables	41.3
Spacecraft Mass (Wet)	340.7
Spacecraft Reserve Mass	45.5
Spacecraft Wet Mass with Reserve	386.2

The structure is a hexagonal tube of aluminum honeycomb panels supporting horizontal aluminum honeycomb shelves at both ends. Aluminum honeycomb stiffening ribs positioned vertically along the full length of the tube at three of the six corners support an internally mounted propellant tank. On one end of the hexagonal tube is the Zenith panel which supports two-axis articulating solar arrays on an extendable mast. The nadir panel, on the opposite end, supports Ka-band crosslink and gateway antennas and a single L-band subscriber antenna. The remaining six subscriber antennas cover the side of the hexagonal panels. Bus, processor, and communication electronics are located on the inside of the hexagonal tube.

The Thermal Control subsystem maintains the temperature of the SV and its components within a safe operation range under the simultaneous effects of the external space environment and component thermal dissipation during the entire mission. The major elements of this system are: (a) Surface finish coatings, (b) Thermal insulation blankets, (c) Thermal conducting materials, (d) Makeup heaters, (e) Temperature sensors and thermal control processing, and (f) Heat pipes.

8.0 OPERATIONAL LIFETIME AND SV RELIABILITY

The operational lifetime of each SV is determined by a number of factors, including solar array degradation, stationkeeping fuel consumption, and random parts failure. The following indicates the estimated lifetime of the SV for each of these factors: (a) Solar array degradation - 5 years, (b) Stationkeeping fuel - 8 years (3 sigma orbital, insertion accuracy assumed), and (c) Random parts failure - 5 years. Redundancy will be provided on critical hardware as determined to be necessary through reliability analyses and predictions.

THE IRIDIUM™ GROUND SEGMENTS

OVERVIEW

The IRIDIUM™ Ground Segments comprise three separate entities. These are the System Control Segment (SCS), the Gateway Segment (GWS) and the IRIDIUM™ Subscriber Unit Segment (ISU). The SCS provides the resources necessary to enable the safe and efficient operation of the IRIDIUM™ system in normal and emergency situations. A primary role of the SCS is to operate the network in a manner that maximizes the availability, capacity, and grade of service through network resource management and constellation management. The GWS, on the other hand, controls user access and provides interconnection to the terrestrial Public Switched Telephone Network (PSTN) for the IRIDIUM™ System. Gateways also support call operations, collect billing information and maintain subscriber files for those users assigned to the gateway. The ISU Segment provides the interface between the subscriber and the IRIDIUM™ system. Several ISU product types have been identified including personal, mobile, portable and transportable.

1.0 IRIDIUM™ SYSTEM CONTROL SEGMENT

The SCS manages and controls all IRIDIUM™ system elements, insuring that service to the user is maintained in both the short term and over the long haul. Functions performed by the SCS fall into three general areas: active control of the SVs, monitoring and control of the network nodes, and control of the communications assets of the satellites (SVs). These tasks are performed by separate, collocated subsystems.

1.1 Constellation Operations

The primary functions of the constellation operations subsystem include:

- Managing each SV orbit. Over time, a SV's orbit tends to decay because of effects such as high altitude atmosphere and solar pressure. One of the constellation operations functions is to monitor this decay and order the firing of thrusters on the SV to correct the orbit.

- Monitoring each SV's health. Telemetry information reflecting the status of each of the SV's many systems is continuously telemetered to the SCS. When unusual situations or failures occur, it is often possible to issue commands to a SV to work around the problem, and sometimes even correct it.

- Supporting SV launch and checkout. As each SV is launched, it must be maneuvered into its final orbit and tests must be run to verify proper functioning. These activities are performed under the control of the constellation operations subsystem.

- Removing SVs from the constellation. As each SV reaches the end of its useful life it must be maneuvered away from the rest of the constellation and safely de-orbited.

1.2 Network Operations

The network operations subsystem performs the routine and emergency monitor and control functions associated with the day-to-day operations concerning the maintenance of the IRIDIUM™mission communications network and concerning the health and status of the individual nodes and links that constitute the IRIDIUM™ communications network.

Examples of the functional capabilities provided by this subsystem include those initiated by SCS operators such as diagnostic tests and routines, those associated with real-time automated functions such as alarms, those related to maintaining the overall status of the IRIDIUM™ network including the status of individual communications links and nodes, those related to the reconfiguration control of the network such as network routing table updates and node activation or deactivation, those related to network anomaly analysis and resolution, those related to network simulations, and those related to generating the billing/receivables status and summary reporting of the IRIDIUM™ network.

1.3 Communications Operations

This subsystem provides the communications-related support functions required to interconnect the SCS subsystems to each other and to interconnect the SCS to the SVs, the gateways, the launch segment and various external entities.

Examples of the functional capabilities provided by this subsystem include those related to the security aspects to prevent unauthorized commanding of the constellation, those related to the maintenance of continuous communications connectivity between the constellation operations and all space vehicles, those related to the archiving of space vehicle command and telemetry information, and those related to the physical communications with the space vehicles via the K-band up/down links. These links are identical to those used by the gateways to communicate with the SVs and are described in the gateway discussion.

2.0 IRIDIUM™ GATEWAY SEGMENT

The Gateway Segment controls user access and provides interconnection to the terrestrial PSTN. To accomplish this mission, the gateway is subdivided into two major subsystems: an earth terminal provides access to the IRIDIUM™ network and Switching Equipment provides the capability to coordinate call operation, and a switch facilitates the interconnection with the terrestrial system.

2.1 Earth Terminal

The key K-band Earth Terminal parameters are summarized in Table 2.1-1. Each gateway earth terminal contains three RF front-ends supporting continuous operations with extremely high reliability. One RF front-end is used to establish uplink and downlink communication with the servicing SV while another is used to establish communication with the next SV to be serviced. A third RF front-end provides backup capability in case of equipment failure and also provides geographic diversity against unusual sun or atmospheric conditions that would degrade service. Each RF Front-end consists of a Ka-band antenna, receiver, transmitter, demodulator, modulator, and TDMA buffers.

Since the orbiting SVs are in motion relative to the gateways, both primary antennas follow the track of the nearest two SVs. The communication payload being conveyed across the active link must be handed off periodically, from the current SV to the next one as the current SV disappears from view. This handoff process will be transparent to both IRIDIUM™ and PSTN users involved in active calls.

Each RF front-end is controlled by an earth terminal processor, which provides antenna pointing commands based on ephemeris data provided by the SCS. In addition, this processor provides status and performance data to the SCS so that the gateway operations within acceptable limits can be verified. The SCS will be able to direct specific gateway hardware to be tested, diagnosed, and reconfigured as necessary. In addition, the SCS can direct the gateways to reduce or terminate their

access to the IRIDIUM™ network or the PSTN when continued operations would result in possible harm to either one.

Table 2.1-1
Gateway Earth Terminal Summary

Data Rate	12.5 Mbps
Error Correction Coding	Convolutional, Rate = 1/2, K = 7
Modulation	QPSK
Frequency Bands: Transmit Receive	27.5 - 30.0 GHz (Uplink) 18.8 - 20.2 GHz (Downlink)
Ground Tracking Antenna: Diameter	3.5 Meters
Gain	53.7 dB @20 GHz 57.6 dB @ 30 GHz
Sidelobe Level	Will meet the criterion of 47 CFR
3 dB Beamwidth	0.36 Degrees @ 20 GHz 0.24 Degrees @ 30 GHz
Pointing Angle Range	360 Degrees Azimuth +5 to 90 Degrees Elevation
Ground Acquisition Antenna	Passive Array, Configuration TBA
Transmitter EIRP: Clear Weather Heavy Rain	51.6 dBW (+/- 3 dB) 77.6 dBW Max (+/- 3 dB)
Receiver G/T	22.9 dBi/K
Minimum Eb/No	6.7 dB @ BER 10^{-6}

The RF front-end High Power Amplifier power output will be controlled to compensate for atmospheric attenuation (such as rain). Received signal strength will be monitored and used to obtain information on atmospheric attenuation. The received electric field intensity at the SV will be maintained at a constant level that is within 6 dB of the minimum required to maintain a 10^{-6} bit error rate. The vast majority of the time, this will imply that the RF front-end EIRP will be within 3 dB of nominal.

Communication with the SCS will normally be achieved by using up to 1 Mb/s data rate to the active SV; the information is transported by the IRIDIUM™ Ka-band network between each SV and the active SV serving the SCS. To ensure that essential information flow is not disrupted in the face of Ka-band network anomalies, backup terrestrial communication channels conforming to CCITT V and X Series Recommendations will also be provided between the gateways and the SCS.

2.2 Switching Equipment

Each gateway provides switching equipment to interface between the communication payload in the Ka-Band link and the voice/data channels of the PSTN for maintaining calls. This equipment performs the following functions:

- Transferring in-band line/address signals associated with PSTN Signalling System R1 to establish and terminate circuit-switched connections.
- Transferring common channel signalling information associated with PSTN Signalling System 7 to establish and terminate circuit-switched connections.
- Supplying in-band tones and announcements to PSTN users to indicate call progress conditions.
- Digital switching of PCM signals between channels derived from the earth terminal data, channels connected to the PSTN, and channels used to support in-band signalling of call control or progress information.
- Collecting and supplying call information to the local billing office for billing purposes.

The IRIDIUM™ system will provide both voice and data connections through its SV network, allowing information to be transferred between a subscriber terminal and any other IRIDIUM™ or PSTN user. Voice connections will be designed fully compatible with applicable ANSI T1 standards and the CCITT G and Q Series Recommendations for digital transmission systems utilizing Signalling Systems R1 and 7 (as adapted for the U. S. telephone network). It is anticipated that interconnections will be made to local exchange, inter-exchange, and international carriers to allow an IRIDIUM™ user to establish a connection to any destination in the world.

2.3 Transportable Multiple Units

The Transportable Multiple Unit (TMU) is another gateway configuration with which small remote telephone systems, with poor existing connections to other telephone exchanges, will be able to connect to the IRIDIUM™ system. Each TMU (previously called a "Bridge") consists of two gateway building blocks: (1) The L-band Terminal, and (2) The Multi-line Processor. The L-band Terminal provides connection to the system through L-band Multi-ISU emulation. The Multi-line Processor connects the land lines to the appropriate L-band ISU line, and performs the TMU control function.

3.0 Subscriber Unit Segment

Communication between the ISU and the SV is over a full-duplex FDMA channel in TDMA bursts of QPSK modulated digital data. Digitized voice is encoded and decoded using the Motorola 4800 bps VSELP vocoder algorithm (selected as the U.S. Digital Cellular Competition). Subscriber 2400 baud data and 4800 bps digital voice data are protected with convolutional coding and interleaving. Table 3-1 provides a technical summary of a typical subscriber unit.

ISU uplink TDMA burst timing is synchronized to the downlink burst. The ISU compensates for changes in SV range by timing the uplink burst transmission to arrive at the SV with correct TDMA frame alignment. The ISU also compensates for the SV doppler frequency shift by adjusting the uplink transmit frequency.

Table 3-1
Subscriber Unit Summary

Coded Data Rate: Uplink Downlink	180 Kbps 400 Kbps
Error Correction Coding	Convolutional, Rate = 3/4, K = 7
Modulation	QPSK
Frequency Band	1610.0-1626.5 MHz
Antenna: Type Gain Area of Coverage	 Quadrifilar Helix +1.0 to +3.0 dBi 360 Degrees Azimuth +10 to 90 Degrees Elevation
Transmitter EIRP: Peak Average	8.45 dBW (7.00 Watts) Maximum -4.70 dBW (338 Milliwatts) Maximum
Receiver G/T	-23.8 to -21.8 dBi
Minimum Eb/No	3.1 dB @ BER 10^{-2}

SPECTRAL EFFICIENCY COMPARISON OF LEO AND GSO SATELLITE SYSTEMS

1. INTRODUCTION

This paper compares the spectral efficiency of two worldwide mobile satellite communication systems, one operates in low earth orbit (LEO) and the other in the geostationary orbit (GSO).

The LEO system considered is the IRIDIUM Low Earth Orbit Mobile Satellite System (MSS-LEO). It is a worldwide personal communication satellite system that consists of 77 satellites in 413 nautical mile circular orbits. Each of these satellites provides up to 37 spot beams on the surface of the Earth. The result is a cellular pattern on the surface of the Earth with each of the cells approximately 372 nautical miles in diameter.

The GSO satellite system considered is the worldwide INMARSAT system. Although the system now uses global beam satellites, it is developing the INMARSAT-3 class of spacecraft that uses spot beams. Each of these satellites contains several spot beams that cover specific areas of the Earth's surface.

The spectral efficiency of the systems are compared on the basis of the number of full duplex voice channels that each system may provide in the same geographical coverage area. This analysis assumes the INMARSAT-3 spacecraft will have sufficient power to utilize all the available spectrum, although there is currently insufficient public information to confirm that assumption.

The number of IRIDIUM spot beams or "cells" in an INMARSAT-3 satellite spot beam has been identified by INMARSAT and documented in a submission to the CCIR at the JIWP meeting held in Geneva, Switzerland, from March 4 to 15, 1991. INMARSAT has determined that approximately 100 of the MSS-LEO spot beams are covered within an INMARSAT-3 spot beam [1].

---

[1] INMARSAT Document JIWP92/52, Annex 1, page 10 "The number of cells visible within the coverage of an Inmarsat-3 spot beam, such as the European beam from the Atlantic Ocean Region East satellite, is estimated to be around 100 cells. In such a high traffic region, it is assumed that the cells are 90% active"

2. SYSTEM CHARACTERISTICS

2.1 MSS-LEO Characteristics

The characteristics of the MSS-LEO System are defined in Section 6.1.1.2.7 of the CCIR JIWP 92/3 Report. Table 6.III of the JIWP report[2] indicates a capacity of 110 full duplex voice channels per cell in an assumed total bandwidth of 10.5 MHz. There are, therefore, a theoretical maximum of 11,000 full duplex voice channels in the 100 IRIDIUM cells in the coverage of an Inmarsat-3 spot beam in a 10.5 MHz bandwidth. The system has a nominal 7 cell frequency reuse pattern.

2.2 MSS-GSO Characteristics

The characteristics of the INMARSAT system are defined in Section 6.1.1.2 of the CCIR JIWP Report. Table 6.I provides an INMARSAT System overview. Table 1 below gives the channel spacing for each of the INMARSAT voice capable terminals and the theoretical maximum number of channels that may be provided in a 10.5 MHz bandwidth. These are the number of channels that are available in one INMARSAT-3 spot beam which corresponds to 100 IRIDIUM cells.

TABLE 1

INMARSAT CHARACTERISTICS

Terminal Type[3]	Channel Spacing - KHz Uplink	Downlink	Total	Channels in 10.5 MHz
Std B	20	20	40	262.5
Std M	10	10	20	525
Aero	17.5	17.5	35	300

3. SPECTRAL EFFICIENCY COMPARISONS

The spectral efficiency of the two systems may now be compared for a single INMARSAT-3 beam. Section 3.1 compares the theoretical maximum capacities of the systems. Section 3.2 compares the systems using typical loadings on the systems.

---

[2] See addendum 1 to Document JIWP 92/110, 13 March 1991 "Section 6.1 of JIWP 92/3"

[3] Standard A terminals are not included since they are not designed for operation with the INMARSAT-3 spot beams.

3.1 Theoretical Maximum Capacity

Table 2 shows the comparison of the theoretical maximum number of full duplex voice channels that each system may provide in a reference bandwidth of 10.5 MHz. The spectral efficiency ratio is the ratio of the number of IRIDIUM channels divided by the number of INMARSAT-3 channels in a single beam.

TABLE 2

SPECTRAL EFFICIENCY OF IRIDIUM VERSUS INMARSAT
FOR A SINGLE INMARSAT -3 BEAM
(THEORETICAL MAXIMUM)

Terminal Type	Number of channels in 10.5 MHz		Spectral Efficiency Ratio
	INMARSAT-3	IRIDIUM	(IRIDIUM/INMARSAT-3)
Std B	262.5	11,000	42
Std M	525	11,000	21
Aero	300	11,000	37

3.2 Capacity for Different Channel Loadings

Table 3 shows the comparison of spectral efficiencies of the systems for different channel loading. The table assumes that INMARSAT operates at a 90% channel loading. Two examples are presented for loading of the IRIDIUM system.

Theoretical Maximum: This is the INMARSAT assumption in reference 1. It assumes that, in a high traffic region, the IRIDIUM cells are 90 % active and there are 100 cells in an INMARSAT-3 spot beam.

Land Mobile: This is a conservative estimate. It assumes only land mobile operation of the 100 IRIDIUM cells within the INMARSAT-3 beam and that only 32 cells are active over the land areas of Europe. These cells are assumed to have only a 65% loading. No IRIDIUM traffic is assumed over the oceans.

TABLE 3

SPECTRAL EFFICIENCY OF IRIDIUM VERSUS INMARSAT
FOR A SINGLE INMARSAT-3 BEAM
(TYPICAL CHANNEL LOADING)

Terminal Type	Spectral Efficiency Ratio (IRIDIUM/INMARSAT-3)	
	THEORETICAL MAXIMUM	LAND MOBILE
Std B	42	9.7
Std M	21	4.8
Aero	37	8.5

4. SPECTRUM REQUIREMENT COMPARISONS

Another method for comparing systems would be the spectrum required for an equivalent number of channels. The reference for IRIDIUM is 10.5 MHz.

TABLE 4

SPECTRUM REQUIREMENTS FOR AN EQUAL NUMBER OF CHANNELS
IRIDIUM VERSUS INMARSAT-3

Terminal Type	Spectrum Required - MHz[4]		
	IRIDIUM	INMARSAT-3	
		THEORETICAL MAX	LAND MOBILE
Std B	10.5	440	102
Std M	10.5	220	51
Aero	10.5	385	89

5. CONCLUSIONS

The above analysis shows that a MSS-LEO satellite system, as represented by IRIDIUM, is considerably more spectrally efficient than the GSO systems, as represented by INMARSAT. Even the most spectrally efficient INMARSAT systems, as represented by the INMARSAT-3 satellite and the Standard B and M earth terminals, are significantly less spectrally efficient compared to IRIDIUM.

---

[4]It is theoretically possible for two INMARSAT-3 satellites, widely separated in the GSO, to each place a spot beam on the same geographic area, thereby allowing high gain INMARSAT Terminals to reuse the frequency. If this were accomplished, the spectrum required for the INMARSAT cases would be halved.

HANDOFF DESIGN CONSIDERATIONS FOR THE IRIDIUM™ SYSTEM

1.0 INTRODUCTION

The concept of handoff is central to the operation of a cellular communications system. In a terrestrial implementation, handoffs occur as the mobile phone moves through the fixed pattern of cells. The underlying generator of such handoffs is the relative motion of network and user, implying that handoffs are generally associated with and derivable from the relative motions of system elements. An enumeration of handoff types for a given system architecture then follows directly from a consideration of such dynamic behavior.

Enumerating handoff types is only the first step in the solution of the "handoff problem" as it relates to the IRIDIUM™ system. Detailed procedures for implementing the handoff scenarios must also be developed which satisfy two top-level requirements. First, handoffs must be transparent to the user. Second, link utilization related to handoffs must be minimized, thereby minimizing interference with user message traffic. This "optimization" must be consistent with the constraint imposed by the availability of processing support at each node type. The purpose of this paper is to baseline the approach to handoff management.

2.0 IRIDIUM™ SYSTEM DYNAMICS

The IRIDIUM™ network is defined to consist of 77 space vehicles (SVs), the earth terminal portions of the System Control Segment (SCS) and each gateway, and the links between these segments. The combination of the collection of IRIDIUM™ Subscriber Units (ISUs) with this network comprises what will be referred to as the "system". The IRIDIUM™ system so defined is considerably more complicated than a terrestrial cellular system since a substantially larger number of geometric parameters are changing. In particular, for the IRIDIUM™ system, not only does the user move relative to the network, but elements of the network move relative to each other.

To begin, the satellites move in well-defined (and maintained) orbits that are approximately fixed in inertial space, but rotate relative to the surface of the earth. Maintenance of a viable link requires a rapid succession of handoffs to compensate for the high-speed motion of the space-based portion of the network. In principle the handoff sequence is predictable, given accurate data on constellation dynamics, satellite orientations, antenna patterns, propagation conditions, and phone geolocation.

The above scenario also applies to the maintenance of link integrity between the SV and the gateway portions of the network. Two separate scenario types result. The first is related to the integrity of the line-of-sight (LOS) link which carries message traffic between the IRIDIUM™ constellation and each gateway. The second relates to the dynamic assignment of SVs to gateways for the support of call processing.

This picture is complicated somewhat by the functional differences between servicing gateways (SGWs) and home gateways (HGWs). In particular, gateways assigned the HGW role are not allocated the (logical) capability to control space-based network resources. This means that handoff operations in support of such gateways must be controlled by an assigned SGW. This substantially complicates the handoff process at such nodes.

In addition to handoffs caused by the relative motion between earth-based and space-based system nodes, the relative motion between pairs of IRIDIUM™ SVs requires that handoffs occur as the cell configuration of individual satellites changes with time. This occurs as individual cells are

activated/deactivated to maintain the spatial separation necessary to control co-channel interference caused by cell overlap. Deactivation not only forces the handoff of previously covered users to adjacent cells, but also imposes a shift of time-slot assignment throughout the network to ensure the continued integrity of the cell reuse pattern. Consistent with the definitions to be established below, such shifts in time slot are also considered to be handoffs.

3.0 BASIC TERMINOLOGY

A handoff is said to have occurred whenever a network asset servicing a system element (segment) is changed. This very broad definition can immediately be made more specific by considering the nature of the serviced node involved.

Consider, for example, handoffs related to the maintenance of the LOS links between user nodes (ISUs or PSTNs) and the SV portion of the network. ISU handoffs are characterized by a one-to-one correspondence between handoffs and IRIDIUM™ connections, whereas a gateway handoff, required to maintain communications with a PSTN can involve control transfer for as many as 1300 calls in a single bulk handoff. A second difference between ISU and gateway handoffs is that the immense processing power and data base structure resident at the gateway permits it to perform a large portion of the control functions necessary to support handoff.

It is clear that a single functional decomposition will not simultaneously accommodate both of these processes. The efficient realization of these handoffs therefore requires a detailed examination of their unique properties as well as their common attributes.

4.0 HANDOFF HIERARCHY AND CAUSAL RELATIONSHIPS

Starting from the basic definition, a handoff hierarchy can be specified. First define an IRIDIUM™ L-band channel to consist of a time-slot assignment and an uplink frequency assignment. It should be noted that downlink frequency is not included as part of the channel definition.

An ISU L-band channel reassignment not associated with a physical movement between cells is said to constitute an **ISU Intra-Cell Handoff.** Handoffs necessitated by a reuse pattern shift or a demodulator failure would be events of this type.

Movement of an ISU from one cell to the next within the coverage of a single servicing satellite is said to constitute an **ISU Intra-Satellite handoff.** Such handoffs result naturally as the satellites move, and will occur even if the ISU is stationary. If the new covering cell belongs to a neighboring satellite, the servicing satellite ID is changed and an **ISU Inter-Satellite Handoff** is said to have occurred. Both inter- and intra-satellite handoffs involve a reassignment of both cell and channel.

Handoffs associated with cell shutdown may be of either the intra- or inter-satellite type. The cell shutdown algorithm is designed to prevent cells of one satellite's pattern from penetrating too far into the pattern of a neighboring satellite. The result is that cell shutdown will always occur in cells forming a portion of the outer ring of cells in a SV's pattern. In most cases it would seem that cell shutdown would result in an inter-satellite handoff. This follows from the fact that the terminated cell is deactivated specifically because it is overlapping cells of a neighboring satellite. Most of its users will therefore reside in geographic regions covered by cells from the neighbor. Inter-satellite handoff therefore appears to be the most likely corrective action for maintaining service.

Certain IRIDIUM™ architecture options incorporate "wildcard" timeslots which are temporarily allocated to individual cells to compensate for loading variations. Ideally, the time slot shutdown process inherent in such schemes is compensated for via intra-cell handoff. This assumes that the

timing of the shutdown is such that the remaining accessible time-slots can absorb the traffic remaining in the terminated time slot at the time of shutdown. In cases where cell loading exceeds the remaining cell capacity, intra- or inter-satellite handoffs are required to provide a continuation of service. The decision as to which users are transferred out-of-cell, and their destinations, are clearly determined as a function of the computed user location within the original cell.

Relative motion also exists between ISUs and gateways. In the vast majority of cases this motion is small. However, situations will occur in which an ISU resident on a high-speed platform will pass from one area of coverage to the next. This requires call control transfer between the two neighboring gateways. This transfer defines what will be referred to as an **ISU Inter-Gateway Handoff.**

Similar terminology can be defined for gateway handoffs. An SV is assumed to have the capability to activate individual K-band downlink beams to support communications traffic with gateways. The shifting of activation from one beam to the next within a single satellite so as to maintain link quality is referred to as a **Gateway Intra-Satellite Handoff.** Control transfer to the next satellite defines a **Gateway Inter-Satellite Handoff.**

The above discussion of gateway handoffs also pertains to maintenance of the LOS control link between SVs and the SCS. That is, one can define a SCS **Intra-Satellite Handoff** and a SCS **Inter-Satellite Handoff** in a manner entirely analogous to that used to describe the SV/gateway interaction. Therefore, there will be no separate discussion of SCS handoffs.

Gateway handoffs involve maintenance of the LOS link between a given gateway and the space-based portion of the IRIDIUM™ network. The association also works in the reverse since individual SVs must be connected to gateways so that they may have access to the call processing support capability resident in the gateways. The maintenance of the link supporting these functions, which need not be LOS, is the defining requirement for the SV **Inter-Gateway Handoff.** Such handoffs are determined by the location of the SV relative to the collection of fixed gateways. The resultant time-dependent association of SVs to gateways is best done under the control of the SCS so that the processing load is evenly distributed among the geographically (unevenly) distributed gateways. It should be emphasized again that a SV need not have LOS to a gateway to be assigned to that gateway due to the connectivity provided by the cross-link elements of the network.

5.0 HANDOFF DESIGN TRADEOFFS
5.1 GENERAL CONSIDERATIONS

There are two competing views related to the management of handoffs. The first view of IRIDIUM™ handoffs suggests that because of the predictability of the intersections of SV downlink beams with the surface of the earth, it is possible to schedule handoffs in an effective manner over relatively long time periods. The opposing viewpoint (referred to as adaptive scheduling) holds that inherent inaccuracies in the data available to the network, coupled with the link overhead required to bring all necessary data to the computing node, makes handoff scheduling ineffective and costly in terms of resource utilization. This alternate view suggests that complete handoff management is facilitated by signal environment monitoring at the ISU or gateway in addition to fixed scheduling.

Handoffs triggered by cell shutdown are entirely under the control of the network. Furthermore, the resident ISUs must be handed off even if signal quality available from neighboring cells is insufficient to support baseline reception requirements. Such handoffs can therefore be scheduled by the network, and implemented by each ISU and its associated SV at the appropriate frame.

The situation regarding handoff control for scenarios related simply to the relative motion of ground nodes and SVs is less clear. Such handoffs are also predictable in the sense discussed above. That is, the motion of the cells across the surface of the earth is known, as is the location of the ground node, thereby making it possible, in principle, for the network to predict both the direction and frame time of each successive handoff. For a gateway the scheduling node would presumably be the SCS, and for an ISU the scheduling node would be its SGW. For an ISU, such information would need to be computed based on localization information provided by the ISU, which would permit handoffs to be effectively "implemented" at the time of call setup, eliminating the need for coordination at each handoff event.

Although this notion is appealing, numerous factors impact the accuracy of such predictions, especially where ISU handoffs are concerned. Therefore any such scheduling procedure must incorporate a backup procedure in which the ISU discards the schedule in favor of an action based on the real-time signal environment.

5.2 HANDOFF CONTROL DESCRIPTION

The approach to be presented below is essentially that of prescheduling all handoffs since it is expected that such scheduling will be effective in the majority of cases. Included within this methodology is a fallback mode in which the ISU has the capability to choose its own handoff direction in cases where the scheduled sequence is not consistent with the local signal environment, i.e., the indicated handoff cell does not provide sufficient signal strength to satisfy bit error rate (BER) requirements.

In this approach, all handoffs are scheduled by the gateways or the SCS. For gateway handoffs the sequence of servicing satellites (i.e., gateway inter-satellite handoffs) for each gateway is determined by the SCS so as to prevent competition for SV resources. However, the actual frame time corresponding to a given handoff is determined by the involved gateway based on a handshake procedure with the SV. For all such handoffs, beam activation onboard the SV is controlled by the gateway. This implies that gateway intra-satellite handoffs are executed totally under the direction of the gateway itself, while gateway inter-satellite handoffs are initiated by the SCS but augmented by a handshake procedure between the SV and the gateway.

Assignment of the control function to the gateway is based on the ample availability of processing power on the ground, and the requirement for link closure verification prior to handoff activation. Gateway handoffs may be further complicated by the differentiation of functions between SGWs and HGWs. As HGWs are not expected to have the capability to command SV resources, handoff processing for such nodes will need to be accomplished by the SGW associated with the HGW.

Consistent with the baseline message routing scheme based on satellite IDs, the gateway handoff methodology includes a broadcast function for the SVs to assure that all SVs have the current assignment of SVs to gateways. Therefore, each SV can effectively route messages to any gateway at any time.

Given that the routing between SVs and gateways is maintained in real time throughout the network, satellite handoffs can be executed in accordance with a schedule supplied by the SCS. Handoff notification and supporting databases pertinent to SV resource utilization are transferred to the new servicing gateway, which schedules the actual frame time of the control transfer.

ISU handoffs are scheduled by the servicing gateway at the time of call setup. Call geometry is determined by merging constellation configuration data (both satellite location and beam configuration) with ISU SV/cell ID, range, and doppler data. This information is then merged with scheduled cell maintenance events such as reuse pattern shifts to create a master handoff schedule covering a period of time consistent with call duration statistics. Compatibility of the

scheduled requests with the overall allocation of resources on the SV may or may not be assured by the scheduling gateways. This issue will now be addressed in some detail.

5.3 ISU HANDOFF SCHEDULING ISSUES

Certain issues must be addressed in connection with ISU handoff scheduling. Clearly, the length of the scheduling period must be determined. In addition, one must decide whether scheduling is defined to include resource reservation. A discussion of tradeoffs concerning resource reservation follows.

In the current context, "reservation" means that as part of the scheduling procedure, the SV resources needed to support a given call are allocated to that call some distance into the future. Such resources are then not available to support other calls during the time period between resource scheduling and activation in support of the original call. Such a procedure essentially protects on-going calls at the expense of "new" calls. Without including reservation as part of the scheduling process, the schedule is not protected. This approach then favors new calls, possibly at the expense of on-going calls.

It is generally accepted that users are more tolerant of busy signals than dropped calls. Therefore, we first consider scheduling with reservation as being inherently the more desirable of the two options. One approach would entail scheduling each call over a fixed time duration determined by IRIDIUM™ call statistics. But even in the general case where resources are available, the selected schedule length will not always be sufficient for all calls, and the gateway will need to update the schedule as required. Schedule updates will also be required to accommodate situations where signal strength from the indicated cell is not sufficient for link maintenance.

The above procedure implies a requirement for the simultaneous scheduling and release of resources on multiple SVs, where the (scheduling) gateway controlling the ISU does not necessarily control all pertinent SVs. In this case, access to a SV for call processing support involves the cooperation of the gateway controlling that SV at the time the schedule is established, e.g., at call setup. Such coordination represents a non-trivial network overhead function.

One may eliminate the need for inter-gateway coordination by assuming that the controlling gateway only schedules resources on its own SVs. This means that the length of the scheduled interval will be a function of the location of the ISU within the geographic region serviced by that gateway. In particular, relative to a fixed ground point, satellites move to either the northwest or the southwest depending on which side of the orbit is overhead. An ISU in the corresponding "corner" of the gateway's coverage area will "move" diagonally across the region, and can therefore be scheduled over a relatively long period of time. ISUs in other locations will move to the boundary of the region more quickly, and for some locations the practical scheduling length will reduce to the individual cell transition time. In such cases, prescheduling is equivalent to cell-by-cell monitoring and can represent a large load on the gateway links.

The problem is simplified if resource reservation is not included as part of the scheduling procedure. In this approach, the gateway simply predicts the path of the ISU through the SV coverage patterns for some fixed period of time and communicates this mapping to the ISU. At the indicated handoff epochs the ISU coordinates with the appropriate SV, which may or may not have resources available. Unavailability of resources would presumably force the ISU into an adaptive search mode to identify an alternative handoff opportunity.

To summarize, resource reservation protects on-going calls while imposing a cost in terms of decreased system capacity, increased processing complexity and increased gateway link utilization. Scheduling without reservation is far simpler, but will result in an increase in dropped calls. On-going trades will serve to quantify these impacts, leading to final process design.

5.4 ADAPTIVE SCHEDULING MODE

Adaptive scheduling applies to events where the actual handoff destination is determined in real time. As such, adaptive scheduling applies only to ISU handoffs, and is implemented to prevent scheduling inaccuracies from compromising call continuity. The following discussion describes what is meant by adaptive scheduling.

An ISU is assumed to sample the handoff destination cell signal prior to the scheduled handoff frame time. Based on criteria yet to be established the unit evaluates this signal. If the signal does not satisfy quality constraints, the unit scans the other time-slots for a more suitable signal source. If such an alternative can be identified, the unit then requests a handoff transfer which diverges from its schedule. For the current baseline approach, adaptive handoff requests are processed by the gateway, since the gateway must reschedule and re-coordinate the the handoff sequence in response to such deviations.

6.0 HANDOFF METHODOLOGIES

With the information presented in the preceding paragraphs as a foundation, more detailed functional designs for various handoff scenarios are in the process of being formulated. Certain general, qualitative guidelines have been applied to the design process so as to reduce the number of options which need to be explored. The expectation is that these will rapidly lead to a solution which is not far from optimal. In particular, the handoff procedures are designed to take into account:

- the limited space vehicle processing power available for functions other than message switching
- the limited gateway link capacity relative to its projected loading, i.e., subscribed users utilization
- the limited ISU processing potential stemming from its electrical power constraints

In any discussion of handoff methodologies, it is useful to identify the data (potentially pertinent to handoff implementation) which is expected to be available at each node. Any methodology design must then determine what additional information is required for handoff implementation and how to collect the information necessary for handoff control at the scheduling node.

The ISU is in possession of the satellite ID/cell number associated with its current location. It will possess its geographic location either explicitly as a result of its GPS interface, or implicitly as a result of information obtained during the uplink synchronization process. In addition, the ISU may possess information regarding the link quality in each time-slot. This last information type is not available at any other system node.

The SV associates an ISU with a particular cell ID at the time of call setup. The SV will always maintain a file associating each user with the corresponding channel number, cell ID, etc.. It is in possession of tables governing cell shutdown/restart, cell timeslot reassignment, and the destination SV-to-crosslink routing conversion. The SV also provides nadir coordinates and attitude readout. It maintains mod/demod channel status and the status of individual antenna elements. The SV also must maintain status of its own crosslink ports and facing ports of its neighbors to facilitate message routing. Each SV maintains a real time account of the utilization of its communications resources.

Each gateway is assumed to be in possession of information related to the constellation configuration, its local traffic, and the hardware resources available on each SV. A given gateway maintains usage information related to calls established by satellites while under its control. Each

gateway is assumed to possess an SV coordination schedule provided by the SCS to support gateway and SV handoffs. This implies that the real-time execution of the switching of SV assignments is entirely under the control of the gateway.

7.0 SUMMARY

An examination of the dynamics of the IRIDIUM™ system results in the identification of seven handoff types. Five of these have been discussed previously, and are summarized as follows:

ISU Intra-cell Handoff - ISU channel reassignment within a given SV cell

ISU Intra-satellite Handoff - ISU channel reassignment resulting from ISU passage from one cell to the next within the same servicing SV.

ISU Inter-satellite Handoff - ISU channel reassignment resulting from ISU passage from a cell within the coverage zone of one SV to a cell within the coverage zone of a neighboring SV.

Gateway Intra-satellite Handoff - SV K-band downlink antenna element activation/deactivation to maintain the LOS link between the IRIDIUM™ space segment and a gateway.

SCS handoffs are not defined separately, but are assumed to be functionally identical to gateway handoffs. In addition, two other handoff types have been identified. These are related to the maintenance of network connectivity and are entirely transparent to the user. They are:

ISU Inter-gateway Handoff - Reassignment of gateway providing call processing support to an ISU call. Except for instances of gateway malfunction, this handoff type may be eliminated through use of the anchoring gateway concept. This is implemented through SV logic which links the ISU to a specific gateway for the duration of a call

SV Inter-gateway Handoff - Change in the gateway providing call processing service to a particular SV. This results naturally from the motion of the space segment.

Handoff management issues are also examined. Handoffs are viewed as events scheduled by the network. For gateways and SVs this scheduling is provided by the SCS. For ISUs, scheduling is provided by the anchoring gateway. Handoff scheduling for ISUs is augmented by an adaptive scheduling mode which permits the ISU to deviate from the predetermined schedule in instances where the indicated handoff cell cannot be acquired. All handoffs are closed loop, with the actual frame time of control transfer determined by the participating nodes.

The notion of resource reservation within the scheduling scheme is also examined. Protection of call continuity for a fixed period of time through reservation of resources imposes additional network overhead in the form of inter-gateway coordination requirements. Elimination of the inter-gateway coordination requirement permits resource reservation over a limited time frame which is dependent on the location of the ISU within the gateway geographic coverage region. This results in large overhead link utilization for ISUs located on the periphery of the coverage region.. Scheduling without resource reservation is efficient in terms of link utilization, but provides no protection for on-going calls, although the lack of reservation permits greater flexibility in new call initiation.