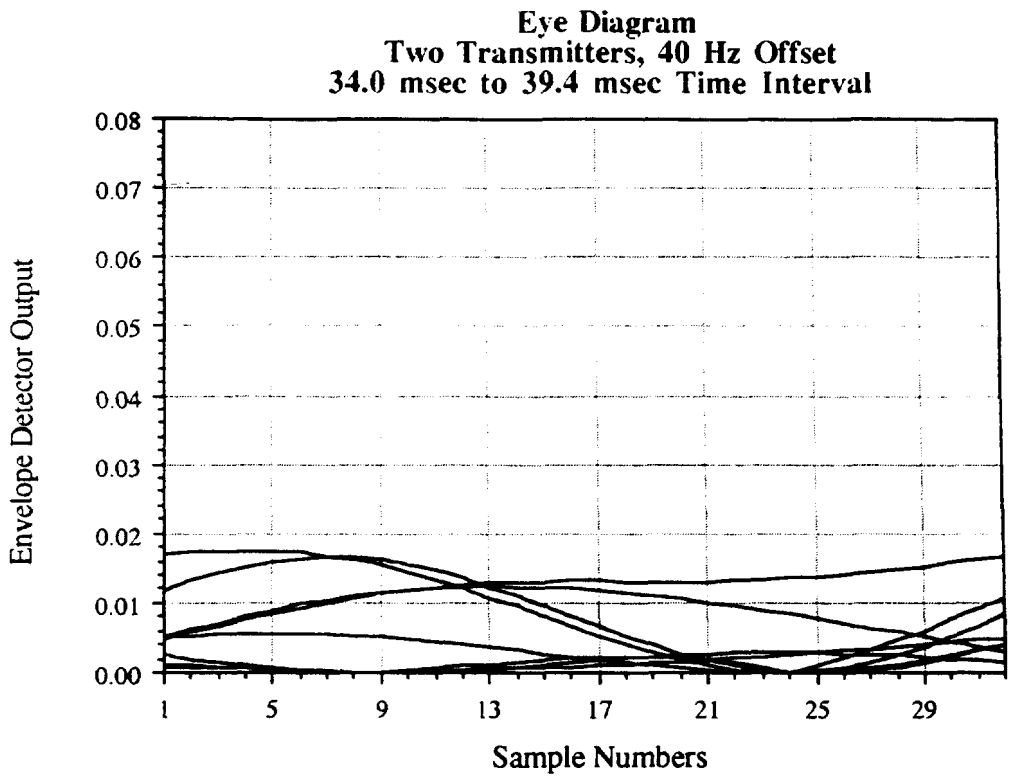

Figure 9 Eye diagram for a 5.4 millisecond portion of data taken from the envelope detector output shown in figure 7. The two carriers are more or less opposite in phase to each other, and therefore almost total cancellation of the envelope results.

In figure 9, the eye opening is almost closed over the 5.4 msec duration of the data set. The eye opening is only about 15 % of that shown in figure 8. This situation represents the case where the received carriers from the two transmitters are nearly 180° out of phase and almost total cancellation results (ie. a fade).

4 DISCUSSION

The simulation of the MOOK modulation scheme for use in a simulcast transmission system show that it is a promising candidate for use in the NWN system. The results of the simulation indicate that a data rate of 24000 bits/second is achievable in a simulcast environment. This is also the "least complex" implementation of a multi-carrier FDM signalling schemes, compared to more complex orthogonal schemes.

Simulations of a two transmitter simulcast system indicate that even with an 80 μsec simulcast delay for a baud rate of 3000 symbols/second per subcarrier (for a data rate of 24,000 bits per second with 8 subcarriers), little degradation in performance is observed. In the worst case situation of 0 dB power difference between the two received signals, the eye opening is only reduced by ≈ 10% for 80 μsec delay. Even for 166.7 μsec delay, the eye opening is only reduced by ≈ 25 %. This type of performance should not come as a surprise, since a similar concept has been used previously to achieve reliable and bandwidth efficient communications for the AN/GSC-10 (KATHRYN) variable rate HF modem [9]. In these systems the channel often suffers from severe dispersion distortion, which is essentially frequency dependent time delay distortion.

There appears to be little increase in the peak-to-peak jitter as a result of the simulcast delay, indicating that it should not pose a problem in the receiver demodulator. The use of simple symbol timing recovery schemes should be possible, thereby keeping the overall receiver cost lower than would be required with complex symbol timing recovery schemes.

In the situation where the carrier frequencies of the two transmitters were offset by 40 Hz, signal envelope fading was observed as expected. This results in the need for either an AGC loop to compensate for this envelope variation or to adapt the symbol decision threshold in the receiver. This is a fairly simple function to perform in the device, but it will be required to ensure a reasonable bit error rate performance in the presence of this carrier frequency offset. If frequency selective fading is dominant, then an AGC loop would probably be required for each individual sub-channel.

It is recommended that Mtel use its experimental license period to further investigate MOOK and other MCM techniques (such as QASK [1], PFSK [4,7,8], SQAM [1]) with respect to performance and implementation cost. However, the present simulation indicates that one Multicarrier Modulation (MCM) technique using Multitone On-Off Keying is capable of excellent performance in a simulcast environment, and implementation of a modem using this technique is feasible.

REFERENCES

[1] Feher, K.,
"Digital Communications: Satellite/Earth Station Engineering"
Prentice-Hall, Inc.,
1981

[2] Bingham, John A. C.,
"Multicarrier Modulation for Transmission: An Idea Whose Time Has Come",
IEEE Communications Magazine,
May 1990
pp. 5 - 14

[3] Cimini, Leonard J.,
"Analysis and Simulation of a Digital Mobile Channel Using Orthogonal Frequency",
Division Multiplexing,
IEEE Transactions On Communications,
Vol. COM-33, No. 7,
July 1985,
pp. 665 - 675

[4] Proakis, John G.,
"Digital Communications",
2nd Edition,
McGraw-Hill Book Company,
1989

[5] Bendetto, S., Biglieri, E., Castellani, V.,
"Digital Transmission Theory",
Prentice Hall Inc.,
1987

[6] Lindsey, W. C., and Simon, M. K.,
"Telecommunications System Engineering",
Prentice Hall Inc.,
1973

[7] Schneider, H. L.,
"Data Transmission with FSK Permutation Modulation",
The Bell System Technical Journal,
July-August, 1968
pp. 1131 - 1138

[8] Brookner, E.,
"The Performance of FSK Permutation Modulations In Fading Channels and Their Comparison Based On A General Method For The Comparison of M-ary Modulations".
IEEE Transactions On Communications Technology,
Vol. COM 17, No. 6,
December, 1969,
pp. 616 - 640

[9] Zimmerman, M. S. and Kirsch, A. L.,
"The AN/GSC-10 (KATHRYN) Variable Rate Data Modem for HF Radio",
IEEE Transactions on Communication Technology,
Vol. COM-15, No. 2,
April 1967,
pp. 197 - 204

[10] Lee, William C. Y.,
Mobile Communications Design Fundamentals,
Howard W. Sams & Co.,
1986
p. 156

This page intentionally left blank.

End of Part I

PART II

INTERMODULATION CHARACTERIZATION FOR NWN

Prepared by:

G.J. Garrison and N. Toms
MPR Teltech Ltd.
Wireless Programs

1 INTRODUCTION

1.1 Summary

This part of the report examines by simulation the adjacent channel intermodulation characteristics to be expected from an MCM mode of transmission, as proposed by Mtel in its petition for rulemaking. It looks at Mtel's proposal for throughput made in that petition, and concludes that readily available amplifier technology which could be deployed at a base station can support multicarrier modulation filling approximately half the allocated bandwidth[2], using appropriate back-off strategies described below.

Rates greater than this would need linearizers. MPR had neither the data nor the opportunity to quantitatively analyze linearizers. However, at least one reputable amplifier manufacturer has indicated that it could provide highly linear amplifiers whose performance is consistent with higher baud rates. With such amplifiers, MPR considers bit rates of 24000 bps to be feasible.

MPR's analysis focused on MCM where the carriers were spaced by 1.5 times the symbol rate ("non-orthogonal spacing"). A method of obtaining higher throughput uses orthogonal placement of carriers. Similarly, MPR had neither the data nor the opportunity to quantitatively analyze the performance of orthogonal carrier spacing, but agrees that such modulation at approximately 24000 bps could fit within a 50kHz band using available amplifier technology with appropriate back-off, as documented below. The performance of such a system would have to be evaluated during the experimental license period.

1.2 General Methodology

We consider the MCM scheme where several carriers fall within a modulation bandwidth.[3] This modulation bandwidth, in turn, occupies some fraction of the channel bandwidth. The analysis will discuss what fraction of the channel bandwidth can be occupied using practical amplifiers. The analysis is done in general terms, and numerical examples are provided later. We consider only the effect of intermodulation[4] on adjacent channels since the energy falling in non-adjacent channels is negligible.

The analysis has focused on two scenarios - one where the modulation bandwidth is one third of the channel bandwidth (illustrated in Figure 1-a) and one where the modulation bandwidth is one half of the channel bandwidth (illustrated in Figure 1-b). Both figures

[2]e.g. modelling was performed on MCM occupying 22.5 kHz of a 50 kHz band

[3]Defined as the bandwidth in which all of the desired signal energy is located.

[4]Undesired radiation produced by non-linearities in practical amplifiers.

use the same designations, Bm_0, Bm_1, Bm_2 and Bm_3 for adjacent spectral areas of width equal to the modulation bandwidth. Both figures consider two adjacent channels - channel A and channel B[5].

1.3 Methodology to analyze adjacent channel performance

In order to determine the ability of several adjacent channels to operate using the proposed modulation scheme, the analysis looks at the energy from a signal in channel A which falls in the modulation bandwidth of channel B. The merit of the terminology Bm_0, Bm_1, etc. is that we can compute the results for the energy in terms of these bandwidths and interpret them differently for each scenario, as shown in Section 3. Thus, the energy in Bm_2 determines the ability of two adjacent channels to provide good performance when the modulation bandwidth is half the channel bandwidth, and the energy in Bm_3 determines the performance of a system where the modulation bandwidth is one third of the channel bandwidth.

For all of the simulation results that follow we compare the carrier to interference ratios (C/I) as the ratio between total signal modulation rms power and total intermodulation rms power in bandwidths Bm_1, Bm_2 and Bm_3. In this manner, one simulation result is sufficient to identify the approximate percentage channel occupancy that yields acceptable intermodulation levels.

All of the simulations are normalized against an arbitrary per carrier symbol rate of fs. Hence, they can be scaled to any specific numerical value. For the analysis we have assumed a FDM mode of transmission. Each carrier modulation signal is $\sqrt{RC}$ Nyquist filtered at 50% excess bandwidth of 3/2 fs. Additionally, each carrier modulation signal is adjusted for full aperture correction at the transmitter in order to compensate for the (sin x)/x spectrum rolloff that is associated with the rectangular shaped source waveforms pulses. For the simulation, we have arbitrarily selected a five carrier model[6], again at some arbitrary symbol rate per carrier given as fs. Five carriers were selected as a computational tradeoff between simulation time and the minimum number of carriers required to examine RF phasing.

---

[5]The channels A and B will later be equated to the 50 kHz channels proposed in Mtel's petition for rulemaking. The "modulation bandwidth" is the region where the MCM carriers described in Mtel's petition for rulemaking are located.

[6]ie, 5 modulated carriers are located within the modulation bandwidth Bm_0. Further simulation has shown that the results presented are very insensitive to the number of carriers assumed, as long as the total bandwidth occupied remains constant.

The analysis focuses on the carrier to interference ratio in adjacent channels - this is the critical factor in determining channel spacing. In a final system design, this must be combined with other sources of impairment to estimate the system performance.

From the preceding, we can note that the carrier to interference within an adjacent channel can be estimated by considering the interference in the occupied signal bandwidths Bm_2 or Bm_3 for the two scenarios proposed. In these cases, it is generally assumed that the adjacent channel receiver includes some form of band restrictive filter that restricts both noise and interference to the necessary bandwidth of the signal modulation. Consequently, we argue that interference estimation based on intermodulation experienced in frequency bands Bm_2 or Bm_3 is a direct measure of interference susceptibility.

1.4 Analysis of performance against emission mask

Emission masks are also frequently proposed as an appropriate technique for the establishment of acceptable spurious emission levels, especially in the case where different modulation schemes are used in adjacent channels. These generally set appropriate interference limits within the occupied signal bandwidth of an adjacent channel, and also place limits on the interference levels generated in the transition band between channels. This report also looks at the ability of MCM to fit the mask proposed in the petition for rulemaking.

1.5 Amplifier models

The nonlinearities that are examined are shown in Figure 2 to Figure 4. These graphs display the single tone zonal AM/AM and AM/PM[7] transfer characteristic of the power amplifier. These are presented referenced against output saturation. Thus, operating levels are given in standard nomenclature format as output backoff (OBO) and corresponding input backoff (IBO).

The transfer characteristics of each are believed to be typical for those of a given class. The Class C nonlinearity (Figure 2) is modelled from data presented in [1]. The Class AB nonlinearity (Figure 3) is taken from measured data performed at MPR Teltech on a proprietary amplifier design. The Class A nonlinearity (Figure 4) is taken from measured data from a high quality commercial amplifier [2].

[7]AM/AM and AM/PM are phenomena within non-linear devices where a desired amplitude modulated [illegible] input produces an undesired amplitude output (AM/AM) or an undesired phase output (AM/PM)

2 SIMULATION DESCRIPTION

The simulation technique employs an analytic signal concept that, in conjunction with the discrete Fast Fourier transform (DFFT) directly addresses the non linearities as presented by Figures 2-4. Thus there is no need to model the measured transfer characteristics with an analytical expression. The technique is extensively used and is described in detail in [3] - [5].

Briefly speaking, it consists of the following:

(i) A random sequence of data pulses is generated in the time domain. This sequence is modulated against a zero frequency carrier and transformed into the frequency domain.

(ii) The modulation signal is appropriately filtered, adjusted for aperture correction and then shifted in frequency to a specified positive value frequency position.

(iii) The procedure is repeated for additional independent random data sequences until all carriers are appropriately mapped into position in the frequency domain.

(iv) Transformation of the composite signal back into the time domain develops in-phase x(t), and quadrature y(t), time samples that represent the complex envelope of the multicarrier signal. Consequently for each time sample the magnitude of the instantaneous envelope can be expressed as:

1. $$\rho = \left[x(t)^2 + y(t)^2\right]^{\frac{1}{2}}$$

Referenced against the IBO of the rms power of the input signal, each time sample value of ρ represents the instantaneous voltage variation of the input signal. Hence for each input ρ value, the zonal AM/AM outputs ($g(\rho)$) and AM/PM ($f(\rho)$) can be computed.

For each value of envelope ρ the functions $g(\rho)$ and $f(\rho)$ represent the amplitude and phase distortion of the non-linearity. Both $g(\rho)$ and $f(\rho)$ are obtained directly from the zonal single frequency transfer function as shown on Figure 2 to Figure 4. Hence in the time domain the distorted output signal is represented by:

2. $$\frac{g(\rho)}{\rho}\{x(t) + jy(t)\}\, e^{jf(\rho)}$$

Applying this distortion adjustment to the time domain waveform samples and subsequently taking the forward DFFT transformation back into the frequency domain yields the output signal and intermodulation spectrum.

To obtain reliable estimates of output power spectra it is necessary to develop a sufficient number of waveform patterns that are representative of random data. Consequently the previous procedure is repeated a number of times and the spectral output is averaged.

For the simulations, IBO and OBO of the MCM output signal is set referenced to the single carrier saturation level. However, for a single tone carrier, only harmonics are generated that can yield fundamental components that introduce compression or expansion of the output. With a multiple tone signal, there are many other types of intermodulation products that develop fundamental distortion. Consequently, the compression/expansion of the multiple carrier signal will differ from that of a single carrier signal. OBO, as stated on the simulation presentation results, is computed following completion of the simulation. In general multicarrier OBO represents a fractional dB difference from that expected from a single carrier.

3 RESULTS PRESENTATION

3.1 Summary and order of presentation

As an introduction, section 3.2 discusses the model used in the simulations.

Section 3.3 discusses the performance of Class C amplifiers, and concludes that they will not provide the performance needed.

Section 3.4 shows the results for Class AB amplifiers, and section 3.5 presents the results for Class A amplifiers.

Section 4 will interpret these results as they apply to Mtel's proposals.

3.2 Simulation model

In the simulation, MCM using 5 modulated carriers was used. The choice of 5 modulated carriers as a diagnostic test signal is based on computational convenience, and the need to develop a test signal that is representative of a broad class of modulation inputs that occupy a given bandwidth. This latter objective was confirmed as demonstrated by subsequent simulations.

3.3 Class C Simulation

As expected, preliminary simulations with the Class C nonlinearity displayed IM spectra that can only be described as grossly excessive. We will therefore dispense with this nonlinearity without presentation of any simulation results.

3.4 Class AB Simulations

Figure 5 and Figure 6 display simulation results for the Class AB nonlinearity for 5 modulated BPSK carriers and at nominal OBO's of 5 dB and 8 dB respectively. In general, we expect close in IM to dominate due to the preponderance of $A \pm B \mp C$ and $2A \pm B$ intermodulation products. However, in a Class AB amplifier, all orders of distortion contribute significantly to these products. Consequently, as a function of variation in IBO/OBO the change in relative intermod level is not as uniform as that of a Class A amplifier. Generally, one finds that the C/I ratio does not improve dramatically with increase in OBO. For instance, in bandwidth Bm_2, there is only a 2.1 dB improvement in C/I for a 3 dB increase in OBO.

Additional simulations (not shown), indicated no discernable change in IM levels with RF phasing of the carriers. This was examined further for the amplitude shift keying technique (MOOK). Figures 7 and 8 illustrate five carriers at a composite 8 dB OBO level in conjunction with the Class AB nonlinearity.

For MOOK, the time domain level shifting introduces a dc bias and the frequency domain signal is composed of equal amounts of unmodulated carrier and sideband power. Figure 7 displays the worst case for synchronously phased carriers. Here, the carrier beat products are still significant in the adjacent bandwidth Bm_1. Figure 8 displays the spectrum with RF Phasing. As expected, the carrier beat signals are significantly reduced, however there is a negligible change of IM level in adjacent channel bandwidths Bm_2 and Bm_3. Table I summarizes the computed IM levels for the Class AB simulations discussed above.

Modulation	IBO (dB)	OBO (dB)	OBO Adjusted (dB)	C/I in Referenced Bandwidth (dB)		
				Bm_1	Bm_2	Bm_3
5-BPSK	7.65	5	5.41	27.4	43.9	54.8
5-BPSK	10.6	8	8.09	35.4	46.0	56.7
5-MOOK SYNC	10.6	8	8.61	32.4	46.2	56.0
5-MOOK RF PHASED	10.6	8	8.3	36.1	47.7	57.7

TABLE I - Intermodulation Levels for a Class AB Nonlinearity

3.5 Class A Simulations

Figures 9 and 10 display the results of 5 dB OBO and 8 dB OBO simulations for the Class A nonlinearity. These are directly comparable to the Class AB simulations shown on Figures 5 and 6. The Class A simulations are noticeably worse in the first adjacent bandwidth Bm_1 and noticeably better in bandwidths Bm_2 and Bm_3. The improvement is accentuated in Bm_2 and Bm_3 as OBO is increased.

The introduction of orthogonal modulation allows for a doubling of transmission rate in a given bandwidth. Figure 11 displays this situation whereby the baseband modulation signals have been altered to be 4-level, thus generating QPSK carriers. A comparison of Figure 9 and Figure 11 indicates that the IM structure is virtually unchanged. Figure 12 presents an example for offset-keyed QPSK carriers. In this case, the envelope variation

of each carrier is restricted to be less than 3 dB. For the selected OBO of 8 dB, a comparison against the BPSK case of Figure 10 indicates no discernable change in IM levels.

Finally, Figure 13 examines whether or not the number of frequency components associated with 5 carriers is sufficient to characterize the nonlinearities. Here 10 BPSK carriers have been generated and input to the Class A nonlinearity at 8 dB OBO. IM levels in bandwidth Bm_1, to Bm_3 are within 1 dB of the 5 carrier case illustrated on Figure 10.

Table II summarizes the computed IM levels for the Class A simulations discussed above.

Modulation	IBO (dB)	OBO (dB)	OBO Adjusted (dB)	C/I in Referenced Bandwidth (dB)		
				Bm_1	Bm_2	Bm_3
5-BPSK	9.2	5	5.45	23.0	47.2	59.0
5-BPSK	12.3	8	8.16	28.0	56.0	62.6
5-QPSK	9.2	5	5.45	23.0	47.3	59.2
5-OQPSK	12.3	8	8.13	29.0	57.2	63.1
10-BPSK	12.3	8	8.17	27.0	55.0	62.1

TABLE II - Intermodulation Levels for a Class A Nonlinearity

4 DISCUSSION

4.1 Adjacent channel performance of MCM schemes

The results in Tables I and II allow us to evaluate the expected performance of adjacent NWN channels under the two scenarios of the modulation bandwidth occupying half and one third of the channel width.

To evaluate the acceptable performance of the NWN system, it is necessary to define the carrier to interference ratios needed within the adjacent channel modulation bandwidth. This number will depend on the exact modulation scheme used and system design, but will be assumed to be 50 dB or greater.

Examination of Tables I and II indicates that for Class AB transmitter operation these levels are achieved only in the Bm_3 bandwidth. Hence, such operation would allow for a modulated spectrum utilization of approximately 1/3 of the channel bandwidth. For Class A operation Table II indicates that a modulated bandwidth utilization of 1/2 is achievable at an OBO of 8 dB.

4.2 Numerical examples and conformance to proposed mask

To proceed further, it is necessary to use numerical values. We do this in the context of the intermodulation characteristics given by Figure 10, and using the mask proposed by Mtel. The following parameters and numerical values were used:

(i) Each modulated carrier is positioned at multiples of 3/2 fs and the centre frequency of the channel is therefore fc = 4.5 fs.

(ii) The occupied bandwidth of each carrier is 3/2 fs. Hence for 5 carriers, the total modulated spectrum occupies Bm = 7.5 fs.

(iii) The frequency resolution of the spectrum plots is fr = fs/16.

(iv) We set fs = 3 kHz (i.e. equivalent to a symbol rate of 3 ks/s per carrier); then the offset frequency scaling is in 3 kHz increments, as measured from the channel centre at 4.5 fs. This is equivalent to a binary system operating at a throughput rate of 15 kb/s. Also Bm = 22.5 kHz and the channel occupancy is therefore 45%. The corresponding frequency resolution is 187.5 Hz.

To transform the standard instrumentation bandwidth for the mask (300 Hz) to the spectral resolution bandwidth[8] therefore requires a correction of 2 dB[9]. Adjusting for the composite channel power at 8 dB0 results in the total adjustment of 10 dB. Hence, a -70 dB mask limit will be located at an ordinate scale of -70-8-2 = -80 dB OBO. The composite mask overlay is shown on Figure 14, where it can be seen that the signal emissions fall within the mask.

4.3 Opportunities for further capacity improvements

The following discusses techniques whereby more carriers could be fitted within the spectrum available. It is independent of techniques which would increase the data carrying capacity of each carrier (e.g. multi-level modulation or orthogonal modulation).

4.3.1 Linearization

If utilization of a larger percentage of the channel bandwidth and/or transmitter efficiency is desired, then linearization is mandated. Conventional cubic pre-distortion [7] is likely unsatisfactory. Our prior simulation effort has demonstrated that it would be ineffective with a Class AB nonlinearity. Further, it would only address those 3rd order components that fall in the Bm_1 bandwidth for a Class A nonlinearity. Other linearization techniques offer more promise. These include memory-mapped predistortion, feedback and feedforward [8] - [12]. These are currently the subject of significant research and development effort. **Intermodulation levels below -60 dBc have been reported which would exceed the assumed requirement. The availability of such devices [13] would allow an increased percentage bandwidth utilization and hence increased throughput.**

MPR was unable to simulate any of the linearization techniques as part of this study. To be meaningful, such a simulation must model all of the linearizer imperfections and is beyond the scope of this study. **However, the claims made by the vendor quoted above would appear to be consistent with 24000 bits per second transmission.**

---

[8]The instrumentation bandwidth is the bandwidth of a spectrum analyzer used for compliance testing. The spectral resolution bandwidth is the simulation equivalent.

[9] $10 \log\left(\frac{187.5}{300}\right) = -2\ dB$ For noise like signals, such as intermodulation products, the total measured power is proportional to the bandwidth in which it is measured

4.3.2 Orthogonal[10] placement of carriers

As an alternative to utilizing a larger percentage of the channel bandwidth, the same percentage can be utilized more efficiently. One technique to achieve this objective would be to use orthogonal placement of the carriers. For example, in a binary orthogonal system, the prior discussed occupancy of 22.5 kHz could yield 22.5 kb/s of data. Significant subsequent study is required in order to determine if orthogonal transmission is practical in the presence of the simulcast multipath delay spread.

[10]The term orthogonal is applied here to the spacing of adjacent carriers. It is also used elsewhere in this report to describe modulation of a single carrier with in-phase and quadrature signals which are independent, and hence "orthogonal".

REFERENCES

[1] L.C. Palmer and S. Lebowitz, "Computer Simulation of Solid-State Amplifiers", Comsat Tech. Rev., Vol. 8, No. 2, pp 371-403, Fall 1978.

[2] Private Correspondence, C. Loo, (CRC) to G. Acres (MPR), Nov. 13, 1981.

[3] C. Loo, "Calculations of Intermodulation Noise Due to Hard and Soft Limiting of Multiple Carriers", IEEE Int. Conf. on Comm. - Conf. Record, pp 3A1-3A4, 1974.

[4] C. Loo, "Calculation of the Suppression of Signals and Intermodulation Noise when Multiple Unequal Carriers are Amplified by a TWT", Can. Elec. Eng. J., Vol. 2, No. 4, pp 29-32, 1977.

[5] C. Loo and S.M. Chow, "Computer Simulation and Experimental Studies of the Performance of a 2Φ-DPSK Modem Over a Satellite Channel", CRC Tech. Note No. 675, Sept. 1975.

[6] L.J. Greenstein and P.J. Fitzgerald, "Phasing Multitone Signals to Minimize Peak Factors", IEEE Trans. on Comm., Vol. COM-28, No. 7, pp 1072-1074, July 1981.

[7] R.P. Hechen and R.C. Heidt, "Predistortion Linearization of the AR6A Transmitter", IEEE Int. Conf. on Comm., Comm. Record, pp 3A1-3A4, 1974.

[8] V. Akaiwa and Y. Nagata, "Highly Efficient Digital Mobile Communications with a Linear Modulation Method", IEEE Journal on Sel. Areas of Comm., Vol SAC-5, No. 5, pp 890-895, June 1987.

[9] J.K. Cavers, "Amplifier Linearization using a Digital Predistorter with Fast Acquisition and Low Memory Requirements", IEEE Trans. on Vech. Tech., Vol. 39, No. 4, pp 374-382, Nov. 1990.

[10] S.P. Stapleton and F.C. Costescu, "An Adaptive Predistorter for a Power Amplifier Based on Adjacent Channel Emissions", IEEE Trans. on Vech. Comm., Vol. 41, No. 1, pp 49-55, February 1992.

[11] A. Bateman, D.M. Haines and R.J. Williamson, "Linear Transceiver Architectures", IEEE Vech. Tech. Conf., Conf. Record, pp 478-484, 1988.

[12] S. Kumar, "Power Amplifier Linearization Using MMICs", Microwave Journal, pp 96-104, April 1992.

[13] Motorola Semiconductor; Product Preview Data Sheet, The RF Line Feedforward Amplifier, XPA900-53-100.

GLOSSARY

AGC	Automatic Gain Control
AM/PM	Amplitude Modulation to Phase Modulation
AWGN	Additive White Gaussian Noise
BPSK	Binary Phase Shift eying
C	Carrier
C/I	Carrier to Interference
C/N	Carrier to Noise
dB	deciBel
dBc	deciBels referenced to carrier power
D_{jpp}	peak to peak time jitter difference
DFFT	Discrete Fast Fourier Transform
FDM	Frequency Division Multiplexing
HF	High Frequency
Hz	Hertz
I	Interference
IBO	Input Backoff
IM	Intermodulation
kb/s	kilobits per second
kHz	kiloHertz
MCM	Multi-Carrier Modulation
MOOK	Multitone On-Off Keying
MPTONES	Multiple Tones
msec	milliseconds
N	Noise
NWN	Nationwide Wireless Network
OBO	Output Backoff
OQPSK	Offset Quadrature Phase Shift Keying
PA	Power Amplifier
PFSK	Permutation Frequency Shift Keying
PM/PM	Phase Modulation to Phase Modulation
Pwr	Power
QASK	Quadrature Amplitude Shift Keying
QPSK	Quadrature Phase Shift Keying, 4-level PSK
RC	Raised Cosine
RF	Radio Frequency
SQAM	Staggered Quadrature Amplitude Modulation

SSPA	Solid State Power Amplifier
SYNCH	Synchronized
T_s	Symbol Period
UHF	Ultra High Frequency
usec	microseconds

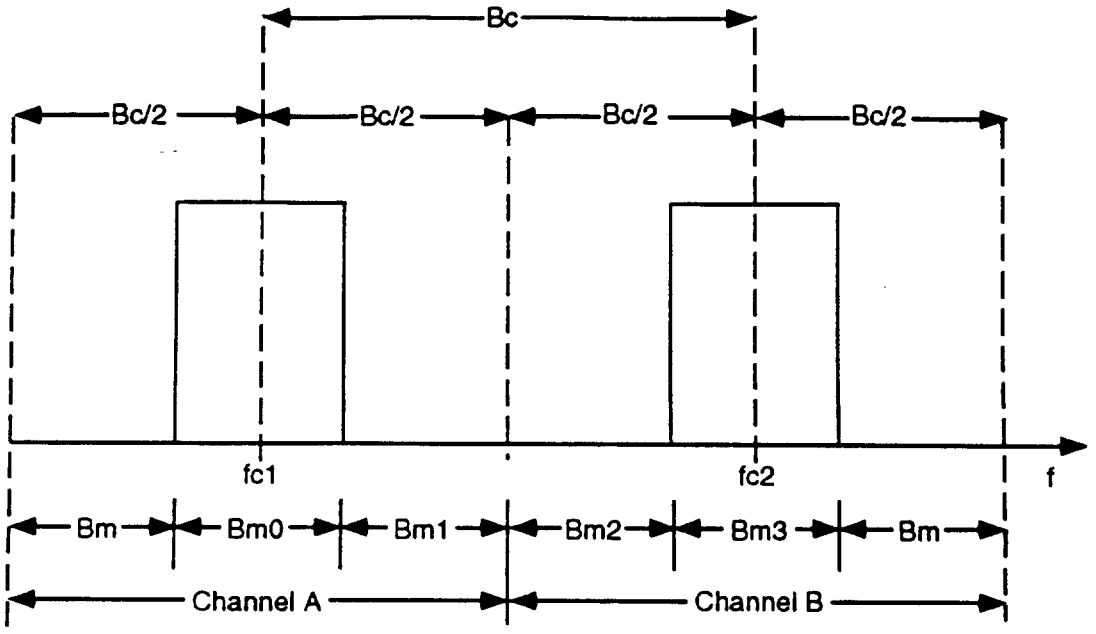

(a) Channel Occupancy for Bm=Bc/3

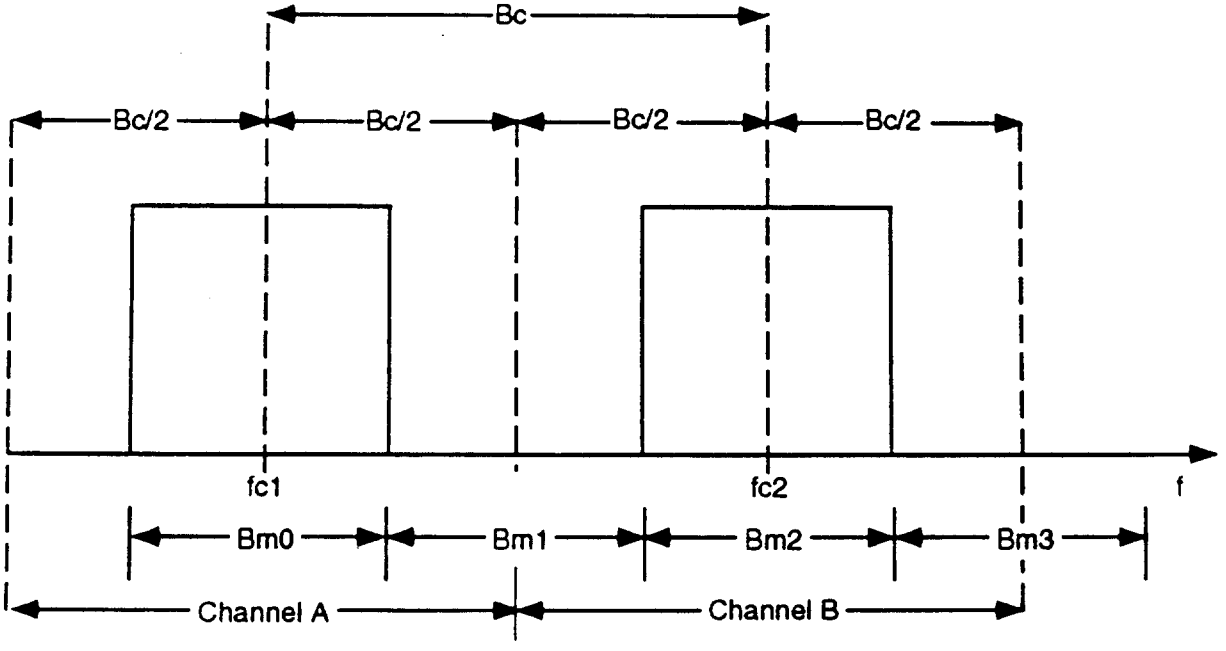

(b) Channel Occupancy for Bm=Bc/2

Figure 1: Channel Occupancy vs Channel Separation

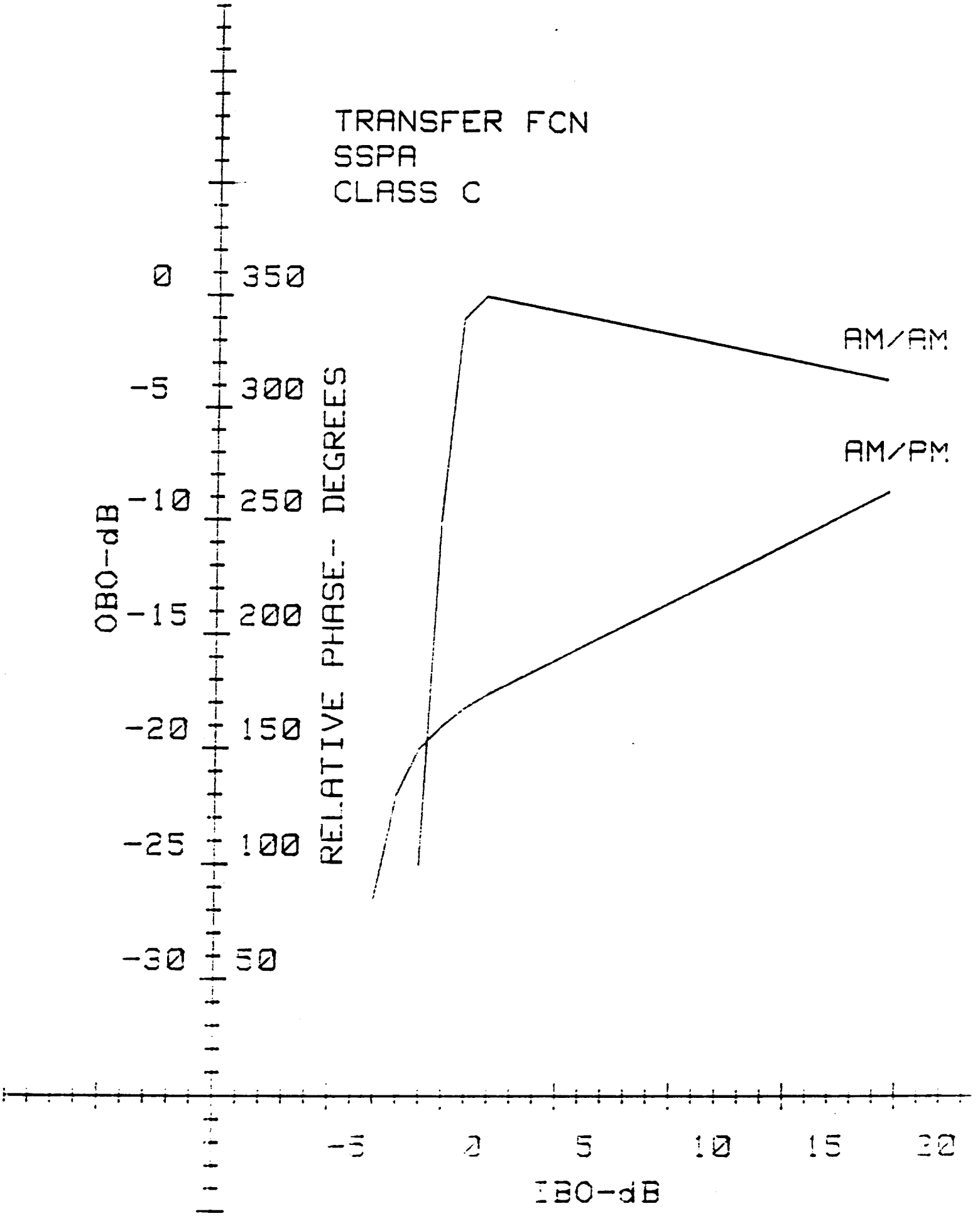
TRANSFER FCN
SSPA
CLASS C
AM/AM
AM/PM
OBO-dB
RELATIVE PHASE- DEGREES
0
-5
-10
-15
-20
-25
-30
350
300
250
200
150
100
50
-5
0
5
10
15
20
IBO-dB

FIGURE 2

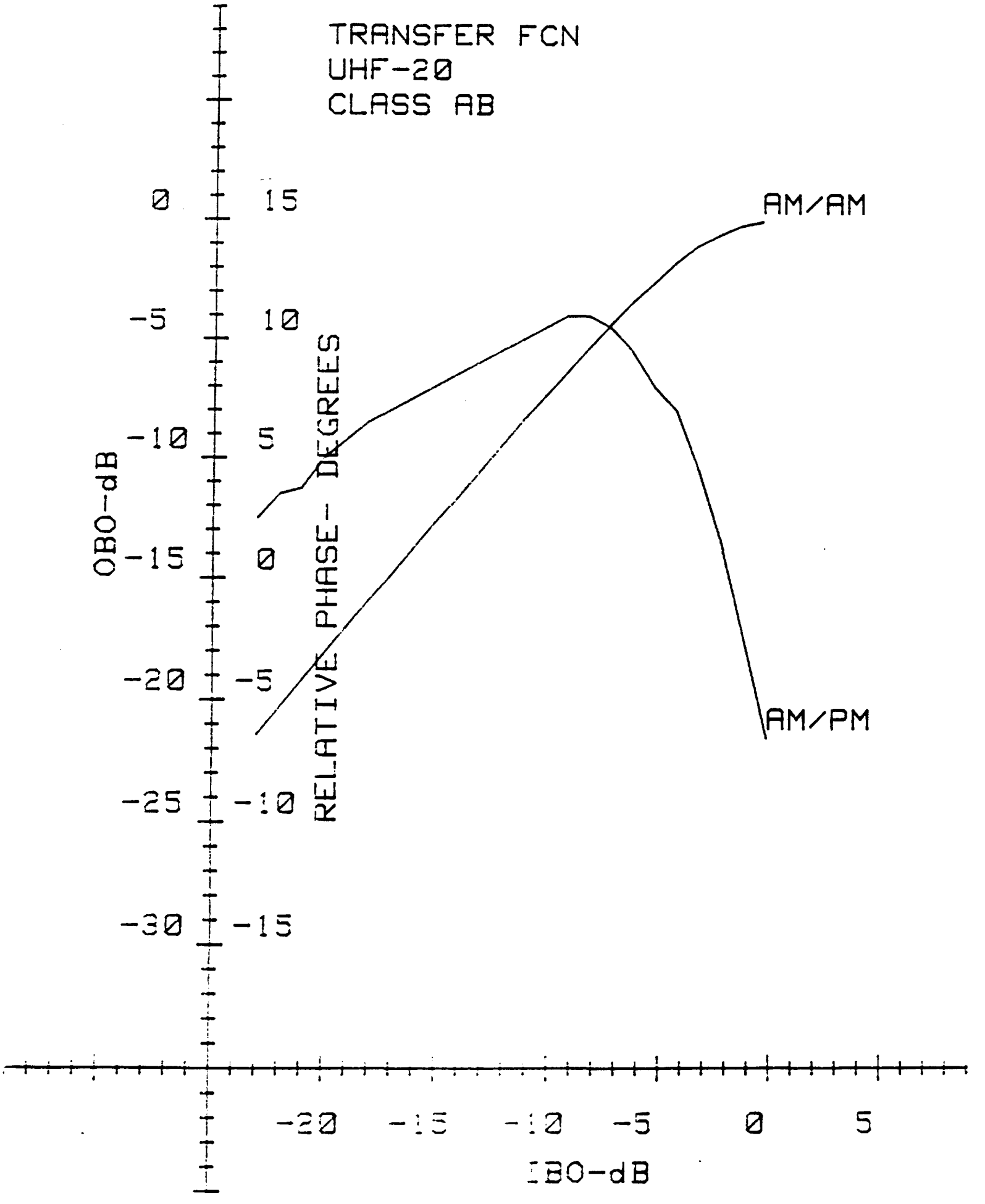
TRANSFER FCN
UHF-20
CLASS AB
AM/AM
AM/PM
OBO-dB
RELATIVE PHASE- DEGREES
IBO-dB
0
-5
-10
-15
-20
-25
-30
15
10
5
0
-5
-10
-15
-20
-15
-10
-5
0
5

FIGURE 3

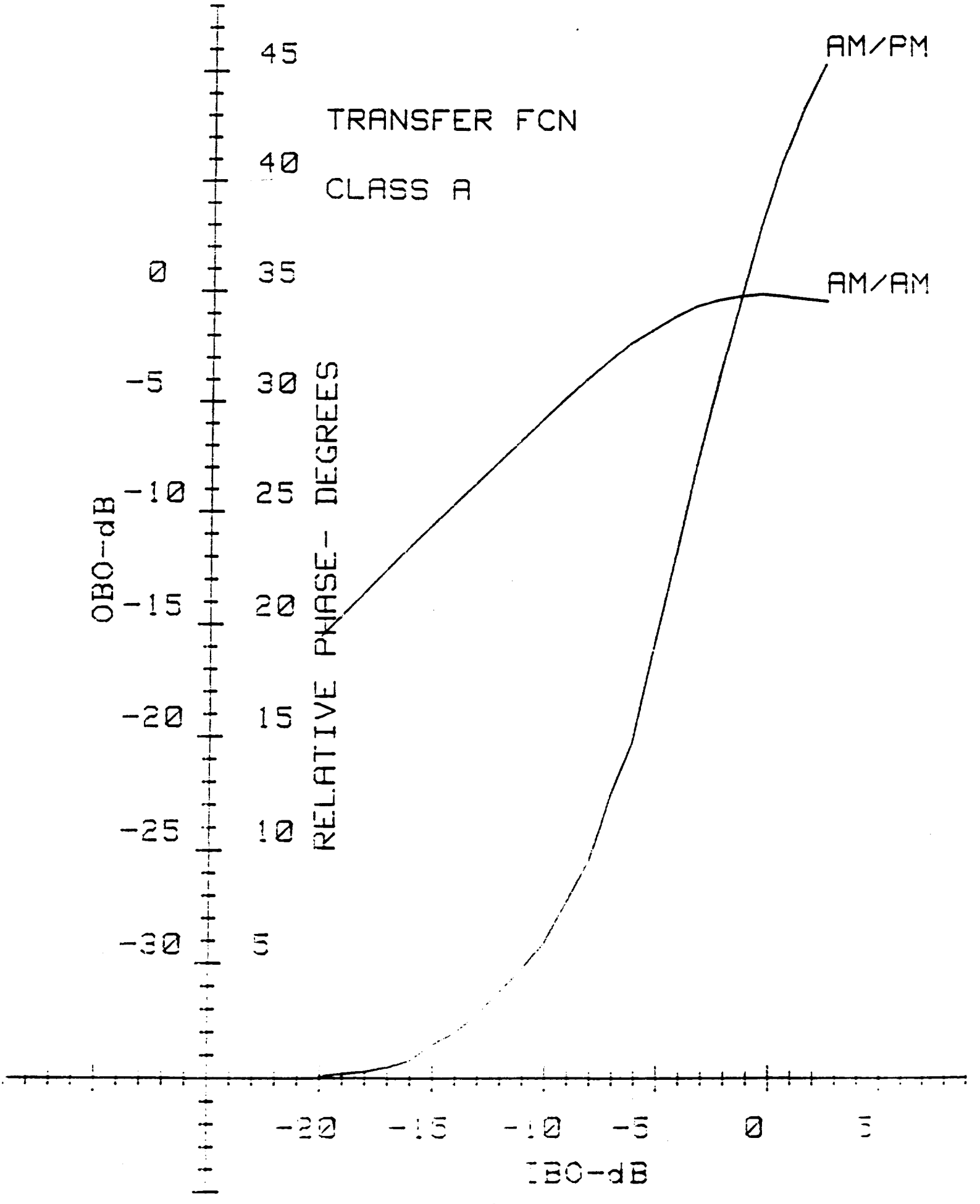
TRANSFER FCN
CLASS A
AM/PM
AM/AM
OBO-dB
RELATIVE PHASE- DEGREES
IBO-dB
0
-5
-10
-15
-20
-25
-30
45
40
35
30
25
20
15
10
5
-20
-15
-10
-5
0

FIGURE 4

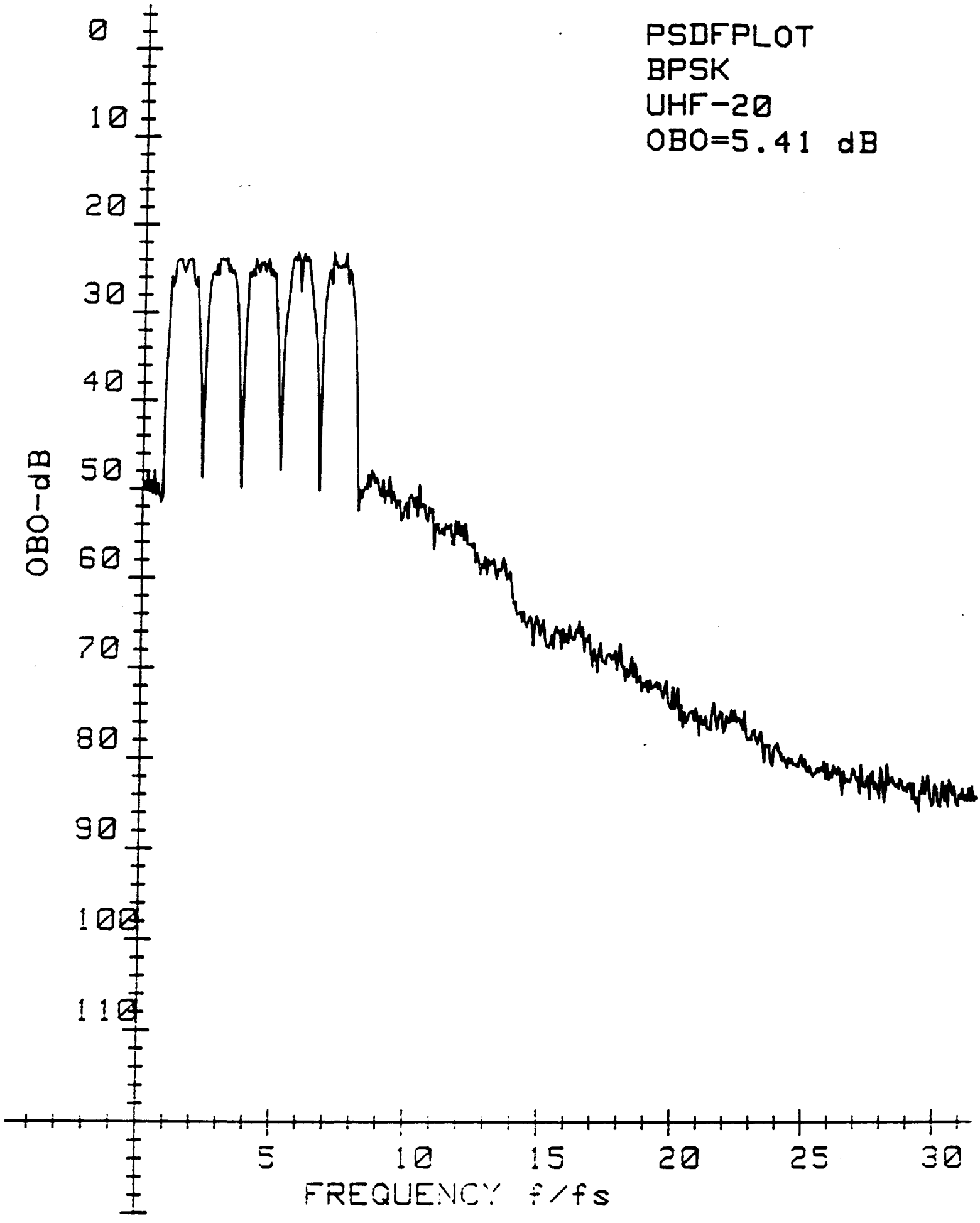
PSDFPLOT
BPSK
UHF-20
OBO=5.41 dB
OBO-dB
0
10
20
30
40
50
60
70
80
90
100
110
5
10
15
20
25
30
FREQUENCY f/fs

FIGURE 5