1978-1983
Interdiscom Systems Ltd.
Montreal, PQ and Winnipeg, Manitoba, Canada

- Vice-President, Engineering

  - Set up originally as a consultancy (trading as Coyne Associates), Interdiscom designed integrated voice, video and data delivery systems based on fibre optics and coaxial cable for Canstar. In 1979 it bid and won the contract to implement such a system for Manitoba Telephone System. The project - Project Ida - involved the design and implementation of some 30 different PCB assemblies including RF amplifiers, video channel converters for hostile environments; telephone interfaces; line cards to interface to class 5 switches. Also delivered an IBM Series 1 based alarm reporting system designed and implemented in-house.

1975 - 1978
Bell Northern Research
Montreal, PQ, Canada

- Member of Technical Staff

  - Led project on application of fibre optics to rural telecommunications - a study that resulted in the funding of the Elie, Manitoba fibre optics trial successfully bid by Northern Telecom. Also worked on coaxial cable broadband systems.

1972 - 1975
Plessey Telecommunications Research,
Taplow Court, UK

- Senior Engineer

  - Participated in studies on application of fibre optics to telecommunications systems - then a research topic.

Professional Affiliations:

- Association of Professional Engineers of British Columbia, Registered Professional Engineer

Papers Authored/Co-Authored:

- Sole inventor on patent for wavelength division multiplexing in fibre optics systems awarded to Northern Telecom in 1979.

- Several publications and invited talks: separate list available

---

Other Professional Activities

- Chairman, International Conference on Selected Topics in Wireless Communications, 1992

- Member, Canadian Institute of Telecommunications Research steering group on wireless communications

- Member, (Canadian) National Science and Engineering Research Council evaluation team for new wireless profession chair

- Member, B.C. Science Council technical review committee on electronics and communications

Resume

MICHAEL R. WALKER

Citizenship:

Canadian

Education:

B.A.Sc., Electrical Engineering, 1978, Queen's University
Graduate Courses, Systems and Computing Science, 1979-1981, Carleton University
Graduate Courses, Communications Engineering, 1985-1990, Simon Fraser University

Non Credit Courses

The Quality Advantage, MPR Teltech Ltd., 1992
Introduction to Structured Methods, Motorola Inc., 1990
Design for Manufacture, Motorola Inc., 1990
Mobile Communications Engineering, George Washington Univ., 1988
Project Management, Philip B. Beynon & Assoc., 1987
Surface Mount Technologies, Philips Corporation, 1984
Flat Panel Displays, University of Wisconsin, 1983
Interpersonal Managing Skills, Xerox Corporation, 1982

Experience:

1991 - Present
MPR Teltech Limited
Burnaby, BC

- Manager, Wireless Access

  - While at MPR, I have managed a group involved with the research, prototyping and field trialing of wireless access systems and products utilizing Infrared and Direct Sequence Spread Spectrum over RF as the "Wireless" technology. The work involved is at both a systems analysis and requirements level and an end-user device implementation level.

1984 - 1991
Motorola Corp.
Mobile Data Division
Richmond, BC

- Product Manager: Strategic Products, 1991; Director: Hardware Development, 1990-91; Manager: Hardware Development, 1989-90; Manager: Digital Products Development, 1988-89; Manager: Network Products Development, 1987-88; Manager: Systems Technology, 1985-87; Section Head: Hardware Development, 1984-85; Senior Engineer, 1984

  - While at MDD, I had the opportunity to be accountable for a large number of job functions and deliverables. The activities associated with these tasks can, in general, be summarized into six categories:

    Product Management: P&L responsibilities for new portable and mobile RF data modem and terminal products for Europe and North America.

    Product Development Strategies and Tactics: Generation of technology roadmaps, product plans, business plans and development budgets.

    Department Management: Management of multi-discipline system and product development groups which include system analysis and architectures, digital and analog electrical design, rf design, DSP design, industrial design, mechanical design and product support groups.

    Project Management: Management of product development projects, spanning multiple disciplines, including manufacturing introduction into factories located in North America, Japan and Singapore.

    Mobile Data Systems: Design analysis and support of mobile data network architectures and systems.

    Product Design: Products include mobile data terminals and modems, portable data terminals and modems and multi-processor data communication controllers.

1979 - 1984
Mitel Corporation
Telecom and IBS Divisions
Kanata, Ontario

- Manager: Console Development, 1983-84; Project Leader, 1982-83; Design Engineer, 1980-82; Product Engineer, 1979-80

  - While at Mitel, I was involved with a number of activities and products. These included:

    - PABX console/workstation - requirements capture, hardware and firmware design and project management.

    - consumer product design - system and hardware design as well as project management

    - ULA/custom I.C.'s - specification, design, simulation and testing

    - multi-processor real-time processing designs - hardware and firmware design

    - analog design of line and trunk circuits for a variety of telecom products

    - solving manufacturing and field problems for a variety of telecom products

1978 - 1979
Bell Northern Research (BNR)
Ottawa, ON

- Member of Scientific Staff 1978 - 1979

  - At BNR, I was a member of one of three application software design groups for the SL-10 Data Switch project; a data switch used for packet switching networks such as Bell Canada's DATAPAC. My particular duties included software support of a LAPB X.25 tester and the design of software modules to support call processing.

Professional Affiliations:

Member, IEEE

Papers Authored/Co-Authored:

- "Measurements and Field Trial Results of a Wireless Telephone System Using Direct Sequence Spread Spectrum ISM Band Radios", W.D. Warner and M.R. Walker, MPR Teltech Ltd., IEEE Wireless '92 Conference, July 8, 1992, Calgary, Alberta.

- "A Multi-Channel Infrared Telephone Demonstration System for Public Access Applications", R.L. Poulin, D.R. Pauluzzi, and M.R. Walker, MPR Teltech Ltd., IEEE International Conference on Selected Topics in Wireless Communications, June 25, 1992, Vancouver, BC.

- "Mobile Network Architecture", G.W. Kenward, Linh Vuong, W. Waung and M. Walker, Mobile Data International, Canadian Journal Elect. & Comp. Eng., Vol. 14, No. 3, 1989.

- "Time Slotted Cellular Systems", J.K. Cavers, Simon Fraser University and M. Walker, Mobile Data International, IEEE Vehicular Technology Conference, May 20, 1986, Dallas, Texas.

Patents Pending:

- Motorola Patent: A Power Consumption Reduction Scheme for Portable RF Data Terminals.

TAB E

Exhibit E

NWN ARCHITECTURE & CONTROL

June 1, 1992

David Ackerman
Dennis Cameron
Masood Garahi
Walt Roehr
Dr. John Colonius
Dinesh Sheth
Samer N'Ser
Dr. Rade Petrovic

Mtel Technologies
Advanced Technology Center
188 East Capitol Street, Suite 1450
Jackson, Mississippi 39201

Table of Contents

1 Network Architecture and Control Overview 1
- 1.1 Overview of the Transmission Facilities 1
- 1.2 Overview of the Control 2
- 1.3 User Interfaces 2
- 1.4 Report Organization 2

2 NWN Control 3
- 2.1 Centralized Management of Resources 3
- 2.2 The Intelligent Network 19

3 System Interfaces 23
- 3.1 NOC to E-mail Gateways Interface 23
- 3.2 NOC to Computers Interface 23
- 3.3 NOC to End User Interface 24
- 3.4 Interconnection to Other Networks 24

4 Transmission 25
- 4.1 RPSC (Return Path Sub-Controllers) 25
- 4.2 Links and Protocols 29

Attachment 1 -- NWN Operations 33

A1 Administrative System 33
A2 Network Management 35
A3 System Maintenance 40
A4 Security 40
A5 Reliability 41
A6 Availability 42

1 Network Architecture and Control Overview

Delivering two-way message service to small, low power-demand portable terminals carried by a large number of the general public, in an economic and spectrally efficient manner, requires a tightly integrated system architecture. Mtel knows how to build nationwide systems of this complexity -- it learned these lessons while building the U.S. SkyTel™ and international one-way messaging systems, air to ground operations, and its recent experience in AMSC.

The NWN system can best be understood by considering three separate subsystems:

- CONTROL -- the computers, software, and procedures that insure that all of the system's assets are properly managed to provide most economically the level of services needed.

- USER INTERFACES -- all of the means that both radio and non-radio users employ to obtain services from the NWN.

- NETWORK -- the transmission nodes, links, protocols, and procedures used for delivering information.

This report covers the innovative architecture Mtel has developed to integrate all of these aspects. Particular emphasis is placed on the Control and User Interfaces portions. While details of the transmission innovations are found in other portions of the Technical Feasibility Demonstration, a brief overview of the transmission system provides a background for the functions that are described.

1.1 Overview of the Transmission Facilities

Within the Network there are five major transmission nodes:

- The transmission portions of the Network Operations Center (NOC) including the (possibly remote) satellite transmit up-link stations

- The Transmitter Base Stations that receive satellite downlink bit streams (downlink) and relay the traffic over the associated 930 MHz radio links

- The User Terminals that are actively involved in all NWN transmissions, since the only return path to the NOC for routine traffic (including acknowledgments) is via a User Terminal;

- The Receiver Base Stations that collect the User Terminal transmissions and relay them back toward the NOC;

- The Return Path Sub-Controllers that act as concentrators, collecting traffic from a number of Receiver Base Stations and forwarding the traffic to the NOC over high speed point-to-point links.

Transmission links with distinct characteristics and different protocols are used between each of these physical entities. The two forward links (NOC to Base Transmitter and Base Transmitter to Portable Terminal) and the first reverse link (Portable Terminal to Receivers) are uni-directional -- there are no associated transmissions in the opposite directions. Rather, "return" traffic (e.g., acknowledgements, portable initiated messages) continues around the uni-directional loop. Additional dial-up control links are established, as needed, by the NOC to any of the components for fault management, diagnostics and re-configuration. The remaining two links (Base Station Receiver to RPSC and RPSC to NOC) use bi-directional terrestrial transmission but the NOC-RPSC-Receiver direction is only used for management and control.

1.2 Overview of the Control

Centralized management of the NWN resources by the NOC provides the highest level of spectral efficiency. The aggregation of system status information, asset control power, user message input/output processes, databases containing user profiles and network performance statistics in a duplexed backed-up complex[1] provides an unsurpassable capability. Network availability is insured by geographically separating the back-up complex from the prime complex and providing an extensive set of network management tools.

These physical assets are logical components of an Intelligent Network, with the Service Management, Service Control, Intelligent Peripheral, and Service Node/Access Point functions explicitly identified and logically partitioned from each other.

1.3 User Interfaces

All of the interfaces to the universe outside the NWN are at the NOC or at the user terminals.

1.4 Report Organization

The remainder of this Report is organized as follows:

---

[1] Both locations, "prime" or "back-up," are fully redundant within themselves with the ability to automatically reconfigure internally should any one of the redundant systems fail.

2.0 **Control** -- discusses the rationale for the highly centralized NWN control and the application of the Intelligent Network paradigm before the Physical Components are introduced. This section concludes with two examples of the power of centralized control: Adaptive Registration and Dynamic Zone Allocation -- functions that would be impossible to implement on a distributed basis.

3.0 **Interfaces** -- discusses how users of the NWN, both wireline and radio, interact with this pioneering, spectrally efficient service to small, low power portables.

4.0 **Transmission** -- briefly discusses the physical components used within NWN and then goes on to consider the protocols used on each of the transmission links.

2 NWN Control

NWN requires a control capability that is taut, so that the resources (spectrum, landlines, satellite links, processing power, and information storage capabilities) are efficiently used, and yet flexible, so that growth (number of subscribers, volume of traffic, number of services) can be accommodated. Resolving the inherent conflict between "taut" control and "flexible" control has been accomplished by adopting a pair of complementary guiding principles:

CENTRALIZATION OF CONTROL FUNCTIONS SHALL BE MAXIMIZED;

THE AXIOMS OF THE INTELLIGENT NETWORK, CURRENTLY BEING ADOPTED IN PUBLIC TELEPHONE SYSTEMS THROUGHOUT THE WORLD, SHALL, TO THE EXTENT POSSIBLE, BE USED IN STRUCTURING THE CONTROL OF THE NWN.

Principle 1 provides the taut control: information is concentrated in a single (replicated for reliability) control complex. Principle 2 provides the structured modularity of functions to accommodate growth. Together they resolve the conflict.

2.1 Centralized Management of Resources

The NWN system architecture (shown in Figure 1) is based on central control. It consists of a centralized Network Operation Center (NOC) and several Return Path Sub-controllers (RPSCs), which would be employed on the inbound return path. The need for RSCs will depend on traffic, performance, cost and administrative concerns. Figure 2 expands the detail of Figure 1.

Figure 1: NWN System Architecture

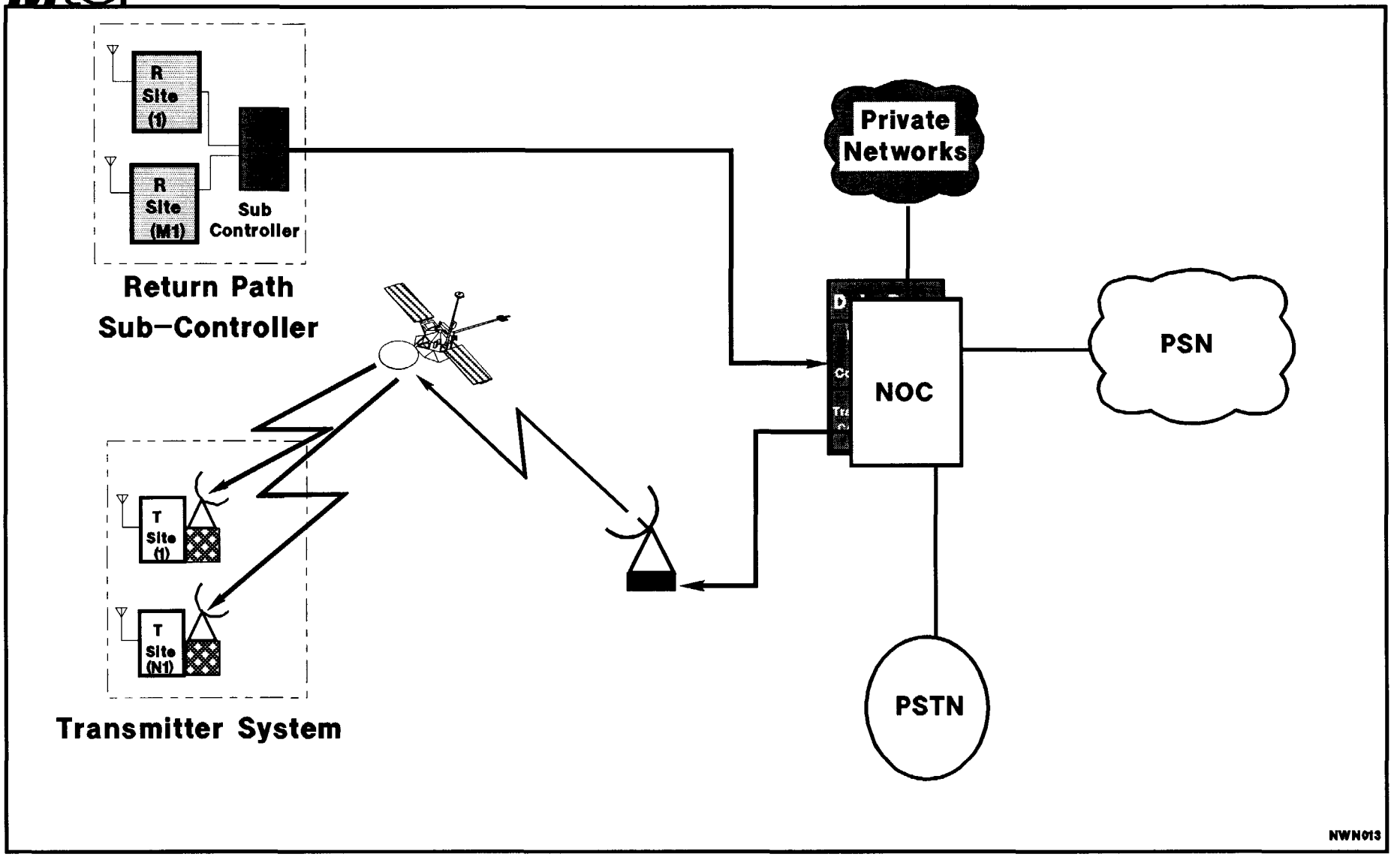

Figure 2: NWN System Architecture

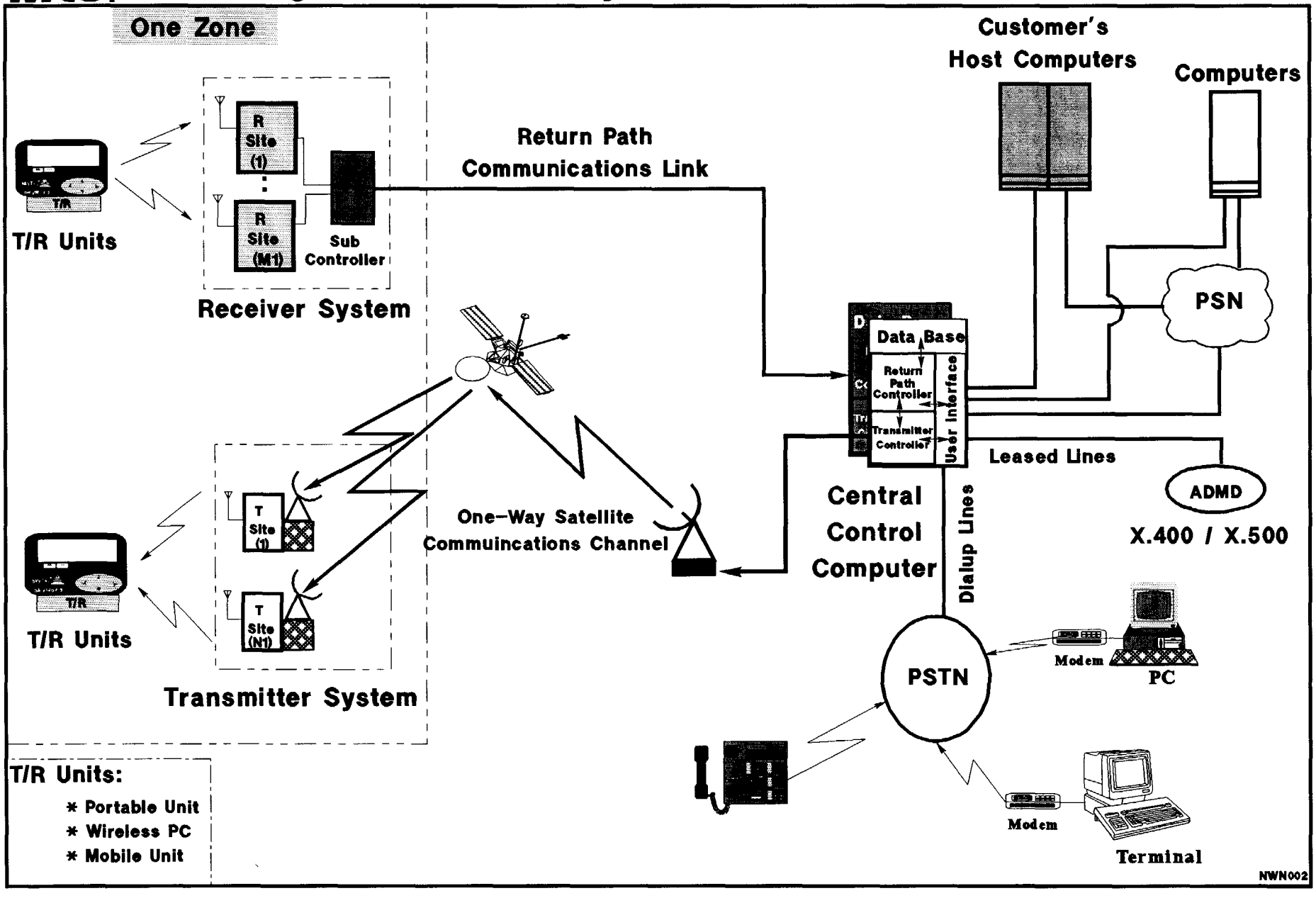

The NOC acts as the nucleus of the NWN system. This central architecture allows for improved quality and reliability of services as well as reduced cost of operations. The lesson learned from Mtel's successful experience in numerous nationwide paging systems (both in the U.S. and internationally) is that a central point architecture is the most feasible for an advanced messaging system like NWN. NWN will employ a centralized network in order to benefit from:

- Centralized allocation of two shared resources:
  - -- Satellite bandwidth
  - -- Nationwide transmission capacity
- Simplified network operations and maintenance
- Flexibility in interfacing with customers, computers and communications equipment
- Increased reliability and availability of the system
- Reduced operations costs
- Expedited system deployment

The aggregation of as many functions as possible in the NOC has major advantages in the operation, administration, and maintenance of the hardware. It also greatly reduces the complexity of the software, and will result in a much more rapid deployment of the system. Because NWN is a message store-and-forward system, the delay with which a message is accepted by the central controller or portable terminal, while important, is not critical because the system is not required to support real time interactive operations.

2.1.1 NOC (Network Operations Center)

The NOC is a computer based operations center and the heart of the NWN operations (Figure 3). The NOC will run system related applications to manage:

- Network transmitter and receiver management
- Protocol conversion
- Operational tools to manage system wide resources like satellite bandwidth, data line bandwidth, telephony front end equipments, etc.
- System configuration
- Zonal definitions
- Adaptive registration of subscribers for zone to zone
- Return Path Sub-controllers
- Data processing
- Security
- Billing transaction generation and accounting
- Satellite interfacing and queues
- Fault detection
- Subscriber configuration

Mtel

Figure 3: NOC Physical Layout

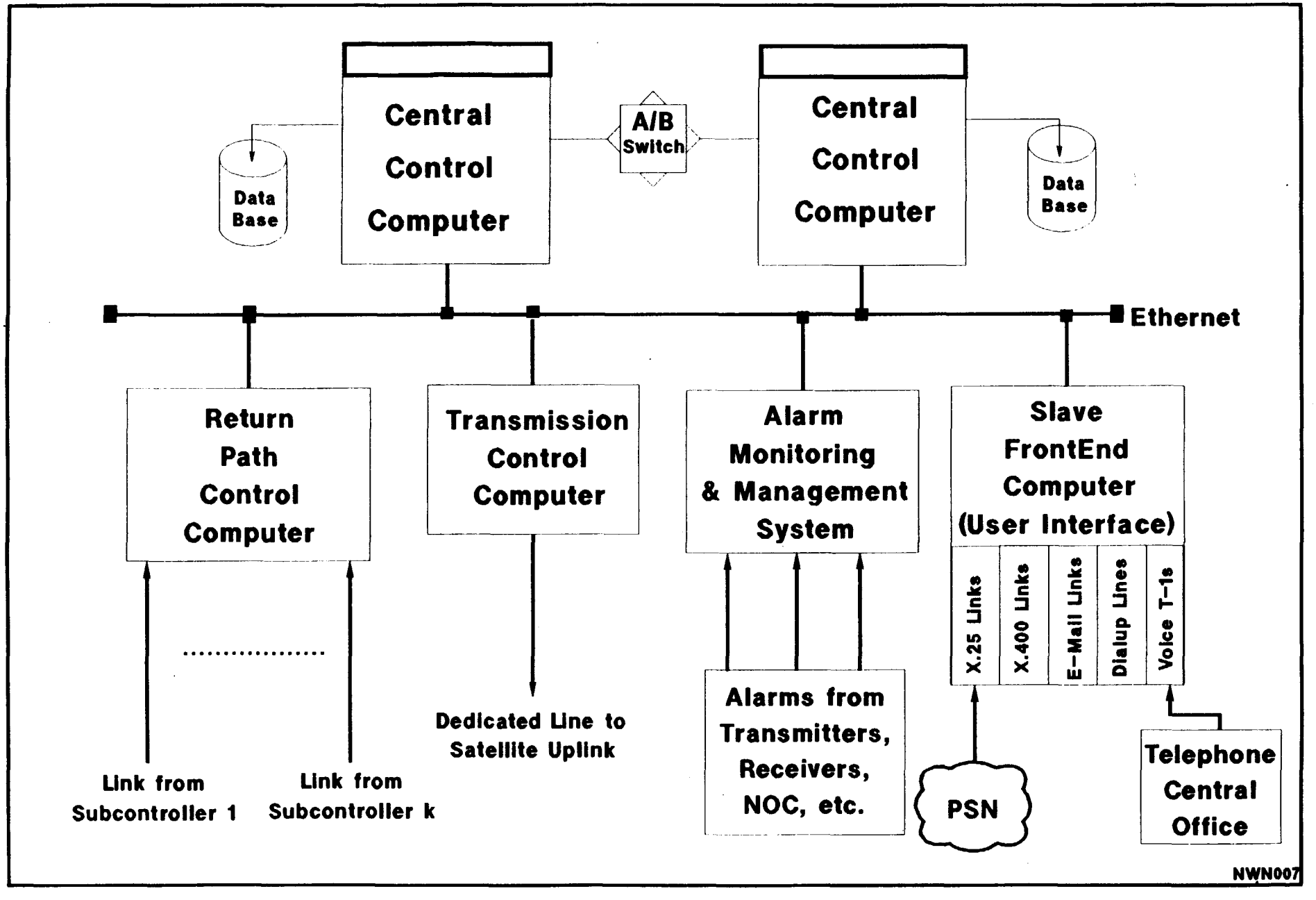

- Voice response systems for subscriber interactions with the system using DTMF telephones.
- Communication servers to control modem pools for PCs and laptops
- Fax servers
- The e-mail computer system with X.400 gateway
- Computers for complimentary services like voice mail bulletin boards, etc.
- Subscribers database
  - -- Subscribers profile management and class of services
  - -- Conversions (e.g., e-mail to fax, text to data, data to text, etc.)
  - -- Data compression
  - -- Data encryption
  - -- Data batching
  - -- Data filtering based on subscriber profile
  - -- Redundancy and data integration operations

The NOC major components are:

- Master Control Computer
- Front End Computers (User Interface (UI))
- Return Path Control Computer
- Transmission Control Computer (Satellite and Data Distribution Interface)
- Telephony Interface Equipment
- Alarm Monitoring and Management Control Computer

2.1.2 Network Operation Center (NOC) Functions

Some of the functions which may be provided by the NOC are:[2]

- Administrative Functions (Network)

  - -- Registering users
  - -- Registering user groups
  - -- Receiving and storing user requirements
  - -- Bandwidth requirements
  - -- Service requirements and profiles
  - -- Billing requirements
  - -- Service order processing
  - -- Usage statistics
  - -- User group billing
  - -- Physical inventory

---

[2] Detailed discussion of the NOC's management of the NWN assets is contained in the Attachment to this Exhibit.

- -- Facility assignment
- -- Dimensioning (RPSC, link, database)
- -- External network mediation

- Administrative Functions (Subscribers)

  - -- Terminal inventory
  - -- Storing user service requirements and profiles
  - -- Terminal registration

- Maintenance Functions

  - -- Performance monitoring
  - -- Performance management
  - -- Diagnostics
  - -- Network reconfiguration
  - -- Scheduled maintenance

- Operational Functions

  - -- Bandwidth assignment among terminals
  - -- Loading user service requirements and profiles
  - -- Usage monitoring
  - -- Priority assignment
  - -- Transmission of outbound messages through satellite
  - -- Sending inbound messages to appropriate destination or network
  - -- Security management
  - -- Call priority management
  - -- Call routing
  - -- Translation
  - -- Quality of service management
  - -- Call notification
  - -- Registration procedures
  - -- External network gateway functions (protocol interworking)

2.1.3 Benefits of Central Control -- Adaptive Registration

The adaptive registration technique provides the most efficient use of the spectrum, since the identification messages from the user's device are controlled and only sent when necessary.

The NWN will utilize an innovative adaptive registration capability. Depending on the usage pattern of the customer, the NWN will employ two types of registration:

- For those customers who receive many outbound messages, the NWN will periodically broadcast a signal to all users informing the portable unit of the zone in which it is currently operating. If the portable unit recognizes a change in the zone, it will transmit a registration (REG) message (Figure 4). To use the spectrum efficiently, the NWN will use the zonal method of transmission to these customers.

- For those customers who send many messages through the network, but do not usually receive outbound messages, and for those customers who are "casual" users of the network, i.e., they do not send or receive messages frequently, the NWN will apply adaptive registration techniques. A high level view of this technique is described below.

The NWN user's messaging device contains intelligence in non-volatile writable memory that can recognize and respond to specific system (NOC) commands or messages.

The Service Management System (SMS) will update the NWN customer service usage profiles every time the customer (user) sends or receives a message. For inbound messages, when the sub-controller sends the user's message to the NOC for routing the message to the appropriate destination, the SMS will also send a message to the SCP for updating the customer's inbound usage profile. Some of the information which may be recorded as part of this activity includes time of day, day of the week, customer's location, and the number of inbound messages sent by the customer for that day and week or month.

For outbound messages when the Service Node (SN) has received the message for the NWN customer, the SN will inform SMS and the SMS will also send a message for updating the customer's outbound usage profile. Some of the information that may be updated as part of this activity includes time of day, day of the week, customer's location, and the number of outbound messages received and number of outbound messages received for the customer for that day, week or month.

The SMS will look periodically[3] at the user's traffic pattern, and the user's usage statistics to determine the appropriate category for the user. For example, if the user has not received any outbound messages for an extended period, the SMS may consider this customer a "casual user" and, therefore, it is not necessary for the user's messaging device to send an acknowledgment to the system ID signal. For these cases, the SMS will send a system signal to the user's device to disable identification notification (see Figure 5). The customer's messaging device will then reset the identification notification flag and, therefore, will not respond to the system identification signal (conserving spectrum and portable battery life).

---

[3] The period is to be determined by specific event counts.

Mtel

Figure 4: Automatic Registration for Frequent User

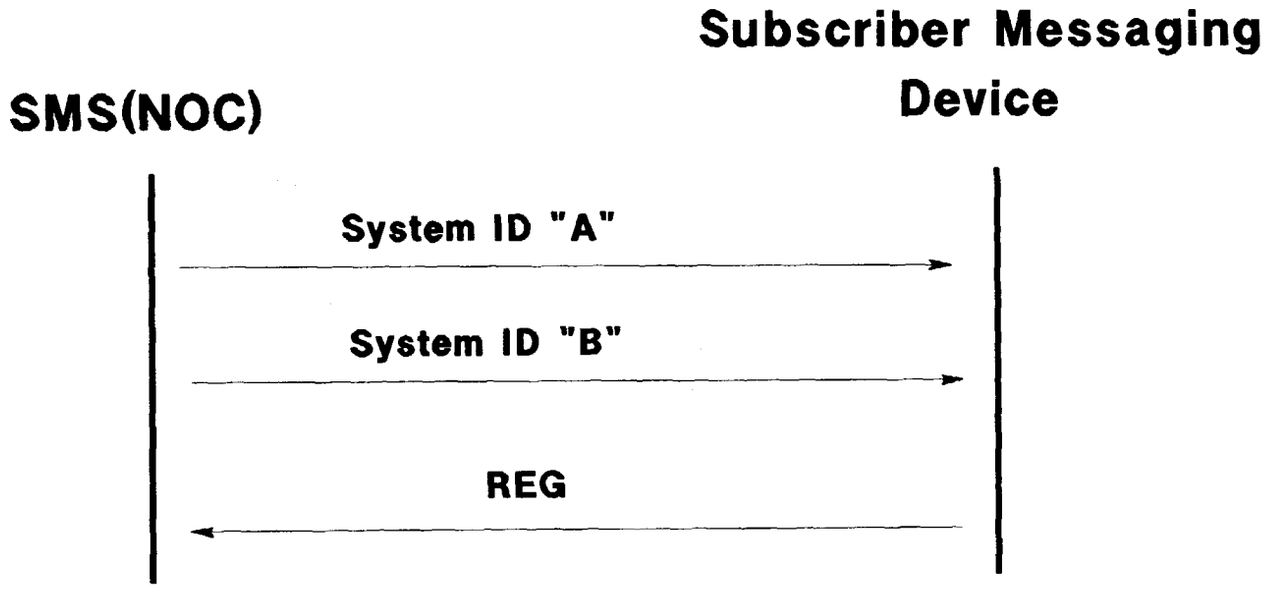

NWN015

Mtel

Figure 5: Request for Disabling Identification for Casual User

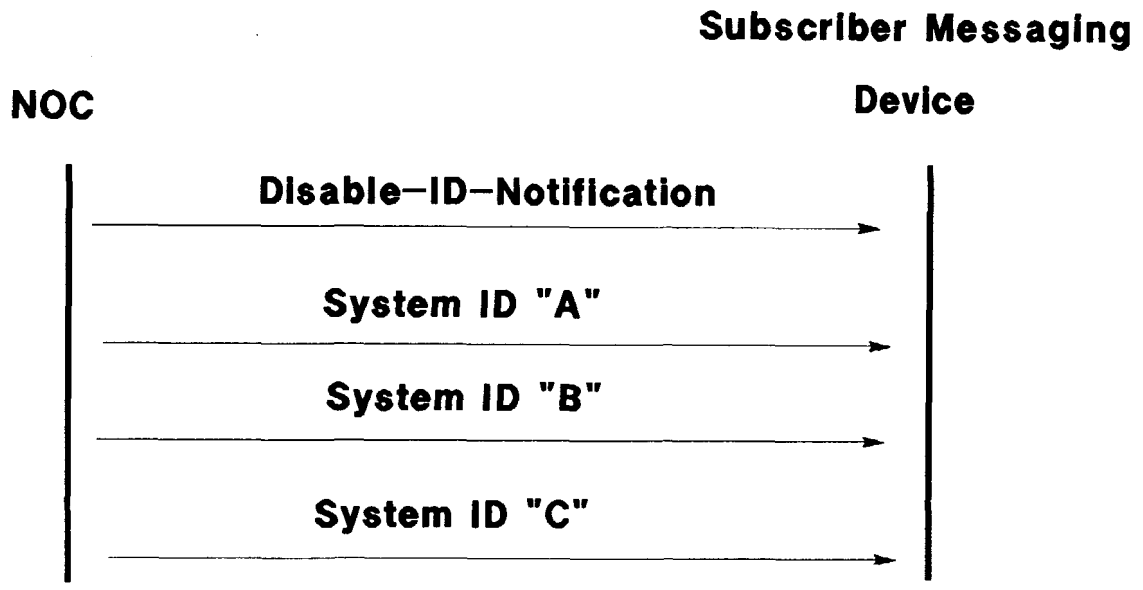

NWN016

The SMS will use the "broadcasting method" (i.e., all zone "probe")[4] for the customer's outbound messages.

The SMS will continue to keep track of the customer's usage profile, and if the outbound usage pattern for the customer changes to frequent usage, the SMS through the SN will send a signal to the customer's device with a request to enable the notification flag (Figure 6). The normal registration procedures will then apply to the customer. This technique is called Adaptive Registration since the registration technique will change according to the customer's usage profile.

Usually, for modern messaging systems to keep track of the customer, the messaging network periodically broadcasts a signal to all its users asking them to identify themselves. Upon reception of this message, the user's device will send an acknowledgment to the system. The system may then use this signal for keeping track of the customer's location. The disadvantage for this method of tracking is that the users who use the network infrequently must also respond to the identification signal even though the system may not send any messages to them for quite a while. Therefore, the spectrum is used inefficiently. As demonstrated in this section, the adaptive registration technique provides the most efficient use of the spectrum, since the identification messages from the user's device are controlled and only sent when necessary.

The following scenarios are illustrated in Figure 7:

Scenario A - Portable Registered with the NOC as Zone X.

1. All messages and data are transmitted to the portable unit by the NOC via direct satellite to zone X transmitters and sent over the terrestrial simulcast system in zone X.

2. Registration notification is transmitted by the user's portable unit to the nearest receiver(s) and then to sub-controller for batching and transport to the NOC.

If after the preset number of tries the system is unable to get verification from the portable unit, it will send a nationwide request for registration (a "probe") to locate the user. The portable unit, after receiving this request, will register through the nearest receiver with the return path sub-controller. (See next section for details.)

[4] "Probe" is a short message that is transmitted to the portable unit requesting it to register its location for actual message delivery.

Mtel Figure 6: Request for Enabling Identification notification

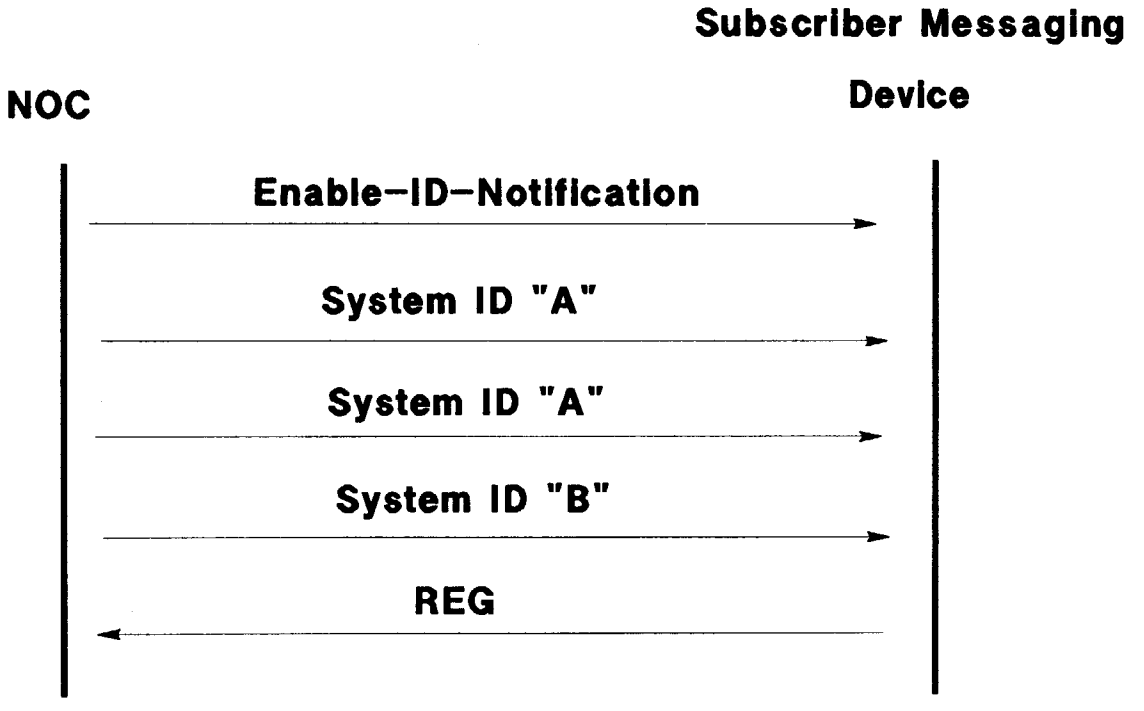

NWN017

Figure 7: NWN Regional Systems and Registration Schemes

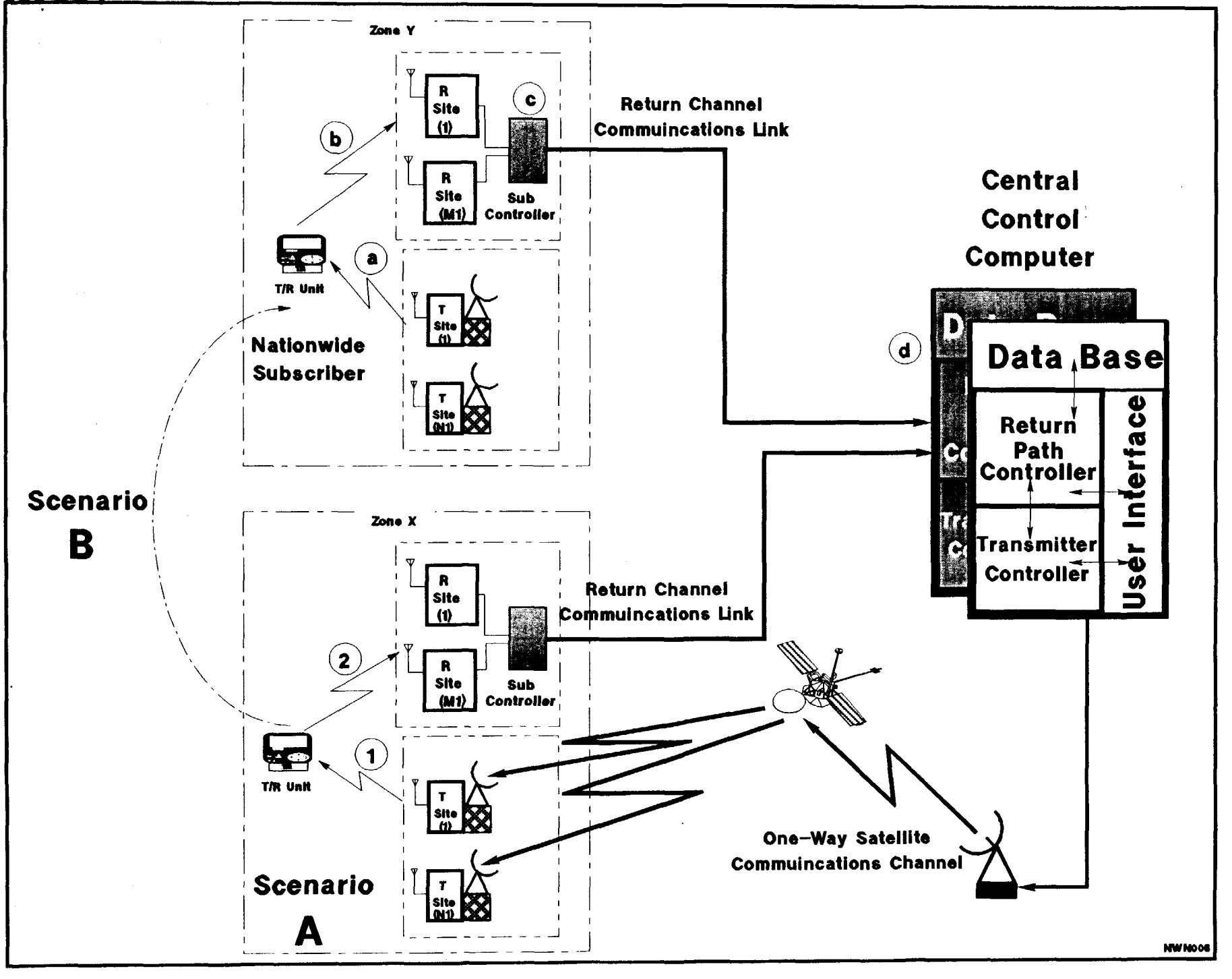

In case of undeliverable messages or data,[5] the NOC will keep the data for a predetermined amount of time for on-line retrieval by the user or for delivery via an alternate mode (e.g. land-line, fax, e-mail). While undelivered messages are in the database at the NOC, if new messages for the same user arrive, the NOC will try again to deliver the new message as well as the old undelivered data to the subscribers.

The NOC's intelligent queuing and global knowledge of the entire system make it possible to poll the portable units during idle times for registration based on undelivered message logs and total system conditions in the zone.

Scenario B - User Travels From Zone X to Zone Y.

a. Upon arrival in zone Y, the user's portable unit will recognize the new zone ID by listening to ID transmission of the terrestrial simulcast system, since the new ID is different from the last ID recognized by the portable unit in zone X.

b. The portable unit will transmit a registration.

c. The zone Y return path sub-controller will take the registration and combine it with it all other data and send it to the NOC.

d. The NOC will verify the portable unit's authorization and check the subscriber's database for types of services available to this subscriber at zone Y.

After validation, the NOC will update the database and all messages and stored messages for this subscriber will be transmitted to zone Y. The entire process will be completely transparent to the subscriber.

2.1.4 Benefits of Central Control -- Dynamic Zone Allocation

A critical advantage of centralizing the control functions is that many sophisticated approaches can be developed to maximize the overall NWN system capacity. The NOC can use its global knowledge of the zones and portable terminal locations within the zones to maximize the frequency reuse possibilities. One such strategy is illustrated by the geometry in Figure 8, where Mtel proposes a scheme for more efficient utilization of spectrum to

---

[5] A message is only "undeliverable" after a number of unsuccessful "probes."