Figure 4

# *Data Packet Format & Summary*

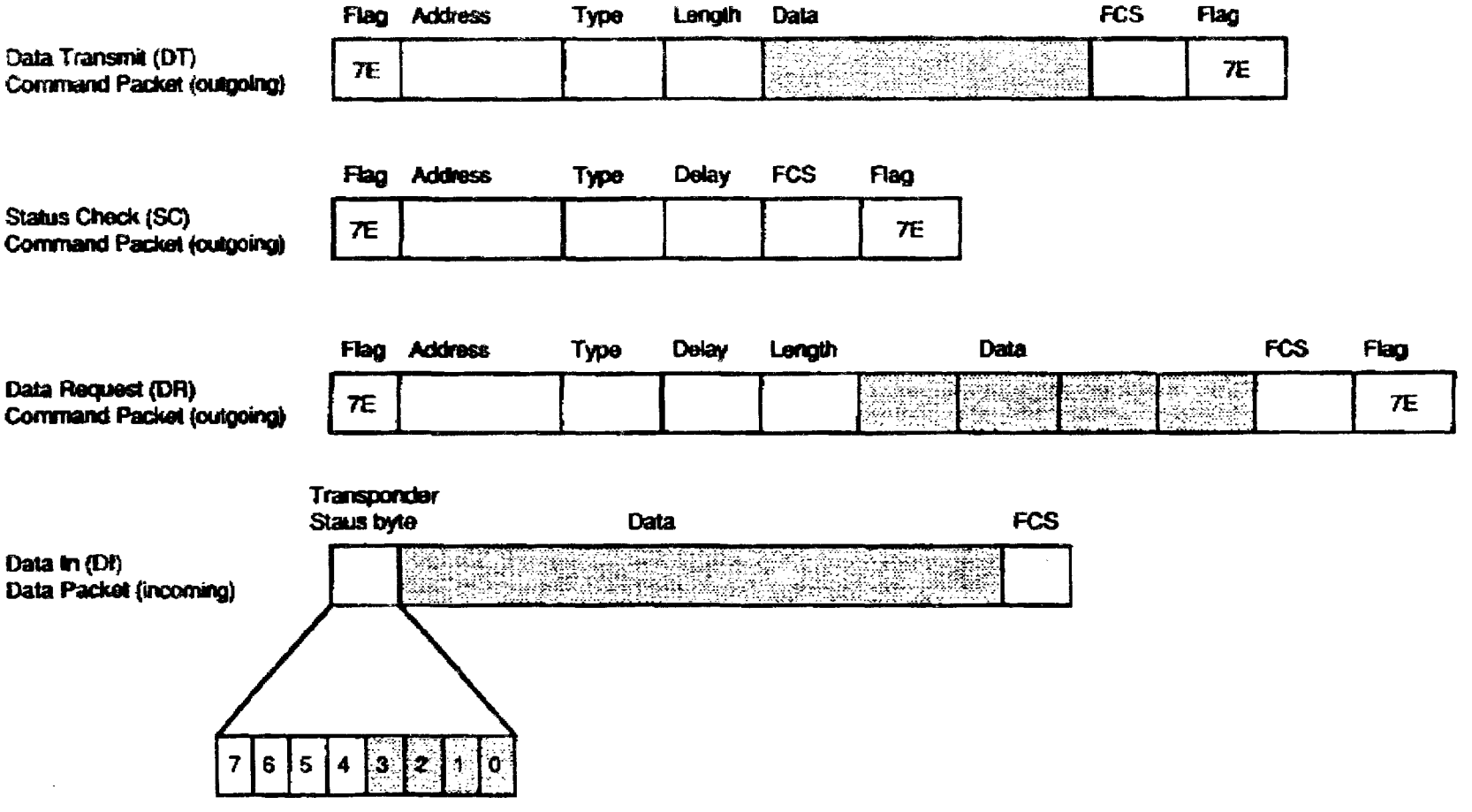

Figure 5

# *One-bit Status Check*

II. Inbound Data Stream (Remote to Base)

(I.1) Status Send (SS)

A single bit is transmitted for 0.4 msec after a delay set by the status check command and the remote unit Index number. The bit time in this case is shroter than normal bit time to allow for 0.1 msec silence between transmissions from two remote units.

The zero-one pattern for single bit

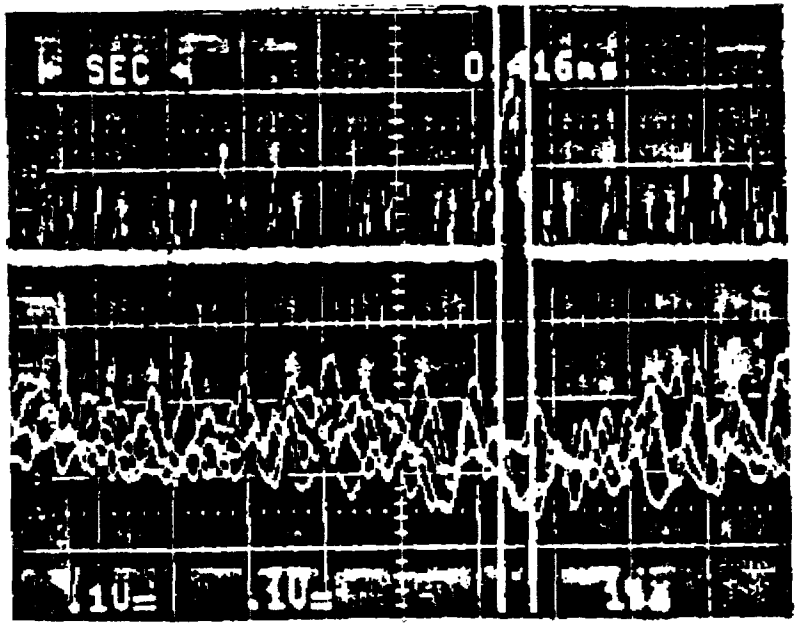

Figure 6

*Radio Data Link "Handshake"*

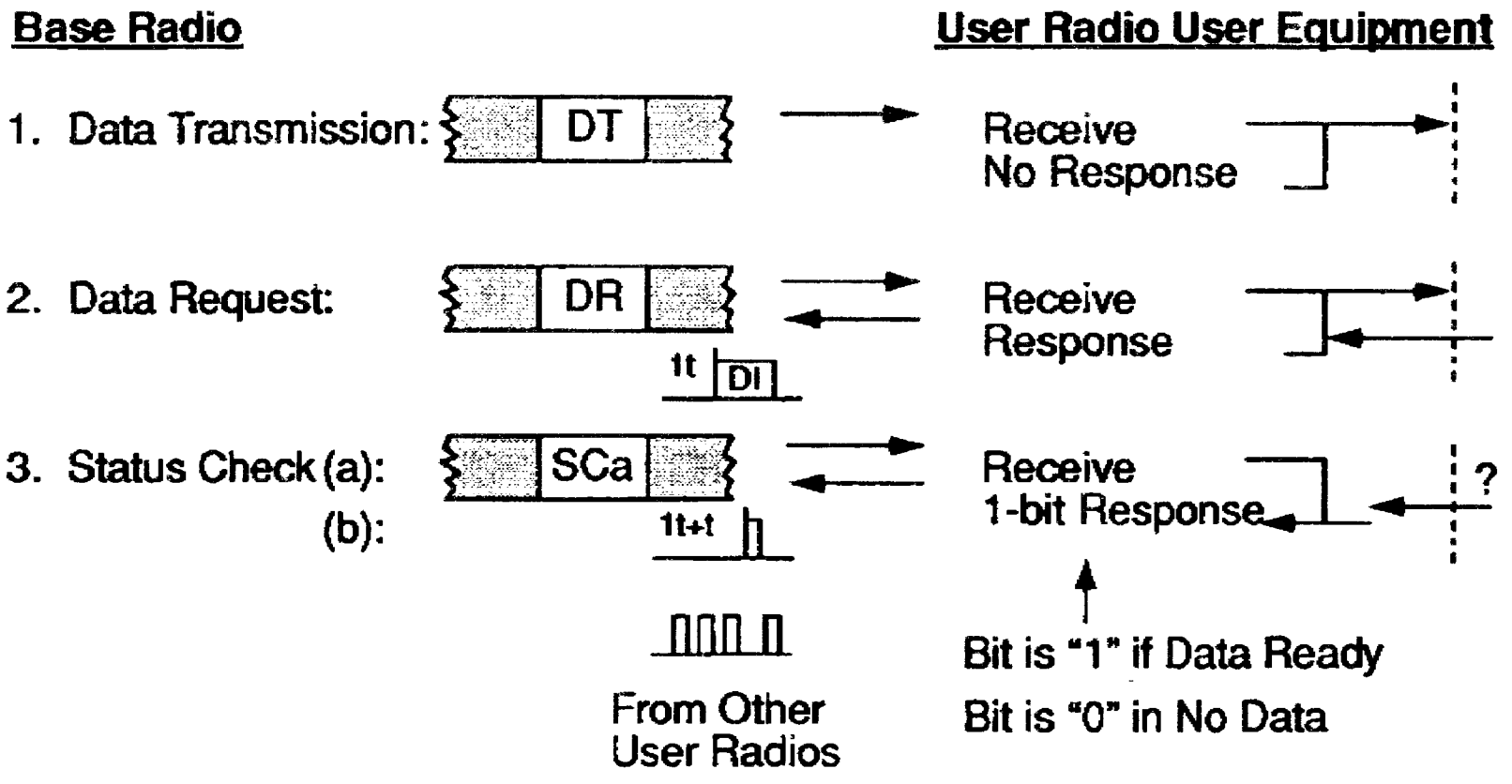

Figure 7

## *Base Station Advantages*

- Very Low Component Costs
- Off-the-Shelf Components for Major Subsystems
- Small Size Radio Cabinet; Easy Installation near Antenna
- Connect to Base Controller by Simple Wiring (300 ft max)
- Controller is Standard P.C.
- Reliability Through Distributed Processing
- Interconnected by Packet Network for Flexibility
- Simplicity Allows Rapid Deployment
- Isolated Cell Can Cover Remote Community

Figure 8

## *Base Station Features*

- Functions
  - Transmission-Reception From Mobile User Radios
  - Log On and Off of Mobiles
  - Polling for Incoming Data
  - Error Check and Re-try
  - Status Monitoring and "Tuning" of Mobiles
  - Billing-Maintenance Recording/Reporting
  - Formatting & Transmissions to "Land Side" User Net
- Components
  - Outdoor Radio Unit in Environmental Cabinet
  - Omni or Sector Antenna & Connecting Cable
  - Twisted-pair "Telephone Cable" to Indoor Unit
  - Base Controller IBM Compatible P.C. Board
  - P.C. and Modem to Network
- Expendability
  - Up to Three Radio Channels/Base Cabinet
  - Up to Three Base Controller Cards/P.C.

Figure 9

# Base Station Cabinet Equipment

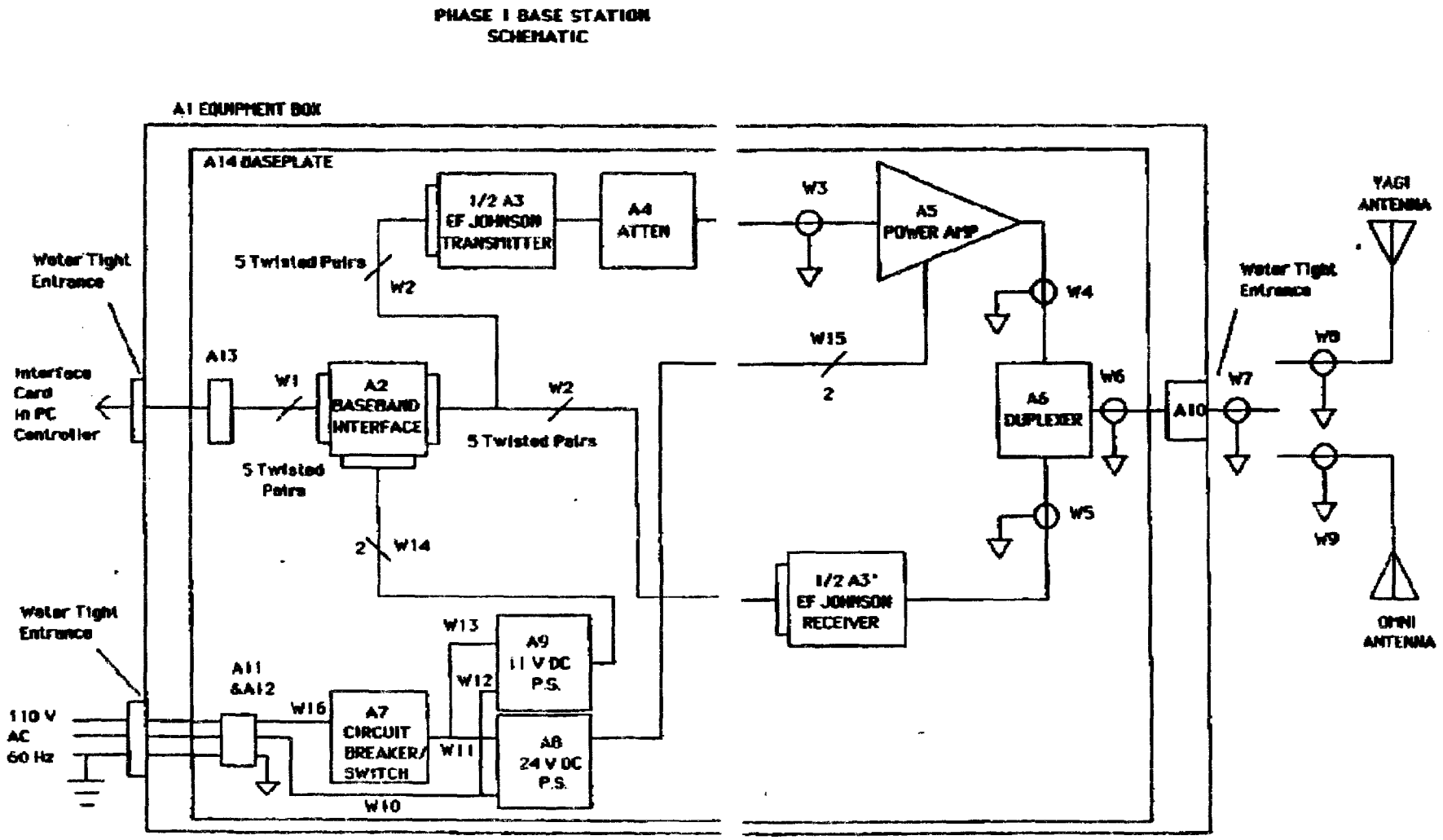

Figure 10

*Base Station Outdoor Container*

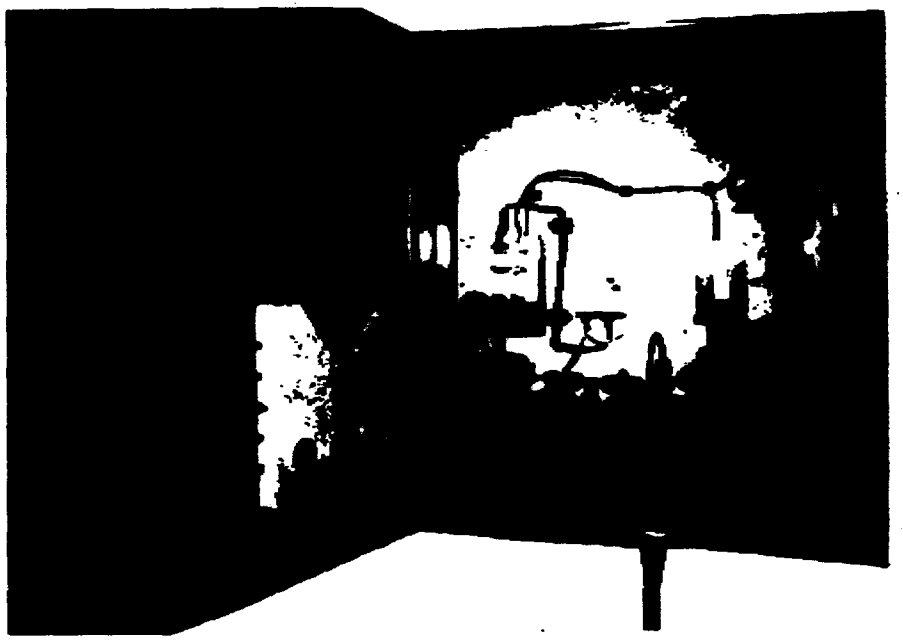

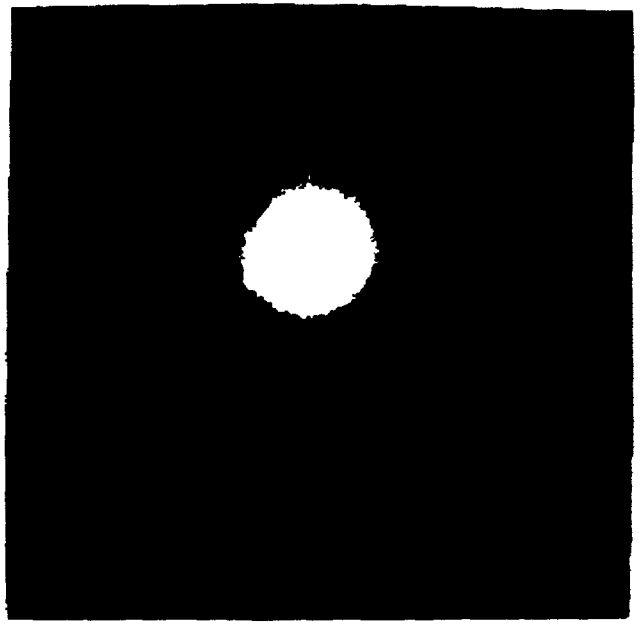

Figure 11

## *Base Station Transmitter Specifications*

| | |
|---|---|
| Modulation Format: | Coherent FSK (shaped) |
| Data Rate: | 2400 b/sec |
| Frequency Stability: | ±800 Hz (Oven Reference) Computer Monitor and Control |
| Spurious: | -55 dBc |
| # Channels | Single Channel (Crystal Set) |
| Transmit Power: | 5 Watts to 20 Watts |
| Power Consumption: | 200 Watts AC |

## *Base Station Receiver Specifications*

| | |
|---|---|
| Rejection of Out of Band Signals: | 50-55 dB @ 6 KHz |
| IF Frequency: | 1st IF 21.4 MHz, 2nd IF 455 KHz |
| IF Bandwidth: | 2nd IF BW: 3 KHz (including Baseband ) |
| Frequency Tuning Range | ± 6 KHz (Crystal) Computer Controlled |
| Sensitivity: | -123 dBm @ $10^{-2}$ BER |
| Dynamic Range: (Front End) | 100 dB |

Figure 12

## *Base Station Controller Board (PC Standard Plug In)*

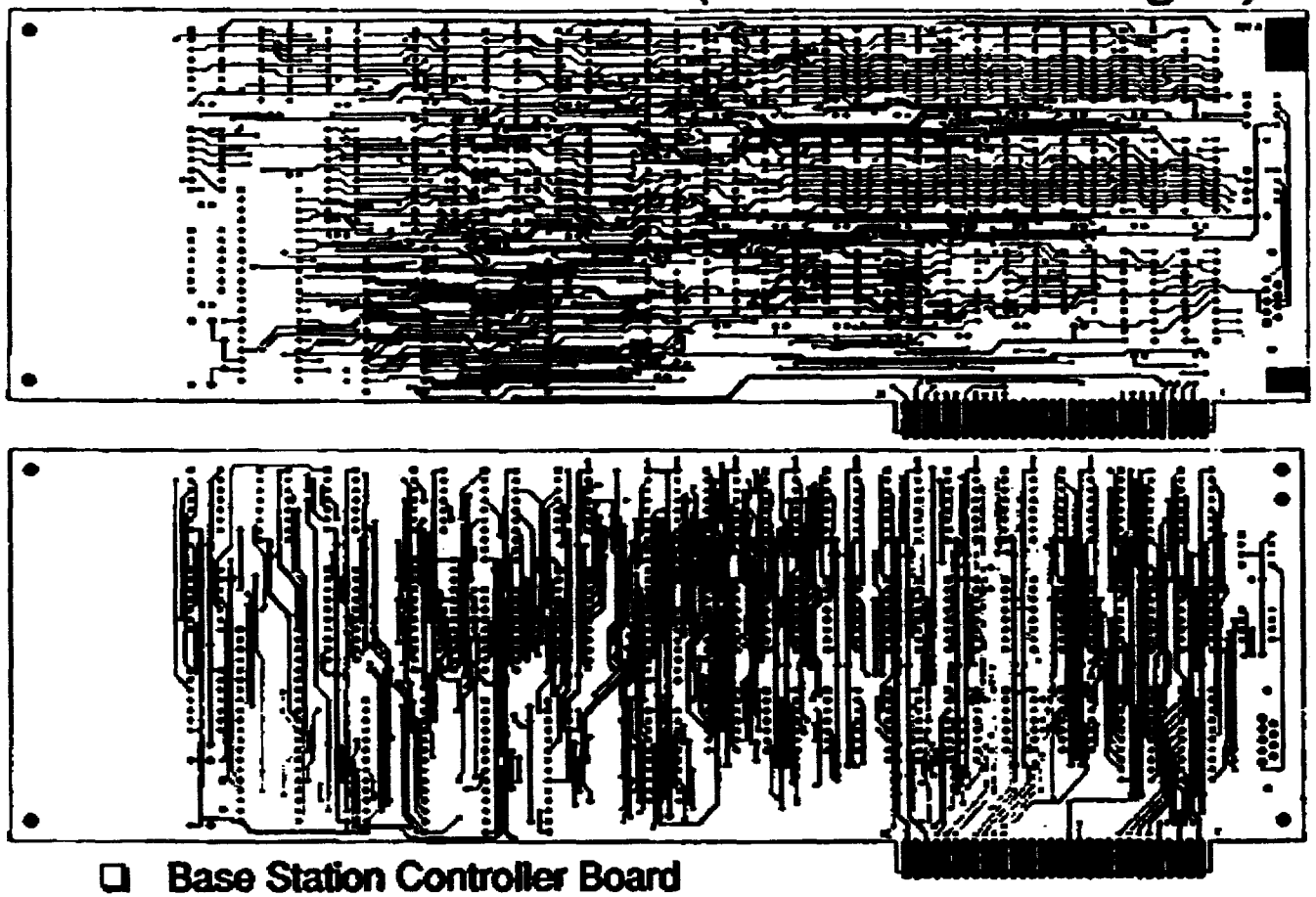

- Base Station Controller Board
  - Mounted in Standard IBM P.C.
  - Twisted Pair Cable to Radio Cabinet
  - Several can be Mounted for Multiple Channels
  - Performs All Processor-Intensive Functions

Figure 13

## User Radio

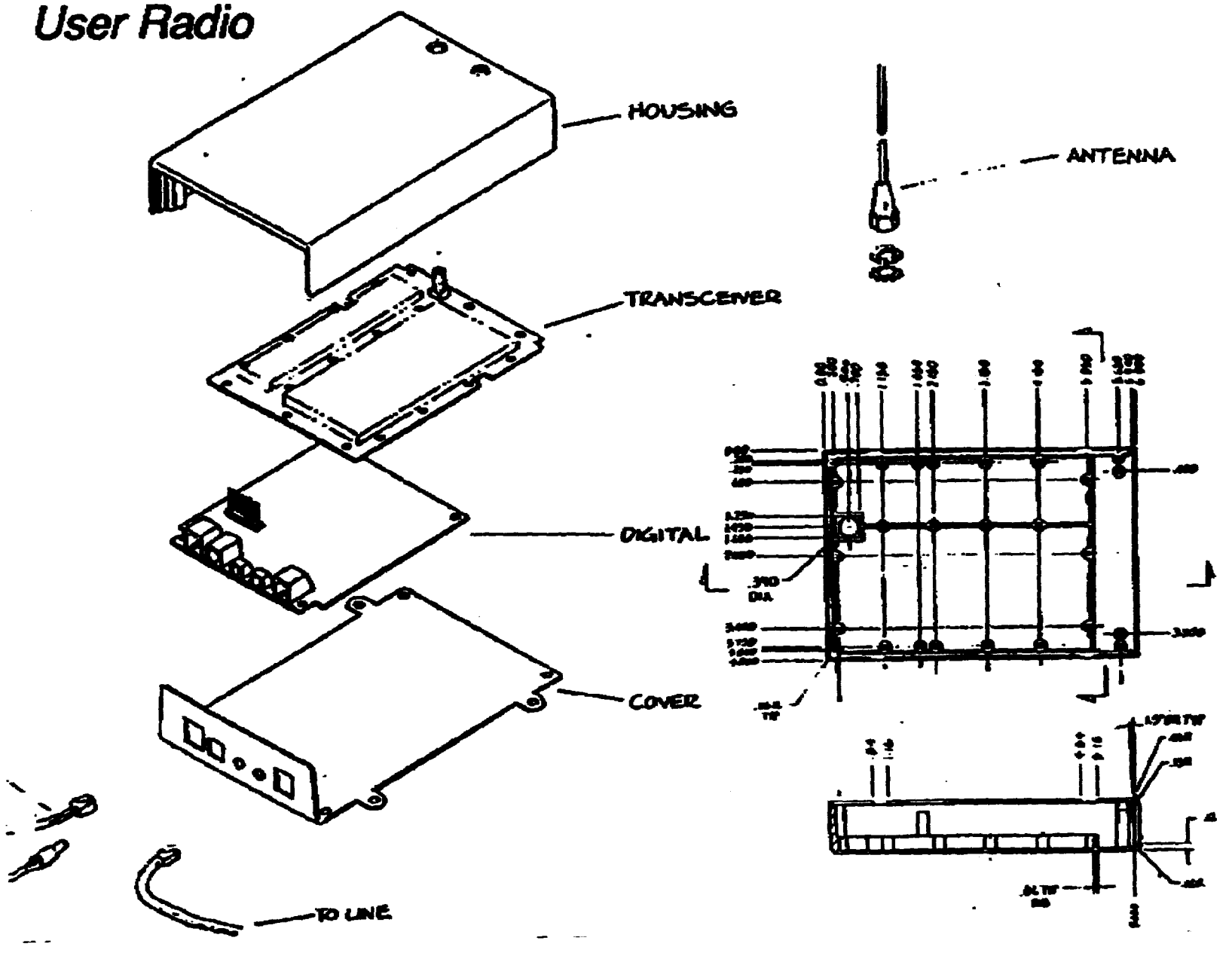

Figure 14

## *Digital Control Board of User Radio*

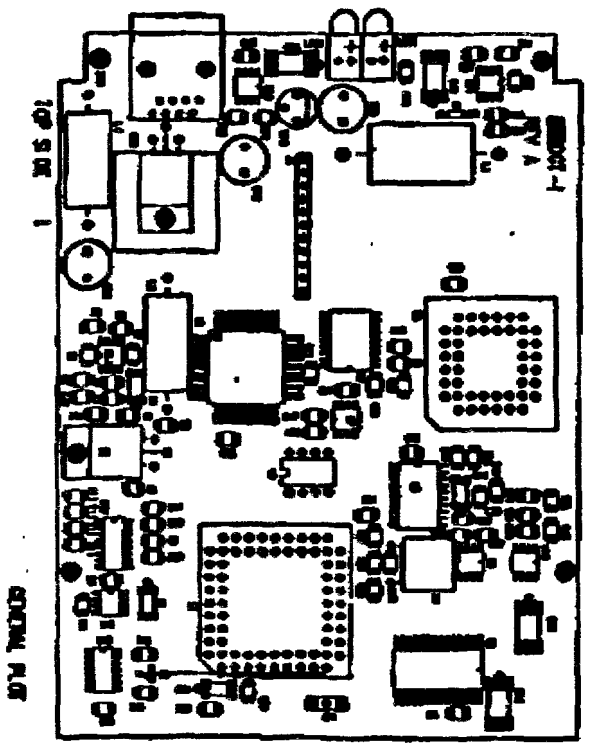

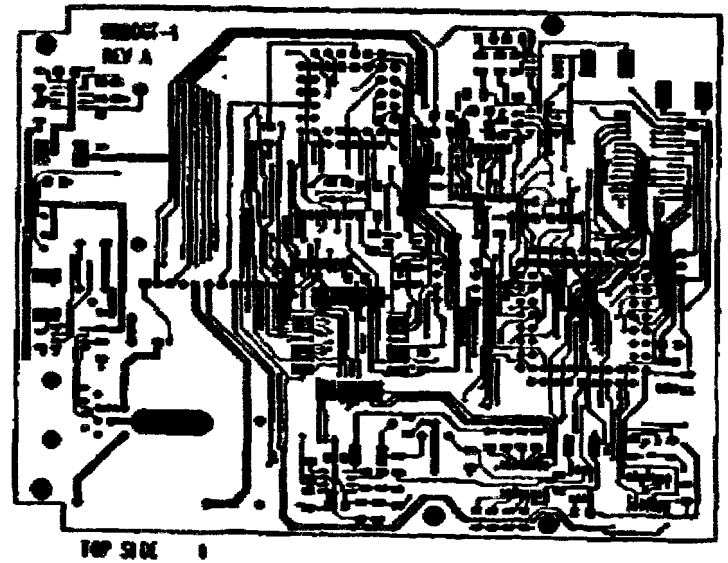

TOP SIDE 1

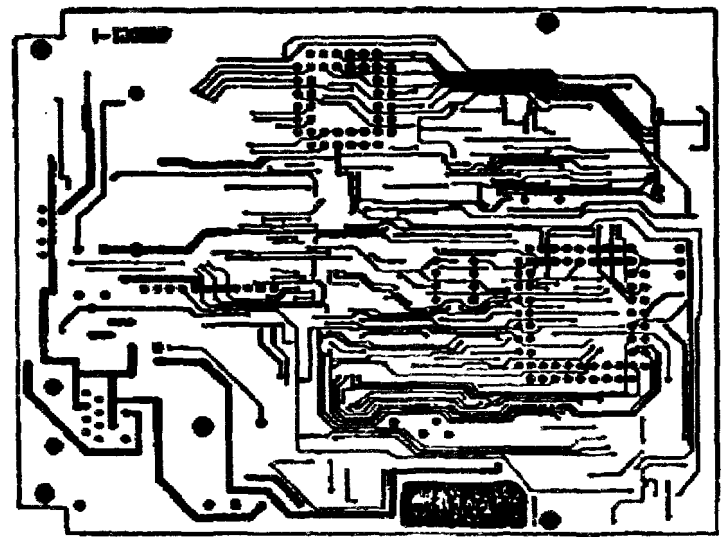

BOTTOM SIDE 2

TRANSTECH INTERNATIONAL
DIGITAL BOARD 5-23-00
DCT-4.JOB REV A

Figure 15
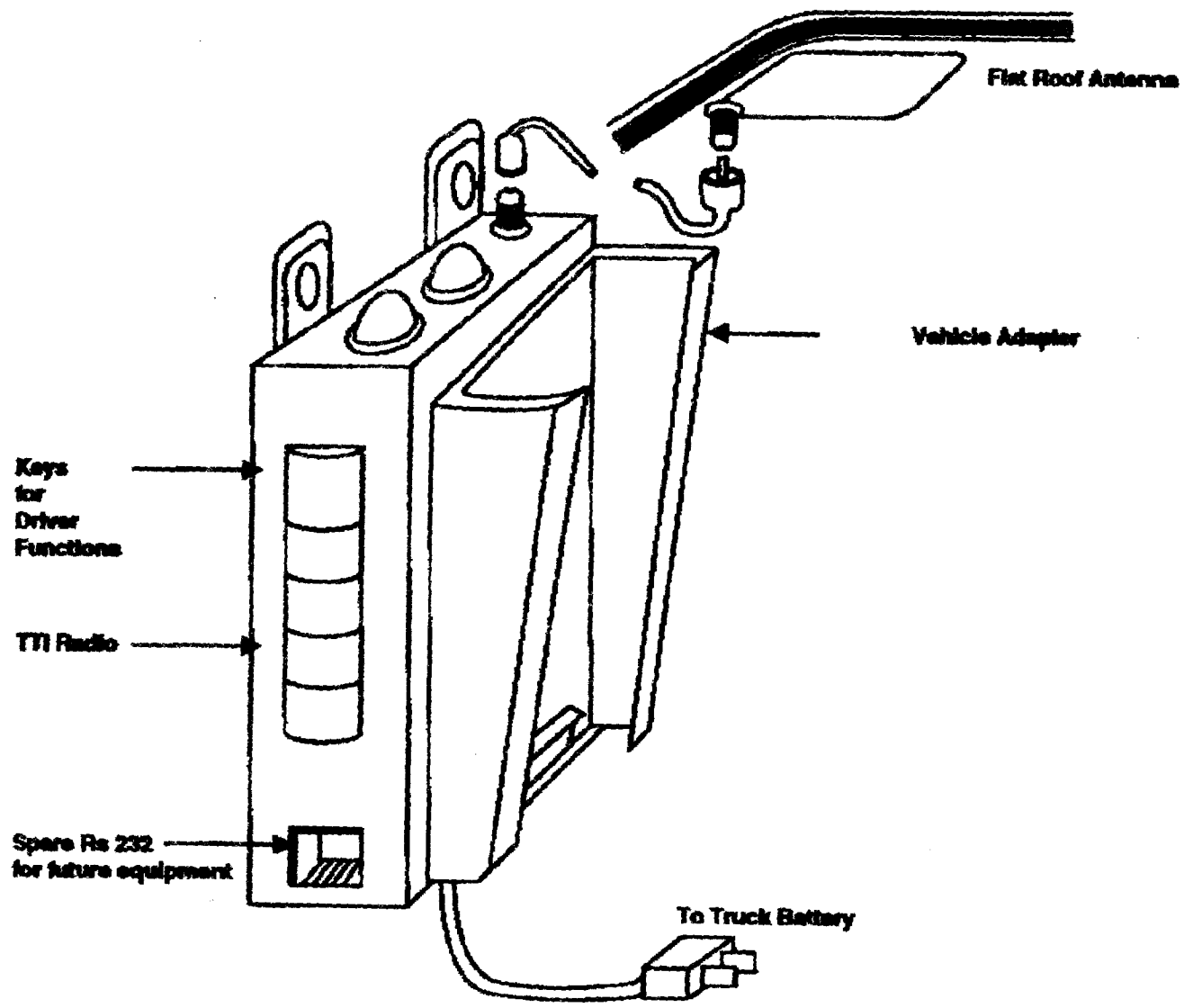
*Integration with In-Vehicle Adapter*