ORIGINAL

RECEIVED

JUN 16 1992

Federal Communications Commission
Office of the Secretary

BEFORE THE

# Federal Communications Commission

WASHINGTON, D. C. 20554

| | |
|---|---|
| In re Request of<br><br>**PacTel Paging**<br><br>For a Pioneer's Preference Respecting Advanced Architecture Paging Services | ET Docket No. 92-100<br>Preference No. PP-38 |

ORIGINAL FILE

To: The Chief Engineer, Office of Engineering and Technology

## REPLY COMMENTS OF PACTEL PAGING

PacTel Paging ("PacTel"), by its attorneys, hereby submits Reply Comments with respect to its above-referenced request for a Pioneer's Preference ("Request")[1] in the licensing of Advanced Architecture Paging Services ("AAP"). The following is respectfully shown:

## I. INTRODUCTION

1. A wealth of comments have been filed in this proceeding by a broad cross-section of commenters.[2] Each considered this proceeding, into which the various petitions for rulemaking and requests for pioneer's preferences for Advanced

---

[1] On June 1, 1992, Pactel filed a Supplement to its original Request adding information regarding additional testing being performed by PacTel. PacTel's supplemental pleading has been placed on Public Notice, DA 92-712 (Issued June 4, 1992).

[2] The commenting parties include major equipment manufacturers, engineering firms, local, regional and national paging companies, private carriers and radio common carriers.

No. of Copies rec'd 0+4
List A B C D E

Messaging Service ("AMS") have been consolidated, to be sufficiently important to merit their active participation. Of these, only two chose to oppose the request of PacTel for a pioneer's preference with respect to the AAP service.[3]

2. In separate sections below, PacTel sets forth the basis of its disagreement with the principal arguments that have been made by the AAP Commenters.

## II. AAP IS A UNIQUE SERVICE NOT OFFERED ON EXISTING ONE-WAY MESSAGING SYSTEMS

3. The AAP Commenters argue that AAP is not a distinct service and can be offered by them on their existing one-way messaging systems. PacTel disagrees. AAP is a distinct new service which offers subscribers the ability to receive high-speed, unformatted bitstreams of information without any limitations or constraints imposed by the messaging format.[4] Today, there is no efficient mechanism to send varying bitstreams of information through a one-way messaging system because the paging protocols and message entry format do not support variable

---

[3] The parties commenting against PacTel are Paging Network, Inc. and PageMart, Inc. Collectively, they are referred to herein as the "AAP Commenters".

[4] For example, different computers use entirely different word sizes for addressing and storing data -- i.e., 8-bit, 16-bit, 32-bit, and 64-bit. AAP will not require the subscriber to shoehorn the data into a carrier-defined structure that creates inefficiencies, such as requiring 64-bit data to go in 4-bit chunks.

unformatted transmissions.[5] To advance the state of the art, PacTel is working with industry standard committees to produce a layered protocol which will support AAP's bitstream applications.[6]

4. AAP is a unique service just like the T-1 service provided by wireline telephone companies is a unique service which is different from dial-up telephone service.[7] Both T-1 service and AAP service are bitstream conduits through which a subscriber can send information of its choosing of whatever length and in whatever format the subscriber needs. For example, in AAP, a subscriber could send a 10,000 bit message which has

---

[5] The protocols only support numeric and alphanumeric characters. PacTel agrees that with revisions to the current system architecture a quasi-bitstream service could be offered. However, because of the limited speed and available capacity of today's one-way messaging systems, such quasi-bitstream service would not be successful.

[6] At present, these industry committees are working under the aegis of Telocator, the personal communications association. PacTel is a member of the high speed committee which is working on advanced one-way messaging formats and protocols to support Advanced Messaging Services, and more importantly AAP. PacTel is also a member of the Telocator Data Protocol committee which is working on the formats and protocols which permit entry of Advanced Messaging Services into the one-way messaging network. These committees have adopted a requirements document, drafted by PacTel, which establishes the requirements for the next high speed one-way messaging format. One of those requirements is that the format support bitstream services, such as AAP. The layered protocols being worked on with Telocator would support specific subscriber applications, as well as off the shelf applications such as spreadsheets and E-mail programs.

[7] There is clearly a distinct market for T-1 services differentiable from ordinary dial up service. PacTel posits that the same market differentiation will occur with respect to AAP services and the current one-way messaging services.

several components, a 40 bit numeric message (i.e., 10 digits times 4 bits per digit), plus a 700 bit alphanumeric message (i.e., 100 characters times 7 bits per character), and a 9,260 bit executable PC program.[8] Or, to offer another example, a subscriber could send a 50,000 bit message which would include a digitized voice component as well as some graphics characters. This is comparable to a T-1 service where the subscriber can use the same wireline conduit alternately to send four video signals or 16 voice grade signals.[9]

## III. AAP WILL PROVIDE SUBSTANTIAL IMPROVEMENTS IN THROUGHPUT

5. The AAP Commenters argue that AAP does not offer any improvements in speed or capacity over existing paging systems. PacTel strongly disagrees.

6. At the outset, PacTel must note that it has a substantial basis in experience and experimentation to address this throughput issue. PacTel has been a leader in testing and implementing state of the art one-way messaging systems throughout the United States. PacTel was the first operator to test 2400 baud simulcast systems and PacTel was instrumental in introducing 2400 baud systems to the market. In addition, PacTel

---

[8] Another application of bitstreams is alternate character sets -- such as those used to display Cyrillic, Arabic, Hebrew character sets, and Ideograms.

[9] As the one-way messaging services market develops, PacTel foresees that it will become a specific requirement of many computer programs that send and receive information that the one-way messaging service support bitstream messages without alteration all the way through the system.

was the first operator to test advanced simulcast control systems which will support speeds in excess of 1200 baud.

7. PacTel continues to operate at the forefront of the messaging business and, as a result, has an ongoing program to review current technology and work in process. PacTel, through its affiliate, Telesis Technologies Laboratory, Inc. ("TTL"), has been testing, pursuant to authority granted by the Commission in File Nos. 1658 through 1662-EX-PL-90,[10] the simulcast environment to determine the practical baud limit of a simulcast system using frequency shift keying (FSK). The leading proposals for future one-way simulcast messaging systems center around 3125 baud.[11] Yet, PacTel has determined that the limit for FSK simulcast systems lies between 3200 and 6400 baud and PacTel is conducting further experimentation to refine that limit.[12] PacTel now has reason to believe that the simulcast limit may be increased to around 4800 baud in the near term. With four level FSK, such a system would have an effective

---

[10] The experimental authorization was granted originally to PacTel's ultimate parent, the Pacific Telesis Group, and then transferred to the company's research and development subsidiary, TTL. See FCC File No. 1934-EX-TC-91.

[11] This is the baud rate of the ERMES standard proposed for one-way messaging in Europe. Through the use of 4 level frequency shift keying ERMES has an effective throughput rate of 6250 bits per second. ERMES has taken the approach of a simulcast system as the next generation one-way messaging system.

[12] These results were set forth in PacTel's April 1992 Progress Report filed with the Commission. Attachment 1 hereto is a copy of the work plan for May through July. PacTel will file its findings with the Commission with its next Progress Report.

throughput rate of 9600 bits per second -- some 30% greater than the 3125 baud rate.[13] PacTel also has concluded that this improvement can be achieved while maintaining a 25 kHz channel width.[14]

8. PacTel is also trying for greater speeds and has tested 19.2 Kilobits/second in a 30 Khz channel in the lab. PacTel is also evaluating advanced modulation schema, such as QAM, orthogonal frequency division mutiplexing, and Code Division Multiple Access (CDMA), to determine if any of these modulation schema will permit even greater throughput rates in a simulcast system.[15]

9. Significantly increased throughput is required to support AAP services because the diverse menu of available services calls for increased bits to be sent by the subscriber. For example, a 5 second digitized voice message with an 8 bit

---

[13] If ordinary 10 digit numeric paging messages were sent over that improved system, such a system could support approximately 1.2 million subscribers per 25 kHz of spectrum.

[14] This conclusion eliminates the concerns expressed by the AAP Commenters that a 50 kHz channelization plan would be incompatible with the 929-930 MHz and 931-932 MHz channel spacing and utilize too much spectrum.

[15] PacTel believes that these future modulation schema, unlike future paging protocols, may not be completely compatible with existing modulation schema and thus might not be offered on the same channel as an additional service. Rather, these new modulation schemes will need to be located on dedicated spectrum. The future paging protocols could probably be placed on channels along with other paging protocols. However, if the speed of the underlying channel is insufficient, the operator would not be able to economically provide the new service.

vocoder rate creates a 40,000 bit message. A facsimile message could run into the hundreds of thousands of bits. In addition, the market is demanding all systems provide service over large areas -- sometimes as large as several states. In order to economically provide these services over the large area demanded by the market, the messaging system must have capacity in the neighborhood of 100,000 or more subscribers.[16] Low speed systems, such as those deployed today, would have too few subscribers to allow economical provision of service.[17]

10. PacTel's vision is that the 930-931 MHz band should be used to support the technology which can be developed, deployed and largely utilized in the service of increased demand in the near term -- 3 years. It is imperative that the Commission allocate 930-931 MHz to support these near term technologies because they will provide a springboard for the even more advanced services with more complex modulation and coding schema.

11. Ultimately, the Commission must plan for another band of 3-7 MHz for the technology which will require longer to develop. PacTel has and will continue to explore and develop

---

[16] Today's one-way messaging systems at 1200 baud have that capability today. It is clear that services, such as tone and voice paging, which have 2,000 subscribes cannot economically support the wide-area systems the market demands.

[17] It is axiomatic that for digitized voice, for example, that the throughput rate must allow the system to send the digitized voice message in a time equal to the message length. A service would not be economical if it takes 10 seconds to send a 5 second message.

both the near term technology -- 9600 bits per second 4 level FSK simulcast -- and the more complex technologies -- QAM, CDMA, orthogonal frequency division multiplexing.

## IV. CONCLUSION

12. PacTel respectfully requests that the Commission move forward with the introduction of a Notice of Proposed Rulemaking on AAP and tentatively award PacTel a preference in the licensing of AAP for its work on AAP.

Respectfully submitted,

PACTEL PAGING

By: _____
Mark W. Stachiw
Carl W. Northrop
Its Attorneys

Mark A. Stachiw
PacTel Paging
12221 Merit Drive
Suite 800
Dallas, Texas 75251
(214) 458-5200

Carl W. Northrop
Bryan Cave
700 Thirteenth Street, N.W.
Suite 700
Washington, D.C. 20005
(202) 508-6000

Dated: June 16, 1992

**ATTACHMENT 1**

# ADVANCE PAGING MODULATION TEST PLAN

for improving Data rates of paging
systems in a simulcast environment

## EXECUTIVE SUMMARY

The purpose of Phase 2 Tests will be to continue the efforts begun in Phase 1 by investigating advanced modulation schemes for increasing the effective data rate of paging systems in a simulcast radio environment.

The maximum baud rate achieveable when one information bit is transmitted during the time of one signalling bit is 4800 baud.

Advanced modulation schemes increase the effective data rate by transmitting more than one information bit during the time interval of one signalling bit.

Modulation schemes to be investigated are 4 Level BFSK, Multi-tone FSK, QPSK and QAM.

Since commercial radio equipment is not available for these tests our work will initially be confined to the laboratory environment.

Test equipment that is readily available for working with the more advanced digital modulation schemes will be used to simulate the simulcast paging environment.

The results of the tests will be presented in graphs that will demonstrate the ability of each modulation scheme to perform in a simulcast radio environment.

**Table of Contents**

Definition of terms.....Section 1.0..... 3

Introduction.....Section 2.0..... 4

Test Definition.....Section 3.0..... 5

Test System.....Section 4.0..... 6

General Description.....Section 4.1..... 6

Transmitter.....Section 4.1.1..... 7

Receiver.....Section 4.1.2..... 7

Test Equipment List.....Section 4.2..... 7

Test Equipment Calibration..Section 5.0..... 8

Equipment Setup.....Section 5.1..... 8

Equipment Calibration.....Section 5.2..... 8

System Calibration.....Section 5.3..... 9

Tests.....Section 6.0..... 9

Results.....Section 7.0..... 9

Presentation.....Section 7.1..... 10

Timeline.....Section 8.0..... 10

1. General terms used throughout document.

| | | |
|---|---|---|
| BER | : | Bit Error Rate |
| BFSK | : | Binary Frequency Shift Keying |
| DPSK | : | Differential Phase Shift Keying |
| FSK | : | Frequency Shift Keying |
| GPS | : | Global Positioning Satellite |
| PRBS | : | Pseudo Random Binary Sequence |
| QPSK | : | Quadrature Phase Shift Keying |
| SA | : | Spectrum Analyzer |
| UTC | : | Universal Time Coordinate. |
| VSG | : | Vector Signal Generator |
| VMA | : | Vector Modulation Analyzer |
| 8PSK | : | 8 Phase Shift Keying |
| 16QAM | : | 16 Quadrature Amplitude Modulation |
| 64QAM | : | 64 Quadrature Amplitude Modulation |

Advanced Modulation Paging Simulcast Test Plan

## 2. Introduction

Results of Phase 1 tests indicate that in a simulcast radio environment increases in data speed must be accomplished by some means other than simply using a higher transmit data rate.

In a simulcast radio environment intersymbol distortion becomes the determining factor as to the rate data can be sent over a radio link. Propagation delays between the transmit carriers must be kept to within approximately 1/4 the length (time) of a signaling bit period in order to successfully decode a binary bit stream at the receiver.

In a pure binary shift keying scheme as the data rate increases the bit period duration becomes less. At 1200 baud the bit period is 833 us. At 12.4 Kbaud the bit period is 83.3 us.

As can be seen, the higher the data rate the more critical phase delays become. In a simulcast radio environment the upper theoretical limit of the signaling rate is 4800 baud.

In order to achieve the data rates needed to support advanced paging networks capable of delivering large quantities of data to its customers, an investigation of advanced modulation schemes suchas 4 Level BFSK, Multi-tone on-off keying (MOOK) and digtal modulation schemes suchas QAM and QPSK needs to be conducted.

In discussing data transfer rates the terms baud rate and bits per second have been commonly used to mean the same thing. As long as the signaling bit period of a binary data stream corresponds to one information bit, then baud rate and bit per second rate are equal. If however, the information bit rate is changed to correspond to more than one signaling bit then baud rate and bits per second are no longer equal.

For example, if a data stream containing binary data, where the bit period equals one information bit, is 1200, then the baud rate is 1200 baud and the bit rate is 1200 bps. If however the signaling bit period is kept the same but now two information

bits are transmitted in the same interval of the signaling bit period, the baud rate is still 1200 baud, but the bit rate is now 2400 bps. Therefore it is more accurate to think of baud rate as the signaling bit speed or modulation rate.

In order to reduce the destructive effects of intersymbol distortion, the baud rate must be reduced to a point were propagation anomalies no longer effect the data in a simulcast environment somewhere below 4800 baud, and yet increase the bit rate of the information being sent.

It is the purpose of these tests to investigate advanced modulation schemes and their suitableness for use in a simulcast paging environment.

## 3.0 Test Definition

### 3.1 General Outline

Investigate and evaluate the performance of different digital modulation schemes in a simulcast radio environment.

Type of modulations schemes to be investigated are QPSK, 8PSK, DPSK, 16QAM and 64QAM at baud rates of 600, 1200, 2400, and 4800.

Data bit speeds at 4.8 kBaud.

QPSK: 4.8kBaud x 2 = 9.6 Kbps.

8PSK: 4.8kBaud x 3 = 14.4 Kbps.

16QAM: 4.8KBaud x 4 = 19.2 Kbps.

64QAM: 4.8KBaud x 6 = 28.8 Kbps.

Specific items to be investigated.

1. The ideal baud rate per modulation scheme.
2. Is one modulation scheme inherently less susceptable to intersymbol distortion than another in a simulcast environment.
3. Bandwith requirements for each modulation scheme.

## 3.2 Study Analysis

Study the feasibility of using Spread Spectrum techniques for Advance Architecture Paging. Study advanced FSK schemes such as, Multi-tone On-Off Keying (MOOK), and Code Orthogonal Frequency Division Multiplex (COFDM).

# 4. Test System

## 4.1 General Description

The tests will be conducted using vector signal generators to generate the advance modulation schemes required, since today's paging transmitters are incapable of producing these schemes.

The test receiver will be a spectrum analyzer with a vector modulation analyzer connected to its output to act as a demodulator for the digital modulation scheme under test. A BER test set connected to the output of the VMA will indicate the Bit Error Rate caused by the intersymbol distortion of the simulcast signals of the two vector signal generators.

By imposing a delay in the path of one PRBS signal to its signal generator propagation delays can be simulated.

The data source for the test will be the PRBS generators used in Phase 1.

See Figure 1 for a block diagram of the proposed test configuration.

### 4.1.1 Transmitter

The transmitter block diagram is shown in Figure 2. The transmitter is an HP 8780A Vector Signal Generator operating on a frequency of 931 Mhz. The Vector signal generator is capable of providing the advanced modulation schemes required by the test. Namely, QPSK, 8PSK, 16QAM and 64QAM.

The baseband data is provided by a pseudo random bit generator which can be set to any of the required data rates under test, i.e 600 baud, etc.

### 4.1.2 Receiver

The receiver block diagram is shown in Figure 3. The receiver used for the tests will be an HP 8561B spectrum analyzer the same as used previously for the Phase 1 tests. Connected to its output will be a Noise and Interference test set HP 3708A, feeding an HP 8981B Vector Modulation Analyzer which will serve as the receive demodulator. The output of the Vector modulation analyzer will be connected through a low pass filter to the Bit Error Rate test set to indicate the error rate of the intersymbol distortion.

The use of the Noise and Interference test set will be to measure the SNR and C/I required for each signaling bit for a given Bit Error Rate.

## 4.2 Test Equipment List

| Transmitter | Qty | Vendor | Part# | Status |
|---|---|---|---|---|
| Vector Signal Generator | 2 | HP | 8780A | 1 In House<br>1 Rent |
| PRBS | 2 | PacTel | | In House |

Receiver

| | | | | |
|---|---|---|---|---|
| Spectrum Analyzer | 1 | HP | 8561B | In House |
| Vector Modulation Analyzer | 1 | HP | 8981B | Rent |
| BER Test set | 1 | | | In House |
| Noise & Interference | 1 | HP | 3708 | Rent |

## 5.0 Test Equipment Set Up and Calibration

### 5.1 Equipment Set Up

The 2 Vector HP signal generators used in the tests to simulate the paging transmitters will be allowed to warm-up for a period of 30 minutes before calibration is attempted.

The Spectrum Analyzer will also be allowed a warm up period of 30 minutes.

The BER of the output of the PRBS generators will be checked at the various data rates under test to insure proper operation of the equipment.

### 5.2 Instrument Calibration

All instruments used in the tests will be calibrated to NBS standards.

## 5.3 System Calibration

Before any tests are conducted the test equipment will be allowed to temperature stablize, before any adjustments are made to frequency or signal level.

## 6. Tests

The radiated output of the vector signal generators must be maintained above the receive threshold of the spectrum analyzer in order to obtain meanful data. This may require repositioning of the test equipment until these conditions can be met.

Once an adequate signal level is being received by the sprectrum anaylzer, the output of both vector signal generators will be adjusted to the same level so that the spectrum analyzer is not captured by any one signal generator (This corresponds to the conditions found in an overlap area of a simulcast system).

The baseband signals which will be connected to their respective signal generators.

Once a modulation scheme is under test, measurements will be taken to verify

data rate vs. baud rate

carrier frequency offset

simulation of propagation delays and the ability of the receiver to respond.

## 7. Results

Issues that the test will verify

* Are advance modulation techniques capable of increasing data rates in a simulcast environment.

* Is the BER of one modulation scheme inherently superior to that of another in a simulcast environment.

* How is intersymbol distortion affected by phase delays in advance modulation schemes.

* Does frequency offset improve the BER performance of advance modulation schemes in a simulcast environment.

## 7.1 Results Presentation

The tests results will be presented in a series of graphs.

* BER of data rate vs. baud rate for each modulation scheme. i.e. 600, 1200, 2400, and 4800 baud.

* Comparison of BER versus SNR for each modulation type

* BER of signal delays for data rate vs baud rate for each modulation scheme.

## 8. TimeLine

Key Milestones

| | | |
|---|---|---|
| April 24 | - | Formulate Test Plan Test Document |
| May 1 | - | Approved Test Plan |
| May 29 | - | Order Test Equipment |
| June 12 | - | Receive Test Equipment |
| June 15 | - | Start Tests |
| June 26 | - | Complete Tests |
| June 29 | - | Begin Results Analysis |
| July 03 | - | Finish Results Analysis |
| July 17 | - | Complete Documentation of Results |

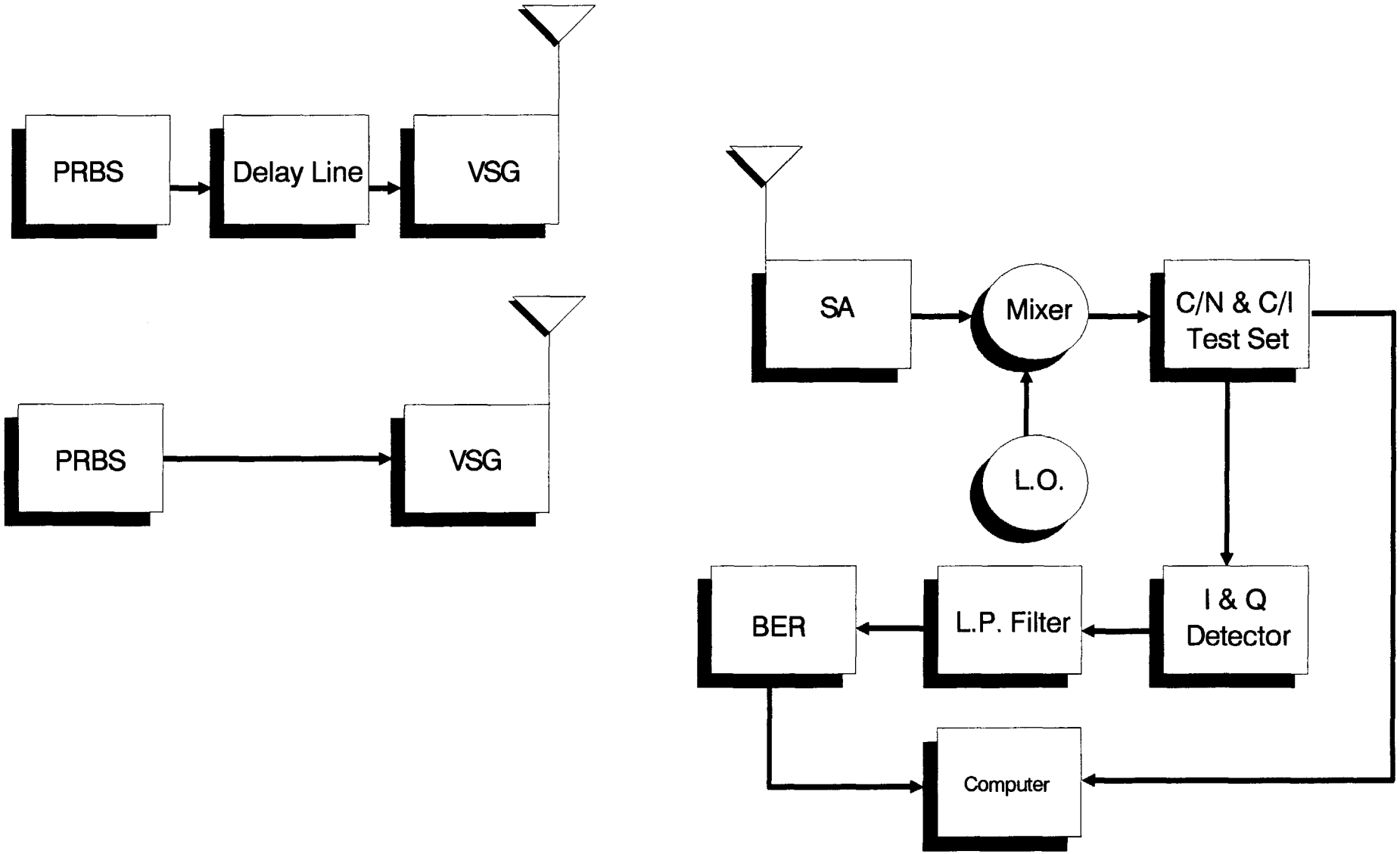


Figure 1 System Block Diagram

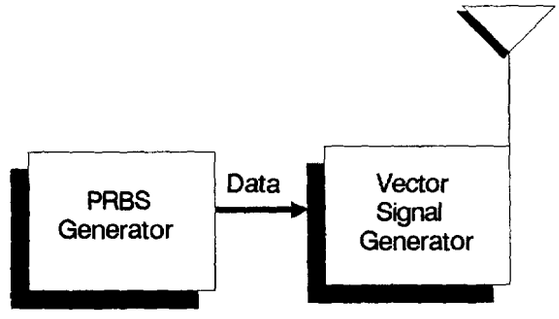


Figure 2 Transmitter Block Diagram

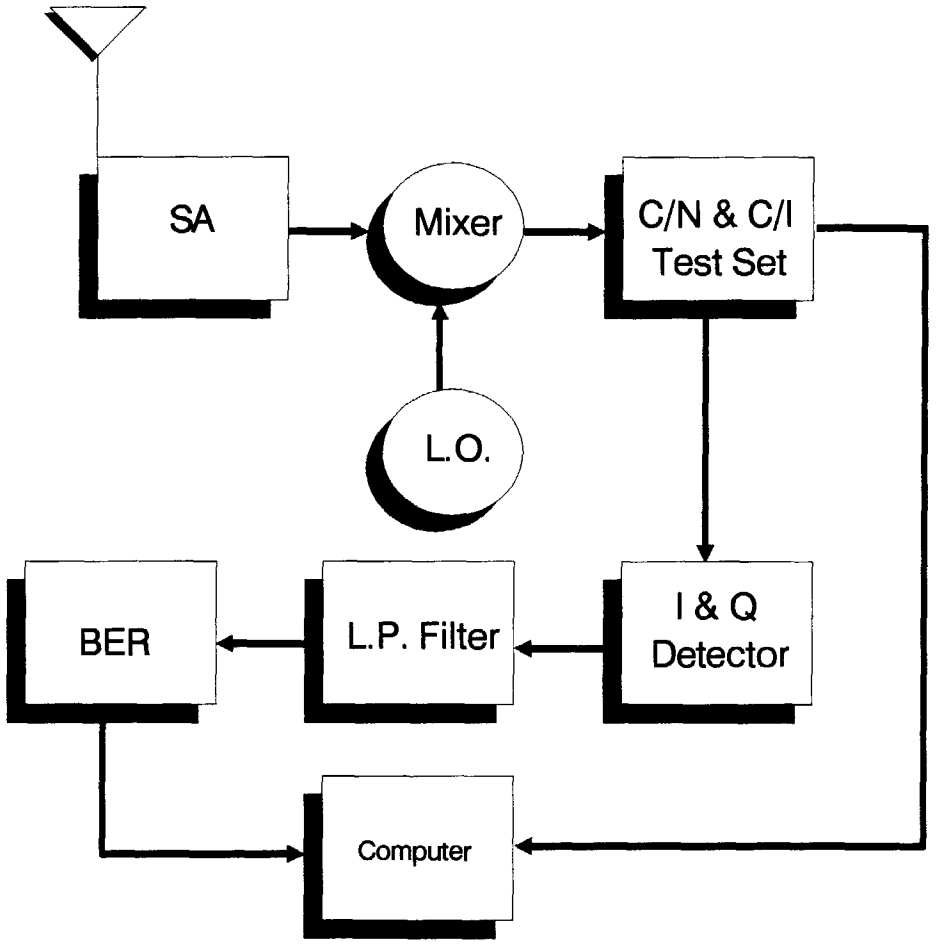


Figure 3 Receiver Block Diagram

CERTIFICATE OF SERVICE

I, Tana C. Maples, hereby certify that on this 16th day of June, 1992, I caused copies of the foregoing REPLY COMMENTS OF PACTEL PAGING to be sent by U.S. first class mail, postage prepaid, or by hand-delivery as specified, to the following:

Thomas P. Stanley*/
Chief Engineer
Office of Engineering and
Technology
Federal Communications Commission
2025 M Street, N.W.
Room 7002
Washington, D.C. 20036

C. E. Baker, Jr.
Arch Communications Group, Inc.
110 Turnpike Road
Suite 210
Westboro, Massachusetts 01581

Frederick M. Joyce
Joyce & Jacobs
2300 M Street, N.W.
8th Floor
Washington, D.C. 20037

Thomas J. Casey
Jay L. Birnbaum
Simone Wu
Skadden, Arps, Slate,
Meagher & Flom
1440 New York Avenue, N.W.
Washington, D.C. 20005-2107

L. Andrew Tollin
Michael Deuel Sullivan
Wilkinson, Barker, Knauer & Quinn
1735 New York Avenue, N.W.
Washington, D.C. 20006

---

*/ By Hand Delivery

William B. Barfield
Charles P. Featherstun
David G. Richards
1155 Peachtree Street, N.E.
Suite 1800
Atlanta, Georgia 30367-6000

Richard E. Wiley
R. Michael Senkowski
David E. Hilliard
Eric W. DeSilva
Wiley, Rein & Fielding
1776 K Street, N.W.
Washington, D.C. 20006

Michael A. Menius
Motorola Government Relations Office
1350 I Street, N.W.
Suite 400
Washington, D.C. 20005

Jeffrey Blumenfeld
Glenn B. Manishin
Blumenfeld & Cohen
1615 M Street, N.W.
Suite 700
Washington, D.C. 20036

Judith St. Ledger-Roty
Nancy J. Thompson
Lynn E. Shapiro
Kathleen A. Kirby
Reed Smith Shaw & McClay
1200 18th Street, N.W.
Washington, D.C. 20036

Glenayre Electronics
4800 River Green Parkway
Duluth, Georgia 30136

Tana C. Maples

Tana C. Maples

DC01 27157