MOBILE TELECOMMUNICATION TECHNOLOGIES CORPORATION (MTel)

Like PageNet, MTel's comments on the rulemaking petitions are premised on a clear misperception of the PIMS proposal. MTel suggests that "PIMS would allow real-time two-way communications between mobiles and the landline network." (MTel Comments, p. 6.) However, the PIMS system is not designed to provide real time, two-way communications between mobiles and the landline network. Because it is a messaging-based technology, it is non-real time, two-way packet data that provides very high subscriber throughput (bytes) and capacity through frequency reuse within major urban areas.

MTel is also mistaken in its suggestion that "the vast majority of petitions show that a 50 kHz channel can serve enormous consumer needs." (MTel Comments, p. 9.) In fact, prior to June 1, MTel was the only proponent of channels in excess of standard 25 kHz paging channelization. All of the remaining proposals use 25 kHz channels, and only Echo Group (5 kHz channels) proposes any deviation from the paging standard. Thus, the vast majority of the petitions show that MTel's request for larger channelization, as discussed above,would limit the Commission's frequency flexibility and does not merit serious consideration.

MTel's most serious mistake, however, is using this slim reed as the basis for its argument that "the Commission should place a heavy burden on those proposals seeking allocations of more than 50 kHz per provider." (MTel Comments, p.9.) MTel's comments are entirely self-serving on a number of critical issues: (1) how the commission should view capacity, i.e., namely nation-wide, and not on a MSA basis; (2) how a channelization plan for 930-931 MHz should be structured with a Commission bias for 50 kHz channels; and (3) how overall frequency grants should be limited to 50 kHz per provider. All of the above criteria

would in effect serve to either preclude other petitions or restrict the implementation of any truly novel, high throughput/capacity system that utilizes the benefits of trunking multiple channels.

MTel's repeated references to its nationwide capacity obscures, as PageMart has pointed out in its initial comments, that NWN is highly frequency inefficient because it cannot practically achieve frequency reuse in high-demand, contiguous urban areas. Therefore, each zone MTel defines for its NWN system is practically one contiguous urban city area such as New York, Los Angeles, Chicago, etc. This leads to the real vulnerability of MTel's system proposal, which is insufficient capacity in the major contiguous metropolitan areas in the country—specifically 800,000 subscribers divided by 57 zones, is approximately 14,000 subscribers per zone. It is inconceivable that the Commission should consider this an adequate use of 50 kHz when MTel's assumptions of an average of 3,000 characters per message per busy hours subscriber could easily be increased by five times as under PageMart's PIMS proposal (i.e., 15,000 characters whereby approximately 100,000 subscribers could be served per 50 kHz of spectrum on PIMS). Hence, NWN may only be capable of handling a fewer than 4,000 subscribers in the major urban areas like New York, Los Angeles or Chicago.

A channelization plan for 50 kHz frequencies as proposed by MTel would be inconsistent with its two neighboring frequency bands set aside for conventional one-way paging, namely 929 to 930 MHz (Part 90) and 931 to 932 MHz (Part 22). This incompatibility can be a significant drawback because it limits the future opportunity to expand advanced messaging services into unused paging spectrum (e.g., Part 90 spectrum) as is possible with PageMart's PIMS proposal (25 kHz

channels). Conversely, the PIMS plan could also allow paging operators to use 930-931 MHz spectrum if reserve frequencies were to become excess spectrum for any reason (i.e., PIMS achieving higher efficiency levels than expected through office cell use).

Given the tremendous growth expected in a wide range of wireless services including messaging, facsimile, graphics, digitized voice paging and consumer paging market opportunities, the Commission needs to carefully weigh the critically important benefits of preserving the 25 kHz channel assignments in this band, as opposed to changing them, and allow the "market place to vote." Indeed, the Commission should place a heavy burden on any applicant wishing to change the 25 kHz channel assignment because of the reduced flexibility the commission has in managing the total 929-932 MHz spectrum going forward. Contrary to MTel's arguments, the amount of spectrum granted per provider in and of itself is not the issue unless MTel's sole concern is securing some portion of the 930-931 MHz frequency band for NWN. The real issue is channelization into 25 kHz versus 50 kHz channel assignments, because it is on this basis that future management and redistribution of spectrum can or cannot be easily accomplished.

PageMart's PIMS proposal is based on a system design utilizing two control channels to implement its spectrally efficient concept of reusing frequencies within major urban areas for maximum throughput and subscriber capacity (up to 500,000 subscriber units requiring 15 K characters per 10 hours busy period per day, per MSA). Therefore,two 25 kHz control channels are needed for either one or 8-10 data transmission channels. Consequently, if the benefits of "cellular-like paging" with acknowledgment and re-transmission capability that permits error corrected

two-way transmission of data (as necessary) are to be realized, more than 50 kHz must be allocated to one provider.

To examine the arbitrary nature of MTel's suggested 50 kHz limit, we should apply the logic to other FCC decisions in the not-too-distant past. For example, where would cellular telephony be today if the Commission would have applied this logic and allocated for instance, 30 channel pairs rather than 300 channel pairs? The clear answer is than it would have destroyed the economic scale of cellular telephony by removing the capability to amortize fixed cell costs over many channels per cell, substantially impaired the benefits of cell site trunking efficiency for throughput and subscriber service levels, and foregone the incentive and overall financial viability of service providers to make the massive investment required to continually upgrade the system to digital technology. The Commission should not risk producing these unacceptable for advanced messaging services.

Indeed, in light of MTel's purported concern with maximizing competitive entry (MTel Comments, p.8), it is very interesting that MTel proposes channelization into 50 kHz segments despite the fact that virtually all of the proposals (except for MobileComm is a carbon copy of MTel's proposed system) are designed for 25 kHz. The only possible reason for such a proposal is to eliminate competing systems as 930-931 MHz options through the procedural gambit of premature and incompatible channelization. Furthermore, MTel's suggestion that only three providers should utilize any given service architecture is purely arbitrary, and will not serve to create an industry base that will support the service with low cost subscriber and network equipment. It is for this reason that PageMart

has asked for 2 nation-wide and 2 local competitors in each market with sufficient spectrum.

To support one to two million subscribers per MSA—not MTel's realistically tiny capacity of 3 X 14,000, or 42,000 subscriber units per MSA, even using MTel's own average message size estimates—should be the Commission's goal in this proceeding. The key issue is "critical mass" with full competition utilizing a system architecture with sufficient throughput and capacity to serve a very large number of customers that will create strong support from many manufacturers world-wide to product and improve all types of equipment over time. Measured against this standard, MTel's NWN cannot come close to providing the capacity necessary to support mass-market data messaging or the economies of scale in equipment manufacturing necessary to drive equipment prices down to levels consistent with mass-merchandising. MTel's NWN, therefore, would from an economic standpoint be destined to serve only a niche role in the marketplace due to its severe and inherent capacity constraints.

ECHO GROUP, LTD.

The voluminous Appendices filed by Echo Group consist almost entirely of support material describing a cellular telephone out-of-voice-band approach to data communications which has been at this same general level of theoretical discussion for several years,[13] and which *no cellular operator has ever implemented,* thus conclusively demonstrating that it remains what it has always been: a technology in search of an application. Further, since the technology has never been seen as

[13] Note that the detailed discussion of the TransTech International comments in the Mobile Data System Progress Report is dated 1989 and 1990.

commercially feasible by cellular system operators with in-place networks, it certainly cannot be commerically feasible to construct a new network solely to support the technology.

Even at this purely theoretical level, the system offers little in the way of improvement. For example, the "system is targeted at short to medium length (10's to 100's of bytes) data messages,"[14] which offer little more than today's alphanumeric paging capabilities. Echo's comments on the comparative spectral efficiency of their proposal and the PageMart proposal fundamentally misses the point. Echo states that "PageMart's proposal . . . is less spectrum efficient than Echo's; PageMart would require 800 kHz for four licensees while Echo's proposal requires only 300 kHz for six licensees." (Echo at 3.) But spectrum efficiency cannot be viewed solely on the amount of spectrum used. Rather, it must be measured on the basis of the amount of total information delivered in a given amount of spectrum. Only if a system can deliver the same number of bits in less available spectrum can it be considered to make more efficient use of the spectrum.[15]

---

[14] *See*, Burce Lusignan, TransTech International comments, section 1.0 of the Mobile Data System Progress Report

[14] Delivering less information in less spectrum does not equate to greater efficiency unless the reduction in spectrum used is greater than the reduction in information delivered.

CONCLUSION

For all these reasons, and for the reasons set forth in PageMart's initial comments, PageMart should be awarded a pioneer's preference in the 930-931 MHz paging reserve band for its proposed Personal Information Messaging Service.

Respectfully submitted,

By: _____

Jeffrey Blumenfeld
Glenn B. Manishin
Mary E. Wand, Telecommunications Consultant
BLUMENFELD & COHEN
1615 M Street, N.W., Suite 700
Washington, D.C. 20036
202 955-6300

Attorneys for PageMart, Inc.

Roger Linquist
Chairman & CEO
PAGEMART, INC.
6688 N. Central Expressway, Suite 900
Dallas, Texas 75206
214 750-5809

Dated: June 16, 1992.

APPENDIX A

The following charts represent the initial system components design based on either commercially available products or modifications of commercial product designs to meet specific system-wide PIMS requirements. PageMart is in the process of determining system software specifications and when complete will identify the most cost-effective computer platform to run on as the system controller and interface to the paging terminal which in turn connects to the PSTN.

The following sections contain a "part list" for the major system components below:

- **Geographic Cell**
- **Building Cell**
- **Office Cell**
- **Subscriber Transceiver Module**

Geographic Cell

General Description

Geographic cells will: transmit on one Polling and eight Data channels; receive on Satellite Channel, Return Link Channel and the eight Data channels. PSTN link for back-up channel of sat link, plus primary link between this cell and system controller for data and C^2 delivery and return.

Operation

Polling channel data is received by satellite channel (PSTN back-up) then processed, re-clocked, POCSAG formatted and transmitted. The Polling channel continuously transmits a POCSAG formatted signal. The Return Link signal is received, processed and sends the response and EOT signals back to the system controller with ARQ to the GC control module for data delivery management. Messages to be transmitted are time and frequency tagged at the system controller and are held in memory at the GC control until transmission time. The GC control module formats data, sets exciter frequency and time controls the data to be transmitted. The exciter modulates the carrier to drive the PAs. The PA outputs are combined and sent to the Tx antennas. An active combiner filters out the Tx signals at the Rx input.

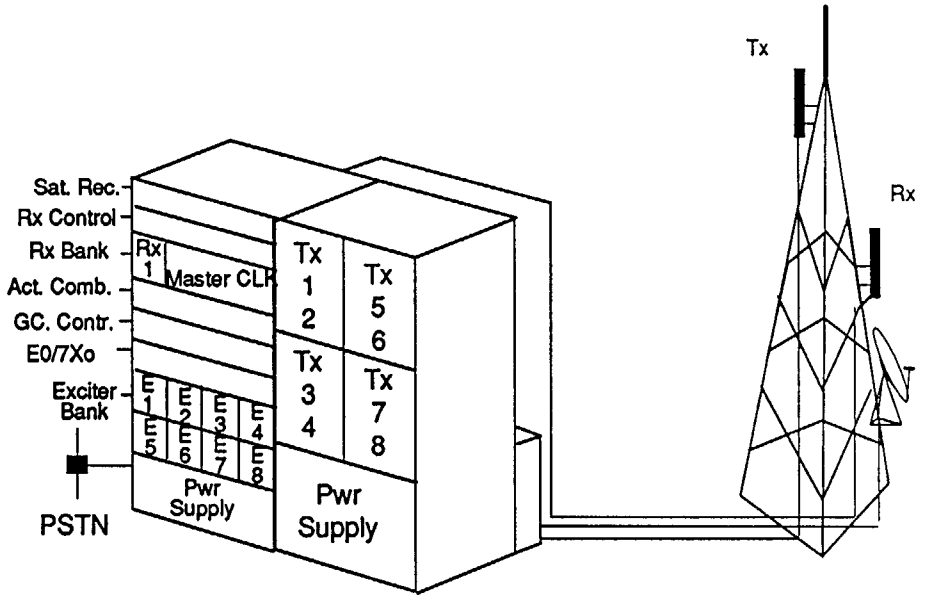

Technical Specifications

Input	• PSTN (V.32 or similar) • KU band sat. • Return link channels (-100dbm)
Output	• PSTN (V.32 or similar) • Forward link channels (1KW ERP/channel)

PageMart

Geographic Cell Transmitter Bay

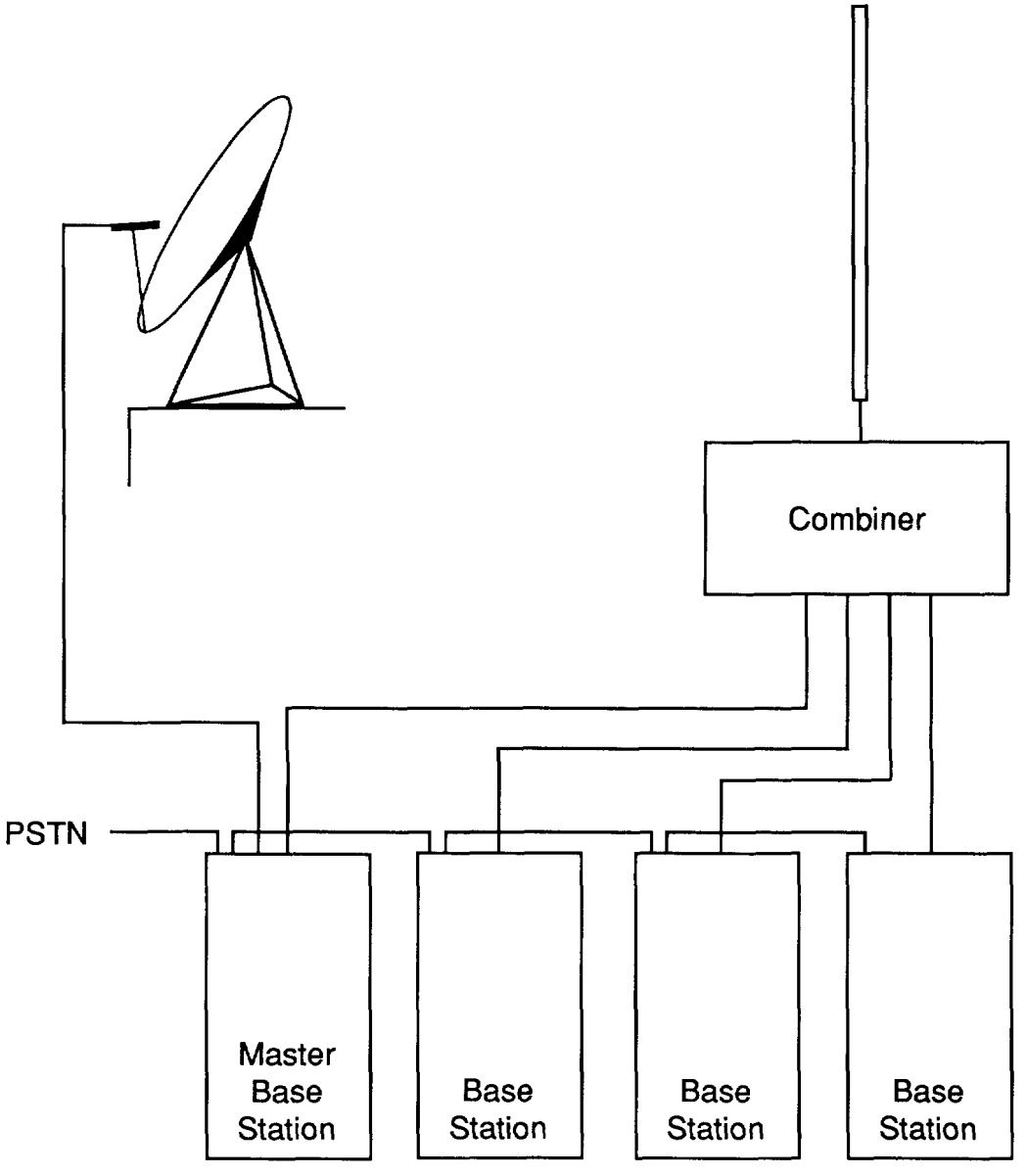

Geographic Cell
Transmitter Master Base Station

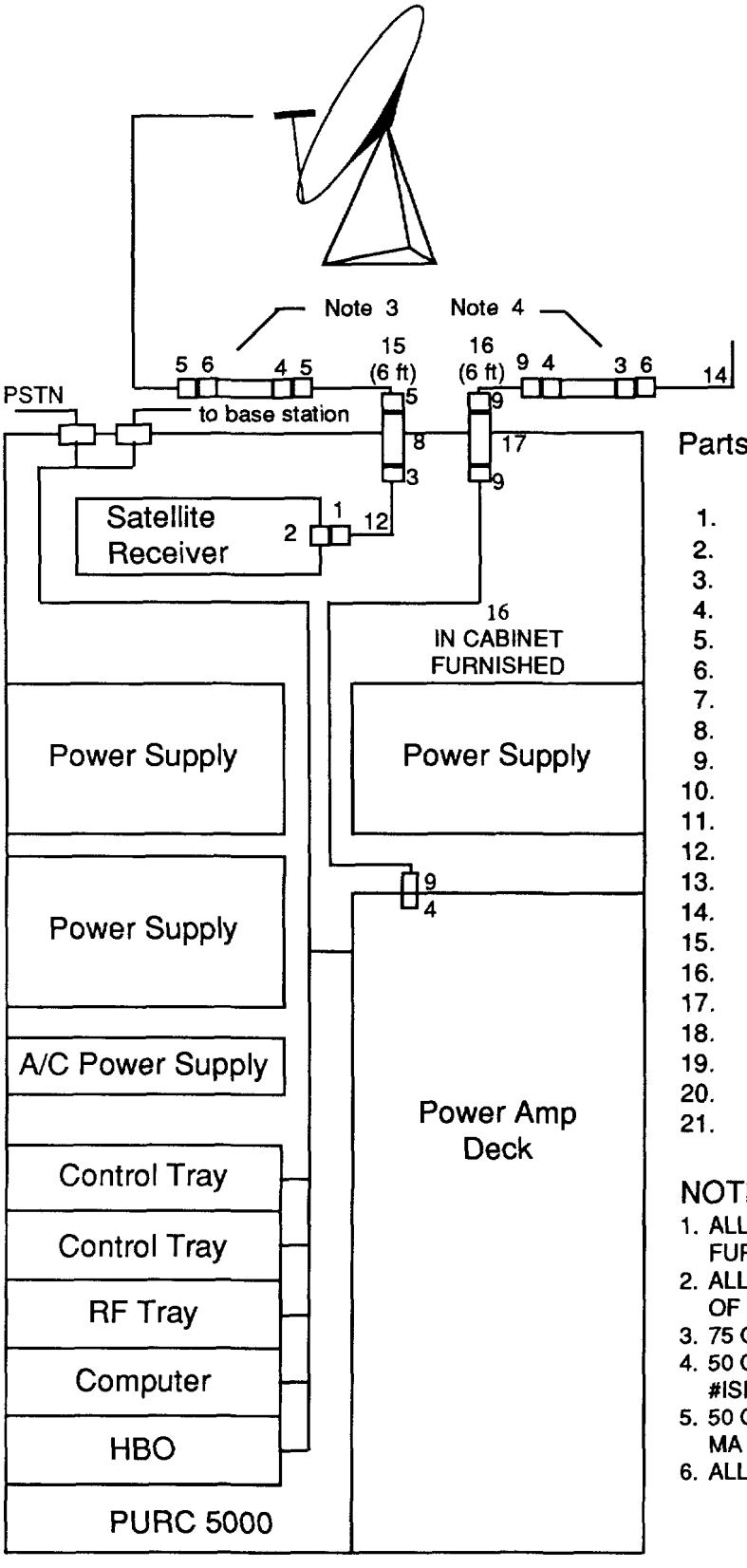

Parts List:

1. F Male
2. F Female
3. N Male
4. N Female
5. N Male 44ASN-70 / L44V-70 Heliax
6. N Female 44ASN-70 / L44N-70 Heliax
7. N Male L44V
8. N Female L45N
9. N Male 44 ASV
10. N Female L44N
11. N Male L44V
12. 75 OHS
13. 1/2" Heliax LDF4-50A
14. 7/8" Heliax LDF5-50A
15. 1/2" Superflex FSJ4-75A / LDF4-75A Heliax
16. 1/2" Superflex FSJ4-50A
17. 50 OHM N/F - N/F Feed Thru
18. 75 OHM N/F - N/F Feed Thru
19. RG142 (6 ft.)
20. BNC Male
21. BNC Female

NOTES:

1. ALL RF FEED THRU'S AND IN-CABINET RF ABILITY ARE FURNISHED WITH STATION
2. ALL RF FEED THRU'S EXIT EITHER THE TOP OR THE SIDE OF THE CABINET DEPENDING ON SITE REQUIREMENTS
3. 75 OHM LIGHTNING ARRESTOR - POLY PHASER #090-0104-A
4. 50 OHM LIGHTNING ARRESTOR - POLY PHASER #ISPT501HN-MA
5. 50 OHM LIGHTNING ARRESTOR - POLY PHASER "ISS0NX-CI-MA
6. ALL RF FEED THRU'S ARE LABELED WITH FREQUENCY

Geographic Cell
Transmitter Base Station

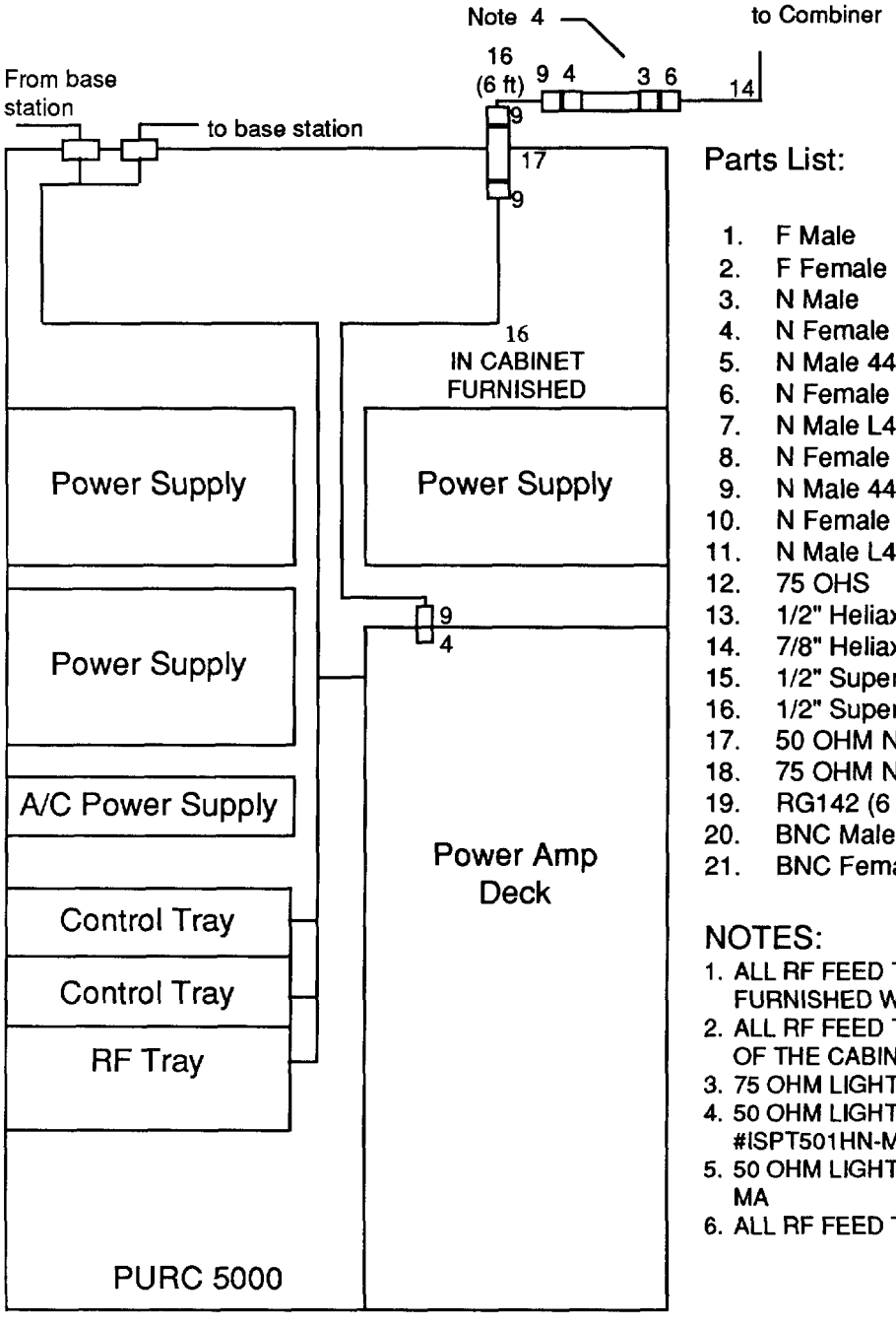

Parts List:

1. F Male
2. F Female
3. N Male
4. N Female
5. N Male 44ASN-70 / L44V-70 Heliax
6. N Female 44ASN-70 / L44N-70 Heliax
7. N Male L44V
8. N Female L45N
9. N Male 44 ASV
10. N Female L44N
11. N Male L44V
12. 75 OHS
13. 1/2" Heliax LDF4-50A
14. 7/8" Heliax LDF5-50A
15. 1/2" Superflex FSJ4-75A / LDF4-75A Heliax
16. 1/2" Superflex FSJ4-50A
17. 50 OHM N/F - N/F Feed Thru
18. 75 OHM N/F - N/F Feed Thru
19. RG142 (6 ft.)
20. BNC Male
21. BNC Female

NOTES:

1. ALL RF FEED THRU'S AND IN-CABINET RF ABILITY ARE FURNISHED WITH STATION
2. ALL RF FEED THRU'S EXIT EITHER THE TOP OR THE SIDE OF THE CABINET DEPENDING ON SITE REQUIREMENTS
3. 75 OHM LIGHTNING ARRESTOR - POLY PHASER #090-0104-A
4. 50 OHM LIGHTNING ARRESTOR - POLY PHASER #ISPT501HN-MA
5. 50 OHM LIGHTNING ARRESTOR - POLY PHASER "ISS0NX-CI-MA
6. ALL RF FEED THRU'S ARE LABELED WITH FREQUENCY

Geographic Cell Receiver Bay

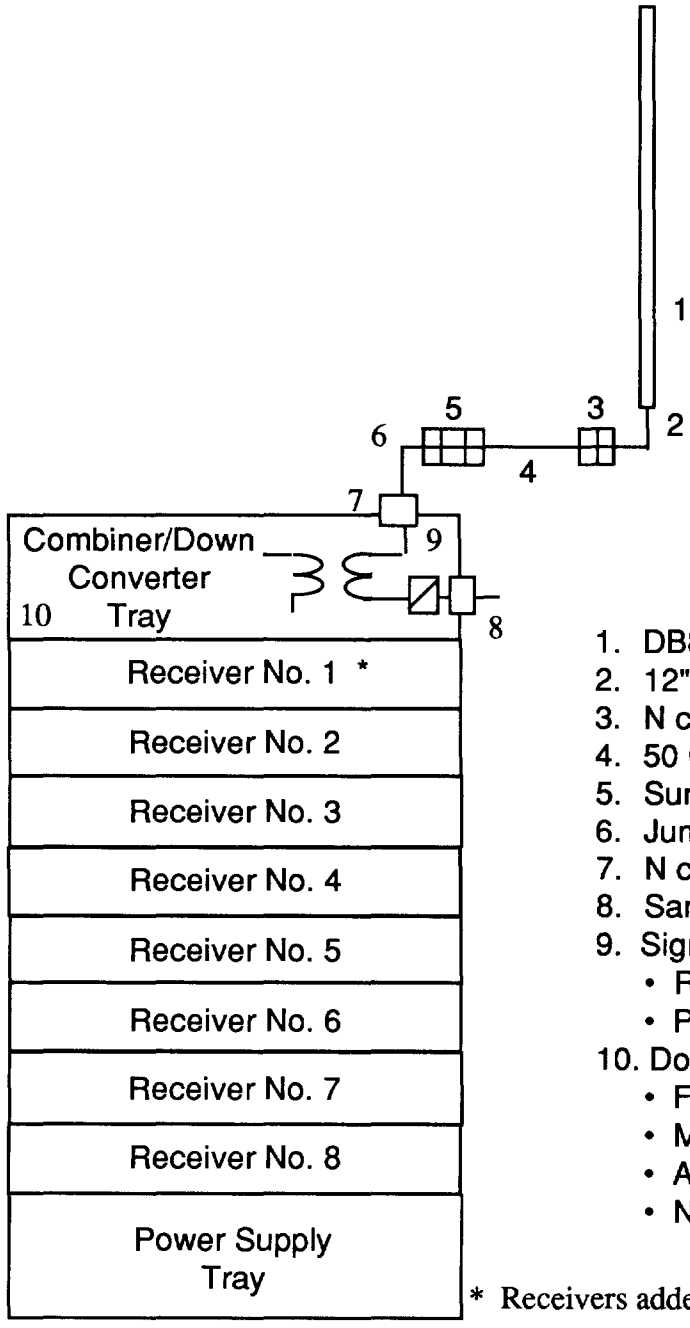

1. DB809
2. 12" jumper cable
3. N connector pair
4. 50 OHMS 1/2 helix
5. Surge suppressor
6. Jumper cable
7. N connector feed through
8. Sampling cabling
9. Signal enhancement circuit
   - RF Combiner Loral 4426-Z
   - Phase/
10. Down Converter
    - Fitter RxTx 11-88-01
    - Mixer WJ M9E
    - Amp Motorola PAM-1-5-29-2
    - N-Way Loral Mo-100

* Receivers added as required

Building Cell (BC)

Functional

The building cell (BC) will vary in configuration due to requirements and constraints. It will also function different than the OC. A fully assigned BC will have a satellite and PSTN linking for entry into and exit from that building cell. The fully configured BC will transmit the Polling channel and have eight (8) Data channels plus the Returnk Link receiver channel. Now, for the non-fully configured BC examples: If the polling channel is present throughout the building from a geographic cell, then the building cell polling channel can be excluded. In buildings where the sallite dish cannot be installed and/or PSTN-only data delivery is more cost-effective - no satellite dish receiver-based input is installed. In this case, time can be acquired via GPS, NBS, and OMEGA-like radio receiver sources or local 24HR broadcast stations including FM and TV, or the no receiver case where time is acquired over the phone line, such as the NBS system approach.

Operational

The satellite link provides timing plus Polling channel signals and forward link data. The demodulated sat data is processed, stored and the timing signals synchronize the formatter. The Polling channel data is formatted and transmitted. Return Link location response signals are processed and sent to the system controller over PSTN, and ACK signals are processed for continued transmission of data to that unit and sending re-transmission requests and transmission completion (EOT) to system controller. When time to transmit occurs for a channel, that file is pulled and transmitted per instructions. Data channel transmission will stop if an ACK/NAK is not received after packets have been transmitted and notify the system controller. When an ACK is received, transmission will continue until EOT is detected. The EOT is sent back to the system controller.

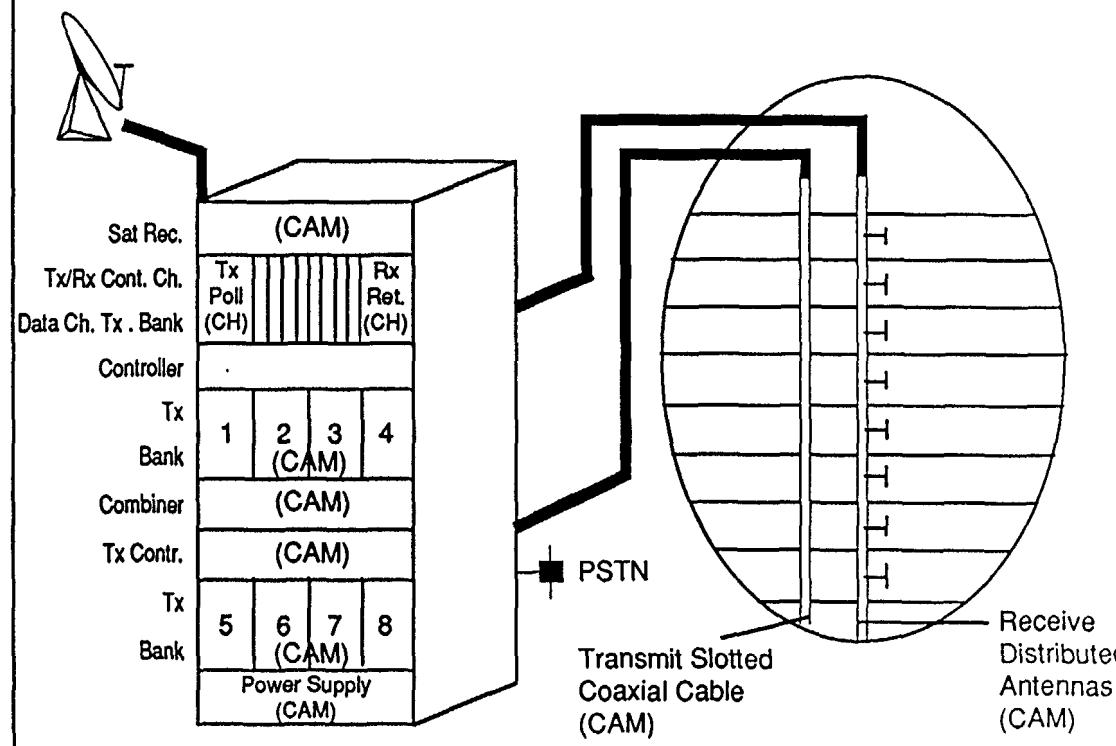

Technical Specifications

Input:
- KU Band Sat. Rec: alt [GPS, TDRS, OMEGA, TV, FM]
- PSTN (V.32 or similar modem
- 930 MHz Return Link (-100 dbm)

Output:
- PSTN (V.32 or similar)
- 930 MHz Forward Link (10W)

Size: Rackable Configuration

PageMart

Building Cell

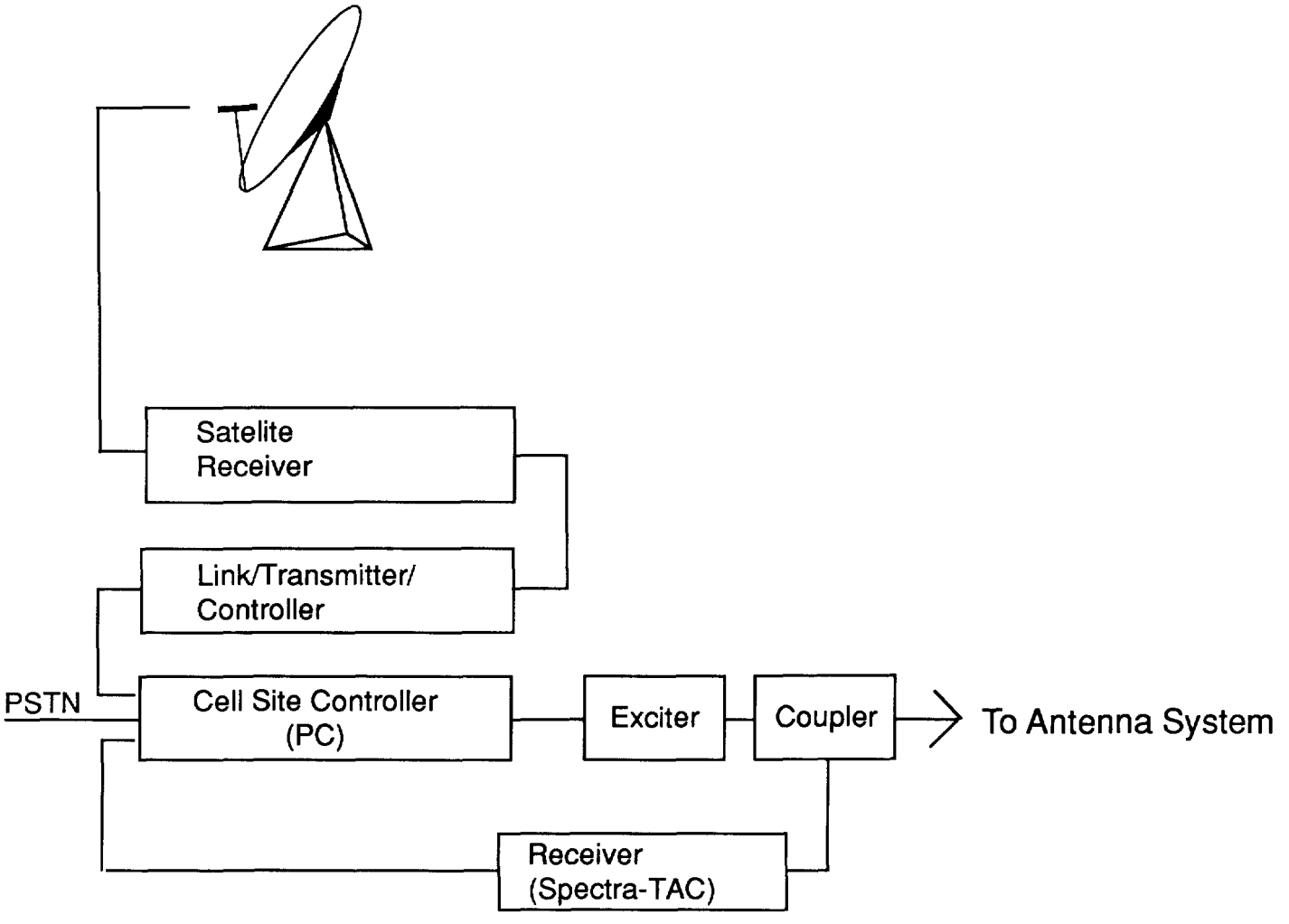

Description	Manu.	Part #
Coupler	LORAL	4426 - 1
Exciter	Motorola	TRN9270A (Freq. Synth)
		TUF1580DA (RF Tray)
		TLF 1363A (IPA)
Receiver	Motorola	Spectr TAC
PC	INTEL	
Link/Tx Contr.	Complex	NIU
Sat. Rec.	Space Com.	M2000A
Sat. Ant.	Channel Master	1.0 M KU-Band
LNB	NORSAT	6300

MicroFill™

Structure Specific Coverage

Decibel
Multi
Media
Microcell
Systems

WHERE COMMUNICATION TECHNOLOGIES MEET

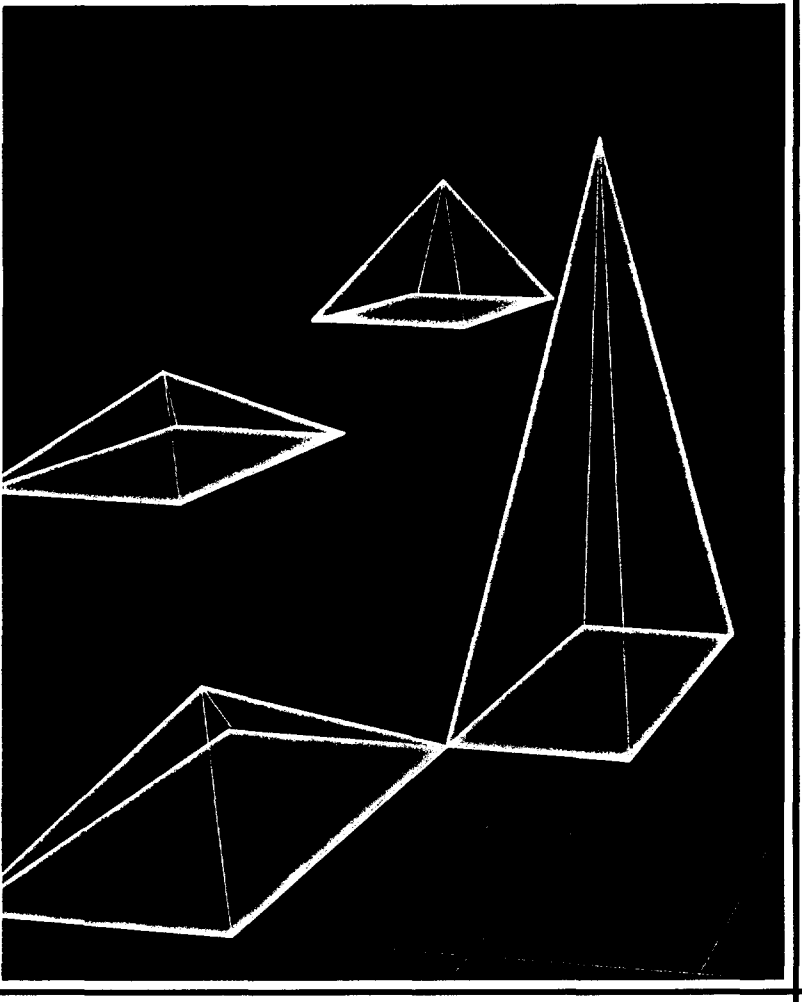

Improve In-Building Coverage And Add Cellular Subscribers.

Anyone who uses hand-held cellular phones understands the frustration of dropped calls and poor or scratchy voice quality. Equally annoying is the inability to make calls inside buildings, subway stations, pedestrian tunnels and other covered structures—particularly when these are often the very places from which calls need to be made.

Fortunately, there's a solution: MicroFill from Decibel Products, an RF distribution system specifically designed to provide basic service or microcellular coverage inside buildings, tunnels and other such structures.

Provide Clean, Clear Signals With Reduced Interference.

Currently, cellular coverage inside buildings and other structures is provided by radiating a signal from a nearby cell site that is strong enough to penetrate exterior walls and saturate the interior. Unfortunately, this power approach to in-building coverage often causes interference to other calls in the network. Such interference occurs because direct and reflected RF signals from the high-power site reduce the signal-to-interference ratio in cells which use the same frequencies. As a result, system capacity is limited and call quality lowered.

MicroFill, on the other hand, is designed to counter co-channel interference, thereby allowing system operators to provide the higher quality of service today's cellular customers demand. MicroFill uses state-of-the-art amplifiers, 75 ohm coaxial cable and specially designed antennas to distribute precisely controlled RF signals throughout the desired area. The result is clear, clean communications with little or no interference to co-channel cells.

Cost Savings As Much As 75% With No Performance Loss.

The MicroFill system uses a 75 ohm coaxial cable distribution system. In many buildings, 75 ohm cables have been pre-installed for use with CATV and LANs. With 75 ohm cable, a cost savings of up to 75 percent over current 50 ohm cables of equal electrical specifications is possible. Since the amplifiers and the antennas are designed for 75 ohm impedance, no electrical performance is sacrificed.

By utilizing a distributed gain/radiation system, only the required amount of signal is radiated at various locations inside a structure to provide coverage. Buildings with no coverage can be provided with cellular service easily and cost effectively. Buildings already served by high-powered sites can continue to be served while power and interference are reduced.

In high-use environments, such as downtown office buildings, network capacity can be increased by "off loading" in-building users to a MicroFill system served by a dedicated cell. In conjunction with

Decibel's MicroLite™ Fiber Optic Microcell System, the dedicated cell can serve several buildings.

MicroFill Handles TDMA, CDMA And Narrow Band As Well As Analog.

The MicroFill system is designed to be transparent to the cell site. This ensures that the investment in Decibel equipment will continue to perform even if you change MTSO or base station suppliers. High linearity throughout the system ensures compatibility with TDMA, CDMA and N-AMPS as well as analog systems. This linear design supports both today's analog systems and tomorrow's digital modulation scheme.

MicroFill Installs Easily and Economically At Many Convenient Locations.

MicroFill's 75 ohm cables are designed for in-building distribution and are therefore easy to install. DC power is supplied to the in-line amplifiers through the coaxial cable. This further reduces the cost of installation, since in most cases an electrician is not required. The power source supplying the amplifiers is placed in an equipment closet and plugged into a standard electrical outlet. Uplink and downlink directional couplers provide easy setup and maintenance, as well as monitoring points in the system.

Omni and directional antennas are available to equalize coverage and signal strength. The antenna radomes are designed to be as inconspicuous as possible, looking no more objectionable than a smoke detector.

MicroFill is a member of Decibel Products' Multi Media Microcell Systems family. It is designed to work with other products including MicroLite, a fiber optic microcell system, the 16-Channel DB4416 Power Combiner, PrismPlus repeaters and a selection of specialized low-profile interior and exterior antennas. Together, these products provide cellular system engineers with the tools to meet the challenges of today's subscribers while building the foundation for future personal communications networks.

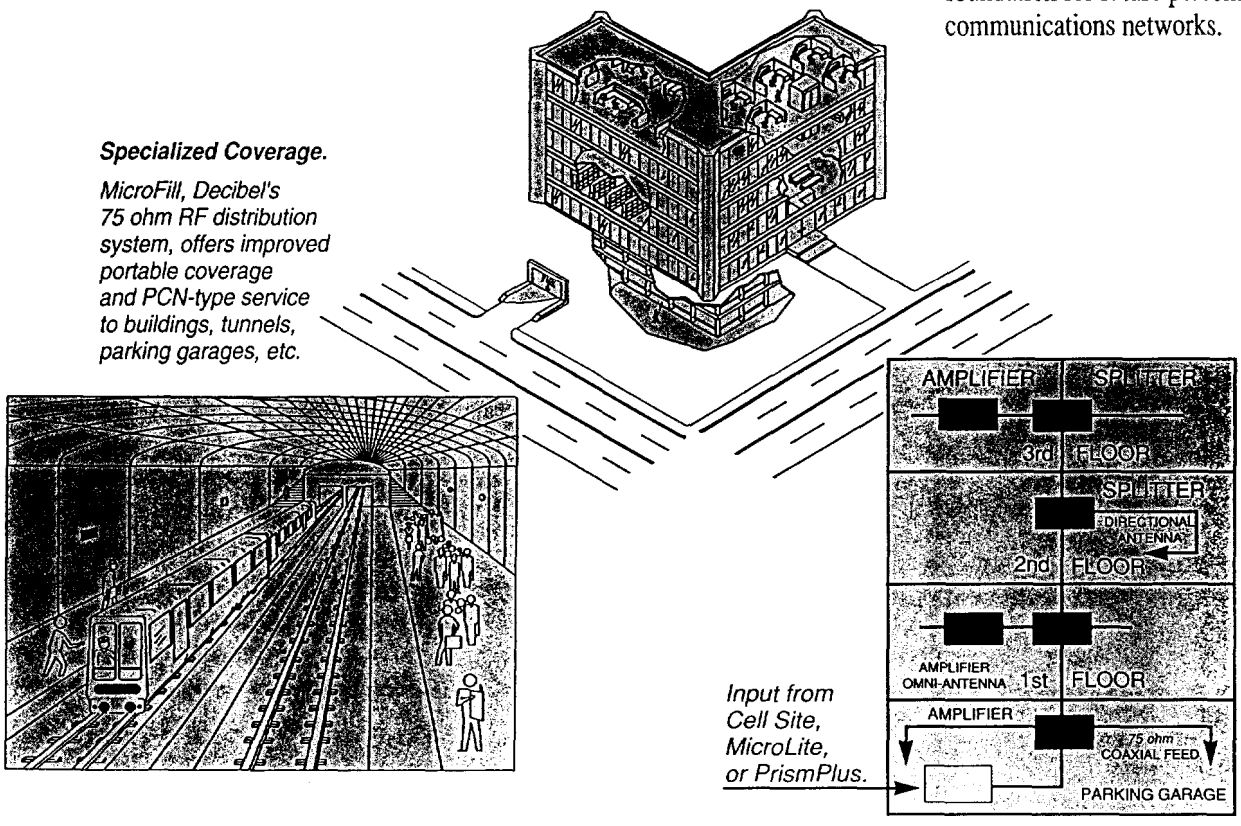

Specialized Coverage.

MicroFill, Decibel's 75 ohm RF distribution system, offers improved portable coverage and PCN-type service to buildings, tunnels, parking garages, etc.

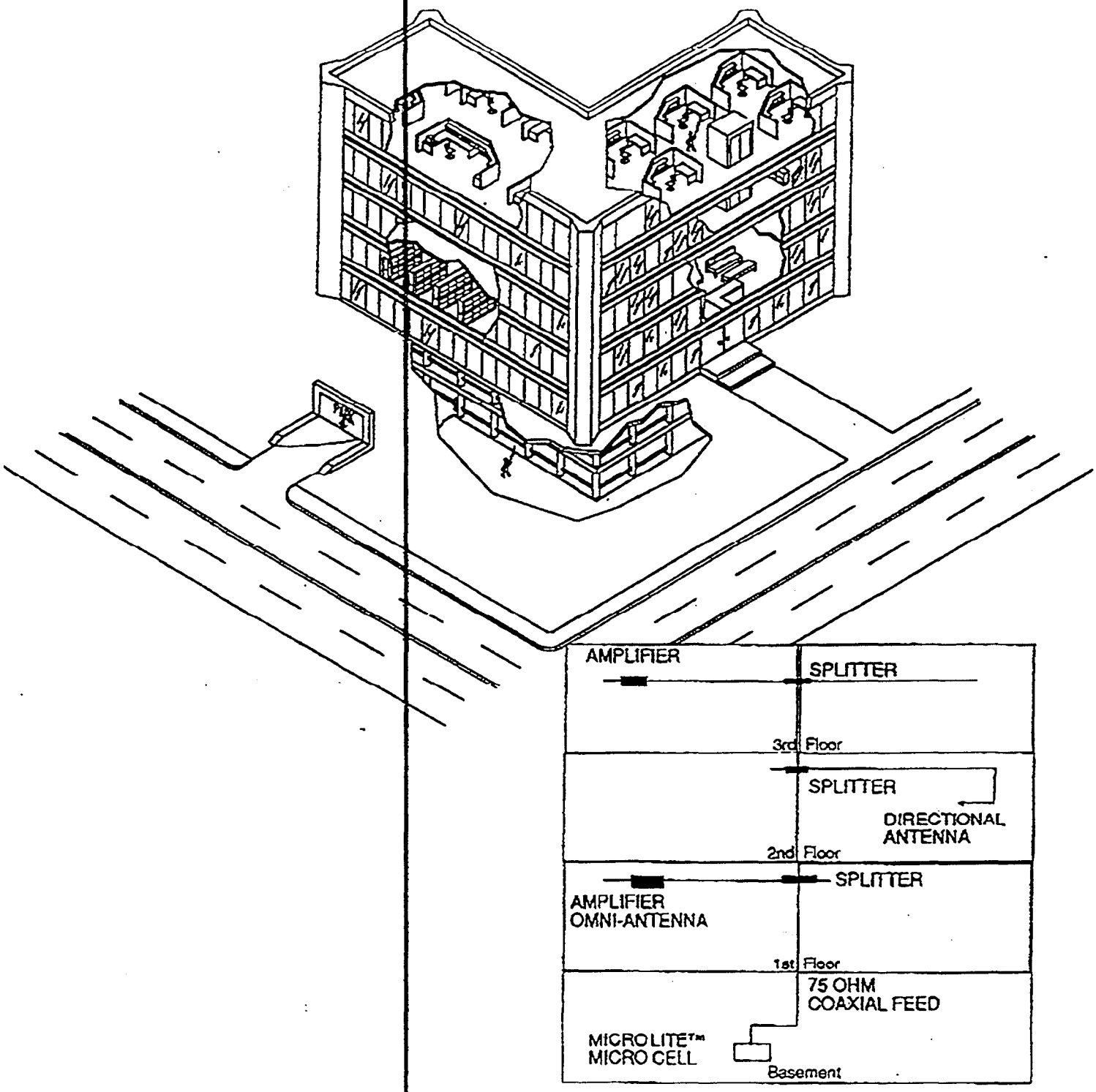

Micro Lite™ Fiber Optic Microcells combined with Decibel's 75 ohm RF distribution system offer improved portable coverage and PCN type service to buildings, tunnels, parking garages, etc.

DECIBEL PRODUCTS

Micro Fill Indoor Antenna

DB781S50N-C, DB781S75F-C

Model Number	DB781S50N-C	DB781S75F-C
Impedance	50 ohms	75 ohms
Termination	Type N-Female	Type F-Female
Frequency Range	824-894 MHz	
Gain	1.0 dBd or 3.1 dBi	
VSWR	<1.5:1	
Pattern Characteristic	"Butterfly" pattern with freespace null directly below antenna	
Polarization	Perpendicular to C-C plane	
Max. Input Power	50 Watts	
Other Information	Application: Indoor Tx/Rx	
Weight	1.7 lbs	
Material	Back Panel: Brass Radiating Elements: Brass Radome: ABS Plastic	
Color	Off-White	
Mounting	Four mounting holes in backplate.	
Packing Size	12" x 12" x 12"	
Shipping Weight	2.7 lbs	

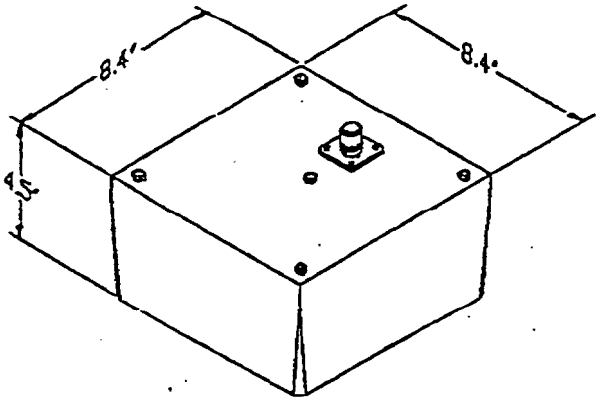

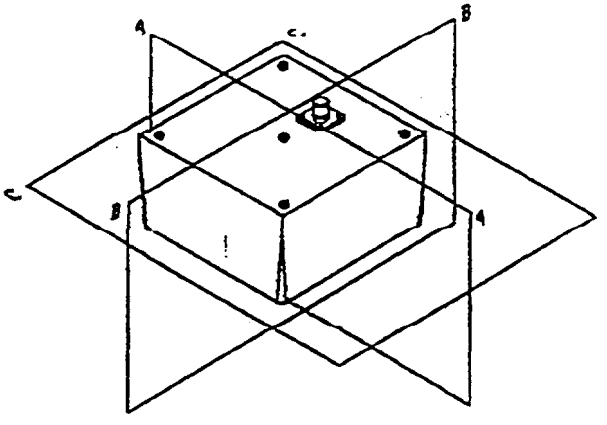

Plane A-A

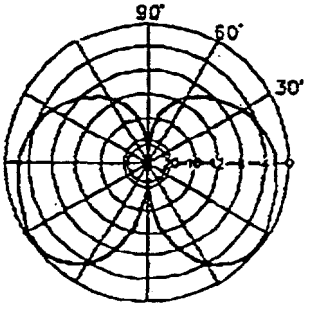

Plane B-B

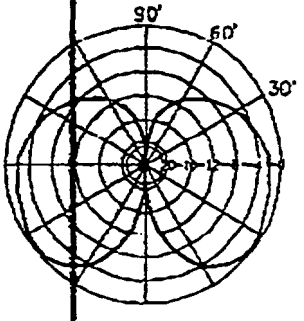

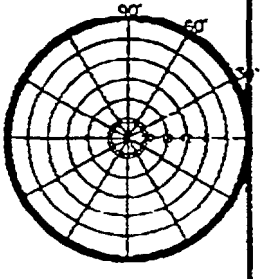

Plane C-C

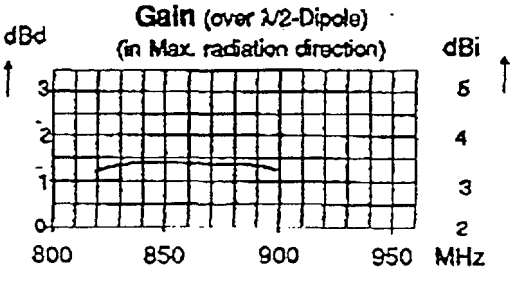

DECIBEL PRODUCTS

Micro Fill Indoor Antenna
DB781D50N-C, DB781D75F-C

Model Number	DB781D50N-C	DB781D75F-C
Impedance	50 ohms	75 ohms
Termination	Type N-Female	Type F-Female
Frequency Range	824-894 MHz	
Gain	> 4.0 dBd or >6.1 dBi Max in A-A and C-C plane	
VSWR	<1.5:1	
Beamwidth (3 dB from max)	225° N.A. N.A.	A-A plane B-B plane C-C plane
Polarization	Perpendicular to C-C plane	
Max. Input Power	50 Watts	
Other Information	Application: Indoor Tx/Rx	
Weight	2.2 lbs	
Material	Back Panel: Radiating Elements: Radome:	Brass Brass ABS Plastic
Color	Off-White	
Mounting	Four mounting holes in backplate.	
Packing Size	12" x 12" x 12"	
Shipping Weight	3.2 lbs	

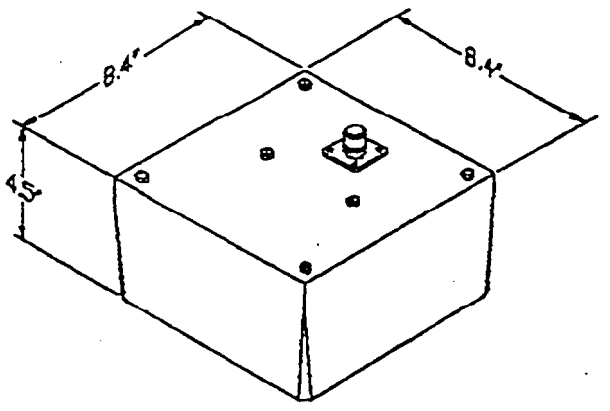

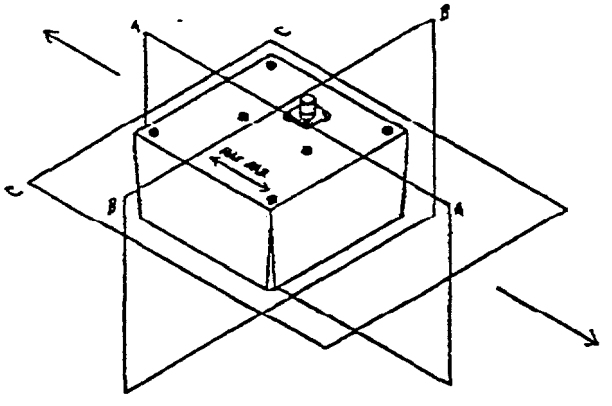

Plane A-A

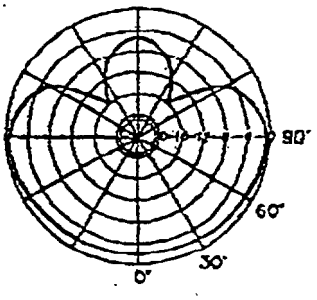

Plane B-B

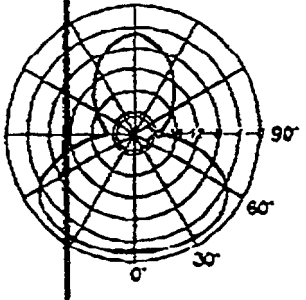

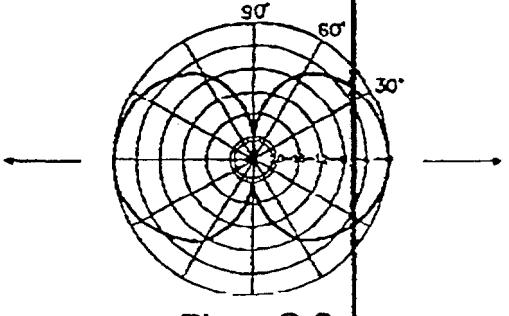

Plane C-C

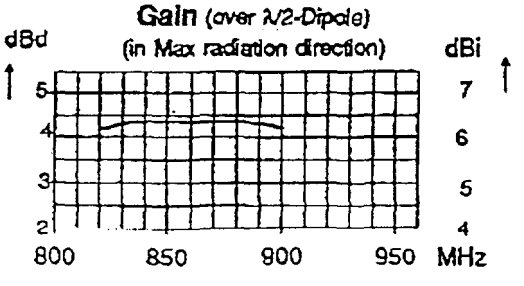

DECIBEL PRODUCTS

Micro Fill Indoor Antenna

DB781LP50N-C, DB781LP50F-C

Model Number	DB781LP50N-C	DB781LP50F-C
Impedance	50 ohms	75 ohms
Termination	Type N-Female	Type F-Female
Frequency Range	824-894 MHz	
Gain	> 6.5 dBd or >8.6 dBi	
VSWR	<1.5:1	
Beamwidth (3 dB from max)	70° A-A plane 90° B-B plane 85° C-C plane	
Polarization	Perpendicular to C-C plane	
Max. Input Power	50 Watts	
Other Information	Application: Indoor Tx/Rx >10 dB F/B ratio	
Weight	1.7 lbs	
Material	Back Panel: Brass Radiating Elements: Brass Radome: ABS Plastic	
Color	Off-White	
Mounting	Four mounting holes in backplate.	
Packing Size	12" x 12" x 12"	
Shipping Weight	2.7 lbs	

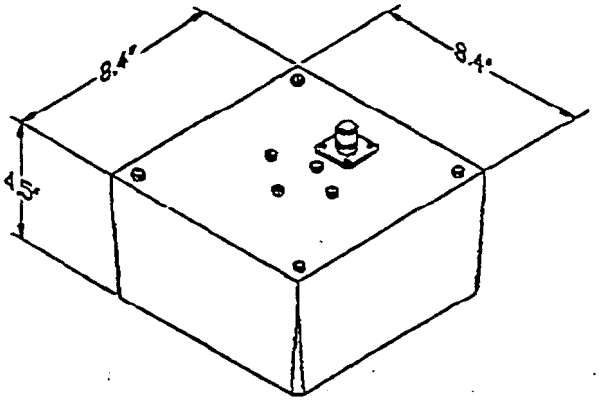

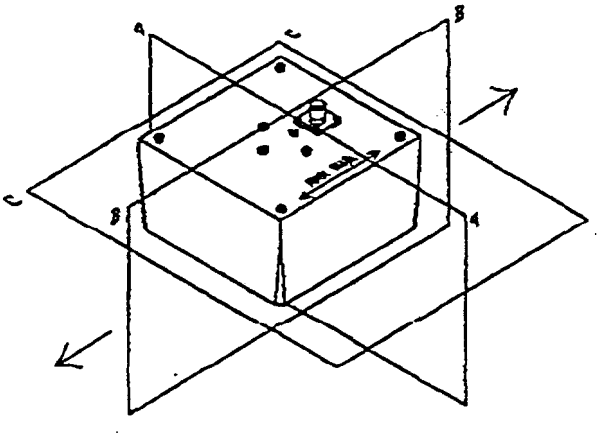

Plane B-B

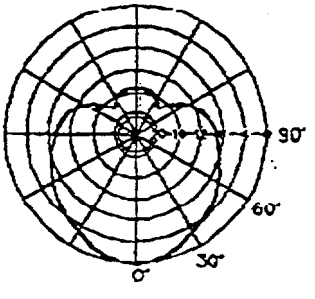

Plane A-A

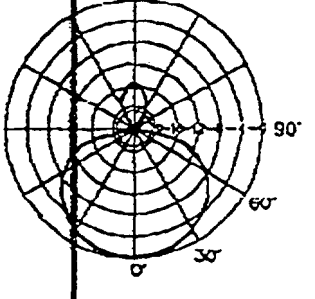

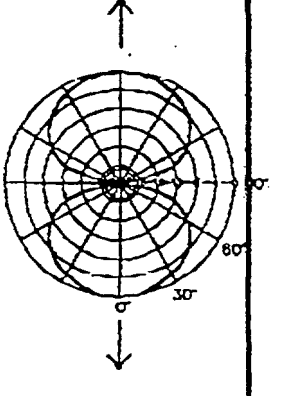

Plane C-C

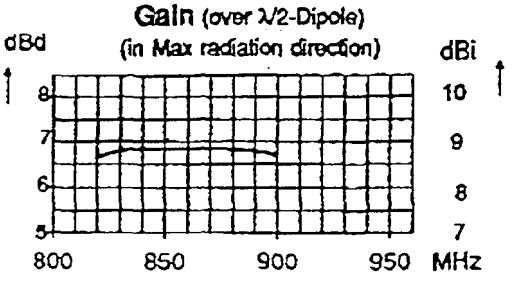

DECIBEL PRODUCTS

Micro Fill Indoor Antenna

DB791S50N-C, DB791S75F-C

Model Number	DB791S50N-C	DB791F75F-C
Impedance	50 ohms	75 ohms
Termination	Type N-Female	Type F-Female
Frequency Range	824-894 MHz	
Gain	>6.0 dBd or >8.1 dBi	
VSWR	<1.5:1	
Beamwidth (3 dB from max)	80° 120° 105°	A-A Plane B-B Plane C-C Plane
Polarization	Perpendicular to C-C plane	
Max. Input Power	50 Watts	
Other Information	Application: Indoor Corner Tx/Rx with >10 dB Front to Back Ratio	
Weight	1.4 lbs	
Material	Back Panel: Radiating Elements: Radome:	Brass Brass ABS Plastic
Color	Off-White	
Mounting	Four mounting holes in backplate.	
Packing Size	12" x 12" x 12"	
Shipping Weight	2.4 lbs	

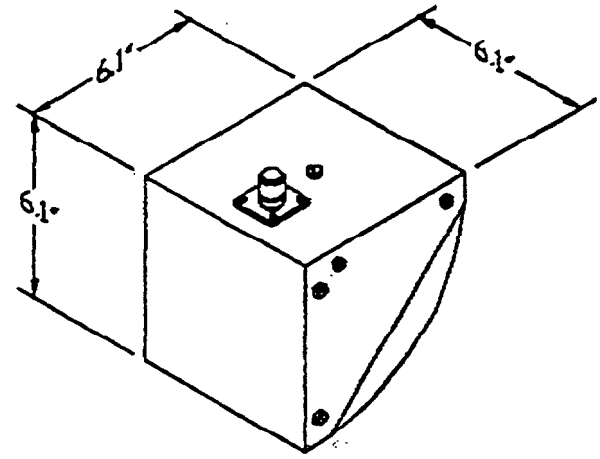

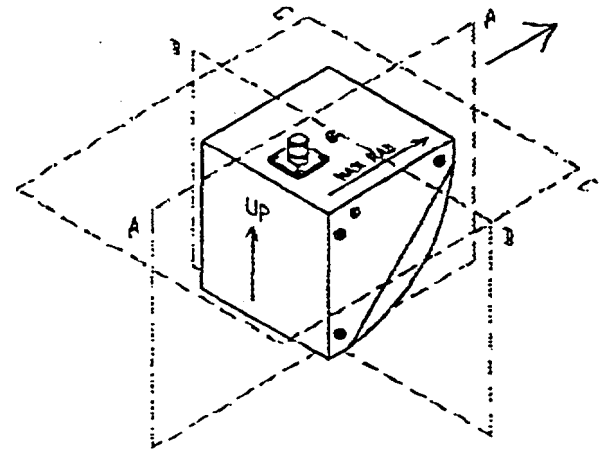

Plane A-A

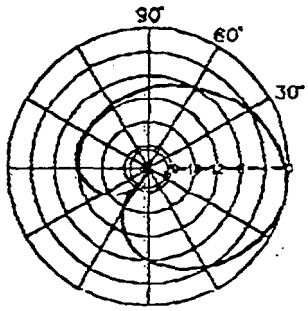

Plane B-B

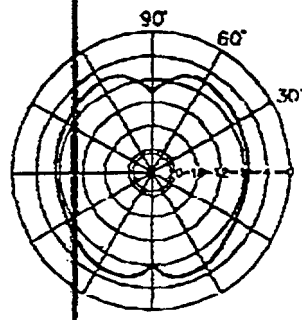

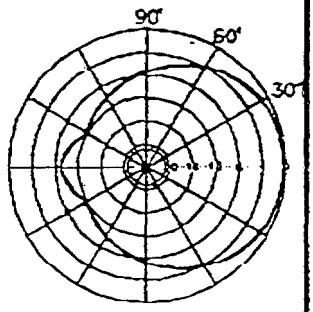

Plane C-C

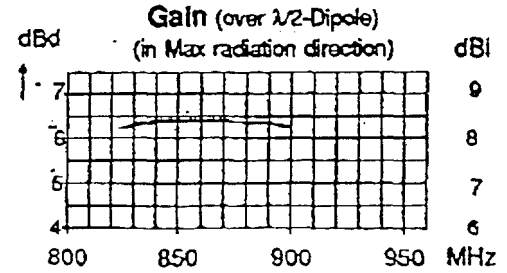

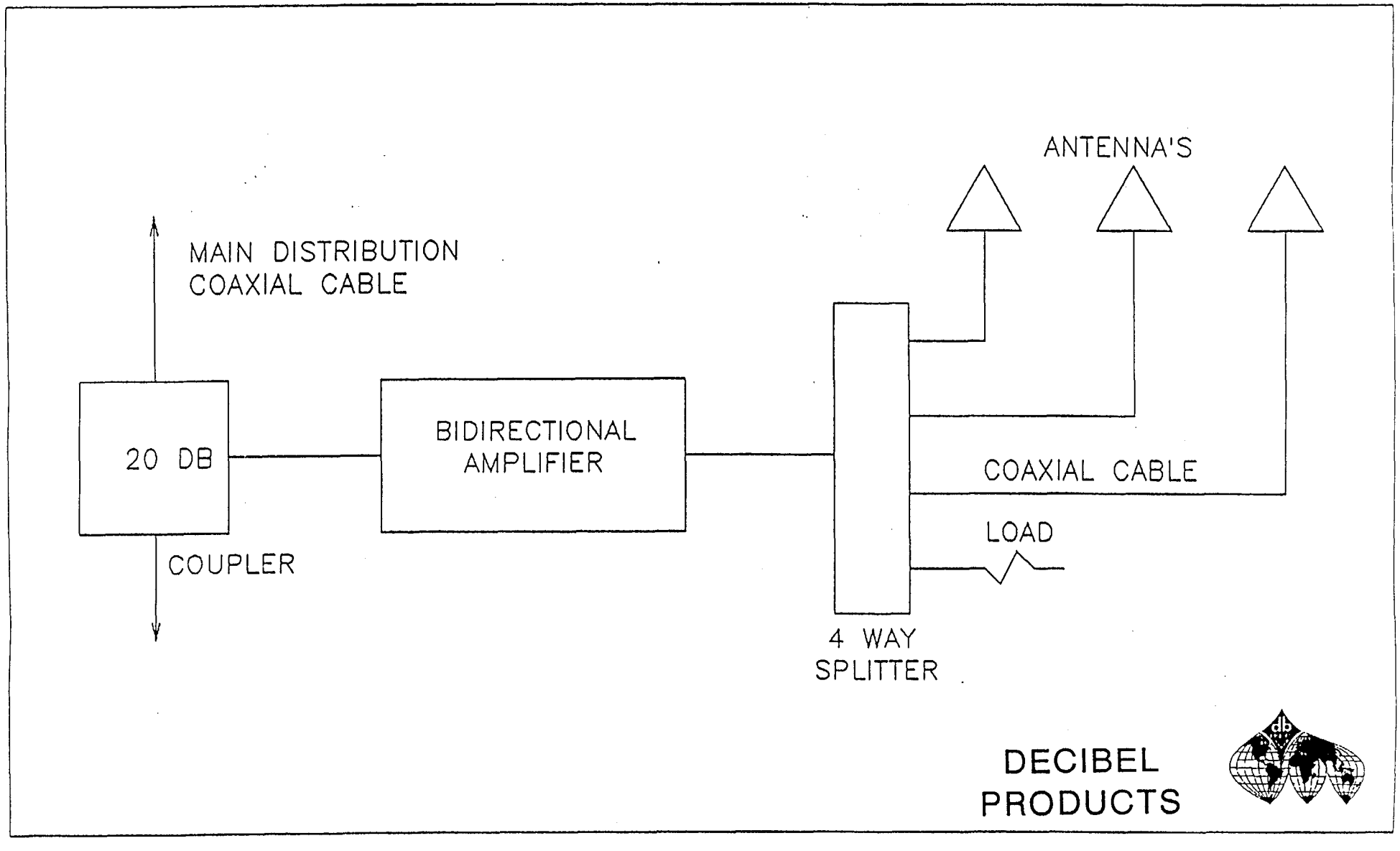
ANTENNA'S
MAIN DISTRIBUTION
COAXIAL CABLE
20 DB
BIDIRECTIONAL
AMPLIFIER
COAXIAL CABLE
LOAD
COUPLER
4 WAY
SPLITTER
DECIBEL
PRODUCTS

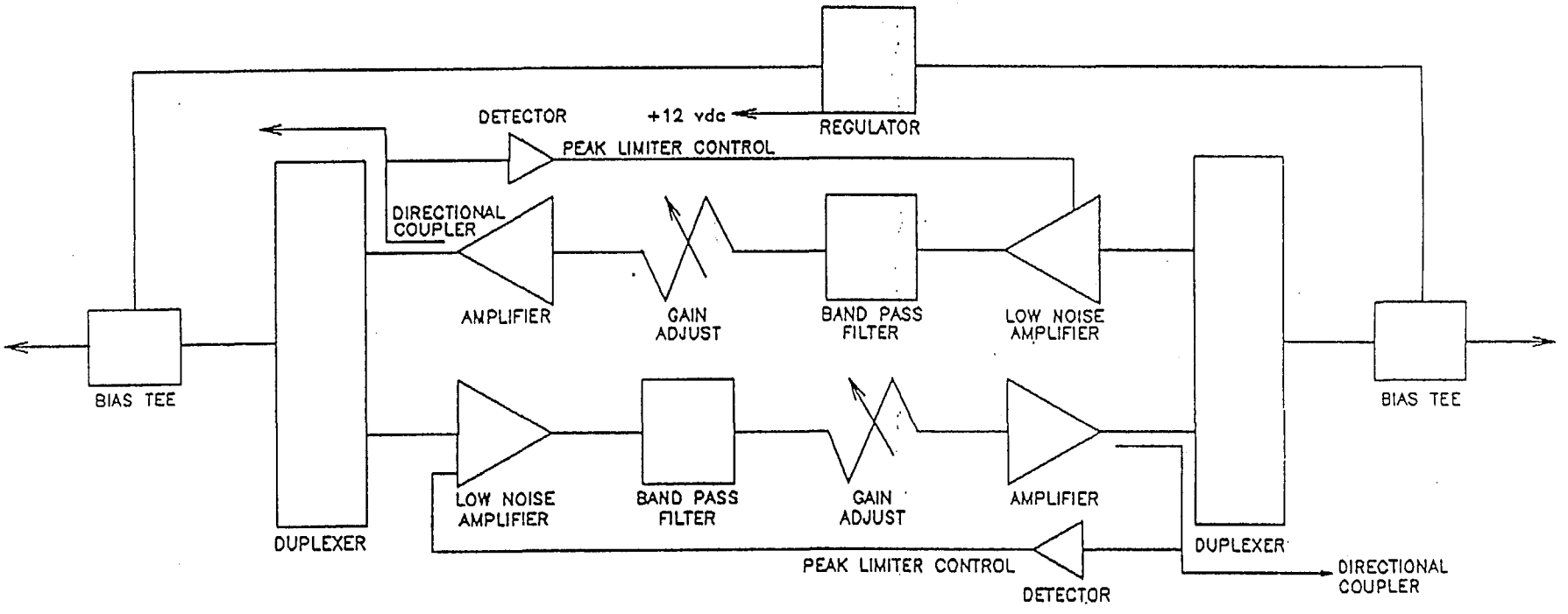

BUILDING DISTRIBUTION SYSTEM

BIDIRECTIONAL AMPLIFIER SYSTEM W/DC BIAS

9/02/91

DECIBEL PRODUCTS