well known. In this particular application, the pilot signal is used by the mobile units for initial synchronization of the mobile unit receiver. The pilot signal is also used as a phase and frequency reference and a time reference for demodulation of the digital speech signals transmitted by the cell-site.

In the present invention, each mobile unit estimates the path loss in signals transmitted from the cell-site to the mobile unit. In order to make this signal path loss estimate, the power level of the cell-site transmitted signals, as received at the mobile unit, are measured. The mobile unit thus measures the pilot signal power as received from the cell-site to which the mobile unit is communicating. The mobile unit also measures the power level sum of all cell-site transmitted signals as received at the mobile unit. The power level sum measurement as described in further detail later herein, is necessary to handle cases in which the mobile unit might temporarily obtain a better path to a more distant cell-site than to a normally preferred closest cell-site.

The outbound link path loss estimate is filtered using a non-linear filter. The purpose of the non-linearity in the estimation process is to permit a rapid response to a sudden improvement in the channel while only allowing a much slower response to a sudden degradation in the channel. The mobile unit in response to a sudden improvement in the channel thus suddenly reduces mobile unit transmitter transmit power.

Should the channel for one mobile unit suddenly improve, then the signal as received at the cell-site from this mobile unit will suddenly increase in power. This sudden increase in power causes additional interference to all signals sharing the same wide band channel. A rapid response to the sudden improvement will thus reduce system interference.

A typical example of a sudden improvement in the channel occurs when a mobile unit is moving through an area that is shadowed by a large building or other obstruction and then drives out of the shadow. The channel improvement, as a result of the vehicle movement, can take place on the order of a few tens of milliseconds. As the mobile unit drives out of the shadow, the outbound link signal as received by the mobile unit will suddenly increase in strength.

The outbound link path loss estimate at the mobile unit is used by the mobile unit to adjust the mobile unit transmitter power. Thus, the stronger the received signal, the lower the mobile unit transmitter power will be. Reception of a strong signal from the cell-site indicates that the mobile unit is either close to the cell-site or else an unusually good path to the cell-site exists. Reception of a strong signal means that a relatively smaller mobile unit transmitter power level is required in order to produce a nominal received power at the cell-site in transmissions by the mobile unit.

In the case where there is a temporary but yet sudden degradation in the channel it is desirable that a much slower increase in mobile unit transmitter power be permitted. This slow increase in mobile unit transmitter power is desired so as to prohibit an unnecessarily rapid increase in mobile unit transmit power which increases the interference to all other mobile units. Thus a temporary degradation in one mobile unit channel will be tolerated in order to prevent a degradation of all mobile unit channels.

In the case of a sudden degradation in the channel, the non-linear filter prevents the mobile transmitter power from being increased at a high rate in response to the sudden decrease in signal power in signals received at the mobile unit. The rate of increase of the mobile unit transmitter transmit power must generally be limited to the rate of a closed loop power adjustment command transmitted from the cell-site, as described below, can reduce the mobile unit transmitter transmit power. Using the cell-site generated power adjustment commands, the mobile unit transmitter power will be prevented from being increased to a level significantly higher than the level required for communications, particularly when a sudden channel degradation occurs in only the outbound link path and not in the inbound link path.

It should be noted that it is undesirable to simply use a slow response on the mobile unit transmitter power control in an attempt to separate the fast Rayleigh fading from the slow fading due to distance and terrain. A slow response in the mobile unit transmitter power control is undesirable because the possibility of sudden improvements and fades that affect the inbound and outbound channels equally. If the response to a sudden improvement were to be slowed down by a filter, then there would be frequent occasions when the mobile unit transmitter power would be quite excessive and cause interference to all other mobile users. Thus the present invention uses a two time constant, non-linear approach in estimating the path loss.

In addition to measuring the received signal strength in the mobile unit, it is also desirable for the processor in the mobile unit to know the cell-site transmitter power and antenna gain (EIRP), the cell-site G/T (receive antenna gain G divided by receiver noise level T), the mobile unit antenna gain, and the number of calls active at this cell-site. This information allows the mobile unit processor to properly compute the reference power level for the local power setting function. This computation is done by calculating the cell-site to mobile link power budget, solving for the path loss. This path loss estimate is then used in the mobile cell-site link budget equation, solving for the mobile unit transmit power required to produce a desired signal level. This capability allows the system to have cell-sites with differing EIRP levels to correspond to the size of the cells. For example, a small radius cell need not transmit with as high a power level as a large radius cell. However, when the mobile unit is a certain distance from a low power cell, it would receive a weaker signal than from a high power cell. The mobile unit would respond with a higher transmit power than would be necessary for the short range. Hence, the desirability of having each cell-site transmit information as to its characteristics for power control.

The cell-site transmits information such as cell-site EIRP, G/T and number of active calls on a cell-site setup channel. The mobile unit receives this information when first obtaining system synchronization and continues to monitor this channel when idle for pages for calls originated within the public telephone switching network intended for the mobile unit. The mobile unit antenna gain is stored in a memory in the mobile unit at the time the mobile unit is installed in the vehicle.

As mentioned previously, mobile unit transmitter power is also controlled by a signal from the cell-site. Each cell-site receiver measures the strength of the signal, as received at the cell-site, from each mobile unit to which the cell-site is in communication with. The measured signal strength is compared to a desired signal strength level for that particular mobile unit. A power

adjustment command is generated and sent to the mobile unit in the outbound link data, or voice channel, addressed to that mobile unit. In response to the cell-site power adjustment command, the mobile unit increases or decreases the mobile unit transmitter power by a predetermined amount, nominally 1 dB.

The power adjustment command is transmitted by the cell-site transmitter at a relatively high rate, typically on the order of about one command every millisecond. The rate of transmission of the power adjustment command must be high enough to permit Rayleigh fading on the inbound link path to be tracked. It is further desirable for the outbound link path Rayleigh fading impressed on the inbound link path signal to be tracked. One command per millisecond is adequate to track the fading processes for vehicle speeds in the range of 25–50 miles per hour for 850 MHz band mobile communications. It is important that the latency in determining the power adjustment command and the transmission thereof be minimized so that channel conditions will not change significantly before the mobile unit receives and responds to the signal.

To account for the independence of the two Rayleigh fading paths, the mobile unit transmitter power is also controlled by the power adjustment command from the cell-site. Each cell-site receiver measures the received signal strength from each mobile unit. The measured signal strength is compared to the desired signal strength for that mobile unit and a power adjustment command is generated. The power adjustment command is sent to the mobile unit in the outbound data or voice channel addressed to that mobile unit. This power adjustment command is combined with the mobile unit one way estimate to obtain the final value of the mobile unit transmitter power.

The power adjustment command signal is transmitted, in an exemplary embodiment, by overwriting one or more user data bits every millisecond. The modulation system employed in CDMA systems is capable of providing error detection and correction coding for user data bits. The overwrite by the power adjustment command is treated as a channel bit error or erasure and corrected by the error correction as decoded in the mobile unit receiver. Error correction coding on the power adjustment command bits in many cases may not be desirable because of the resulting increased latency in reception and response to the power command. It is also envisioned that time division multiplexing for transmission of the power adjustment command bits may be used without overwriting user data channel symbols.

The cell-site controller or processor can be used to determine the desired signal strength, as received at the cell-site, for signals transmitted by each mobile unit. The desired signal strength level values are provided to each of the cell-site receivers. The desired signal strength value is used for comparing with a measured signal strength value for generating the power adjustment command.

A system controller is utilized to command each cell-site processor as to the value of desired signal strength to use. The nominal power level can be adjusted up or down to accommodate variations in the average conditions of the cell. For example, a cell-site positioned in an unusually noisy location or geographic region might be allowed to use a higher than normal inbound power level. However, such a higher power level for in-cell operation will result in higher levels of interference to immediate neighbors of this cell. This interference can be compensated for by allowing the neighbor cells a small increase in inbound link power. Such an increase in inbound power in neighboring cells would be smaller than that of the increase given to the mobile users communicating in the high noise environment cell. It is further understood that the cell-site processor may monitor the average bit-error-rate. This data may be used by the system controller to command the cell-site processor to set an appropriate inbound link power level to assure acceptable quality communications.

It is also desirable to provide a means for controlling the relative power used in each data signal transmitted by the cell-site in response to control information transmitted by each mobile unit. The primary reason for providing such control is to accommodate the fact that in certain locations, the outbound channel link from the cell-site to the mobile unit may be unusually disadvantaged. Unless the power being transmitted to this mobile is increased, the quality may become unacceptable. An example of such a location is a point where the path loss to one or two neighboring cells is nearly the same as the path loss to the cell-site communicating with the mobile unit. In such a location, the total interference would be increased by three times over the interference seen by the mobile unit at a point relatively close to its cell-site. In addition, the interference coming from these neighboring cell-sites will not fade in unison with the desired signal as would be the case for interference coming from the desired cell-site. This situation may required 3–4 dB additional signal power to achieve adequate performance.

In another situation, the mobile unit may be located where several strong multi-path signals arrive, resulting in larger than normal interference. In such a situation, increasing the power of the desired signal relative to the interference may allow acceptable performance. At other times, the mobile unit may be located where the signal-to-interference ratio is unusually good. In such a case, the cell-site could transmit the desired signal using a lower than normal transmitter power, reducing interference to other signals being transmitted by the system.

To achieve the above objectives, the preferred embodiment includes a signal-to-interference measurement capability within the mobile unit receiver. This measurement is performed by comparing the power of the desired signal to the total interference and noise power. If the measured ratio is less than a predetermined value the mobile transmits a request to the cell-site for additional power in cell-site transmissions. If the ratio exceeds the predetermined value, the mobile unit transmits a request for a reduction in power.

The cell-site receives the power adjustment requests from each mobile and responds by adjusting the power allocated to the corresponding cell-site transmitted signal by a predetermined amount. The adjustment would usually be small, on the order of 0.5 dB, or 12%. The rate of change of power may be somewhat slower than that used for the inbound link from the mobile unit to cell-site, perhaps once per vocoder frame, or nominally once per 15 milliseconds. The dynamic range of the adjustment would also be limited to 4 dB less than nominal to about 6 dB greater than nominal.

The cell-site must also consider the power demands being made on it by all the mobiles in deciding whether to comply with the requests of any particular mobile. For example, if the cell-site is loaded to capacity, requests for additional power might be granted but only

by 6% or less instead of the normal 12%. In this regime, a request for a reduction in power would still be granted at the normal 12% change.

BRIEF DESCRIPTION OF THE DRAWINGS

The features and advantages of the present invention will become more apparent from the detailed description set forth below when taken in conjunction with the drawings in which like reference characters correspond throughout and wherein:

FIG. 1 is a schematic overview of an exemplary mobile cellular telephone system:

FIGS. 2A-2D illustrate, in a series of graphs, mobile unit received signal strength and transmit power as a function of distance:

FIG. 3 is a block diagram of a cell-site with particular reference to the power control features of the present invention:

FIG. 4 is a block diagram of the mobile unit with particular reference to the power control features of the present invention:

FIG. 5 is a block diagram illustrating in further detail the power control features of the mobile unit of FIG. 4; and

FIG. 6 is a block diagram illustrating in further detail the power control features of the cell-site of FIG. 3.

DETAILED DESCRIPTION OF THE PREFERRED EMBODIMENTS

An exemplary terrestrial cellular mobile telephone system in which the present invention is embodied is illustrated in FIG. 1. The system illustrated in FIG. 1 utilizes CDMA modulation techniques in communications between the system mobile user, and the cell-sites. Cellular systems in large cities may have hundreds of cell-site stations serving hundreds of thousands of mobile telephones. The use of CDMA techniques readily facilitates increases in user capacity in systems of this size as compared to conventional FM modulation cellular systems.

In FIG. 1, system controller and switch 10, typically includes appropriate interface and processing hardware for providing system control information to the cell-sites. Controller 10 controls the routing of telephone calls from the public switched telephone network (PSTN) to the appropriate cell-site for transmission to the appropriate mobile unit. Controller 10 also controls the routing of calls from the mobile units via at least one cell-site to the PSTN. Controller 10 may direct calls between mobile users via the appropriate cell-site stations since such mobile units do not typically communicate directly with one another.

Controller 10 may be coupled to the cell-sites by various means such as dedicated telephone lines, optical fiber links or by radio frequency communications. In FIG. 1, two exemplary cell-sites, 12 and 14, along with two exemplary mobile units 16 and 18 which include cellular telephones are illustrated. Arrows 20*a*-20*b* and 22*a*-22*b* respectively define the possible communication links between cell-site 12 and mobile units 16 and 18. Similarly, arrows 24*a*-24*b* and arrows 26*a*-26*b* respectively define the possible communication links between cell-site 14 and mobile units 18 and 16. Cell-sites 12 and 14 normally transmit using equal power.

Mobile unit 16 measures the total received power in signals transmitted by cell-sites 12 and 14 upon path 20*a*and 26*a*. Similarly, mobile unit 18 measures the total received power in signals as transmitted by cell-sites 12 and 14 upon paths 22*a* and 24*a*. In each of mobile units 16 and 18, signals power is measured in the receiver where the signals are wide band signals. Accordingly, this power measurement is made prior to correlation of the received signals with a pseudonoise (PN) spectrum spreading signal.

When mobile unit 16 is closer to cell-site 12, the received signals power will be dominated by the signal traveling path 20*a*. When mobile unit 16 is nearer to cell-site 14, the received power will be dominated by the signals traveling on path 26*a*. Similarly, when mobile unit 18 is closer to cell-site 14, the received power will be dominated by the signals on path 24*a*. When mobile unit 18 is closer to cell-site 12, the received power will be dominated by the signals traveling on path 22*a*.

Each of mobile units 16 and 18 uses the resultant measurement, together with knowledge of the cell-site transmitter power and the mobile unit antenna gain to estimate the path loss to the closest cell-site. The estimated path loss, together with knowledge of the mobile antenna gain and the cell-site G/T is used to determine the nominal transmitter power required to obtain the desired carrier-to-noise ratio in the cell-site receiver. The knowledge by the mobile units of the cell-site parameters may be either fixed in memory or transmitted in cell-site information broadcast signals, setup channel, to indicate other than nominal conditions for a particular cell-site.

As a result of the determination of the mobile unit nominal transmit power, in the absence of Rayleigh fading and assuming perfect measurements, the mobile unit transmitted signals will arrive at the nearest cell-site precisely at the desired carrier-to-noise ratio. Thus the desired performance will be obtained with the minimum amount of mobile unit transmitter power. The minimization of the mobile unit transmitted power is important in a CDMA system because each mobile unit causes interference to every other mobile unit in the system. In minimizing the mobile unit transmitter power, system interference will be held to a minimum, thus allowing additional mobile users to share the frequency band. Accordingly, system capacity and spectral efficiency is maximized.

FIG. 2A illustrates the effect of both Rayleigh fading as a function of distance on the strength of the cell-site transmitted signal as received at a mobile unit. The average path loss, indicated by curve 30, is determined primarily by the fourth-power of the distance between the cell-site and the mobile unit, and by the shape of the terrain between them. As distance increases between the mobile unit and the cell-site, signal power decreases as received at the mobile unit for a constant power transmitted cell-site signal. The average path loss is the same for both directions of the link, and typically exhibits a log-normal distribution about the average path loss.

In addition to the slowly varying log-normal average path loss, the rapid fading up and down around the average path loss is caused by the existence of multiple path signal propagation. The signals arrive from these multiple paths in random phase and amplitude, resulting in the characteristic Rayleigh fading. Curve 32, as illustrated in FIG. 2A, represents the variation in signal path loss as a result of Rayleigh fading. The Rayleigh fading is typically independent for the two directions of the cell-site/mobile unit communication link, i.e. outbound and inbound channels. For example, when the outbound

channel is fading, the inbound channel is not necessarily fading at the same time.

FIG. 2B illustrates the mobile unit transmitter power adjusted to correspond to the link path signal strength of FIG. 2A. In FIG. 2B, curve 34 represents the desired average transmit power corresponding to the average path loss of curve 30 of FIG. 2A. Similarly, curve 36 corresponds to the mobile unit transmitter power responding to the Rayleigh fading as represented by curve 32 of FIG. 2A. As the Rayleigh faded signal, curve 32 of FIG. 2A, decreases in signal strength, rapid increases in transmitter power result. These rapid upward excursions of transmitter power can result in deleterious effects in overall system performance. Therefore, the present invention envisions the use of a non-linear filter to control rapid upward excursions, or increases, in transmitter power. Furthermore, the present invention also utilizes closed loop power adjustment feedback from the cell-site to adjust mobile unit transmitter power.

FIG. 2C illustrates the mobile unit transmitter power corresponding to FIG. 2A without taking into consideration the cell-site closed loop power adjustment feedback. In FIG. 2C the desired average transmit power, as represented by curve 34', corresponds to the mobile unit received signal strength of curve 30 of FIG. 2A. Curve 38 illustrates the transmitter power utilizing the non-linear filter in power control of the present invention. The rapid upward excursions in transmitter power, as indicated by the dashed lines of FIG. 2C and correspond to the upward excursions in curve 36 of FIG. 2B, are significantly reduced. In curve 38, the upward excursions are significantly reduced by setting the rate of increase in transmit power to a fixed value. The resulting variation in transmitter power relative to the desired transmit power is both limited in dynamic range and in rate of change. This limitation allows the closed loop power adjustment feedback process to be easier to implement and to be more effective at a much lower control data rate. Transmit power, as indicated by curve 38, is permitted to decrease at a much greater rate than an increase.

As distance increases from the points marked D_1–D_2, transmitter power decreases rather quickly corresponding to a sudden improvement in the channel. Between the distance points marked D_2–D_3 the channel degrades with a corresponding increase in transmitter power. The change in degradation is not so significant such that the non-linear filter maximum rate limits the rate of increase in transmitter power.

As distance increases as from the distance points marked D_3–D_4, the channel degrades much more rapidly than the non-linear filter will permit an increase in transmitter power. During this period, transmitter power increases at the maximum rate permitted by the non-linear filter. During the distance change indicated by marks D_4–D_5, the channel begins improving. However, as the quality of the channel improves the transmitter power continues to increase at the maximum rate until transmitter power is sufficient to meet the desired level such as at mark D_5.

It is desirable to eliminate the upward excursions in transmitter power which may cause unnecessary system interference. Should a better path to another cell-site occur, which would result in unnecessary interference in the system, quality communications in the system may be maintained by limiting the rate of increase in transmitter power.

FIG. 2D is a graph illustrating the cell-site received signal power strength with respect to transmissions of the mobile unit as it travels from the cell-site. Curve 40 indicates the desired average received signal power at the cell-site for a signal transmitted from a mobile unit. It is desirable that the average received signal power be at a constant level, yet a minimum necessary to assure a quality communication link with the mobile unit. Corrections are made at the mobile unit to correct for Rayleigh fading in the cell-site transmitted signal.

The mobile unit transmitted signal experiences Rayleigh fading before arriving at the cell-site receiver. The signal received at the cell-site is therefore a signal of constant average received power level but still with the Rayleigh fading of the inbound channel impressed thereupon. Curve 42 represents the Rayleigh fading that occurs on the inbound signal.

Additionally, there is the possibility that the mobile unit may come to rest at a place where the outbound link is not faded but yet the inbound link is severely faded. Such a condition would disrupt communications unless an additional mechanism is employed to compensate for the inbound channel Rayleigh fading. Such a mechanism is the closed loop power adjustment command process employed at the cell-site for adjusting the mobile unit transmitter power. Such a power adjustment compensates for the Rayleigh fading on the inbound channel. In FIG. 2D, curve 44 illustrates the mobile unit transmitted signal power as received at the cell-site when compensating for average path loss and Rayleigh fading on both the inbound and outbound channels. As can be seen in FIG. 2D curve 44 follows close to curve 40 except for instances of severe fading where the fading process is minimized by the closed loop control.

In FIG. 3 antenna 52 is provided for receiving multiple mobile unit transmitted signals which are then provided to analog receiver 54 for amplification, frequency downconversion and IF processing of the received RF signal. The analog signals output from receiver 54 are provided to a plurality of receiver modules for, extraction of user directed information signals, generation of power adjustment commands, and modulation of user input information signals for transmission. One such module used in communications with a particular mobile unit, such as mobile unit N, is module 50. Thus the output of receiver 54 is provided to a plurality of these modules including module 50.

Module 50 comprises digital data receiver 56, user digital baseband circuit 58, received power measurement circuitry 60 and transmit modulator 62. Digital data receiver 56 receives the wideband spread spectrum signals for correlating and despreading the mobile unit N transmitted signal to a narrow band signal for transfer to an intended recipient communicating with mobile unit N. Digital data receiver 56 provides the narrow band digital signals to user digital baseband circuitry 58. Digital data receiver 56 also provides the narrow band signal to received power measurement circuitry 60.

Received power measurement circuitry 60 measures the power level in the received signal from mobile unit N. Received power measurement circuitry 60 in response to the measured level of power generates a power adjustment command which is input to transmit modulator 62 for transmission to mobile unit N. As previously discussed, the data bits in the power adjustment command are used by mobile unit N in adjusting mobile unit transmitter power.

When the received power measurement is greater than the preset level provided by a cell-site processor (not shown), an appropriate power adjustment command is generated. Should the received power measurement be less than the preset level, the power adjustment command data bits are generated and indicate that an increase in mobile unit transmitter power is necessary. Similarly, if the received measurement is greater than the preset level, the power adjustment command is generated such that the mobile unit transmitter power is reduced. The power adjustment command is utilized to maintain a nominal received power level at the cell-site.

The signal output from digital data receiver 56 is provided to user digital baseband circuitry 58 where it is interfaced for coupling to the intended recipient via the system controller and switch. Similarly, baseband circuitry 58 receives user information signals intended for mobile unit N and provides them to transmit modulator 62.

Transmit modulator 62 spread spectrum modulates the user addressable information signals for transmission to mobile unit N. Transmit modulator 62 also receives the power adjustment command data bits from received power measurement circuitry 60. The power adjustment command data bits are also spread spectrum modulated for transmission to mobile unit N. Transmit modulator 62 provides the spread spectrum modulated signal to summer 64 where it is combined with spread spectrum signals from other module transmit modulators also located at the cell-site.

The combined spread spectrum signals are input to summer 66 where they are combined with a pilot signal provided by pilot signal generator 68. These combined signals are then provided to circuitry (not shown) for frequency upconversion from the IF frequency band to the RF frequency band and amplified. The RF signals are then provided to antenna 52 for transmission. Although not illustrated transmit power control circuitry may be disposed between summer 66 and antenna 52. This circuitry, under control of the cell-site processor, is responsive to power adjustment command signals transmitted by the mobile unit, demodulated at the cell-site receiver and provided to the cell-site control processor for coupling to the circuitry.

In FIG. 4, the mobile unit, such as mobile unit N, includes an antenna 70 for collecting cell site transmitted signals and radiating mobile unit generated CDMA signals. Mobile unit N receives the pilot signal, setup channel signals and the mobile unit N addressed signals using antenna 70, analog receiver 72 and digital data receiver 74. Receiver 72 amplifies and frequency downconverts the received RF CDMA signals to IF, and filters the IF signals. The IF signals are output to digital data receiver 74 for digital processing. Receiver 72 also includes circuitry for performing an analog measurement of the combined power of the received signals. This power measurement is used to generate a feedback signal that is provided to transmit power control circuitry 76 for controlling transmit power.

Digital data receiver 74 is used for despreading and correlating the received signals addressed to mobile unit N. Receiver 74 also separates the digital data from the power adjustment command generated by the cell site. The power adjustment command data bits are sent to control processor 78. Processor 78 generates a transmit power control command that is provided to transmit power control circuitry 80. Processor 78 also provides a level set command to transmit power control circuitry 76. Further details on the interaction of receiver 72, transmit power control 76 and 80, and processor are described in further detail with reference to FIG. 5.

Receiver 74 also provides data such as digitized encoded speech to user digital baseband circuitry 82 for decoding and interface with the user. Baseband circuitry 82 includes interface hardware for coupling receiver 74 and transmit modulator 82 to the user handset (not shown).

Data to be transmitted is provided through baseband circuitry 82 where it is encoded and provided to transmit modulator 84. The data is spread spectrum modulated by transmit modulator 84 according to an assigned spreading code. The spread spectrum signals are output from transmit modulator 84 to transmit power control circuitry 80. The signal power is adjusted in accordance with the transmit power control command provided by control processor 78. This power adjusted signal is provided from transmit power control circuitry 80 to transmit power control circuitry 76 where the signal is adjusted in accordance with the analog measurement control signal. Although illustrated as two separate units for controlling the transmit power, the power level could be adjusted by a single variable gain amplifier with two input control signals combined before being applied to the variable gain amplifier. However in the illustrated exemplary embodiment the two control functions are shown as separate elements.

In the operation of the power control circuitry illustrated in FIG. 4, receiver 72 measures the combined power level of all signals received from all cell-sites. These power level measurement results are used in controlling the power level as set by transmit power control circuitry 76. Transmit power control circuitry 76 includes circuitry in which the rate of increase transmitter power is limited by a non-linear filter as previously discussed. The rate of increase is set to be no faster than the rate at which transmit power control circuitry 80 can turn the power down in response to a series of downward commands from the cell-site and processed by receiver 74 and processor 78.

FIG. 5 illustrates in further detail the power control aspect of mobile unit N discussed with reference to FIG. 4. In FIG. 5, received RF signals from the antenna are provided to frequency downconverter 90 where the received RF signals are converted to an IF frequency. The IF frequency signals are coupled to bandpass filter 92 where out of band frequency components are removed from the signals.

The filtered signals are output from filter 92 to variable gain IF amplifier 94 where the signals are amplified. The amplified signals are output from amplifier 94 to an analog to digital (A/D) converter (not shown) for digital signal processing operations on the signals. The output of amplifier 94 is also coupled to automatic gain control (AGC) detector circuit 96.

AGC detector circuit 96 generates a gain control signal which is coupled to a gain control input of amplifier 94. This gain control signal is used to control the gain of the amplifier 94 so as to maintain a constant average power level as output from amplifier 94 to the A/D converter.

AGC detector circuit 96 also provides an output to one input of comparator 98. The other input of comparator 98 is provided with a level set signal from the mobile unit processor (not shown). This level set signal is indicative of a desired transmitter reference power level. These input signals are compared by comparator

98 with the comparison signal provided to a non-linear filter circuit 100. This comparison signal corresponds to a deviation in the received power measurement from a desired mobile unit transmitter power level.

Filter 100 may be configured as a simple resistor-diode-capacitor circuit. For example, the input to the circuit is a common node shared two resistors. The other end of each resistor is coupled to a respective diode. The diodes are reversed in their connection to the resistors and the other end of each diode coupled together as a common node as an output of the filter. A capacitor is coupled between the diode common node and ground. The filter circuit is designed to limit the rate of power increase to less than 1 dB per millisecond. The rate of power decrease is typically set to be about ten times faster than the rate of power increase, i.e. 10 dB per millisecond. The output of filter 100 is provided as a power level control signal input to the gain control input of variable gain IF amplifier 102.

AGC detector circuit 96, comparator 98 and filter 100 estimate received mobile unit signal power and the power correction necessary for the mobile unit transmitter. This correction is used to maintain a desired transmitter power level in conditions of fading on the outbound channel that are common to the inbound channel.

Transmit modulator circuit 84 of FIG. 4, provides a low power, IF frequency spread spectrum signal to an input of variable gain IF amplifier 104. Amplifier 104 is gain controlled by a power level control signal from processor 78 (FIG. 4). This power level control signal is derived from the closed loop power adjustment command signal transmitted by the cell-site and processed by the mobile unit as discussed with reference to FIG. 4.

The power adjustment command signal consists of a sequence of power-up and power-down commands that are accumulated in the mobile unit processor. The mobile unit control processor starts with the gain control level set to a nominal value. Each power-up command increases the value of a gain control command corresponding to a resultant approximate 1 dB increase in amplifier gain. Each power-down command decreases the value of the gain control command, corresponding to a resultant approximate 1 dB decrease in amplifier gain. The gain control command is converted to analog form by a digital to analog (D/A) converter (not shown) before applied to amplifier 104 as the power level control signal.

The mobile unit reference power level may be stored in the memory of the control processor. In the alternative the mobile unit reference power level may be contained within a signal sent to the mobile unit. This signal command data is separated by the digital data receiver and interpreted by the control processor in setting the level. This signal as provided from the control processor is converted by a digital to analog (D/A) converter (not shown) before input to comparator 98.

The output of amplifier 104 is provided as an input to amplifier 102. Amplifier 102 as previously mentioned is also a variable gain IF amplifier with the gain determined according to the power level control signal output from filter 100. The signal for transmission is amplified in accordance with the gain set by the power level control signal from filter 100. The amplified output signal from amplifier 102 and is further amplified and frequency translated to the RF frequency for transmission. The RF signal is then fed to the antenna for transmission.

FIG. 6 illustrates in further detail the power control scheme of the cell-site as illustrated in FIG. 3. In FIG. 6 a mobile unit transmitted signal is received at the cell-site. The received signal is processed by the cell-site analog receiver and cell-site digital data receiver corresponding to mobile unit N.

In the digital data receiver, receiver 56 of FIG. 3, the received analog signal is converted from analog to digital form by A/D converter 110. The digital signal output from A/D converter is provided to pseudorandom noise (PN) correlator 112 where the signal undergoes a correlation process with a PN signal provided from PN generator 114. The output of PN correlator 112 is provided to a fast Hadamard transform digital filter 114 where the signal is filtered. The output of filter 114 is provided to a user data decoder circuit 116 which provides user data to the user digital baseband circuitry. Decoder 116 provides the largest transform filter symbols to power average circuit 118. The power averager circuit 118 averages the largest transform outputs over a one millisecond interval using well known digital techniques.

A signal indicative of each average power level is output from power averager 118 to comparator 120. Comparator 120 also receives a power level set signal indicative of the desired received power level. This desired received power level is set by the control processor for the cell-site. Comparator 120 compares the two input signals and provides an output signal indicative of the deviation of the average power level from the desired power level. This signal is provided output to power up/down command generator 122. Generator 122 in response to the comparison generates either a power-up or a power-down command. Power command generator 122 provides the power control commands to the cell-site transmit modulator for transmission and control of the transmitter power of mobile unit N.

If the received power at the cell-site is higher than that desired of mobile unit N, then a power-down command is generated and transmitted to mobile unit N. However, if the received power level at the cell-site is too low, then a power-up command is generated and transmitted. The up/down commands are transmitted at a high rate, nominally 1,000 commands per second in the exemplary embodiment. At one bit per command, the overhead of the power command is insignificant compared to the bit rate of a high quality digital voice signal.

The power adjustment command feedback compensates for changes in the inbound channel that are independent of the outbound channel. These independent inbound channel changes are not measured in the outbound channel signal. Therefore, the path loss estimate based upon the outbound channel and the corresponding transmitter power adjustment do not reflect the changes in the inbound channel. Thus, the power adjustment command feedback is used to compensate for adjustments in mobile unit transmitter power based on the inbound channel path losses that do not exist in the inbound channel.

In using a closed loop control process it is highly desirable for the command to arrive at the mobile unit before conditions change significantly. The present invention provides a novel and unique power control circuitry at the cell-site for minimizing delay and la-

tency of measurement and transmission. The power control circuitry at the mobile unit, analog control and digital command response, provides a vastly improved power control process in the cellular mobile telephone system.

The previous description of the preferred embodiments are provided to enable any person skilled in the art to make or use the present invention. Various modifications to these embodiments will be readily apparent to those skilled in the art, and the generic principals defined herein may be applied to other embodiments without the use of the inventive faculty. Thus, the present invention is not intended to be limited to the embodiments shown herein, but is to be accorded the widest scope consistent with the principals and novel features disclosed herein.

We claim:

1. In a cellular mobile telephone system in which system users communicate information signals between one another via at least one cell-site using code division multiple access (CDMA) spread spectrum communication signals, a power control system for controlling transmission signal power for each mobile telephone in said cellular mobile telephone system, wherein each mobile telephone has an antenna, transmitter and receiver, and each cell-site has an antenna, at least one transmitter and at least one receiver, said power control system comprising:

at least one first power measurement means, each coupled to a respective mobile telephone receiver, for measuring signal power in CDMA communication signals received by said respective mobile telephone receiver;

at least one first power adjustment means, each coupled to a respective mobile telephone receiver and corresponding first power measurement means, said first power adjustment means responsive to decreases and increases in power measurements of said corresponding first power measurement means with respect to a first predetermined power level, for respectively increasing and decreasing transmission signal power of said corresponding mobile telephone transmitter;

at least one second power measurement means, each coupled to a respective cell-site receiver, for measuring signal power in each CDMA communication signal directed to said respective cell-site receiver from a corresponding mobile telephone transmitter in communication therewith;

at least one power adjustment command generator means, each coupled to a respective cell-site transmitter and corresponding second power measurement means, for generating power adjustment commands corresponding to deviations in power measurements of said corresponding second power measurement means from a second predetermined power level, said respective cell-site transmitter transmitting said power adjustment commands; and

at least one second power adjustment means, each coupled to a respective mobile telephone receiver and corresponding transmitter, said second power adjustment means responsive to said power adjustment commands directed to said respective mobile telephone receiver, for adjusting transmission signal power of said corresponding mobile telephone transmitter.

2. The power control system of claim 1 wherein said first power adjustment means provided increase in transmission signal power is at a rate less than said first power adjustment means provided decrease in transmission signal power.

3. The power control system of claim 1 wherein said first power measurement means power measurements correspond to a sum of all contemporaneously received CDMA communication signals within a predetermined frequency band, and said first power measurement means is further for generating and providing a corresponding first power measurement signal to said corresponding first power adjustment means.

4. The power control system of claim 3 wherein said first power adjustment means comprises:

comparator means for receiving said first power measurement signal and a first power level set signal, said first power level set signal corresponding to a desired mobile telephone transmitter power level, for comparing said first power measurement signal with said first power level set signal, and for providing a corresponding comparator output signal; and

variable gain amplification means operatively coupled to said mobile telephone transmitter for receiving said comparator output signal and responsive thereto for varying transmission signal power of said corresponding mobile telephone transmitter.

5. The power control system of claim 4 further comprising filter means disposed between said comparator means and said variable gain amplification means for receiving said comparator output signal, for unequally limiting a rate of change in increases and decreases in said received comparator output signal and for providing a corresponding limited comparator output signal to said variable gain amplification means.

6. An apparatus for controlling transmission signal power in a cellular mobile telephone in communications with at least one cell-site station using code division multiple access (CDMA) spread spectrum communication signals, said cellular mobile telephone having an antenna coupled to a transmitter and a receiver, said transmitter for generating and transmitting a CDMA carrier signal according to an assigned spreading function modulated by a mobile user input information signal, said receiver for receiving CDMA communication signals and spectrum processing said received CDMA communication signals according to an assigned spreading function so as to recover a mobile user output information signal intended for a user of said cellular mobile telephone, said cell-site station communicating power control commands in CDMA communication signals intended for said cellular mobile telephone with said receiver providing an output of said power control commands, said apparatus comprising:

measurement means for, operatively coupled to said receiver, measuring combined signal power in contemporaneously received CDMA communication signals and providing a measurement signal indicative of measured signal power;

adjustment means for, operatively coupling to said transmitter, receiving said measurement signal, varying transmitter signal power in opposite correspondence to variations in measured signal power about a predetermined power level; and

additional adjustment means for, operatively coupled to said receiver and transmitter, receiving said

power adjustment commands, and varying transmitter signal power in correspondence thereto.

7. The apparatus of claim 6 wherein said adjustment means is responsive to said measurement signal for, increasing transmitter signal power in response to decreases in measured signal power with respect to said predetermined power level, and decreasing transmitter signal power in response to increases in measured signal power with respect to said predetermined power level.

8. The apparatus of claim 7 wherein said adjustment means provided increase in transmitter signal power is at a rate less than said adjustment means provided decrease in transmitter signal power.

9. The apparatus of claim 6 wherein said cell-site station measures signal power of said cellular mobile telephone transmitted CDMA communication signals and generates for transmission said power adjustment commands indicative of one of an increase and a decrease in said cellular mobile telephone signal power so as to maintain a predetermined power level for cell-site station received CDMA communication signals from said cellular mobile telephone.

10. The apparatus of claim 6 wherein said adjustment means comprises:

comparator means for receiving measurement signal and a first power level set signal, said first power level set signal corresponding to a desired cellular mobile telephone transmitter power level, for comparing said first power measurement signal with said first power level set signal, and for providing a corresponding comparator output signal;

filter means for, receiving said comparator output signal, limiting a rate of change in variations in said comparator output signal, and providing an output of a corresponding limited comparator output signal; and

variable gain amplification means, operatively coupled to said transmitter, for receiving said limited comparator output signal and responsive thereto for varying signal power of said transmitter.

11. The apparatus of claim 10 wherein said additional adjustment means comprises:

processor means for, receiving said power adjustment commands, accumulating said power adjustment commands with a predetermined gain control level setting, and providing a corresponding power adjustment signal; and

additional variable gain amplification means, operatively coupled to said transmitter, for receiving said power adjustment signal and responsive thereto for varying signal power of said transmitter.

12. In a cellular mobile telephone system in which system users communicate information signals between one another via at least one cell-site using code division multiple access (CDMA) spread spectrum communication signals, a method for controlling transmission signal power for each mobile telephone in said cellular mobile telephone system, wherein each mobile telephone has an antenna, transmitter and receiver, and each cell-site has an antenna, at least one transmitter and at least one receiver, said method comprising the steps of:

measuring signal power in CDMA communication signals received by each respective mobile telephone receiver;

varying transmission signal power of each corresponding mobile telephone transmitter in inverse proportion to variations in corresponding mobile telephone power measurements with respect to a first predetermined power level;

measuring signal power in each CDMA communication signal received at each respective cell-site receiver as transmitted from a corresponding mobile telephone transmitter in communication therewith;

generating power adjustment commands corresponding to deviations in corresponding cell-site power measurements from a second predetermined power level;

transmitting said power adjustment commands along with said information signals rom each respective cell-site to a corresponding mobile telephone in communication therewith;

receiving at each respective mobile telephone receiver said power adjustment commands corresponding thereto; and

adjusting transmission signal power of each corresponding mobile telephone transmitter in correspondence to said power adjustment commands directed to said respective mobile telephone receiver.

13. The method of claim 12 wherein said step of varying transmission signal power of each corresponding mobile telephone transmitter in inverse proportion to variations in corresponding mobile telephone power measurements with respect to a first predetermined power level further comprises the step of:

limiting a rate of increase in transmission signal power of each corresponding mobile telephone transmitter less than a rate of decrease in transmission signal power of each corresponding mobile telephone transmitter.

14. The method of claim 12 wherein said step of varying transmission signal power of each corresponding mobile telephone transmitter in inverse proportion to variations in corresponding mobile telephone power measurements with respect to a first predetermined power level comprises the steps of:

providing an increase in transmission signal power of each corresponding mobile telephone transmitter in responsive to decrease in a corresponding mobile telephone power measurement with respect to said first predetermined power level; and

providing an decrease in transmission signal power of each corresponding mobile telephone transmitter in response to an increase in a corresponding mobile telephone power measurement with respect to said first predetermined power level.

15. The method of claim 14 wherein said step of generating power adjustment commands corresponding to deviations in corresponding cell-site power measurements from a second predetermined power level comprises the steps of:

generating a power-up command in response to a decrease in a corresponding cell-site power measurement from said second predetermined power level; and

generating a power-down command in response to an increase in a corresponding cell-site power measurement from said second predetermined power level.

16. The method of claim 15 wherein said step of adjusting transmission signal power of each corresponding mobile telephone transmitter in correspondence to said

power commands directed to said respective mobile telephone receiver comprises the steps of:

increasing mobile telephone transmitter signal in response to each power-up command; and

decreasing mobile telephone transmitter signal in response to each power-down command.

17. The method of claim 12 wherein said step of generating power adjustment commands corresponding to deviations in corresponding cell-site power measurements from a second predetermined power level comprises the steps of:

generating a power-up command in response to a decrease in a corresponding cell-site power measurement from said second predetermined power level; and

generating a power-down command in response to an increase in a corresponding cell-site power measurement from said second predetermined power level.

18. The method of claim 17 wherein said step of adjusting transmission signal power of each corresponding mobile telephone transmitter in correspondence to said power adjustment commands directed to said respective mobile telephone receiver comprises the steps of:

increasing mobile telephone transmitter signal in response to each power-down command; and

decreasing mobile telephone transmitter signal in response to each power-down command.

19. The method of claim 12 wherein in said step of measuring signal power in CDMA communication signals received by each respective mobile telephone receiver, measured signal power corresponds to a sum of all contemporaneously received CDMA communication signals within a predetermined frequency band.

20. The method of claim 12 further comprising the step of generating a first power measurement signal corresponding to said measured signal power in CDMA communication signals received by each respective mobile telephone receiver.

21. The method of claim 20 wherein said step of varying transmission signal power of each corresponding mobile telephone transmitter in inverse proportion to variations in corresponding mobile telephone power measurements with respect to a first predetermined power level comprises the steps of:

comparing said first power measurement signal with a first power level set signal, said first power level set signal corresponding to a desired mobile telephone transmitter power level;

providing a comparator output signal corresponding to a difference between said first power measurement signal and said first power level set signal; and

varying mobile telephone transmitter gain according to said comparator output signal.

22. A method for controlling transmission signal power in a cellular mobile telephone in communications with at least one cell-site station using code division multiple access (CDMA) spread spectrum communication signals, said cellular mobile telephone having an antenna coupled to a transmitter and a receiver, said transmitter for generating and transmitting a CDMA carrier signal according to an assigned spreading function modulated by a mobile user input information signal, said receiver for receiving CDMA communication signals and spectrum processing said received CDMA communication signals according to an assigned spreading function so as to recover a mobile user output information signal intended for a user of said cellular mobile telephone, said cell-site station communicating power control commands in CDMA communication signals intended for said cellular mobile telephone with said receiver processing said received power control commands and providing an output of said power control commands, said method comprising the steps of:

measuring combined signal power in contemporaneously received CDMA communication signals;

varying transmitter signal power in inverse proportion to variations in measured signal power about a predetermined power level; and

varying transmitter signal power in correspondence to received power adjustment commands.

23. The method of claim 22 wherein said step of varying transmitter signal power in inverse proportion to variations in measured signal power about a predetermined power level comprises the steps of:

increasing transmitter signal power in response to decreases in measured signal power with respect to said predetermined power level; and

decreasing transmitter signal power in response to increases in measured signal power with respect to said predetermined power level.

24. The method of claim 23 wherein increases in transmitter signal power are at a rate less than decreases in transmitter signal power.

25. The method of claim 22 wherein said cell-site station measures signal power of said cellular mobile telephone transmitted CDMA communication signals and generates for transmission said power adjustment commands indicative of one of an increase and a decrease in said cellular mobile telephone signal power so as to maintain a predetermined power level for cell-site station received CDMA communication signals from said cellular mobile telephone.

26. The method of claim 22 wherein said step of measuring combined signal power in contemporaneously received CDMA communication signals further comprises the step of generating a measurement signal indicative of measured signal power, and wherein said step of varying transmitter signal power in inverse proportion to variations in measured signal power about a predetermined power level comprises the steps of:

generating a first power level set signal corresponding to a desired cellular mobile telephone transmitter power level;

comparing said first power measurement signal with said first power level set signal;

providing a comparator output signal corresponding to a difference between said desired cellular mobile telephone transmitter power level and said measured signal power;

limiting a rate of change in variations in said comparator output signal;

providing a corresponding limited comparator output signal; and

varying signal power of said transmitter in response to said limited comparator output signal.

27. The method of claim 26 wherein said step of varying transmitter signal power in correspondence to received power adjustment commands comprises the steps of:

accumulating said processed power adjustment commands with a predetermined gain control level setting;

providing a power adjustment signal corresponding to said accumulation of said processed power adjustment commands with said predetermined gain control level setting; and

varying signal power of said transmitter in response to said power adjustment signal.

• • • • •

US005099204A

United States Patent [19]

Wheatley, III

[11] Patent Number: 5,099,204

[45] Date of Patent: Mar. 24, 1992

[54] LINEAR GAIN CONTROL AMPLIFIER

[75] Inventor: Charles E. Wheatley, III, Del Mar, Calif.

[73] Assignee: Qualcomm Incorporated, San Diego, Calif.

[21] Appl. No.: 598,845

[22] Filed: Oct. 15, 1990

[51] Int. Cl.[5] H03G 3/30

[52] U.S. Cl. 330/279; 330/306; 330/310

[58] Field of Search 330/277, 278, 279, 285, 330/302, 305, 306, 310; 455/219, 234, 240, 241

[56] References Cited

U.S. PATENT DOCUMENTS

3,325,738 6/1987 Busby et al. ..... 455/219 X
4,500,848 2/1985 Marchand et al. 330/285
4,740,996 4/1988 Somer ..... 455/253 X

Primary Examiner—Steven Mottola

Attorney, Agent, or Firm—Russell B. Miller

[57] ABSTRACT

An amplification circuit having a compensation circuit for receiving a control signal and generating a corresponding compensation signal according to predetermined compensation characteristics. An input amplification circuit is provided for, receiving an input signal and the compensation signal amplifying the input signal at an input gain level determined by the compensation signal and providing a corresponding input amplification circuit output signal. A filter element receives and filters unwanted frequency components from the input amplification circuit output signal. An output amplification circuit is provided for, receiving the filtered input amplification circuit output signal and the compensation signal, amplifying the filtered input amplification circuit output signal at an output gain level determined by the compensation signal and providing a corresponding output amplification circuit output signal.

19 Claims, 2 Drawing Sheets

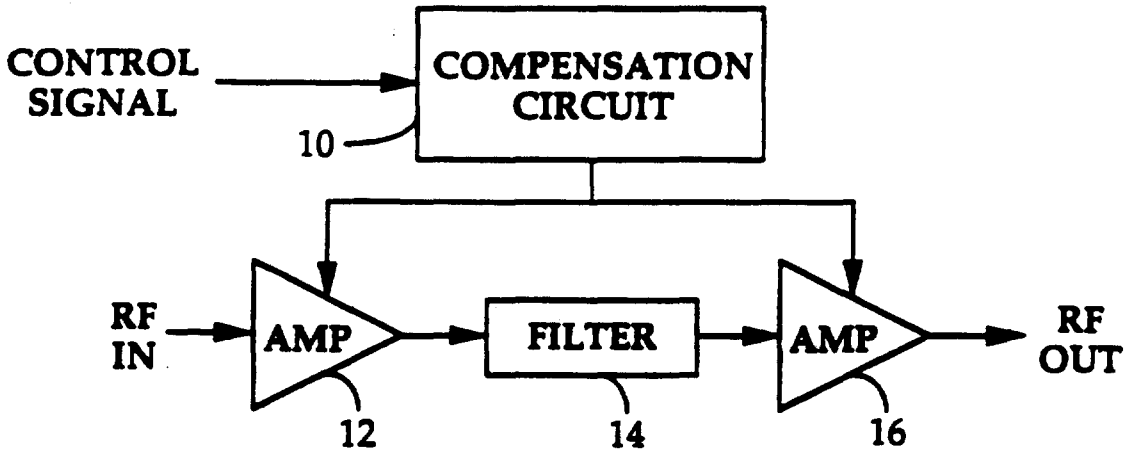

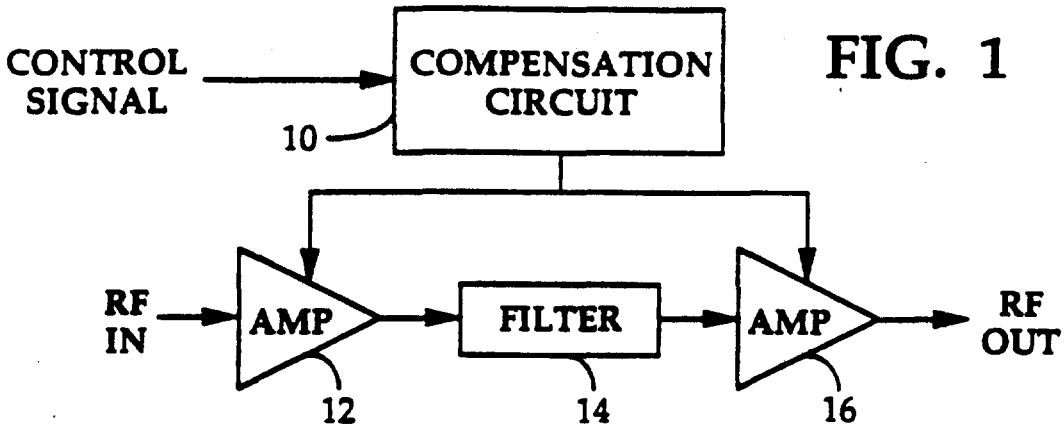

FIG. 1

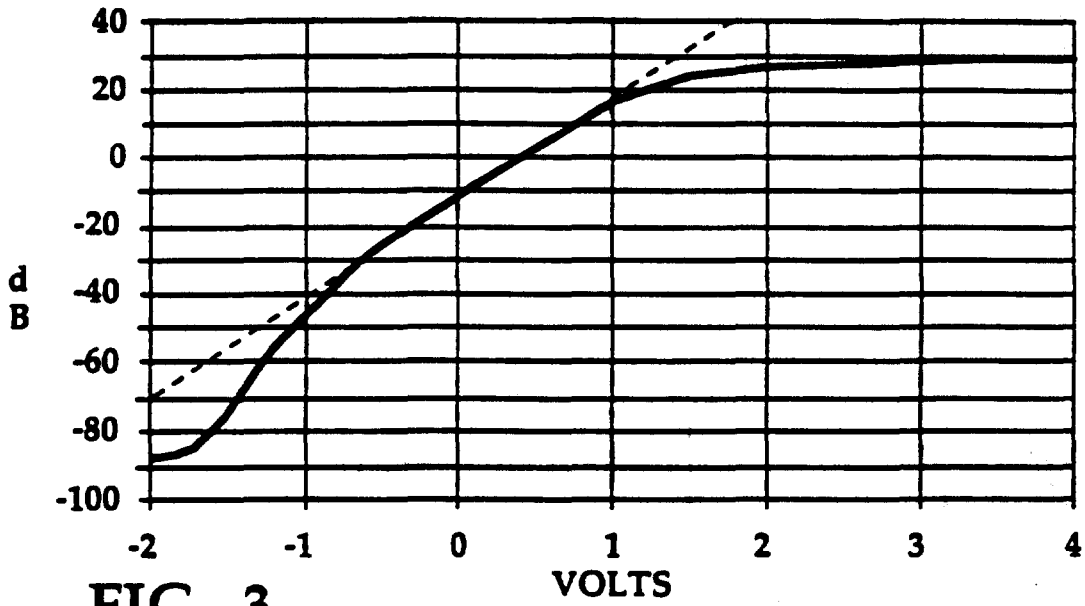

FIG. 3

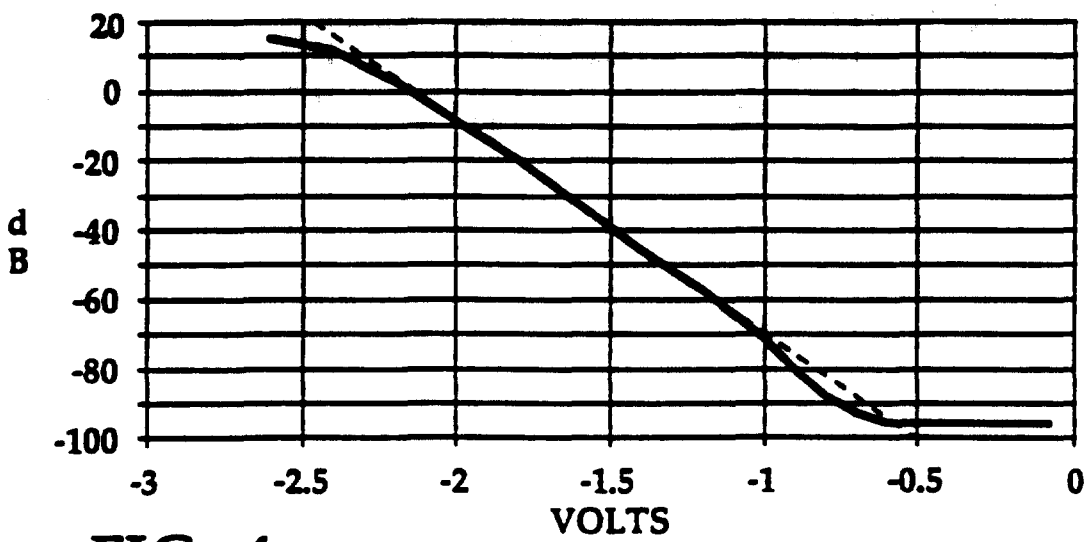

FIG. 4

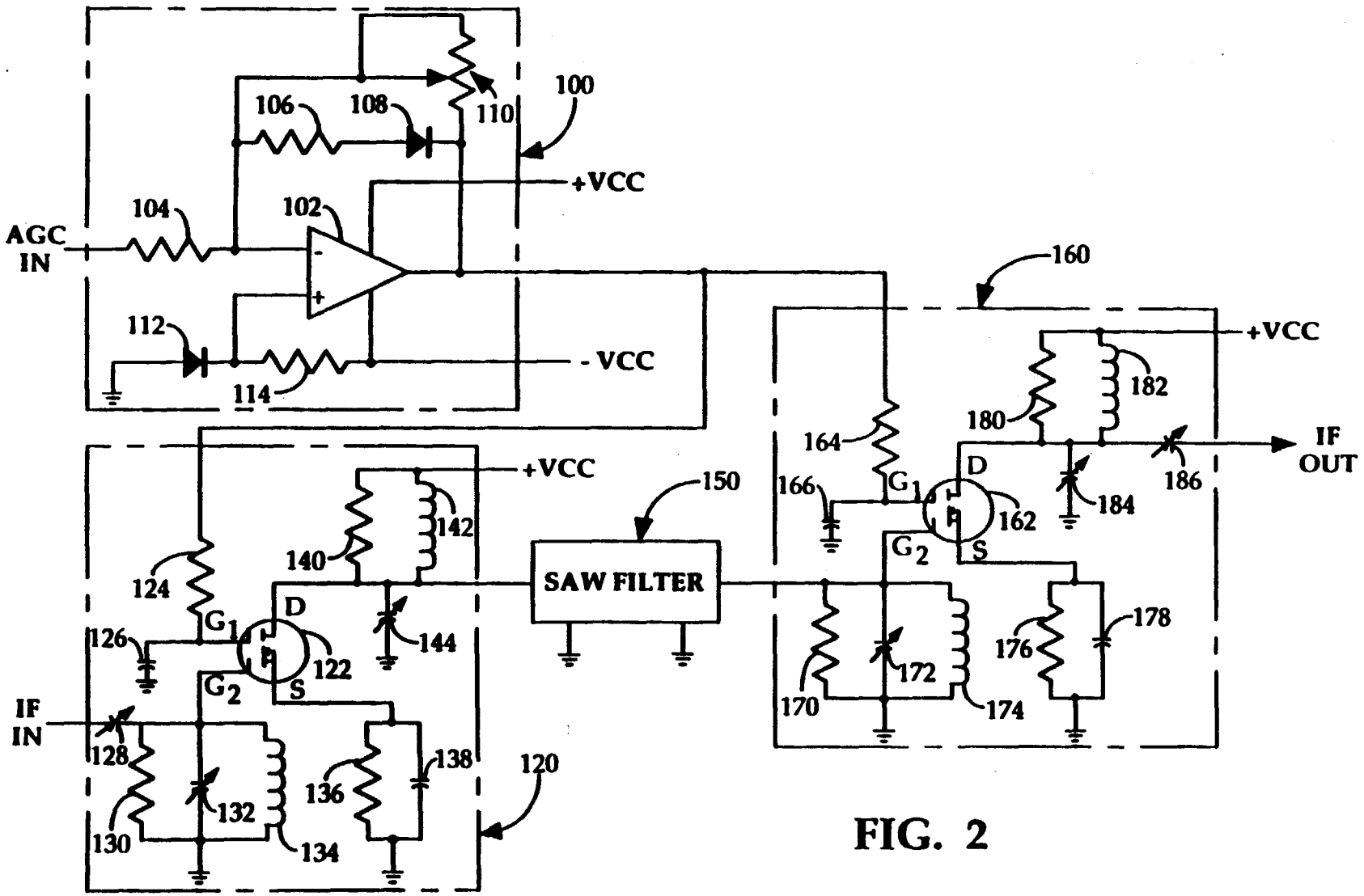
100
106
108
110
+VCC
104
102
AGC IN
112
114
- VCC
160
+VCC
182
180
164
IF OUT
166
G1
D
162
184
186
G2
S
+VCC
150
142
140
SAW FILTER
124
G1
D
144
126
122
G2
S
IF IN
128
132
136
138
120
130
134
178
176
172
170
174

FIG. 2

LINEAR GAIN CONTROL AMPLIFIER

BACKGROUND OF THE INVENTION

I. Field of the

The present invention relates to amplifiers. More particularly, the present invention relates to a novel and improved radio frequency amplifier circuit which provides linear control of gain, when such gain is measured in decibels, over a large gain range.

II. Description of the Related Art

The use of automatic gain control (AGC) circuits to control amplifier gain in communication terminals has been accomplished by many various designs. Typically the range in gain for such amplifiers is somewhat limited, and therefore are not directly useful in applications where a very large dynamic range of signals are to be accommodated.

In applications where a surface acoustic wave (SAW) filter is utilized in the receiver for band filtering, special care must be taken in choosing the impedance of the circuit seen by the SAW filter. Traditionally the SAW filter is matched in impedance with the external circuit by using simple series coupled inductors at the input and output of the SAW filter. Such simple impedance matching provides for a reduction of the well known phenomena of triple transit interference (reflections of the signal of interest within the SAW filter). However, such a reduction in triple transit is at the expense of increased insertion losses.

A typical insertion loss using a conventionally configured SAW filter is approximately 20 dB. The minimum insertion loss that a simple SAW filter is theoretically capable of producing is 6 dB. However, at the minimum insertion loss the triple transit signal is at a level that can substantially interfere with a signal of interest.

In applications requiring a large gain control, and which also utilizes SAW filters for band filtering, the loss of the SAW filter should be minimized if one is to maximize the effective range of controllable gain.

In certain applications, such as in CDMA cellular telephone transceivers where transmitter power control and receiver AGC are essential to system operation, the transmitter and receiver must both operate over a relatively high dynamic range and track each others gain change over the full range of control. In such an environment, the receiver can be required to operate over a gain range that can easily reach as high as 80 dB.

In many systems, again such as in CDMA cellular telephone transceivers, it is essential that in response to a received signal, the AGC loop should provide a signal indicative of measured signal strength which is linear, in terms of output indication as a function of dB of input. Conventional AGC circuits normally exhibit such a characteristic over only a portion of the full control range, due to nonlinearities in the gain control function of the amplifier.

It is therefore an object of the present invention to provide a novel and improved amplification circuit which, in response to a gain control signal, is capable of substantially linear gain control operation over a relatively large range.

It is another object of the present invention to provide an amplifier circuit in which gain in dB is controlled as a linear function of an input control signal.

It is yet another object of the present invention to provide active impedance matching of a SAW filter to minimize insertion loss at specified levels of triple transit signals.

It is still a further object of the present invention to provide a temperature compensated amplification circuit capable of substantially linear gain control over a large dynamic range over a wide temperature range.

SUMMARY OF THE INVENTION

The present invention is a novel and improved automatic gain control circuit controlled linear amplifier capable of linear operation over a relatively large range of gains. The amplifier of the present invention involves the utilization of two low-cost amplifiers, typically dual gate FET amplifiers, appropriately mismatched to a filter, specifically a SAW bandpass filter as a signal amplification circuit. The amplifier of the present invention further involves the utilization of a low frequency amplifier, typically an operational amplifier (op-amp), with diode feedback to provide linear gain control and temperature compensation for the signal amplification circuit over a gain operational range of over 110 dB.

In accordance with the present invention an amplifier circuit is disclosed which is capable of providing linear gain control over a high dynamic range. The circuit comprises in an exemplary embodiment a compensation circuit, a first amplifier, a filter and a second amplifier.

The compensation circuit receives a linear control signal corresponding to a log power measurement of a received signal. The compensation circuit is responsive to the control signal for generating, a corresponding nonlinear control signal, or compensation signal, according to predetermined compensation characteristics. The first amplifier is coupled to the compensation circuit for receiving the compensation signal and for receiving an input RF signal. The first amplifier amplifies the input RF signal at an input gain level determined by the compensation signal so as to provide a corresponding first amplifier output signal.

The filter is coupled to the first amplifier so as to receive the first amplifier output signal. The filter removes unwanted frequency components from the first amplifier output signal and provides a filtered first amplifier output RF signal.

The second amplifier is also coupled to the compensation circuit for receiving the compensation signal and to the filter for receiving the filtered first amplifier output signal. The second amplifier amplifies the filtered first amplifier output signal at an output gain level determined by the compensation signal so as to provide a corresponding second amplifier output RF signal.

The filter has an input and output impedance that is mismatched by the first and second amplifiers to provide a reduction in insertion loss at a predetermined triple transit level. The compensation circuit compensates for inherent device nonlinearities in gain, for a linear control signal, of the first and second amplifiers over the large dynamic range of operation required. The compensation circuit also provides for temperature compensation of the first and second amplifiers so as to reduce the adverse affects of changes in temperature on gain.

BRIEF DESCRIPTION OF THE DRAWINGS

The features, objects, and advantages of the present invention will become more apparent from the detailed description set forth below when taken in conjunction with the drawings in which like reference characters identify correspondingly throughout and wherein:

FIG. 1 is a block diagram of an exemplary embodiment of the linearized automatic gain control amplifier of the present invention:

FIG. 2 is an exemplary schematical circuit diagram of the linearized automatic gain control amplifier of FIG. 1:

FIG. 3 is a graph illustrating the inherent gain characteristic of the uncompensated amplifier circuit used in the embodiment of FIG. 2; and

FIG. 4 is a graph illustrating the linearized gain characteristic of the compensated amplifier circuit used in the embodiment of FIG. 2.

DETAILED DESCRIPTION OF THE PREFERRED EMBODIMENTS

Referring to the drawings, FIG. 1 illustrates in block diagram form an exemplary embodiment of the linear amplification circuit of the present invention. The typical environment in which the circuit of FIG. 1 is implemented is in an automatic gain control (AGC) circuit.

The use of AGC circuits are well known in the communications art for receivers or transceivers operating in the RF frequency band. AGC circuits are typically used for, based upon the strength of the received signal, controlling the power of a received signal for later processing of the signal and also for controlling transmitter power. In the AGC circuit, a measurement of signal strength, or power, of the received signal is performed at some other point where an AGC signal is generated. The AGC signal is typically provided as a gain control signal to a variable gain amplifier. The amplifier in response to the AGC signal adjusts the amount of gain applied to the received signal. The amplifier gain may be negative or positive depending upon system parameters and signal strength.

The amplification circuit of FIG. 1 is comprised of compensation circuit 10, variable gain amplifier circuit 12, filter 14 and variable gain amplifier circuit 16. In FIG. 1, a gain control signal is provided to compensation circuit 10. In an AGC application, such a control signal is generated by a signal strength measurement circuit (not shown) in linear correspondence with the log of the measured signal strength of the received RF signal, or corresponding IF signal if frequency downconverted before measurement.

The control signal is provided as an input to compensation circuit 10 where the control signal is modified according to predetermined compensation characteristics. Compensation circuit 10 provides compensation in the control signal for inherent nonlinearities in the amplification circuitry used to amplify the input RF signal, corresponding to the received RF signal. Compensation circuit 10 thus generates a compensated control signal which is output therefrom as a nonlinear control signal or compensation signal. It should be understood that the compensation signal is typically linear with respect to the control signal, except for those portions of the gain curve for the amplifier circuits where nonlinearities occur in response to a linear control signal.

In a CDMA mobile telephone, the amplification circuitry is required to operate over a high dynamic range, such as in excess of 80 dB. The amplification circuitry employed in this application must be low in cost for maximum commercial exploitation. Such a low cost design employs amplifier components which can experience nonlinearities in gain when conventional techniques are used in gain control over a large operational gain range. For proper operation of the mobile telephone at such a large operational gain range, compensation must be provided. Accurate gain control is particularly critical if pairs of gain controlled elements are to be used. In such an application, gain controlled amplifiers are used in both the receiver and transmitter and must track each other with respect to gain variation or adjustment.

In the exemplary embodiment, a cascaded amplifier scheme is used to provide variable gain control in amplification of the received signal. Disposed between the cascaded amplifiers is a filter which removes out of band frequency components from the RF signal. The dual amplifiers also serve to provide active impedance matching of the filter.

As illustrated in FIG. 1, amplifier circuits 12 and 14 both receive, at a respective gain control input, the compensation signal from compensation circuit 10. Amplifier circuit 12 receives the RF signal at an input and amplifies the signal at a gain level as determined by the compensation signal. The amplified signal is output from an output of amplifier circuit 12 signal as a input to filter 14.

Filter 14 is typically a bandpass filter, although other filter types may be used depending on the frequency plan. In the mobile telephone application, filter 14 may be implemented as a SAW filter. Filter 14 removes unwanted frequency components from the RF signal. Filter 14 provides the filtered signal at an output thereof to an input of amplifier circuit 16. Amplifier circuit 16 receives the filtered RF signal at an input and amplifies the signal at a gain level as determined by the compensation signal.

Filter 14 implemented as a SAW filter has an inherent input and output impedance that must be properly mismatched to provide a minimum insertion loss at a level of tolerable triple transit. Typically SAW filters employ a passive component, such as an inductor, at the input and output to provide the proper impedance matching to translate the filter impedance to a value appropriate for coupling to 50Ω circuit elements. However, such impedance matching techniques result in insertion losses much greater than the theoretical minimum 6 dB, and typically on the order of 20-25 dB to avoid problems caused by the triple transit effect. In using a cascaded amplifier arrangement, amplifier circuits 12 and 16 provide "active" impedance matching which enables maximum reduction of insertion loss to a level which has a tolerable triple transit effect. Insertion losses can thus be readily achieved in the more optimum range of 14-15 dB.

FIG. 2 illustrates in further detail an exemplary embodiment of the amplification circuit of FIG. 1. Compensation circuit 100 receives an AGC signal and in response thereto generates the appropriate compensation. The resulting compensation signal is output from compensation circuit 100 to both amplifier circuits 120 and 160.

Amplifier circuit 120 receives and amplifies an input IF signal at a gain level determined by the compensation signal. The amplified IF signal is then output to filter 150 where it is bandpass filtered and output to amplifier circuit 160. Amplifier circuit 160 receives the amplified and filtered IF signal where amplified at a gain level determined by the compensation signal. The amplified IF signal is then output from amplifier circuit 160 for further processing.

Compensation circuit 100 is comprised of an operational amplifier, op amp 102, which has an inverting

input coupled to receive the AGC signal through input resistor 104. The inverting input is also coupled to the output of op amp 102 through a nonlinear feedback circuit comprised of series coupled resistor 106 and diode 108 which are coupled in parallel with variable resistor 110. The noninverting input of op amp 102 is provided with a reference or bias voltage across diode 112 that is provided through resistor 114 from the supply voltage −VCC. Resistors 104, 106 and 114 are typically of the same resistance, e.g., 10 KΩ value, while variable resistor 110 is capable or providing a much larger resistance value, e.g. 50 KΩ.

In the operation of compensation circuit 100, when the AGC voltage is above the bias voltage appearing at the noninverting input of op amp 102, the parallel resistance combination of resistor 106 and variable resistor 110, along with input resistor 104 (R106||R110/R104) set a first slope gain curve for operation of op amp 102. When the AGC voltage is below the bias voltage, the value of variable resistor 110 along with input resistor 104 (R110/R104) set a second, and different, gain curve for operation of op amp 102. Furthermore diodes 108 and 114 are preferably of the same type such that changes in temperature affecting diode 108, and thus the feedback, similarly affect diode 114 and the bias voltage. In the alternative, diode 114 may be replaced by a temperature sensitive element such as a thermistor. It should be understood that the bias voltage appearing at the noninverting input of op amp 102 may be established at many different levels and by many different ways that are well known in the art.

The compensation signal generated by compensation circuit 100 is output from op amp 102 to both of amplifier circuits 120 and 160. Amplifier circuit 120 is typically comprised of dual gate FET amplifier 122 which has one gate (G_1) coupled through resistor 124 to the output of op amp 102 and through capacitor 126 to ground. The other gate (G_2) of FET 122 receives the input IF signal through variable capacitor 128, and is coupled to ground through the parallel combination of resistor 130, variable capacitor 132 and inductor 134. The source (S) of FET 122 is also coupled to ground through the parallel combination of resistor 136 and capacitor 138. The drain (D) of FET 122 is coupled to the supply voltage +VCC through the parallel combination of resistor 140 and inductor 142 while also being coupled to ground through variable capacitor 144. The drain (D) of FET 122 is coupled to the input of SAW filter 150.

The voltage at gate (G_1) as determined by the output of op amp 102 controls the level of gain of FET 122. The input IF signal is amplified at the determined gain level by FET 122 with the output voltage appearing across the input transducer (not shown) of SAW filter 150. The parallel combination of resistor 140 and inductor 142 are of values selected such that, in combination with the output impedance of FET 122 appearing at the drain (D), the impedance of this circuit supplies the source impedance seen by SAW filter 150.

It may be shown by using simple, tuned matching networks, the total insertion loss (IL) of the complete SAW filter is approximately:

$$IL = \left| \frac{2G_aG_s}{(G_a + G_s)^2} \right|^2 \quad (1)$$

where:

Ga is the real part of the acoustic admittance: and

Gs is the real part of the source and load admittances.

Also, it may be shown that the triple transit response (TTR) of the complete filter is defined by:

$$TTR = \left| \frac{2G_aG_s}{(G_a + G_s)^2} \right|^2 \cdot \left| \frac{G_a^2}{(G_a + G_s)^2} \right|^2 \quad (2)$$

Using the relationships set forth by equations (1) and (2), one can compute that for a triple transit response of 30 dB, relative to the main signal, an insertion loss of 12 dB can be achieved.

Amplifier circuit 160 is constructed in a manner similar to that of amplifier circuit 120. Amplifier circuit 160 is is comprised of dual gate FET amplifier 162, preferably the same as FET 122, which has one gate (G_1) coupled through resistor 164 to the output of op amp 102 and through capacitor 166 to ground. The other gate (G_2) of FET 162 is coupled to the output of SAW filter 150 for receiving the filtered and amplified IF signal the output therefrom, and is coupled to ground through the parallel combination of resistor 170, variable capacitor 172 and inductor 174. The source (S) of FET 162 is also coupled to ground through the parallel combination of resistor 176 and capacitor 178. The drain (D) of FET 162 is coupled to the supply voltage +VCC through the parallel combination of resistor 180 and inductor 182 while also being coupled to ground through variable capacitor 184. The output of FET 162 is provided through variable capacitor 186 also coupled to the drain (D) of FET 162.

The voltage at gate (G_1), as determined by the output of op amp 102, again controls the level of gain of FET 162. The IF signal output from SAW filter 150 is amplified at the determined gain level by FET 162 with the output voltage appearing at the output of variable capacitor 186. The parallel combination of resistor 170 and inductor 172 are of values selected such that, in combination with the input impedance of FET 162 appearing at the gate (G_2), the impedance of this circuit provides the proper load for the output impedance of SAW filter 150.

In should be noted that the output impedance of a FET is typically greater than the input impedance. In amplifier circuit 120, resistor 140 is used to set the output impedance of the circuit to match the input of SAW filter 150. In amplifier circuit 160, resistor 170 is used to set the input impedance of the circuit to match the output impedance of SAW filter 150. The value of resistor 170 is lower in value than resistor 140 since the input impedance of the FET is greater than its output impedance. This mismatch in amplifier selected resistor values provides compensation for the difference in FET input and output impedance for impedance matching to any circuit element. In the embodiment shown herein, the resistors largely set the impedances with variations in FET impedances are not critical. It is further envisioned that more gain could be realized using transformer matching techniques.

FIG. 3 illustrates in graphical form the gain characteristics of the amplifier circuit without compensation of the AGC signal. The solid line and the dashed line respectively represent the actual gain characteristic curve and the desired gain characteristic curve. The circuit has straight line control of gain in dB for gain

values from about −40 dB to about 20 dB. The uncompensated amplifier circuit thus provides an operational region of 60 dB, where gain in dB is a linear function of the input voltage applied to the gain control input of the amplifiers. In the region below −40 dB, the actual gain departs quite radically from the desired straight line desired gain curve. It is this region below −40 dB which the present invention predominantly seeks to provide an improved correlation to the desired gain characteristic curve.

FIG. 4 illustrates in graphical form the gain characteristics of the amplifier circuit with compensation of the AGC signal. The solid line and the dashed line again respectively represent the actual gain characteristic curve and the desired linear gain characteristic curve. The circuit has straight line control of gain in dB for gain values from about −75 dB to about 10 dB. The compensated amplifier circuit thus provides an operational region of operation of about 85 dB, where gain in dB is a linear function of the input voltage applied to the gain control input of the amplifiers. In the region below −75 dB, the actual gain is markedly closer to the desired straight line gain curve than for the uncompensated circuit. It is therefore readily be seen that by providing a compensated AGC signal in the amplifier circuit of the present invention that an extended range of gain control in dB, which is a linear function of the input AGC signal, is possible.

The previous description of the preferred embodiments is provided to enable any person skilled in the art to make or use the present invention. The various modifications to these embodiments will be readily apparent to those skilled in the art, and the generic principles defined herein may be applied to other embodiments without the use of the inventive faculty. Thus, the present invention is not intended to be limited to the embodiments shown herein but is to be accorded the widest scope consistent with the principles and novel features disclosed herein.

I claim:

1. An amplification circuit for amplifying an input signal where signal gain in decibels (dB) is a linear function of a control signal comprising:

compensation means for receiving a control signal and generating a corresponding compensation signal according to predetermined gain compensation characteristics;

input amplification means for, receiving an input signal and said compensation signal, amplifying said input signal at an input gain level determined by said compensation signal and providing a corresponding input amplification means output signal, said input amplification means gain in dB being a linear function of said control signal over a predetermined gain range;

filter means for receiving and filtering said input amplification means output signal; and

output amplification means for, receiving said filtered input amplification means output signal and said compensation signal, amplifying said filtered input amplification means output signal at an output gain level determined by said compensation signal and providing a corresponding output amplification means output signal, said output amplification means gain in dB being a linear function of said control signal over said predetermined gain range.

2. The amplification circuit of claim 1 wherein:

said filter means has a predetermined input and output impedance;

said input amplification means is further for providing a selected output impedance so as to match said filter means input impedance; and

said output amplification means is further for providing a selected input impedance so as to match said filter means output impedance.

3. The amplification circuit of claim 1 wherein said filter means comprises a surface acoustic wave (SAW) filter.

4. The amplification circuit of claim 3 wherein said input and output amplification means each comprises a FET amplifier.

5. The amplification circuit of claim 4 wherein:

said filter has a predetermined input and output impedance;

said input amplification means FET amplifier has a predetermined output impedance matched to said filter input impedance; and

said output amplification means FET amplifier has a predetermined input impedance matched to said filter output impedance.

6. An amplifier circuit, for use with an automatic gain control (AGC) circuit which generates an AGC signal, for in response to said AGC signal providing gain control of an input signal over a high dynamic range, said gain control being a linear function of said AGC control signal comprising:

a compensation circuit having an input and an output, said compensation circuit capable of receiving said AGC signal at said compensation circuit input and modifying said AGC signal according to predetermined gain compensation characteristics so as to provide a modified AGC signal at said compensation circuit output;

a first amplifier having a pair of inputs and an output, one of said first amplifier inputs coupled to said compensation circuit output and another one of said first amplifier inputs capable of receiving said input signal, said first amplifier having portions of a gain range in decibels (dB) which are piecewise linear with respect to said AGC signal, and said first amplifier gain range linear with respect to said modified AGC signal;

a filter having an input and an output, said filter input coupled to said first amplifier output; and

a second amplifier having a pair of inputs and an output, one of said second amplifier inputs coupled to said compensation circuit output and another one of said second amplifier inputs coupled to said filter output, said second amplifier having portions of a gain range in dB which are piecewise linear with respect to said AGC signal, and said second amplifier gain range linear with respect to said modified AGC signal.

7. The circuit of claim 6 wherein said filter comprises a surface acoustic wave (SAW) bandpass filter.

8. The circuit of claim 6 wherein said first and second amplifiers each comprise a dual gate FET amplifier.

9. The circuit of claim 7 wherein said first and second amplifiers each comprise a dual gate FET amplifier.

10. The circuit of claim 9 wherein:

said first amplifier further comprises a first impedance matching circuit coupled to said first amplifier output for matching an input impedance of said filter for a predetermined level of triple transit response of said filter; and

said second amplifier further comprises a second impedance matching circuit coupled to said first amplifier other input for matching an output impedance of said filter for said predetermined level of triple transit response of said filter: and

wherein said filter has an insertion loss corresponding to impedance levels established by said first amplifier in combination with said first impedance matching circuit and said second amplifier in combination with said second impedance matching circuit.

11. The circuit of claim 6 wherein said compensation circuit comprises:

an operational amplifier having a noninverting input capable of receiving a reference voltage, an inverting input capable of receiving an AGC signal and an output: and

a nonlinear feedback network coupled between said operational amplifier output and said inverting input.

12. The circuit of claim 11 further comprising thermal compensation means coupled to said noninverting input for controlling the level of said reference voltage as applied to said noninverting input.

13. The circuit of claim 9 wherein said compensation circuit comprises:

an operational amp having a noninverting input capable of receiving a reference voltage, an inverting input capable of receiving an AGC signal and an output: and

a nonlinear feedback network coupled between said op amp output and said inverting input.

14. The circuit of claim 13 further comprising compensation means coupled to said noninverting input for controlling the level of said reference voltage as applied to said noninverting input.

15. An method for amplifying over a high dynamic range an input signal where signal gain in decibels (dB) is a linear function of a control signal, said method comprising the steps of:

generating, in response to a linear control signal, a corresponding compensation signal according to predetermined gain compensation characteristics:

amplifying an input signal at an input gain level determined by said compensation signal and providing a corresponding first amplified signal, said first amplified signal being of a gain in dB which is a linear function of said control signal:

filtering said first amplified signal: and

amplifying said filtered first amplified signal at an output gain level determined by said compensation signal and providing a corresponding second amplified signal, said second amplified signal being of a gain in dB which is a linear function of said control signal.

16. The method of claim 15, wherein said input signal is amplified by a first amplifier, said first amplified signal is filtered by a filter having a predetermined input and output impedance, and said filtered first amplified signal is amplified by a second amplifier, said method further comprising the step of providing impedance matching of said first and second amplifiers to said filter for a predetermined level of filter triple transit response.

17. The method of claim 15 wherein said step of generating said compensation signal comprises the steps of:

modifying said control signal according to a first gain compensation curve when said control signal is below a first predetermined level: and

modifying said control signal according to a second gain compensation curve when said control signal is above said first predetermined level.

18. The amplification circuit of claim 1 wherein said input and output amplification means each provide signal gain in dB as a first linear function of said control signal over a portion of said predetermined gain range and as a second linear function of said control signal over gains exceeding said predetermined gain range portion, said compensation means modifying said control signal corresponding to input and output amplification means gains exceeding said predetermined gain range.

19. The circuit of claim 6 wherein said first and second amplifiers are responsive to said modified AGC signal for providing a signal gain in dB over said gain range which is in linear correspondence with said AGC signal.

* * * * *

US005101501A

United States Patent [19]

Gilhousen et al.

[11] Patent Number: 5,101,501

[45] Date of Patent: Mar. 31, 1992

[54] METHOD AND SYSTEM FOR PROVIDING A SOFT HANDOFF IN COMMUNICATIONS IN A CDMA CELLULAR TELEPHONE SYSTEM

[75] Inventors: Klein S. Gilhousen; Roberto Padovani, both of San Diego; Charles E. Wheatley, III, Del Mar, all of Calif.

[73] Assignee: Qualcomm Incorporated, San Diego, Calif.

[21] Appl. No.: 433,030

[22] Filed: Nov. 7, 1989

[51] Int. Cl.[5] H04Q 7/00; H04M 11/00

[52] U.S. Cl. 455/33; 455/34; 455/56; 379/60; 375/1

[58] Field of Search 455/17, 32-34, 455/54, 56, 67; 379/59, 60, 63; 375/1

[56] References Cited

U.S. PATENT DOCUMENTS

3,819,872	6/1974	Hamrick	379/60
4,112,257	9/1978	Frost	455/33
4,222,115	9/1980	Cooper et al.	455/33
4,398,063	8/1983	Hass et al.	455/33
4,608,711	8/1986	Goldman	455/33
4,765,753	8/1988	Schmidt	455/33

Primary Examiner—Curtis Kuntz
Assistant Examiner—Andrew Faile
Attorney, Agent, or Firm—Russell B. Miller

[57] ABSTRACT

In a cellular telephone system a system for directing communications between a mobile user and cell-sites as a mobile user changes cell-site service areas. The mobile user includes an apparatus for, while in communication with another system user via one cell-site, determining a transition of the mobile user from the cell-site service area to the service area of another cell-site. The system includes circuitry responsive to the indication for coupling communications between the mobile user and the other system user via the new cell-site while the mobile user also remains in communication with the system user via the first cell-site. The system further includes apparatus responsive to the coupling of the communications between the mobile user and the other system user via the new cell-site for terminating the communications between the mobile user and another system user via cell-site with communications continuing between the mobile user and the system user via the new cell-site.

23 Claims, 4 Drawing Sheets

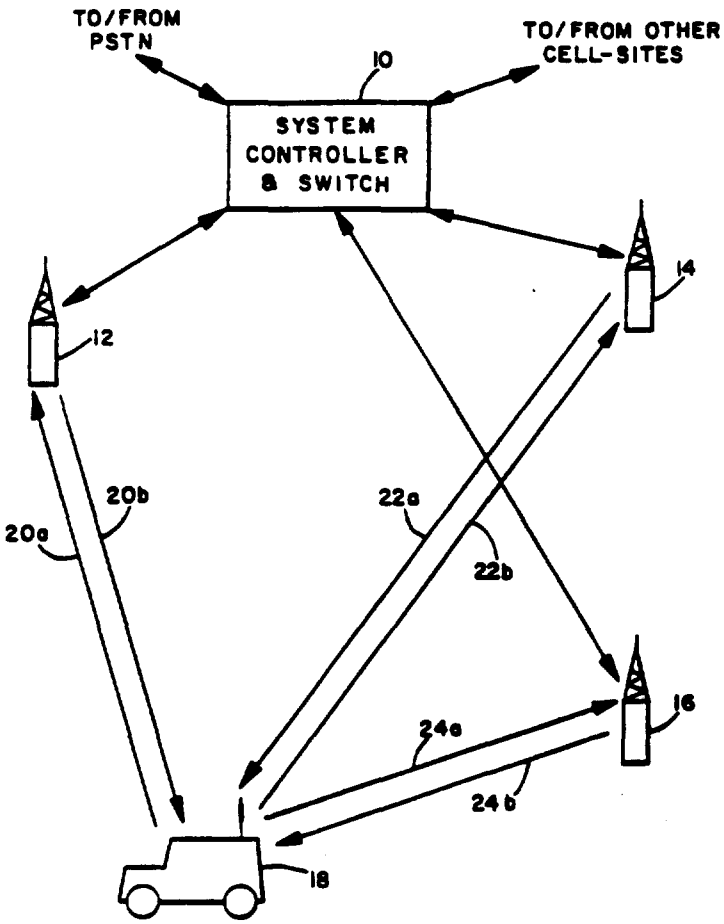

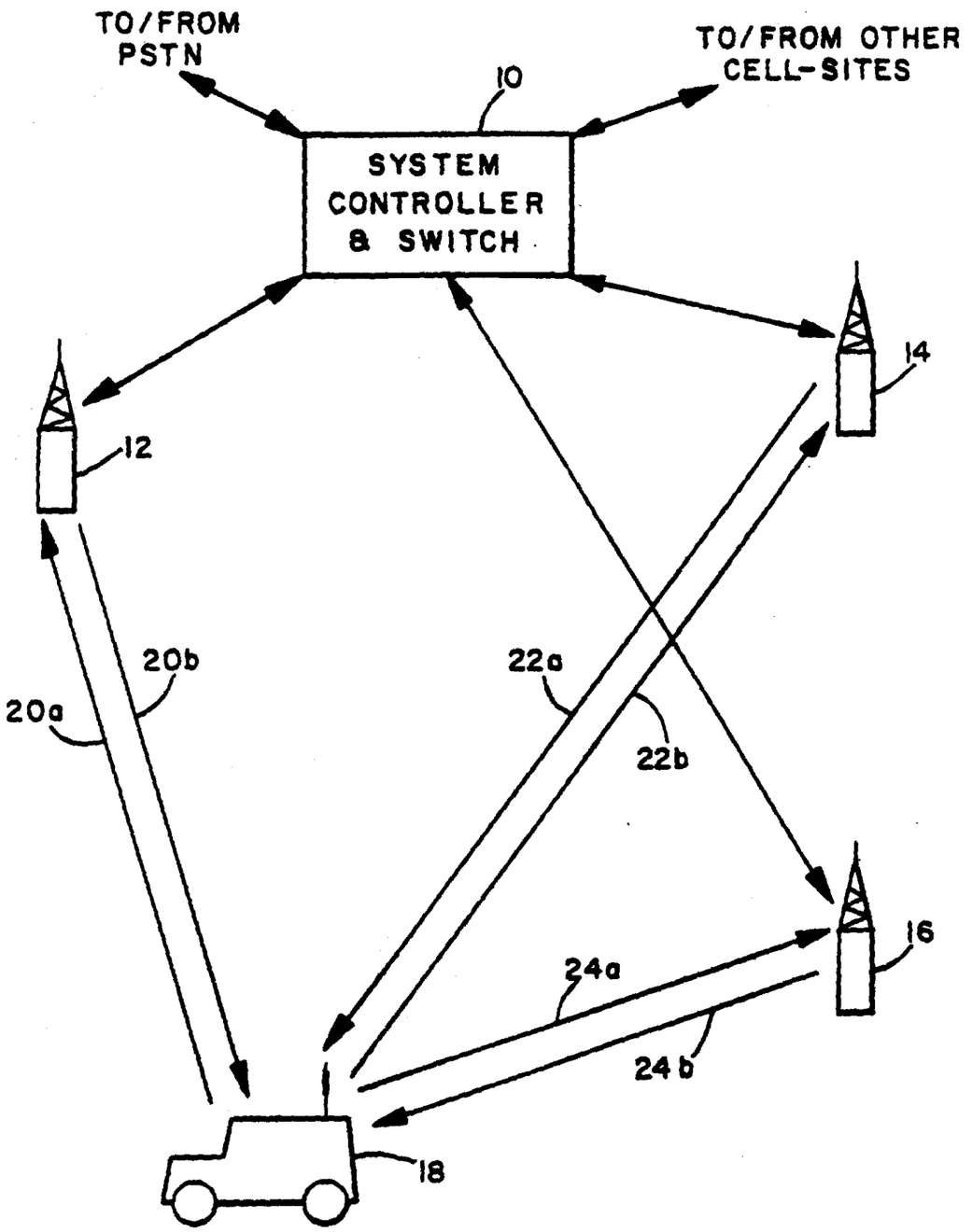
TO/FROM
PSTN
TO/FROM OTHER
CELL-SITES
10
SYSTEM
CONTROLLER
& SWITCH
12
14
16
18
20a
20b
22a
22b
24a
24b

FIG. 1

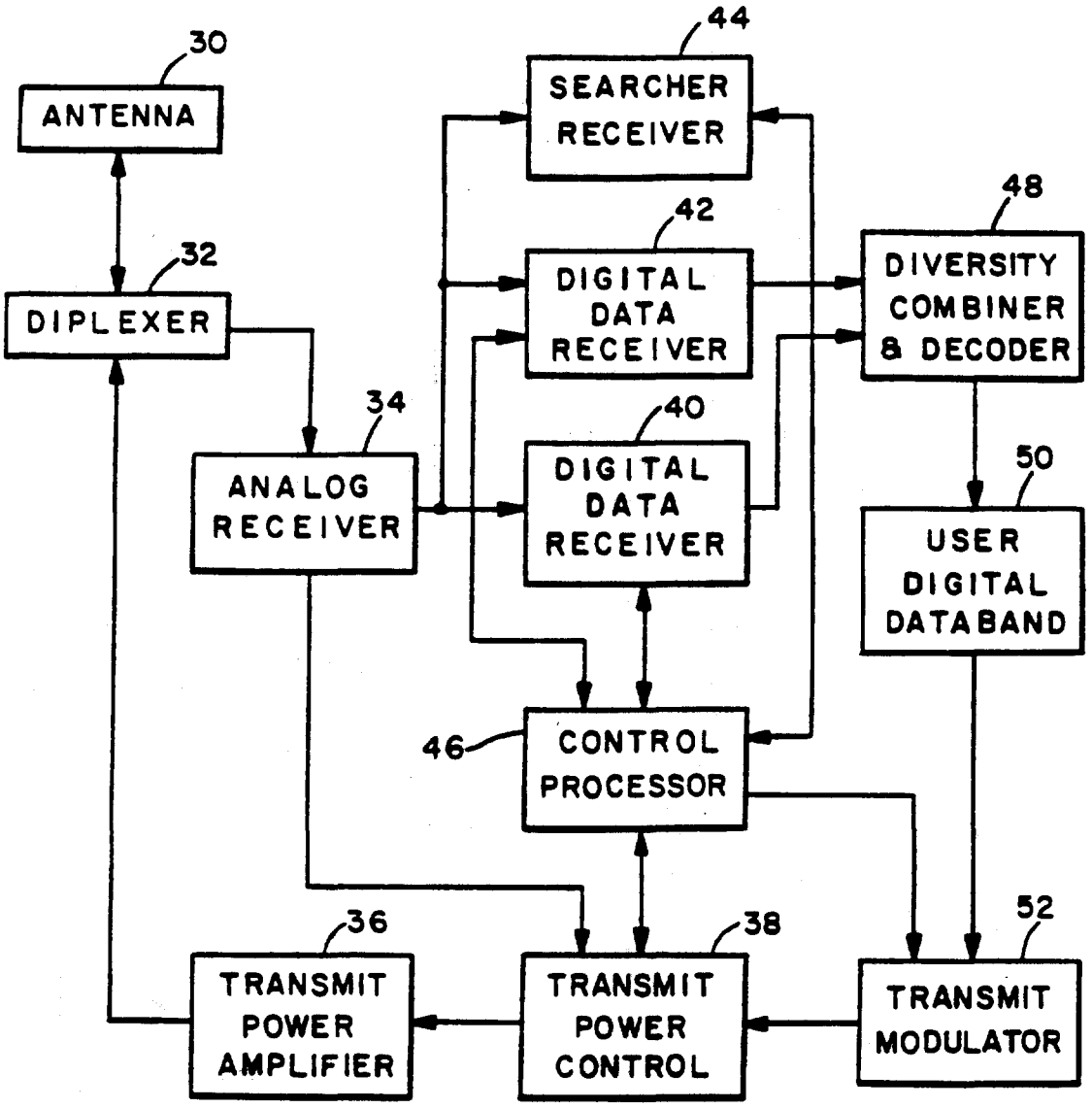
30
ANTENNA
32
DIPLEXER
34
ANALOG RECEIVER
44
SEARCHER RECEIVER
42
DIGITAL DATA RECEIVER
40
DIGITAL DATA RECEIVER
48
DIVERSITY COMBINER & DECODER
50
USER DIGITAL DATABAND
46
CONTROL PROCESSOR
36
TRANSMIT POWER AMPLIFIER
38
TRANSMIT POWER CONTROL
52
TRANSMIT MODULATOR

FIG. 2

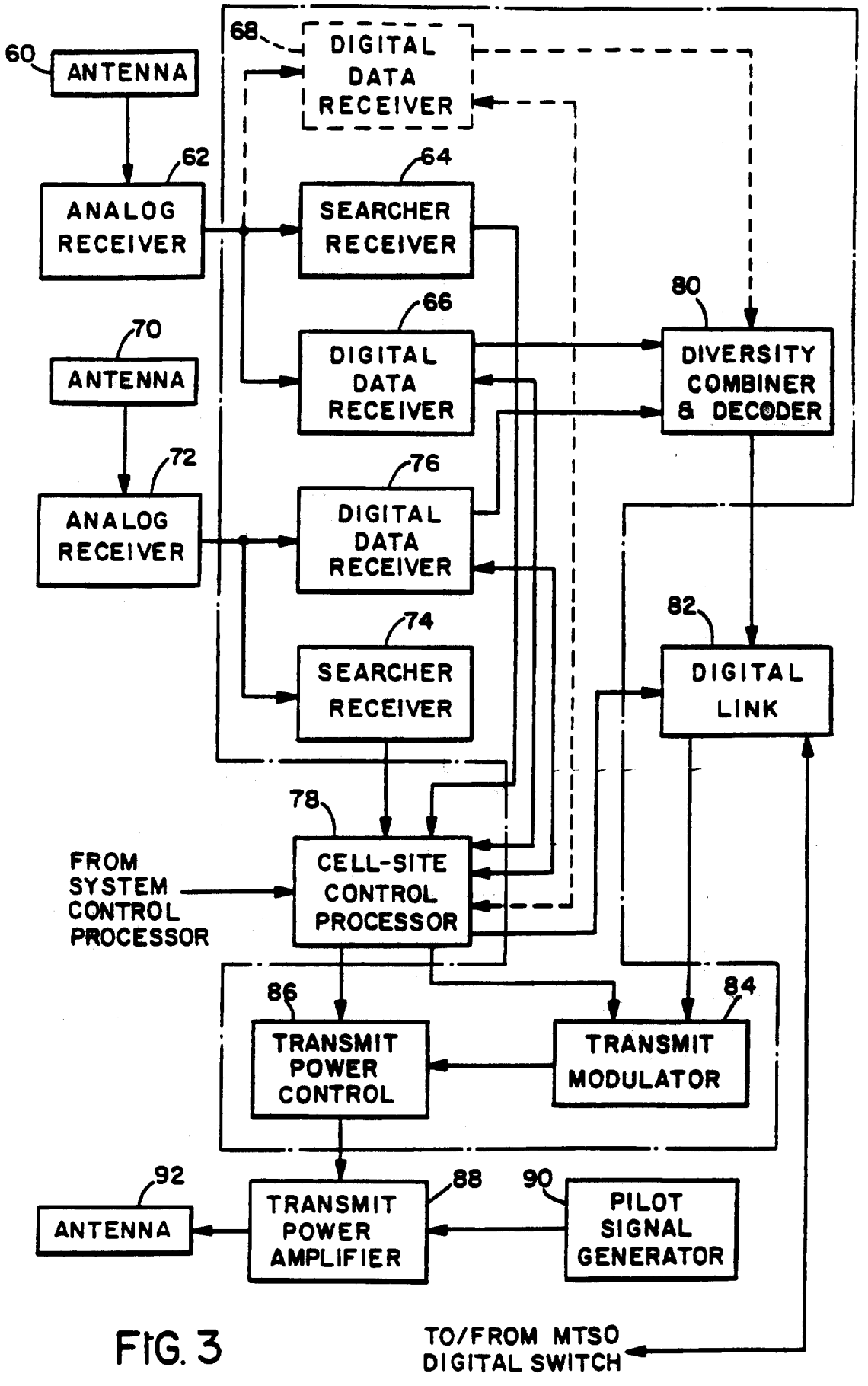
60
ANTENNA
62
ANALOG RECEIVER
68
DIGITAL DATA RECEIVER
64
SEARCHER RECEIVER
66
DIGITAL DATA RECEIVER
70
ANTENNA
72
ANALOG RECEIVER
76
DIGITAL DATA RECEIVER
74
SEARCHER RECEIVER
80
DIVERSITY COMBINER & DECODER
82
DIGITAL LINK
78
CELL-SITE CONTROL PROCESSOR
FROM SYSTEM CONTROL PROCESSOR
86
TRANSMIT POWER CONTROL
84
TRANSMIT MODULATOR
92
ANTENNA
TRANSMIT POWER AMPLIFIER
88
90
PILOT SIGNAL GENERATOR
TO/FROM MTSO DIGITAL SWITCH

FIG. 3

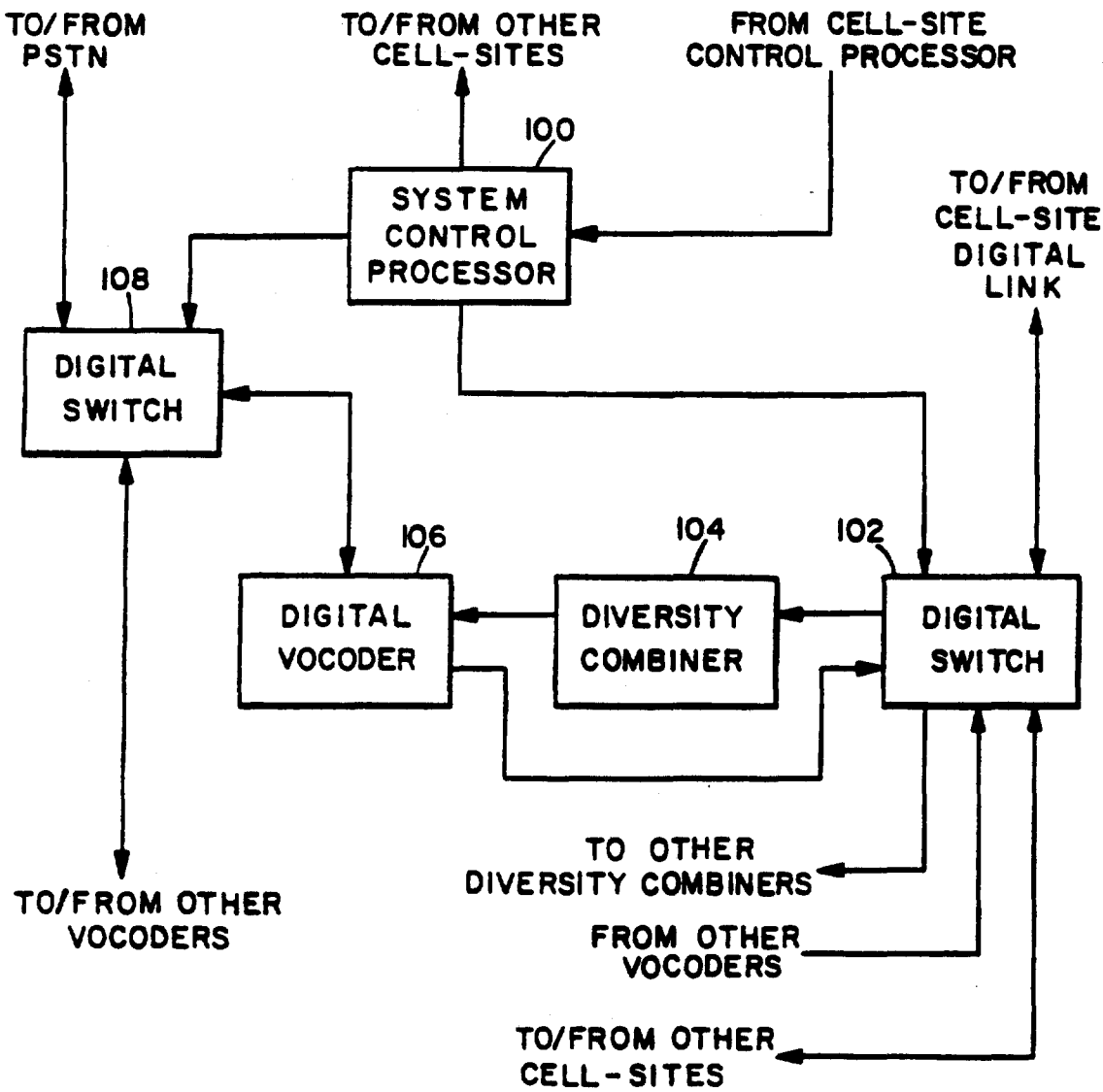
TO/FROM PSTN
TO/FROM OTHER CELL-SITES
FROM CELL-SITE CONTROL PROCESSOR
100
SYSTEM CONTROL PROCESSOR
TO/FROM CELL-SITE DIGITAL LINK
108
DIGITAL SWITCH
106
104
102
DIGITAL VOCODER
DIVERSITY COMBINER
DIGITAL SWITCH
TO/FROM OTHER VOCODERS
TO OTHER DIVERSITY COMBINERS
FROM OTHER VOCODERS
TO/FROM OTHER CELL-SITES

FIG. 4

METHOD AND SYSTEM FOR PROVIDING A SOFT HANDOFF IN COMMUNICATIONS IN A CDMA CELLULAR TELEPHONE SYSTEM

BACKGROUND OF THE INVENTION

I. Field of the Invention

The present invention relates to cellular telephone systems. More specifically, the present invention relates to a novel and improved system for controlling handoff in communications of cell-site stations with a mobile unit in a code division multiple access (CDMA) cellular telephone system.

II. Description of the Related Art

The use of code division multiple access (CDMA) modulation techniques is but one of several techniques for facilitating communications in which a large number of system users are present. Although other techniques such as time division multiple access (TDMA), frequency division multiple access (FDMA) and AM modulation schemes such as amplitude companded single sideband (ACSSB) are known, CDMA has significant advantages over these other modulation techniques. The use of CDMA techniques in a multiple access communication system is disclosed in U.S. patent application Ser. No. 06/921,261, filed Oct. 17, 1986, entitled "SPREAD SPECTRUM MULTIPLE ACCESS COMMUNICATION SYSTEM USING SATELLITE OR TERRESTRIAL REPEATERS", now U.S. Pat. No. 4,901,307 assigned to the Assignee of the present invention, the disclosure thereof incorporated by reference.

In the just mentioned patent, a multiple access technique is disclosed where a large number of mobile telephone system users, each having a transceiver, communicate through satellite repeaters or terrestrial base stations (also known as cell-site stations, or for short, cell-sites) using code division multiple access (CDMA) spread spectrum communication signals. In using CDMA communications, the frequency spectrum can be reused multiple times thus permitting an increase in system user capacity. The use of CDMA techniques results in a much higher spectral efficiency than can be achieved using other multiple access techniques.

In the conventional cellular telephone systems the available frequency band is divided into channels typically 30 KHz in bandwidth while analog FM modulation techniques are used. The system service area is divided geographically into cells of varying size. The available frequency channels are divided into sets with each set usually containing an equal number of channels. The frequency sets are assigned to cells in such a way as to minimize the possibility of co-channel interference. For example, consider a system in which there are seven frequency sets and the cells are equal size hexagons. A frequency set used in one cell will not be used in the six nearest or surrounding neighbors of that cell. Furthermore, the frequency set in one cell will not be used in the twelve next nearest neighbors of that cell.

In the conventional cellular telephone system, the handoff scheme implemented is intended to allow a call to continue when a mobile telephone crosses the boundary between two cells. The handoff from one cell to another is initiated when the cell-site receiver handling the call notices that the received signal strength from the mobile telephone falls below a predetermined threshold value. A low signal strength indication implies that the mobile telephone must be near the cell

border. When the signal level falls below the predetermined threshold value, the cell-site asks system controller to determine whether a neighboring cell-site receives the mobile telephone signal with better signal strength than the current cell-site.

The system controller in response to the current cell-site inquiry sends messages to the neighboring cell-sites with a handoff request. The cell-site neighboring the current cell-site employs special scanning receivers which look for the signal from the mobile unit on the specified channel. Should one of the neighboring cell-sites report an adequate signal level to the system controller, then a handoff will be attempted.

Handoff is then initiated when an idle channel from the channel set used in the new cell-site is selected. A control message is sent to the mobile telephone commanding it to switch from the current channel to the new channel. At the same time, the system controller switches the call from the first cell-site to the second cell-site.

In the conventional system a call will be discontinued if the handoff to the new cell-site is unsuccessful. There are many reasons that a failure in handoff may occur. Handoff can fail if there is no idle channel available in the neighboring cell for communicating the call. Handoff can also fail if another cell-site reports hearing the mobile telephone in question, when in fact this cell-site actually hears a different mobile unit using the same channel in a completely different cell. This reporting error will result in the call being switched to a wrong cell, typically one in which signal strength is insufficient to maintain communications. Furthermore should the mobile telephone fail to hear the command to switch channels, the handoff will fail. Actual operating experience indicates that handoff failures occur frequently which questions the reliability of the system.

Another common problem in the conventional telephone system occurs when the mobile telephone is near the border between two cells. In this situation the signal level tends to fluctuate at both cell-sites. This signal level fluctuation results in a ping-ponging situation in which repeated requests are made to hand the call back and forth between the two cell-sites. Such additional unnecessary handoff requests increase the possibility of the mobile unit incorrectly hearing the channel switch command or fail in hearing the command at all. Furthermore, the ping-ponging situation raises the possibility that the call will be discontinued if it is unnecessarily transferred to a cell in which all channels are currently in use and thus unavailable for accepting the handoff.

It is therefore an object of the present invention to provide in a cellular telephone system improvements in call handoff between cell-sites and thus provide greater service reliability.

SUMMARY OF THE INVENTION

In a CDMA cellular telephone system, the same frequency band is used for all cells. The CDMA waveform properties that provide processing gain are also used to discriminate between signals that occupy the same frequency band. A mobile telephone or unit thus need not switch frequencies when handoff of the call is made from one cell-site to another. Furthermore, the probability that the call will be discontinued if the handoff command is received in error is substantially reduced.

In a CDMA cellular telephone system, each cell-site has a plurality of modulator-demodulator units or

spread spectrum modems. Each modem consists of a digital spread spectrum transmit modulator, at least one digital spread spectrum data receiver and a searcher receiver. Each modem at the cell-site is assigned to a mobile unit as needed to facilitate communications with the assigned mobile unit. Therefore in many instances many modems are available for use while other ones may be active in communicating with respective mobile units. In the present invention a handoff scheme is employed for a CDMA cellular telephone system in which a new cell-site modem is assigned to a mobile unit while the old cell-site continues to service the call. When the mobile unit is located in the transition region between the two cell-sites, the call can be switched back and forth between cell-sites as signal strength dictates. Since the mobile unit is always communicating through at least one cell-site, no disrupting effects to the mobile unit or in service will occur.

When mobile unit communications are firmly established with the new cell-site, e.g. the mobile unit is well within the new cell, the old cell-site discontinues servicing the call. The just described handoff techniques can be considered as a "soft" handoff in communications between cell-sites with the mobile unit. The soft handoff is in essence a make-before-break switching function. In contrast, conventional cellular telephone systems can be considered as providing a break-before-make switching function.

In a CDMA cellular telephone system of the present invention, a soft handoff technique is implemented which also permits the mobile unit to initiate a handoff. The mobile unit is also permitted to determine the best new cell-site to which communications are to be transferred to from an old cell-site. Although it is preferred that the mobile unit initiate the handoff request and determine the new cell-site, handoff process decisions may be made as in the conventional cellular telephone system. As discussed previously with respect to conventional systems, the cell-site determines when a handoff may be appropriate and, via the system controller, request neighboring cells to search for the mobile unit signal. The cell-site receiving the strongest signal as determined by the system controller then accepts the handoff.

In the CDMA cellular telephone system, each cell-site transmits a "pilot carrier" signal. This pilot signal is used by the mobile units to obtain initial system synchronization and to provide robust time, frequency and phase tracking of the cell-site transmitted signals.

Each cell-site also transmits a "setup" channel comprised of spread spectrum modulated information, such as cell-site identification, system timing, mobile paging information and various other control signals. The pilot signal transmitted by each cell-site is of the same spreading code but with a different code phase offset. Phase offset allows the pilot signals to be distinguished from one another resulting in distinguishment between cell-sites from which they originate. Use of the same pilot signal code allows the mobile unit to find system timing synchronization by a single search through all pilot signal code phases. The strongest pilot signal, as determined by a correlation process for each code phase, is readily identifiable. The identified pilot signal corresponds to the pilot signal transmitted by the nearest cell-site.

Upon acquisition of the strongest pilot signal, i.e. initial synchronization of the mobile unit with the strongest pilot signal, the mobile unit searches for the appropriate setup channel of that cell-site. The setup channel is transmitted by the cell-site using one of a plurality of different predetermined spread spectrum codes. In an exemplary embodiment of the present invention, twenty-one different codes are used. However, it should be understood that more or less codes could be used in the setup channel as determined by system parameters. The mobile unit then begins a search through all of the different codes used in the setup channel.

When the mobile unit identifies the appropriate setup code for that cell-site, system information is received and processed. The mobile unit further monitors the setup channel for control messages. One such control message would indicate a call is waiting for transfer to this mobile unit.

The mobile unit continues to scan the received pilot carrier signal code at the code offsets corresponding to neighboring cell-site transmitted pilot signals. This scanning is done in order to determine if the pilot signal emanating from neighboring cells is becoming stronger than the pilot signal first determined to be strongest. If, while in this call inactive mode, a neighbor cell-site pilot signal becomes stronger than that of the initial cell-site transmitted pilot signal, the mobile unit will acquire the stronger pilot signal and corresponding setup channel of the new cell-site.

When a call is initiated, a pseudonoise (PN) code address is determined for use during the course of this call. The code address may be either assigned by the cell-site or be determined by prearrangement based upon the identity of the mobile unit. After a call is initiated the mobile unit continues to scan the pilot signal transmitted by cell-sites located in neighboring cells. Pilot signal scanning continues in order to determine if one of the neighboring cell-site transmitted pilot signals becomes stronger than the pilot signal transmitted by the cell-site the mobile unit is in communication with. When the pilot signal transmitted by a cell-site located in a neighboring cell becomes stronger than the pilot signal transmitted by a cell-site in the current cell, it is an indication to the mobile unit that a new cell has been entered and that a handoff should be initiated. In response to this pilot signal strength determination, the mobile unit generates and transmits a control message to the cell-site presently servicing the call. This control message, indicative that a new cell-site transmitted pilot signal is now stronger than the current cell-site transmitted pilot signal, is provided to the system controller. The control message further contains information identifying the new cell-site and PN code. The control message as relayed to the system controller is interpreted that a handoff in mobile unit communications to the identified new cell-site is to begin.

The system controller now begins the handoff process. It should be understood that during handoff the PN code address of the particular mobile unit which is to undergo the handoff process need not change. The system controller begins the handoff by assisting in the assignment of a modem located in the new cell-site to the call. This modem is given the PN address associated with the call in communications between the mobile unit and the current cell-site modem. The new cell-site modem assigned to service the call searches for and finds the mobile unit transmitted signal. The cell-site modem also begins transmitting an outbound signal to the mobile unit. The mobile unit searches for this outbound signal in accordance with the signal and setup channel information provided by the new cell-site.

When the new cell-site modem transmitted signal is acquired, the mobile unit switches over to listening to this signal. The mobile unit then transmits a control message indicating that handoff is complete. The control message is provided by either or both of the old and new cell-site modems to the system controller. In response to this control message the system controller switches the call over to the new cell-site modem alone while discontinuing the call through the old cell-site modem. The old cell-site modem then enters a pool of idle modems available for reassignment.

As an additional improvement, the handoff process can introduce a second mode of operation. This second mode is referred to herein as the cell-site diversity mode. The subject matter on the cell-site diversity mode is further disclosed in copending U.S. patent application entitled "DIVERSITY RECEIVER IN A CDMA CELLULAR TELEPHONE SYSTEM", Ser. No. 07/432,552, filed Nov. 7, 1989, by the inventors hereof and assigned to the Assignee of the present invention.

In the cell-site diversity mode the call is allowed to linger in the in-between state as described above with reference to the call being processed by two cell-sites. In the exemplary embodiment described herein with reference to the mobile telephone of the present invention, a total of three demodulator processors or receivers are utilized. One of the receivers is used for the scanning function, while the two other receivers are used as a two channel diversity receiver. During operation in a single cell, the scanning receiver attempts to find the cell-site transmitted signal travelling upon multiple paths to the mobile unit. These multipath signals are typically caused by reflections of the signals from terrain, buildings and other signals obstructions. When two or more such reflections are found, the two receivers are assigned to the two strongest paths. The scanning receiver continues to evaluate the multiple paths to keep the two receivers synchronized with signals on the two strongest paths as path conditions change.

In the cell-site diversity mode, the strongest two paths from each cell-site is determined by the search receiver. The two receivers are assigned to demodulate the signals on the strongest two paths of the four paths available from the original cell-site and from the new cell-site. The data demodulation process uses information from both of these receivers in a diversity combining operation. The result of this diversity combining operation is a greatly improved resistance to deleterious fading that may occur in the multi-paths cellular telephone environment.

Although different types of diversity combining techniques are known in the art, the present invention uses diversity combining to significantly advance the quality and reliability of communications in a mobile cellular telephone system. In the present invention a form of maximal ratio combining is utilized. The signal-to-noise ratio is determined for both paths being combined with the contributions from the two paths weighted accordingly. Combining is coherent since pilot signal demodulation allows the phase of each path to be determined.

In the path from the mobile unit to the two cell-sites, path diversity reception is also obtained by having both cell-sites demodulate the mobile unit transmitted signals. Both cell-sites forward their demodulated data signals to the system controller along with an indication of signal quality for each cell-site receiver. The system controller then combines the two versions of the mobile unit signal and selects the signal with the best quality indication. It should be understood that it is possible to transmit the undecoded or even the undemodulated signals to the system controller in order to allow a better diversity combining process to be utilized.

The handoff process in the cell diversity mode is initiated as previously discussed. The mobile unit determines that a neighboring cell-site transmitted signal is of a signal strength great enough to allow good quality demodulation of the signal. The mobile unit transmits a control message to the current cell-site indicating the identity of this new cell-site and a request for the cell diversity mode. The cell-site then relays the cell-site identity and request to the system controller.

The system controller responds by connecting the call to a modem in the new cell-site. The system controller then performs diversity combining of the signals received by the two cell-sites while the mobile unit performs diversity combining of the signals received from the two cell-sites. The cell diversity mode continues as long as signals received from both cell-sites are of a level sufficient to permit good quality demodulation.

The mobile unit continues to search for signals transmitted from other cell-sites. If a third cell-site transmitted signal becomes stronger than one of the original two cell-site signals, the control message is then transmitted by the mobile unit via at least one current cell-site to the system controller. The control message indicates the identity of this cell-site and a request for handoff. The system controller then discontinues the call being communicated via the weakest cell-site signal of the three while providing the call through the two strongest cell-sites. Should the mobile units be equipped with additional receivers, such as three receivers, a triple cell-site diversity mode may be implemented.

The cell-site diversity mode is terminated when the mobile unit determines that only one cell-site is providing adequate signals for quality demodulation. The mobile unit then sends a control message indicative of the cell-site to remain in communication upon termination of the cell-site diversity mode. The cell-site diversity mode may also be terminated by the system controller if the system were to become overloaded with an insufficient number of modems available to support all mobile unit requests for this mode of operation. The cell-site diversity mode as discussed is implemented by decision being made at the mobile unit to operate in the cell-site diversity mode. However, it should be understood that the cell-site diversity mode can be implemented with the decisions for operation in this mode being made at the system controller.

The present invention provides a substantial improvement over present cellular telephone systems with respect to mobile unit handoff. The make-before-break handoff mechanism of the present invention is a significant improvement in overall system reliability with lower service disruption. The implementation of a cell-site diversity mode provides further improvements over conventional cellular telephone systems by providing additional system reliability and quality in communications.

BRIEF DESCRIPTION OF THE DRAWINGS

The features and advantages of the present invention will become more apparent from the detailed description set forth below when taken in conjunction with the drawings in which like reference characters correspond throughout and wherein: