United States of America
Federal Communications Commission
Washington, D.C. 20554

For Commission Use Only
File No.

Application for Authority to Construct or Make Changes in an International or Experimental Broadcast Station

(Carefully read instructions before filling out Form—RETURN ONLY FORM TO FCC)

Section I

1. Name of Applicant (See Instruction D): TURMS TECH LLC

Street Address (24 characters): 420 LEXINGTON AVE #2455

City (20 characters): NEW YORK

State: NY

ZIP Code: 10170

Telephone No. (Include Area Code): (212) 983-1910

2. Name of person to whom communication should be sent if different from item 1 above.

Name: PAOLO CUGNASCA

Street Address: 420 LEXINGTON AVE. #2455

City: NEW YORK

State: NY

ZIP Code: 10170

Telephone No. (Include Area Code): (212) 983-1910

3. Purpose of Application (Check appropriate boxes)

(a) Application is for: [X] New Station [ ] Change in existing authorization

[ ] Major [ ] Minor

(b) If this application is for a change in existing facilities, complete Section I plus any other Sections necessary to show all substantial changes in information previously filed with the Commission. Indicate below the Sections completed and filed with this application.

[ ] Section II [ ] Section III [ ] Section IV [ ] Section V [ ] Section VG [ ] Section VI

(c) In the space below refer to information already on file with the Commission which, in accordance with Instruction E, may be incorporated in this application by proper reference.

File or Form No. and Date	Section No.	Paragraph No.

4. Requested Facilities

Frequency *(not applicable to international stations)*

Antenna Input Power: 10 kW

Hours of Operation: 24/24

Call Sign *(if application is for an existing station)*

Type of Station: [X] International [ ] Experimental television [ ] Experimental facsimile

[ ] Developmental broadcast station

Location of Main Studio

Street Address | City | State | ZIP Code

FCC 309
April 1985

Application for facilities other than international broadcast stations signify their understanding that:

(1) All operation upon the frequency requested is for experimental purposes only;

(2) The frequency requested may not be the best suited to the particular experimental work to be carried on;

(3) The frequency requested may not be allocated for any service that may be developed as a result of the experimental operation;

(4) Any frequency which may be assigned is subject to change without prior notice or right to hearing; and

(5) Any authorization issued pursuant to the application may be modified or withdrawn at any time without prior notice or right to hearing.

The Applicant hereby waives any claim to the use of any particular frequency or of the electromagnetic spectrum as against the regulatory power of the United States because of the previous use of the same, whether by license or otherwise, and requests an authorization in accordance with this application. (See Section 304 of the Communications Act of 1934.)

The Applicant represents that this application is not filed for the purpose of impeding, obstructing, or delaying determination on any other application with which it may be in conflict.

The Applicant acknowledges that all the statements made in this application and attached exhibits are considered material representations, and that all the exhibits are a material part hereof and are incorporated herein as if set out in full in the application.

Certification

I certify that the statements in this application are true, complete, and correct to the best of my knowledge and belief, and are made in good faith.

Signed and dated this 11th day of APRIL, 2017

WILLFUL FALSE STATEMENTS MADE ON THIS FORM ARE PUNISHABLE BY FINE AND IMPRISONMENT, U.S. CODE, TITLE 18, SECTION 1001.

PAOLO CUGNASCA
(Name of Applicant)

BY _____
(Signature)

TITLE PRESIDENT

Exhibits furnished as required by this form:

Exhibit No.	Para. No. of Form	Name of officer or employee (1) by whom or (2) under whose direction exhibit was prepared (show which)	Official Title
EXHIBIT 1	SECTION II.4.G	P. CUGNASCA (1)	PRESIDENT
EXHIBIT 2	SECTION IV.1	P. CUGNASCA (1)	PRESIDENT
EXHIBIT E (MULTIPLE)	SECTION V	P. CUGNASCA (2)	PRESIDENT
LIST ATTACHED			

Section II

Legal Qualifications	Name of Applicant TURMS TECH LLC

1. Legal identity of applicant (Put "X" in appropriate box)

☐ Individual ☐ Partnership ☐ Corporation

☐ Government Entity ☒ Other LIMITED LIABILITY COMPANY
(Specify)

2. If applicant is an individual, is applicant a citizen of the United States? ☐ YES ☐ NO

3. If applicant is a partnership, are all partners citizens of the United States? ☐ YES ☐ NO

4. If applicant is a corporation:

a. Under laws of what state was it organized? DELAWARE

b. Is more than one-fifth of the capital stock of the corporation owned of record or may it be voted by aliens or their representatives or by a foreign government or representative thereof, or by any corporation organized under the laws of a foreign country? ☐ YES ☒ NO

c. Is any officer or director of the corporation an alien? ☒ YES ☐ NO

If the answer is "yes", give the following for each:

Name	Nationality	Position
GIANANTONIO BULGHERONI	ITALIAN	DIRECTOR

d. Is applicant directly or indirectly controlled by any other corporation? ☒ YES ☐ NO

If the answer is "yes", give the following for the controlling corporation:

Name	Address	State in which Organized
TURMS HOLDINGS LLC	c/o EMCOR 420 LEXINGTON AVE. #2455 NEW YORK NY 10170	DELAWARE

e. Is more than one-fourth of the capital stock of the controlling corporation either owned of record, or may it be voted by aliens, their representatives, or by a foreign government or representative thereof, or by any corporations organized under the laws of a foreign country? ☐ YES ☒ NO

f. Is any officer or more than one-fourth of the directors of the corporation an alien? ☐ YES ☒ NO

If the answer is "yes", give the name, nationality, and position of each, and give the total number of directors of the corporation:

Name	Nationality	Position	Number of Directors

g. Is the above-described controlling corporation in turn a subsidiary? ☒ YES ☐ NO

If the answer is "yes", attach as EXHIBIT NO. 1 additional sheets answering the holding company questions in this paragraph for each company, to and including the organization having ultimate control.

5. a. If applicant is an unincorporated association, give the following:

Total number of members	Number of Alien Members (if any)

b. State the following for alien officers or directors (if any):

Name	Nationality	Position

6. a. What is applicant's principal business?

BROADCAST AND DATA SERVICES

b. Does applicant or any party to this application have an interest in, or connection with, any AM, FM, or television broadcast station (either domestic or foreign), or any application pending before the Commission? ☐ YES ☒ NO

If Yes, indicate in Exhibit No. _____ giving full particulars.

7. Is applicant a representative of an alien or of a foreign government? ☐ YES ☒ NO

If the answer is Yes, explain.

8. a. Has any radio station authorization previously issued to the applicant or party to this application been revoked, either by the Commission or by court order? ☐ YES ☒ NO

b. Has any previous application by the applicant or party to this application been denied by the Commission or by a predecessor agency? ☐ YES ☒ NO

If the answer to (a) and/or (b) is "Yes", explain:

9. a. Has applicant or any party to this application been found guilty by any court of any felony? ☐ YES ☒ NO

b. Has applicant or any party to this application been finally adjudged guilty by a federal court of the violation of the laws of the United States relating to unlawful monopoly, restraint of trade, and/or unfair methods of competition? ☐ YES ☒ NO

If the answer to (a) and/or (b) is "Yes", explain:

Section III

Financial Qualifications	Name of applicant	FOR COMMISSIONS USE ONLY File No.

NOTE: If this application is for a change in an operating facility do not fill out this section.

	YES	NO
1. The applicant certifies that sufficient net liquid assets are on hand or are available from committed sources to construct and operate the requested facilities for three months without revenue.	☒	☐
2. The applicant certifies that:		
(a) it has a reasonable assurance of a present firm intention for each agreement to furnish capital or purchase capital stock by parties to the application, each loan by banks, financial institutions or others, and each purchase of equipment on credit;		
(b) it can and will meet all contractual requirements as to collateral, guarantees, and capital investment;		
(c) it has determined that a reasonable assurance exists that all such sources (excluding banks, financial institutions, and equipment manufacturers) have sufficient net liquid assets to meet these commitments.	☒	☐

Section IV **Statement of Program Service of Broadcast Applicant**

1. If programs are to be broadcast, attach as Exhibit No. 2 an outline of program plans and policies.

2. Research program (not applicable to international stations)

Attach as Exhibit No. _____ a statement outlining in detail the program of research and experimentation proposed and the object or objects thereof including therein a statement that upon authorization the applicant can and will proceed immediately with the proposed program, that the transmission of signals by radio is essential to the proposed program of research and experimentation, that the program of research and experimentation will be conducted by qualified personnel and include as a separate Exhibit No. _____ names and qualifications and an estimate of the period of time which will be required to complete the experimental program and terminate operation. If the transmission of broadcast program material is proposed, supply details as to the source of such program material and explicitly the reasons why the data sought cannot be obtained through the use of an unmodulated carrier, pulses, tones, or test pattern. If public participation is proposed to be sought, state the need therefor.

Section V

ENGINEERING DATA	NAME OF APPLICANT TURMS TECH LLC

1. Purpose of authorization applied for: *(Put "X" in appropriate box)*
   - [X] Construct a new station
   - [ ] Modify an existing authorization *(Specify)*

2. Facilities requested

FREQUENCY[1]	POWER[2]	NECESSARY BANDWIDTH (KHZ)	TYPE OF EMISSION[3]
Per Section 73.702	10	10	DRM--10K0G7W

[1] International Broadcast Station applicants need not specify frequency.

[2] For amplitude modulation television (AS), give maximum antenna input power during synchronizing pulses. If particulars are not fully described above, such as aural and visual carrier frequencies and power for television and type of emission, etc., supply this information as Exhibit No. --. Developmental stations using amplitude modulation or frequency modulation, give unmodulated antenna input power. For other types of emission, give a full description of method of determining power as Exhibit No. E. Describe in Exhibit No. E the means which will be used for determining and maintaining power output of the transmitter to the values specified.

[3] See Part 2 of the Commission's Rules and Regulations.

3. Proposed transmitter location

STATE	COUNTY	CITY
New Jersey	Bergen	near Alpine

Number and Street *(or other indication of location)*

U.S. Route 9W

Geographic coordinates *(to be determined to nearest second)* of the proposed antenna structure

NORTH LATITUDE	LONGITUDE
40 57' 40.38"	73 55' 23.97"

4. Attach as EXHIBIT No. E a map(s) *(topographic where obtainable, such as U.S. Geological Survey quadrangles)* for the area within 15 miles of the proposed transmitter location and show drawn thereon the following data:
   1. Proposed transmitter location—accurately plotted.
   2. Transmitter location and call signs of all known radio stations *(except amateur)* and the location of known commercial and government receiving stations within 2 miles of the proposed transmitter location.

5. Transmitting apparatus to be installed

MANUFACTURER	TYPE NO.
VTE	DRM ICON

Rated Unmodulated Carrier Power Output

10 kW

(If the above transmitter(s) is/are composite or of a type for which data has not been filed with the F.C.C., attach as EXHIBIT No. ____ a complete technical description of the transmitter(s) and auxiliary equipment with functional (block) diagrams indicating tube complements and the operating constants of the last radio stage. Include also auxiliary radio frequency equipment such as multiplexing networks, sideband filters, etc. If experimental program is likely to make major changes necessary, indicate the tentative arrangement contemplated indicating those portions which are subject to change.)

6. Transmission line proposed to supply power to the antenna from the transmitter

MAKE	TYPE NO.	DESCRIPTION
Andrew	LDF4-50A	low-density foam
SIZE IN INCHES *(nominal inside transverse dimension)*	**LENGTH IN FEET**	**Rated efficiency in percent for this length**
0.5	246	10 MHz 89% 20 MHz 84.8%

7. (a) Antenna structure

Is the proposed construction in the immediate vicinity or does it serve to modify the construction of any AM broadcast station, FM broadcast station, television broadcast station, or other class of radio station?

[ ] YES [X] NO

If "Yes", attach as EXHIBIT No. -- complete engineering data thereon.

Submit as EXHIBIT No. E a vertical plan sketch for the proposed total structure *(including supporting buildings, if any)* giving heights above ground in feet for all significant features.

Over-all height in feet above ground. *(Do not include the height of any obstruction lighting which may be required.)*	Over-all height in feet above mean sea level. *(Do not include the height of any obstruction lighting which may be required.)*
112	632

(b) Antenna data

NOTE: Applicants for international broadcasting stations should submit all pertinent data regarding antenna characteristics in accordance with the requirements of the International Telecommunication Union's Radio Regulations.

MAKE	TYPE NO. OR DESCRIPTION
SteppIR	DB36 Yagi
NUMBER OF SECTIONS	**ANTENNA POWER GAIN**
6 element Yagi	9.65 MHz--16.8 dBi 15.45 MHz--19 dBi

(c) During course of experimentation, will antenna system be changed?

[ ] YES [X] NO

If "Yes", attach EXHIBIT No. ____ the changes or modifications contemplated.

(d) Is directional antenna proposed? No Change

[X] YES [ ] NO

If "Yes", attach as EXHIBIT No. ____ complete engineering data thereon.

8. Frequency or percentage of modulation measurement.

(a) Method of measuring or monitoring station frequency.

GPS driven stability with unlock alarm
with automatic shut off

(b) Method of measuring or monitoring station modulation.

Full digital transmission monitoring
with local and remote alarms and automatic shut off

9. Environmental Statement, See Part 1, Subpart I of the rules.

Would a Commission grant of your application be a major action as defined by Section 1.1305 of the Commission's rules?

[ ] YES [X] NO

If "Yes", attach as EXHIBIT No. ____ the required statement in accordance with Section 1.1311 of the rules.

If "No", explain briefly.

EXHIBIT E

Broadcast Application | FEDERAL COMMUNICATIONS COMMISSION | Section V-G (Antenna)

ANTENNA AND SITE INFORMATION *(See Instructions B, Section 1)*

NAME OF APPLICANT: Turms Tech LLC

CALL SIGN:

CLASS OF STATION: International Broadcast

STATION LOCATION: Alpine, New Jersey

FACILITIES REQUESTED:

10 kW Transmitter Operation
into yagi antenna on mid-band frequencies 9.65 MHz;
11.85 MHz; 13.720 MHz; and 15.450 mhz

PURPOSE OF APPLICATION *(Put "X" in appropriate box)*

- [X] a. New antenna construction
- [ ] b. Alteration of existing antenna structure
- [ ] c. Change in location

LEGAL COUNSEL: JAMES FITZSIMMONS, ESQ. BUDD LARNER PC

ADDRESS: 150 JFK PARKWAY SHORT HILLS NJ 07078

CONSULTING ENGINEER: Donald G. Everist

ADDRESS: 1420 N Street, NW Suite One, Washington, DC 20005

3. Has the FAA been notified of proposed construction? (See Part 17 of FCC Rules)

- [ ] YES If yes, give date and office where notice was filed.
- [X] NO

Not required - an existing ____ feet tower for communications - is located approximately 100' distance

1. LOCATION OF ANTENNA

STATE	COUNTY	CITY OR TOWN
New Jersey	Bergen	Alpine Town

Exact antenna location *(street address)*. If outside city limits, give name of nearest town and distance and direction of antenna from the town.

Alpine Town
Dx = 0.53 mile (0.853 km)
AZ = N 42 E

Geographical coordinates *(to nearest second)*.
For directional antenna give coordinates of center of array. NAD27
For single vertical radiator give tower location.

North latitude			longitude		
40 °	51 '	40.38 "	73 °	55 '	23.47 "

2. Is the proposed site the same or immediately adjoining the transmitter-antenna site of other stations authorized by the Commission or specified in another application pending before the Commission?

[X] YES [ ] NO If yes, give call sign: WWOR-TV LP

4. FEATURES OF SURROUNDING TERRAIN

Submit as Exhibit No. E-4 a chart on which is plotted the exact location of the antenna site, and also the relative location and height of any natural formation or existing man-made structures *(trees, water tanks, towers, buildings, etc.)* which, in the opinion of the applicant, would tend to shield the antenna from aircraft. The chart used shall be a 7.5 or 15 minute series topographic quadrangle *(choice depending upon proximity of the antenna site to landing areas)* or full scale photo copy. On the chart include 1) a scale of miles, 2) sufficient latitude and longitude lines, clearly labeled, so that the location of sites may be verified, and 3) all identifying map information. These charts may be purchased from the U.S. Geological Survey, Washington, D.C. 20242 or, for areas west of the Mississippi River, from the U.S. Geological Survey, Denver, Colorado 80225.

(Exception — Where the proposed antenna site is within the boundary of landing areas, submit a self-made, large scale map showing antenna site runways and existing man-made structures.)

Proposed antenna to be located on existing tower

5. List all landing areas within 10 miles of antenna site. Give distance and direction to the nearest boundary of each landing area from the antenna site.

	Landing Area	Distance	Direction
(a)	Teterboro Airport	9.7 miles (15.602 km)	N 224 E
(b)			
(c)			

6. Description of antenna system *(If directional, give spacing and orientation of towers)*.

Type

Description of tower(s)

Self-supporting	Guyed				Tubular *(Pole)*	
Tower *(height figures should include obstruction lighting)*	#1	#2	#3	#4	#5	#6
Height of radiating elements	82					
Overall height above ground	112					
Overall height above mean sea level	632					

7. If a combination of AM, FM, or TV operation is proposed on the same multi-element array *(either existing or proposed)* submit as Exhibit No. ____ a horizontal plan for the proposed antenna system, giving heights of the elements above ground and showing their orientation and spacing in feet. Clearly indicate if any towers are existing.

8. Submit as Exhibit No. E a vertical plan sketch for the proposed total structure *(including supporting building, if any)* giving heights above ground in feet for all significant features. Clearly indicate obsing portions, noting lighting, and distinguish between the skeletal or other main supporting structure and the antenna elements.

I certify that I represent the applicant in the capacity indicated below and that I have examined the foregoing statement of technical information and that it is true to the best of my knowledge and belief.

MARCH 30, 2017 *(date)* Signature: Donald G. Everist *(check appropriate box below)*

- [ ] Technical Director
- [ ] Chief Operator
- [X] Registered Professional Engineer
- [ ] Consultant

Section VI **Equal Employment Opportunity Program**

1. Does the applicant propose to employ five or more fulltime employees? ☐ YES ☒ NO

If the answer is Yes, the applicant must include an EEO program called for in the Model EEO Program. (FCC Form 396-A)

Application for Authority to Construct or Make Changes in an International or Experimental Broadcast Station (Form FCC 309)

TURMS TECH LLC
c/o Emcor 420 Lexington Avenue #2455
New York, NY 10170

LIST OF EXHIBITS

Exhibit 1

Section II.
4.g - Is the above-described controlling corporation in turn a subsidiary?

TURMS HOLDINGS LLC is a consolidated subsidiary of Emcor Securities Inc., a New York corporation.

4.g.1 -- Is more than one fourth of the capital stock of the controlling corporation either owned of record, or may be voted by aliens, their representatives, or by a foreign government or representatives thereof, or by any corporation organized under the laws of a foreign country?

NO

4.g.2 -- Is any officer or more than one fourth or the directors of the corporation an alien?

NO

4.g.3 -- Is the above-described controlling corporation in turn a subsidiary?

NO

Exhibit 2

Section IV

1. **Outline of program plans and policies:**

Broadcast of financial, economic news and data through distribution of programs generally prepared on the basis of requests by clients

Exhibit E

Section V

Exhibit E-1 Transmitter site quadrangle map
Exhibit E-2 Transmitter site scale map
Exhibit E-3 Existing tower
Exhibit E-4 Site photograph
Exhibit E-5 Existing tower with proposed shortwave antenna
Exhibit 5-A Shortwave antenna maximum lobe orientation
Exhibit E-6 Antenna patterns & tabulation of field ratios for band center frequency & transmission line information
Exhibit E-7 Information power amplifier
Exhibit E-8 Information antenna assembly
Exhibit E-9 Information antenna assembly on proposed tower
Exhibit E-10 Predicted coverage maps
Exhibit E-11 Other broadcasting stations authorized within 5 miles of proposed operation

COHEN, DIPPELL AND EVERIST, P.C.

EXHIBIT E-1

TRANSMITTER SITE

U.S.G.S. 7.5 MINUTE QUADRANGLE MAP

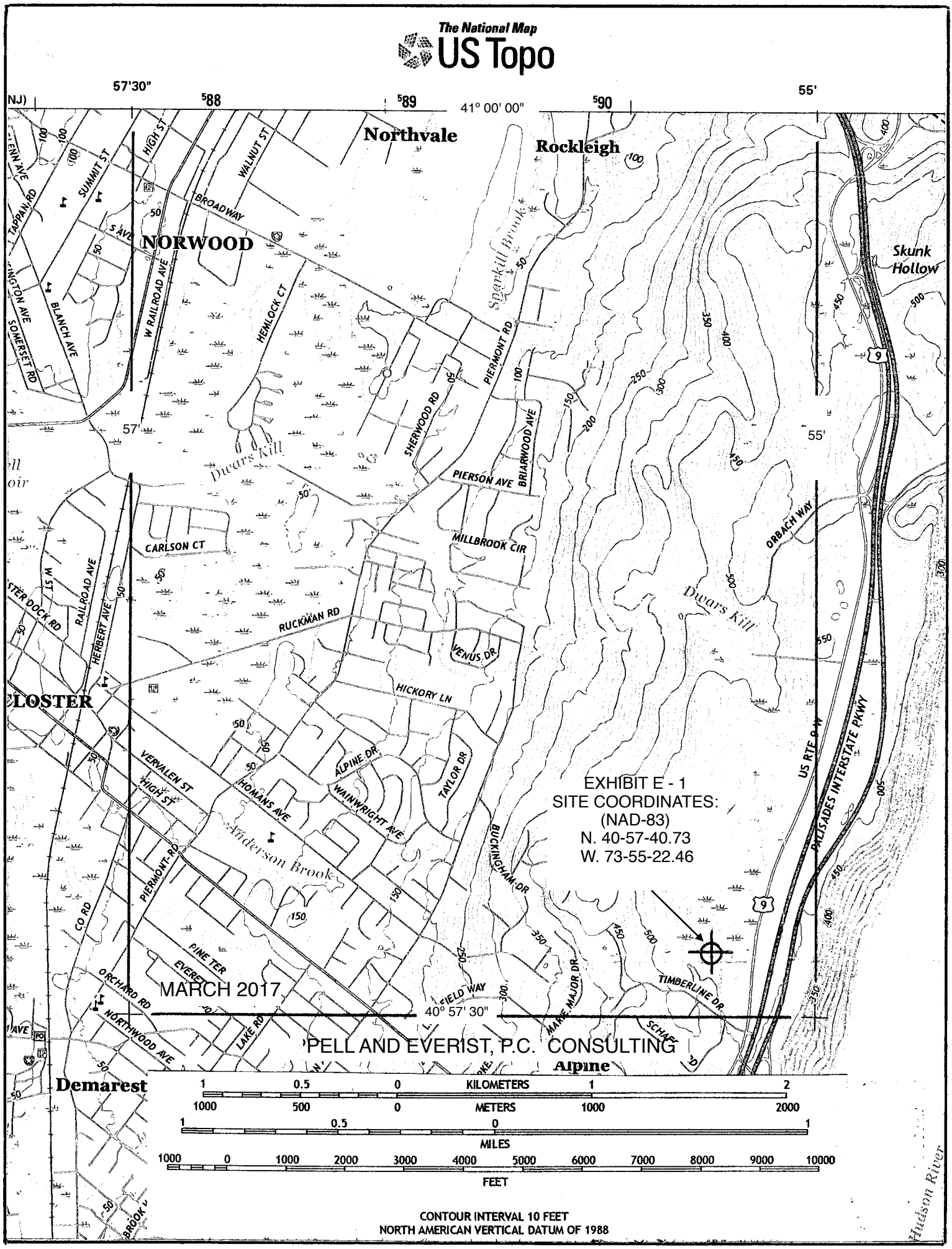
The National Map
US Topo
57'30"
41° 00' 00"
55'
Northvale
Rockleigh
NORWOOD
Skunk Hollow
Sparkill Brook
Dwars Kill
Anderson Brook
LOSTER
Demarest
Alpine
Hudson River
SUMMIT ST
HIGH ST
WALNUT ST
BROADWAY
TAPPAN RD
BLANCH AVE
SOMERSET RD
W RAILROAD AVE
HEMLOCK CT
PIERMONT RD
SHERWOOD RD
BRIARWOOD AVE
PIERSON AVE
CARLSON CT
MILLBROOK CIR
ORBACH WAY
RAILROAD AVE
HERBERT AVE
RUCKMAN RD
VENUS DR
HICKORY LN
VERVALEN ST
HOMANS AVE
ALPINE DR
WAINWRIGHT AVE
TAYLOR DR
BUCKINGHAM DR
MARE MAJOR DR
TIMBERLINE DR
US RTE 9 W
PALISADES INTERSTATE PKWY
CO RD
PINE TER
ORCHARD RD
NORTHWOOD AVE
LAKE RD
40° 57' 30"
EXHIBIT E - 1
SITE COORDINATES:
(NAD-83)
N. 40-57-40.73
W. 73-55-22.46
MARCH 2017
PELL AND EVERIST, P.C. CONSULTING
KILOMETERS
METERS
MILES
FEET
CONTOUR INTERVAL 10 FEET
NORTH AMERICAN VERTICAL DATUM OF 1988

COHEN, DIPPELL AND EVERIST, P.C.

EXHIBIT E-2

TRANSMITTER SITE

U.S.G.S. 1/250,000 SCALE MAP

EASTERN UNITED STATES 1:250,000

CONTOUR INTERVAL 50 FEET
WITH SUPPLEMENTARY CONTOURS AT 25 FOOT INTERVALS

COHEN, DIPPELL AND EVERIST, P.C.

EXHIBIT E-3

EXISTING TOWER

ABOVE MEAN SEA LEVEL

ABOVE GROUND

192.6 m (632')

34.1 m (112')

NOTE: OTHER COMMUNICATION ANTENNAS (PRINCIPALLY MICROWAVE DISHES) NOT SHOWN.

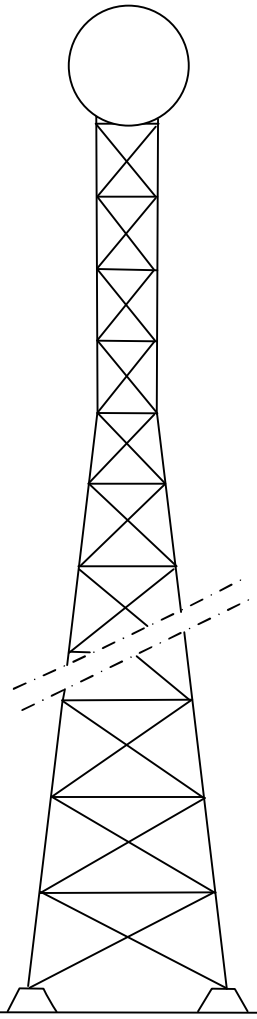

FREE-STANDING TOWER

NOT TO SCALE

158.5 m (520')

0.0 m (0')

EXHIBIT E - 3
VERTICAL SKETCH
ALPINE EXISTING TOWER
MARCH 2017

COHEN, DIPPELL and EVERIST, P.C. Consulting Engineers

COHEN, DIPPELL AND EVERIST, P.C.

EXHIBIT E-4

SITE PHOTOGRAPH

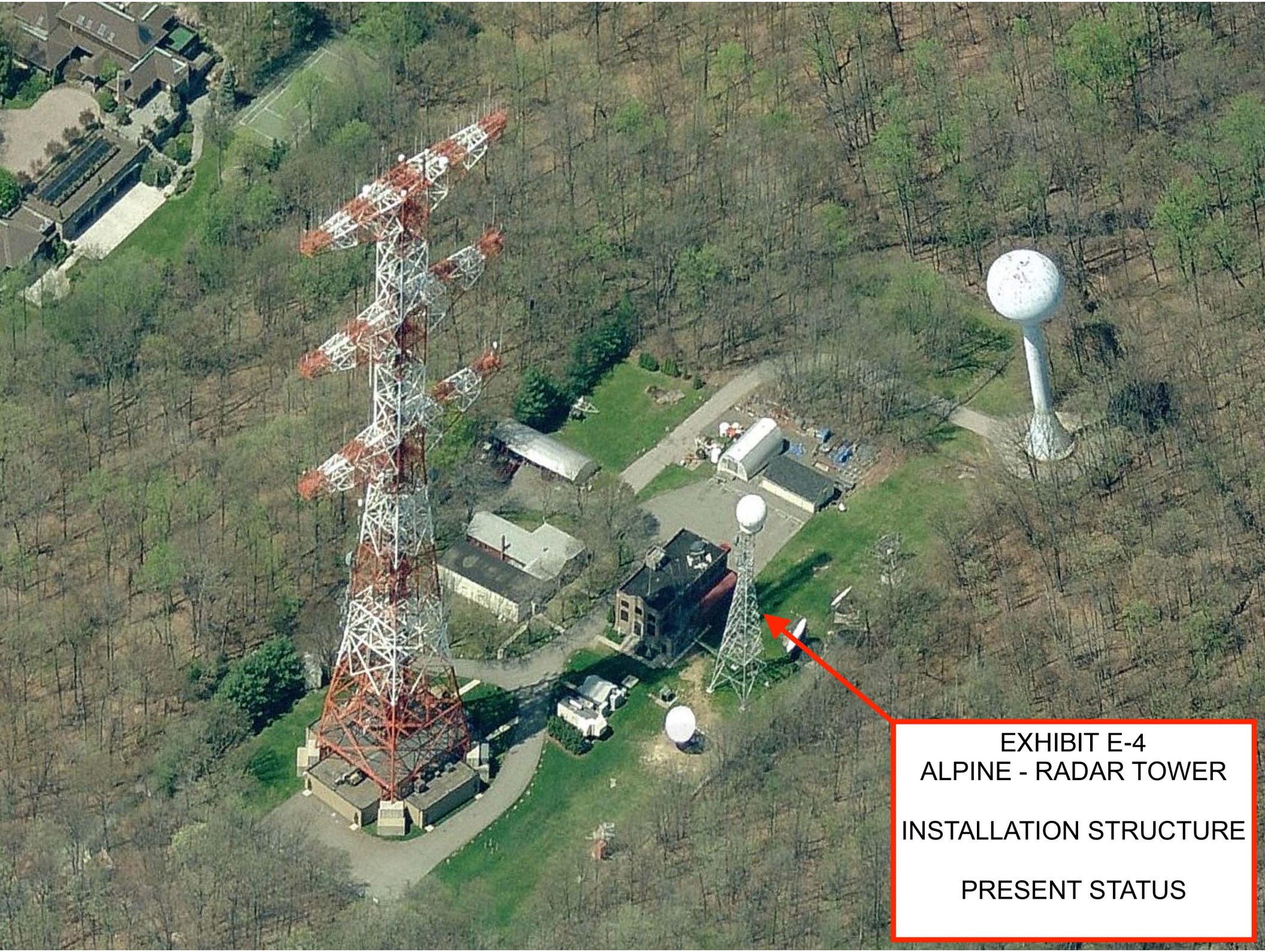

EXHIBIT E-4
ALPINE - RADAR TOWER

INSTALLATION STRUCTURE

PRESENT STATUS

COHEN, DIPPELL AND EVERIST, P.C.

EXHIBIT E-5

EXISTING TOWER

WITH PROPOSED

SHORTWAVE ANTENNA

AND

EXHIBIT E-5A

SHORTWAVE ANTENNA

MAXIMUM LOBE

ORIENTATION

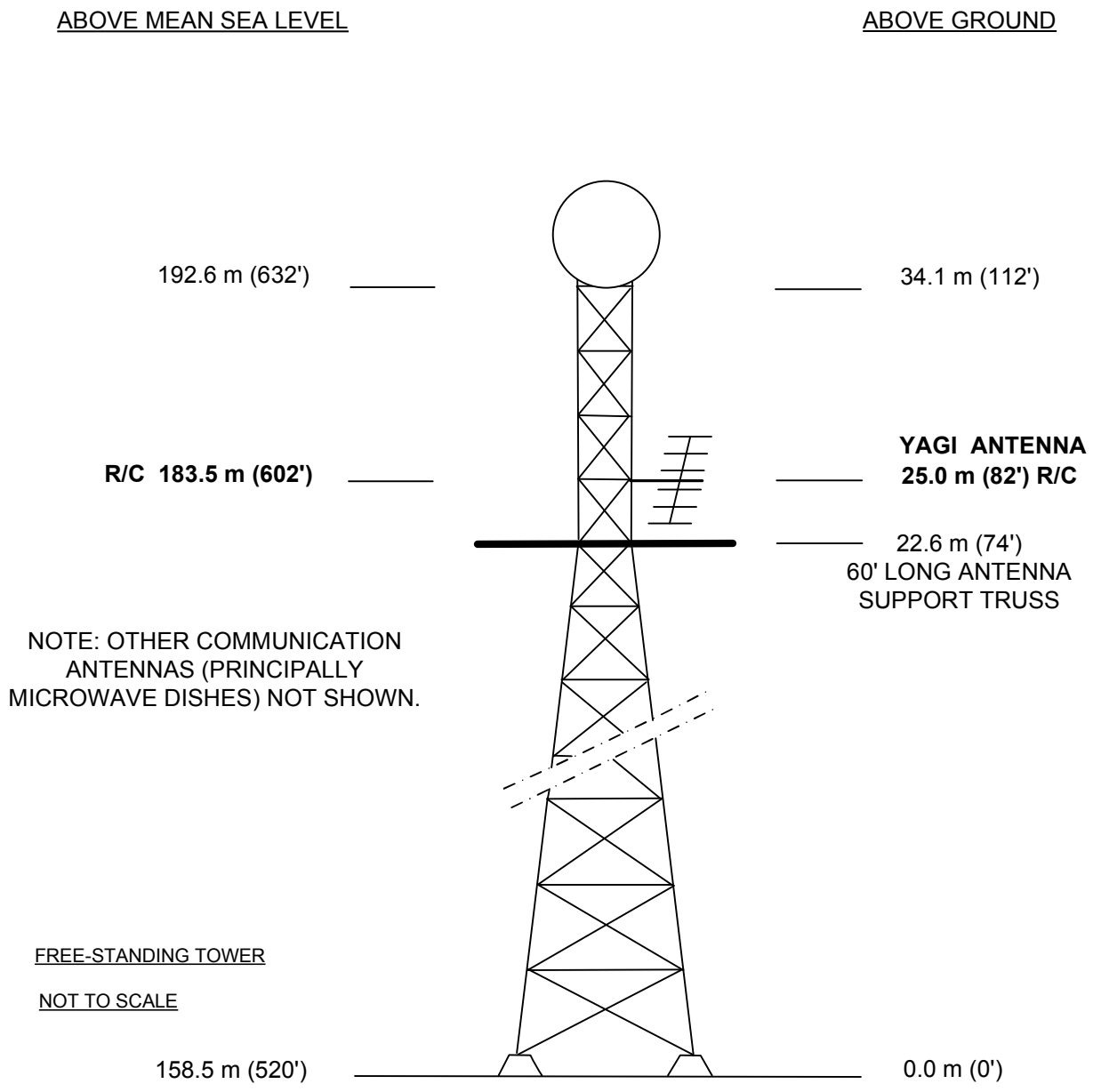

EXHIBIT E - 5
VERTICAL SKETCH
ALPINE TOWER
MARCH 2017

COHEN, DIPPELL and EVERIST, P.C. Consulting Engineers

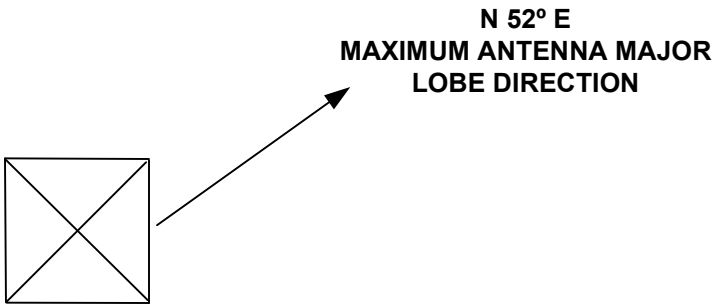

NOT TO SCALE

EXHIBIT E – 5A
MAJOR LOBE
FOR SHORT WAVE OPERATION FROM
ALPINE TOWER
MARCH 2017

COHEN, DIPPELL and EVERIST, P.C. Consulting Engineers

COHEN, DIPPELL AND EVERIST, P.C.

EXHIBIT E-6

ANTENNA PATTERNS AND

TABULATION OF FIELD RATIOS

FOR BAND CENTER FREQUENCY

9.65 MHZ

11.850 MHZ

13.720 MHZ

15.450 MHZ

AND

TRANSMISSION LINE INFORMATION

VTE HF Dynarray
Field patterns
HF Broadcast Bands

V.T.E. s.r.l.
via Salvore 20
21100 Varese VA Italy
VAT ID IT 00585150121
T +39 0332 287389
F +39 0332 830630
info@vtesrl.it www.vtesrl.it

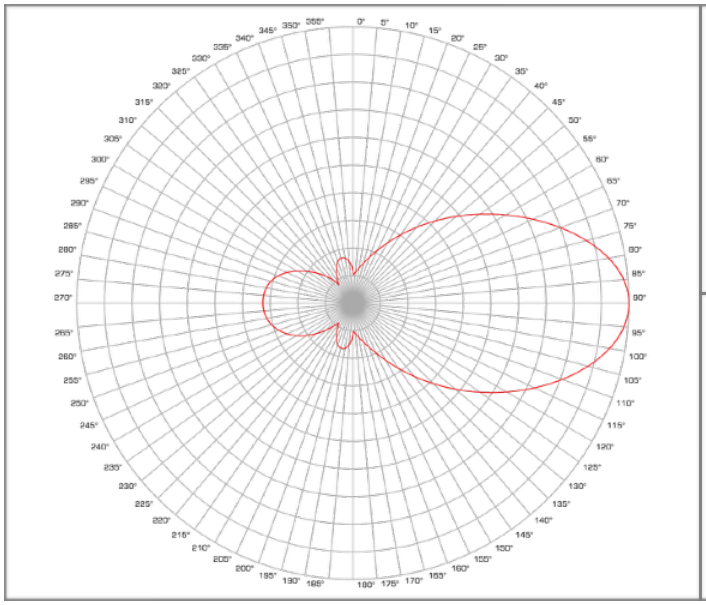

CENTRAL FREQUENCY

9.650 MHz

Calculated gain

16.8 dBi

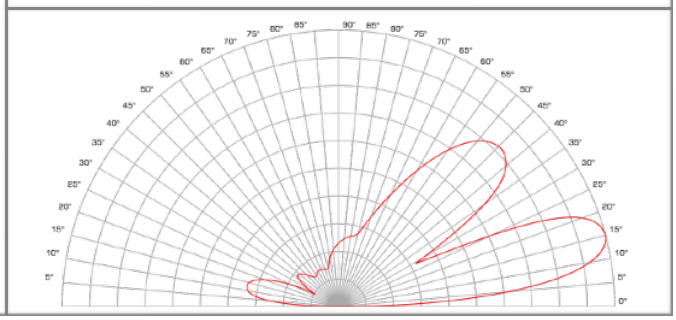

AZIMUTH							
Angle	**Field**	**Angle**	**Field**	**Angle**	**Field**	**Angle**	**Field**
0°	0,105	**90°**	1,000	**180°**	0,101	**270°**	0,325
5°	0,115	**95°**	0,984	**185°**	0,149	**275°**	0,323
10°	0,131	**100°**	0,943	**190°**	0,165	**280°**	0,318
15°	0,152	**105°**	0,881	**195°**	0,168	**285°**	0,307
20°	0,176	**110°**	0,806	**200°**	0,160	**290°**	0,288
25°	0,215	**115°**	0,724	**205°**	0,142	**295°**	0,262
30°	0,253	**120°**	0,641	**210°**	0,118	**300°**	0,233
35°	0,300	**125°**	0,560	**215°**	0,088	**305°**	0,201
40°	0,358	**130°**	0,483	**220°**	0,106	**310°**	0,168
45°	0,419	**135°**	0,412	**225°**	0,140	**315°**	0,136
50°	0,488	**140°**	0,348	**230°**	0,171	**320°**	0,105
55°	0,559	**145°**	0,284	**235°**	0,205	**325°**	0,092
60°	0,638	**150°**	0,241	**240°**	0,236	**330°**	0,120
65°	0,716	**155°**	0,201	**245°**	0,263	**335°**	0,143
70°	0,799	**160°**	0,169	**250°**	0,286	**340°**	0,161
75°	0,872	**165°**	0,145	**255°**	0,304	**345°**	0,169
80°	0,937	**170°**	0,127	**260°**	0,316	**350°**	0,165
85°	0,982	**175°**	0,114	**265°**	0,323	**355°**	0,150

ELEVATION	
Angle	**Field**
0°	0,099
5°	0,613
10°	0,921
15°	0,100
20°	0,935
25°	0,599
30°	0,328
35°	0,648
40°	0,788
45°	0,817
50°	0,778
55°	0,689
60°	0,566
65°	0,447
70°	0,345
75°	0,271
80°	0,258
85°	0,243
90°	0,288

VTE HF Dynarray
Field patterns
HF Broadcast Bands

V.T.E. s.r.l.
via Salvore 20
21100 Varese VA Italy
VAT ID IT 00585150121
T +39 0332 287389
F +39 0332 830630
info@vtesrl.it www.vtesrl.it

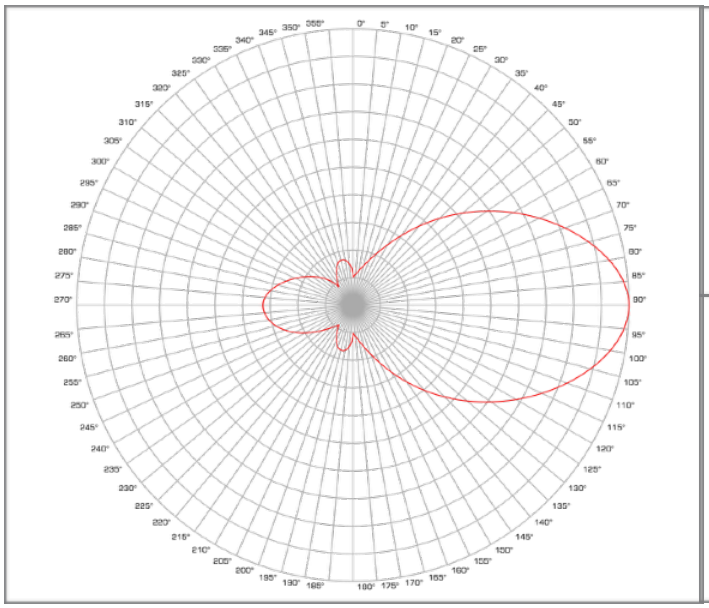

CENTRAL FREQUENCY

11.850 MHz

Calculated gain

17 dBi

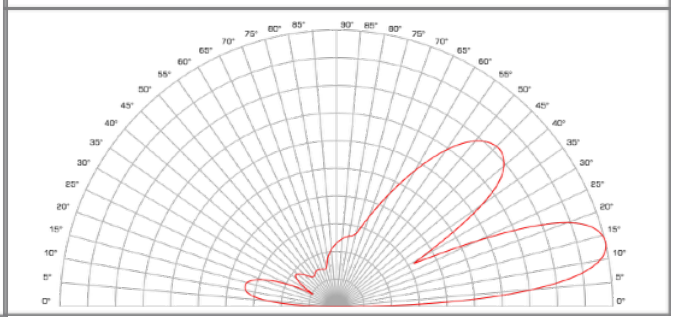

AZIMUTH							
Angle	**Field**	**Angle**	**Field**	**Angle**	**Field**	**Angle**	**Field**
0°	0,104	**90°**	1,000	**180°**	0,102	**270°**	0,324
5°	0,113	**95°**	0,982	**185°**	0,147	**275°**	0,319
10°	0,129	**100°**	0,944	**190°**	0,165	**280°**	0,302
15°	0,150	**105°**	0,887	**195°**	0,168	**285°**	0,281
20°	0,172	**110°**	0,825	**200°**	0,159	**290°**	0,255
25°	0,208	**115°**	0,753	**205°**	0,138	**295°**	0,229
30°	0,253	**120°**	0,679	**210°**	0,114	**300°**	0,204
35°	0,308	**125°**	0,609	**215°**	0,089	**305°**	0,178
40°	0,373	**130°**	0,538	**220°**	0,101	**310°**	0,154
45°	0,441	**135°**	0,465	**225°**	0,120	**315°**	0,129
50°	0,518	**140°**	0,402	**230°**	0,142	**320°**	0,096
55°	0,591	**145°**	0,337	**235°**	0,168	**325°**	0,092
60°	0,667	**150°**	0,279	**240°**	0,202	**330°**	0,119
65°	0,744	**155°**	0,230	**245°**	0,234	**335°**	0,142
70°	0,814	**160°**	0,190	**250°**	0,263	**340°**	0,161
75°	0,882	**165°**	0,155	**255°**	0,287	**345°**	0,168
80°	0,939	**170°**	0,131	**260°**	0,308	**350°**	0,165
85°	0,978	**175°**	0,115	**265°**	0,320	**355°**	0,149

ELEVATION	
Angle	**Field**
0°	0,104
5°	0,710
10°	0,965
15°	0,992
20°	0,883
25°	0,560
30°	0,360
35°	0,644
40°	0,789
45°	0,817
50°	0,779
55°	0,687
60°	0,566
65°	0,445
70°	0,344
75°	0,274
80°	0,258
85°	0,245
90°	0,229

VTE HF Dynarray
Field patterns
HF Broadcast Bands

V.T.E. s.r.l.
via Salvore 20
21100 Varese VA Italy
VAT ID IT 00585150121
T +39 0332 287389
F +39 0332 830630
info@vtesrl.it www.vtesrl.it

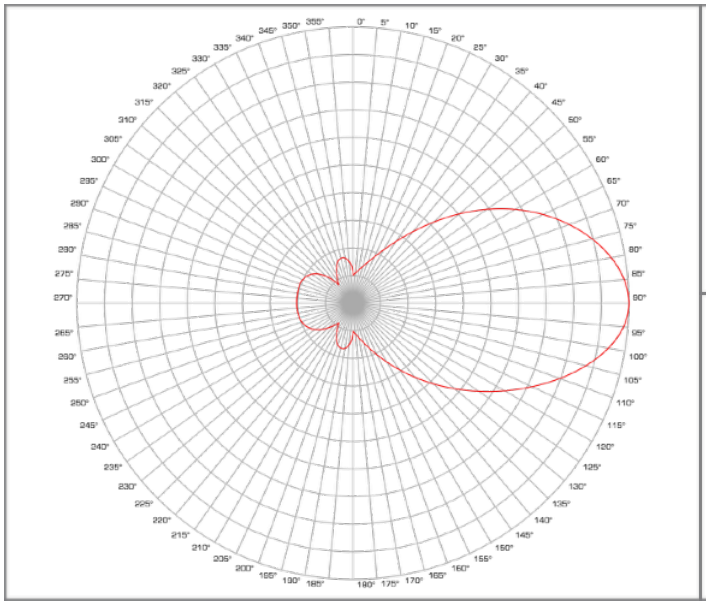

CENTRAL FREQUENCY

13.720 MHz

Calculated gain

17.5 dBi

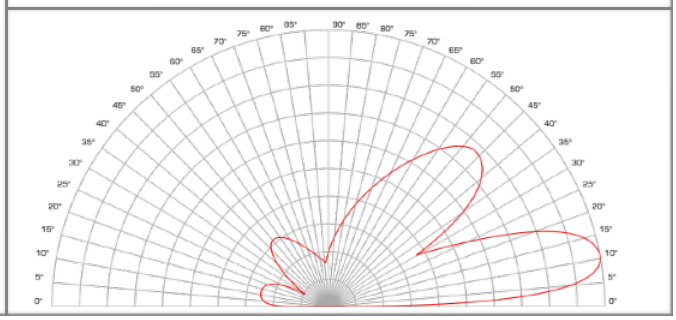

AZIMUTH							
Angle	**Field**	**Angle**	**Field**	**Angle**	**Field**	**Angle**	**Field**
0°	0,103	**90°**	1,000	**180°**	0,101	**270°**	0,205
5°	0,111	**95°**	0,980	**185°**	0,149	**275°**	0,204
10°	0,123	**100°**	0,936	**190°**	0,164	**280°**	0,203
15°	0,137	**105°**	0,871	**195°**	0,168	**285°**	0,202
20°	0,158	**110°**	0,793	**200°**	0,158	**290°**	0,199
25°	0,185	**115°**	0,712	**205°**	0,138	**295°**	0,193
30°	0,222	**120°**	0,632	**210°**	0,114	**300°**	0,183
35°	0,271	**125°**	0,551	**215°**	0,088	**305°**	0,164
40°	0,336	**130°**	0,478	**220°**	0,107	**310°**	0,138
45°	0,414	**135°**	0,411	**225°**	0,129	**315°**	0,101
50°	0,502	**140°**	0,347	**230°**	0,149	**320°**	0,093
55°	0,589	**145°**	0,291	**235°**	0,165	**325°**	0,119
60°	0,676	**150°**	0,243	**240°**	0,180	**330°**	0,143
65°	0,757	**155°**	0,205	**245°**	0,191	**335°**	0,161
70°	0,830	**160°**	0,171	**250°**	0,198	**340°**	0,169
75°	0,894	**165°**	0,147	**255°**	0,201	**345°**	0,165
80°	0,947	**170°**	0,127	**260°**	0,202	**350°**	0,148
85°	0,982	**175°**	0,112	**265°**	0,204	**355°**	0,117

ELEVATION	
Angle	**Field**
0°	0,119
5°	0,876
10°	0,994
15°	0,954
20°	0,786
25°	0,553
30°	0,377
35°	0,590
40°	0,721
45°	0,768
50°	0,754
55°	0,691
60°	0,613
65°	0,533
70°	0,454
75°	0,383
80°	0,314
85°	0,252
90°	0,197

VTE HF Dynarray
Field patterns
HF Broadcast Bands

V.T.E. s.r.l.
via Salvore 20
21100 Varese VA Italy
VAT ID IT 00585150121
T +39 0332 287389
F +39 0332 830630
info@vtesrl.it www.vtesrl.it

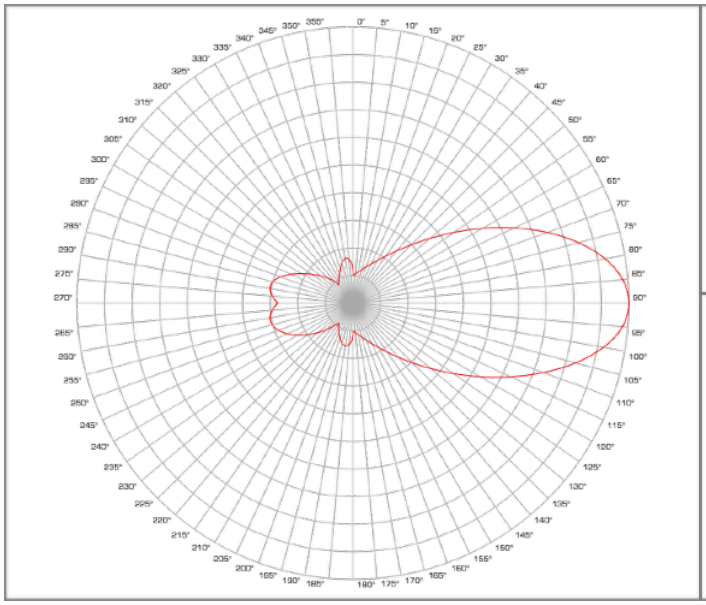

CENTRAL FREQUENCY

15.450 MHz

Calculated gain

19 dBi

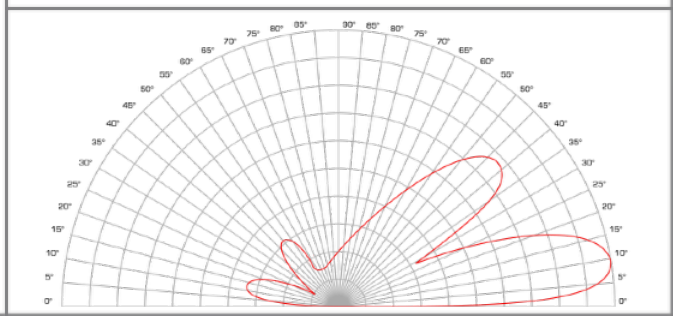

AZIMUTH							
Angle	**Field**	**Angle**	**Field**	**Angle**	**Field**	**Angle**	**Field**
0°	0,103	**90°**	1,000	**180°**	0,102	**270°**	0,274
5°	0,108	**95°**	0,978	**185°**	0,148	**275°**	0,291
10°	0,116	**100°**	0,920	**190°**	0,156	**280°**	0,305
15°	0,127	**105°**	0,832	**195°**	0,147	**285°**	0,299
20°	0,139	**110°**	0,728	**200°**	0,135	**290°**	0,277
25°	0,157	**115°**	0,626	**205°**	0,119	**295°**	0,247
30°	0,177	**120°**	0,529	**210°**	0,099	**300°**	0,212
35°	0,206	**125°**	0,442	**215°**	0,086	**305°**	0,179
40°	0,247	**130°**	0,364	**220°**	0,110	**310°**	0,152
45°	0,297	**135°**	0,304	**225°**	0,139	**315°**	0,126
50°	0,364	**140°**	0,253	**230°**	0,169	**320°**	0,102
55°	0,443	**145°**	0,213	**235°**	0,199	**325°**	0,088
60°	0,540	**150°**	0,183	**240°**	0,233	**330°**	0,104
65°	0,643	**155°**	0,159	**245°**	0,262	**335°**	0,120
70°	0,745	**160°**	0,141	**250°**	0,286	**340°**	0,136
75°	0,841	**165°**	0,127	**255°**	0,302	**345°**	0,153
80°	0,924	**170°**	0,115	**260°**	0,305	**350°**	0,163
85°	0,977	**175°**	0,107	**265°**	0,292	**355°**	0,157

ELEVATION	
Angle	**Field**
0°	0,188
5°	0,939
10°	0,994
15°	0,931
20°	0,744
25°	0,505
30°	0,356
35°	0,663
40°	0,767
45°	0,761
50°	0,690
55°	0,586
60°	0,483
65°	0,401
70°	0,335
75°	0,286
80°	0,249
85°	0,223
90°	0,198

Andrew Solutions

LDF4-50A, HELIAX® Low Density Foam Coaxial Cable, corrugated copper, 1/2 in, black PE jacket

Jacket Material	PE
Outer Conductor Material	Corrugated copper
Dielectric Material	Foam PE
Flexibility	Standard
Inner Conductor Material	Copper-clad aluminum wire
Jacket Color	Black

Nominal Size	1/2 in
Cable Weight	0.15 lb/ft | 0.22 kg/m
Diameter Over Dielectric	12.954 mm | 0.510 in
Diameter Over Jacket	15.875 mm | 0.625 in
Inner Conductor OD	4.8260 mm | 0.1900 in
Outer Conductor OD	13.970 mm | 0.550 in

Cable Impedance	50 ohm ±1 ohm
Capacitance	23.1 pF/ft | 75.8 pF/m
dc Resistance, Inner Conductor	0.450 ohms/kft | 1.480 ohms/km
dc Resistance, Outer Conductor	0.820 ohms/kft | 2.690 ohms/km
dc Test Voltage	4000 V
Inductance	0.190 µH/m | 0.058 µH/ft
Insulation Resistance	100000 Mohms•km
Jacket Spark Test Voltage (rms)	8000 V
Operating Frequency Band	1 – 8800 MHz
Peak Power	40.0 kW
Pulse Reflection	0.5%
Velocity	88%

Installation Temperature	-40 °C to +60 °C (-40 °F to +140 °F)
Operating Temperature	-55 °C to +85 °C (-67 °F to +185 °F)
Storage Temperature	-70 °C to +85 °C (-94 °F to +185 °F)

Brand	HELIAX®

Bending Moment	3.8 N-m | 2.8 ft lb
Flat Plate Crush Strength	110.0 lb/in | 2.0 kg/mm
Minimum Bend Radius, Multiple Bends	127.00 mm | 5.00 in
Minimum Bend Radius, Single Bend	50.80 mm | 2.00 in
Number of Bends, minimum	15
Number of Bends, typical	50
Tensile Strength	113 kg | 250 lb

Performance Note	Values typical, unless otherwise stated

Attenuation, Ambient Temperature	20 °C | 68 °F
Average Power, Ambient Temperature	40 °C | 104 °F
Average Power, Inner Conductor Temperature	100 °C | 212 °F

Frequency Band	VSWR	Return Loss (dB)
806–960 MHz	1.13	24.30
1700–2000 MHz	1.13	24.30

Frequency (MHz)	Attenuation (dB/100 m)	Attenuation (dB/100 ft)	Average Power (kW)
0.5	0.149	0.045	40.00
1	0.211	0.064	36.11
1.5	0.259	0.079	29.46
2	0.299	0.091	25.50
10	0.672	0.205	11.35
20	0.954	0.291	7.99
30	1.172	0.357	6.51
50	1.521	0.463	5.02
88	2.031	0.619	3.76
100	2.169	0.661	3.52
108	2.256	0.688	3.38
150	2.673	0.815	2.85
174	2.887	0.88	2.64
200	3.103	0.946	2.46
300	3.835	1.169	1.99
400	4.462	1.36	1.71
450	4.749	1.447	1.61
500	5.021	1.53	1.52
512	5.085	1.55	1.50
600	5.533	1.686	1.38
700	6.009	1.831	1.27
800	6.456	1.968	1.18
824	6.56	1.999	1.16
894	6.855	2.089	1.11
960	7.124	2.171	1.07
1000	7.284	2.22	1.05
1250	8.226	2.507	0.93
1500	9.093	2.771	0.84
1700	9.744	2.97	0.78
1800	10.058	3.066	0.76
2000	10.666	3.251	0.72
2100	10.961	3.341	0.70
2200	11.251	3.429	0.68
2300	11.535	3.516	0.66
2500	12.09	3.685	0.63
2700	12.627	3.849	0.60
3000	13.407	4.086	0.57
3400	14.401	4.389	0.53
3700	15.118	4.608	0.50
4000	15.815	4.82	0.48
5000	18.01	5.489	0.42
6000	20.055	6.113	0.38
8000	23.826	7.262	0.32
8800	25.244	7.694	0.30

** Values typical, guaranteed within 5%*

Agency	Classification
RoHS 2011/65/EU	Compliant
China RoHS SJ/T 11364-2006	Below Maximum Concentration Value (MCV)
ISO 9001:2008	Designed, manufactured and/or distributed under this quality management system

Jacket Material	t

COHEN, DIPPELL AND EVERIST, P.C.

EXHIBIT E-7

INFORMATION

POWER AMPLIFIER

DRM ICON SERIES POWER AMP

Digital Radio Mondiale HF 8-32 Kw transmitters

The ICON series HF Power Amplifiers are High Efficiency and High Linearity solid state modules designed to build very compact power amplifiers, working in the frequency range from 2 to 30 MHz.

Every single module has output power capability of 2 KW and they can be coupled to build systems with RF power from 2 to 32 KW. Air or liquid cooling are available to match the different environmental requirements, assuring a stable and reliable power system.

The system can be remotely controlled and monitored, all functional parameters are available over IP under SNMP, WEB, or SSH. VTE R&D is available to write the code required to integrate controls in your existing M&C platforms.

ICON series SSPAs are modular and can be customized to meet different configuration requirements. Power and heat management passive solutions are also available. Shown in picture is a 16 KW SSPA with passive cooling.

VTE technical department will assist the customers worldwide in choosing the right equipment configuration for complete systems, including exciters, antennas, sites configuration, and software integration.

Existing analogue short-wave, medium–wave and long-wave transmission resulted in poor sound quality because of static interferences and fading. As the listeners tolerance for AM noise decreased in recent years, it was obvious that something has to be done to revitalize broadcasting below 30MHz. In 1998. a small group of pioneering broadcasters and manufacturers joined forces to create a universal digital system for AM broadcasting below 30 MHz, i.e. short wave, medium wave and long wave. The idea was to create a non-proprietary, evolutionary, global standard which would be market driven and consumer oriented and capable of spreading the AM digital technology around the world. As a result the DRM (Digital Radio Mondiale) organization was established on March 5th 1998.

Recognizing its importance, VTE has started developing advanced solutions to deploy DRM equipment capable of efficient data-casting, with particular attention to extremely efficient and compact RF power amplifiers with low deployment and maintenance cost.

The ICON series DRM transmitter is the result of years of experience, delivering digital data broadcast to the DRM world.

DRM ICON SERIES POWER AMP

Digital Radio Mondiale HF 8-32 Kw transmitters

V.T.E. s.r.l.

21100 Varese VA Italia **T** +39 0332 287389 **F** +39 0332 830630

info@vtesrl.it www.vtesrl.it

COHEN, DIPPELL AND EVERIST, P.C.

EXHIBIT E-8

INFORMATION

ANTENNA ASSEMBLY

DB36 Yagi
Assembly Manual

This assembly manual is intended to be printed in full COLOR. If the manual is printed in black and white, many important details could be lost.

REV 10.8
03/26/2015

2112 116th Ave NE #1-5, Bellevue, WA 98004 l Tel: 425.453.1910 l email: sales@steppir.com

DB36 Yagi Specifications

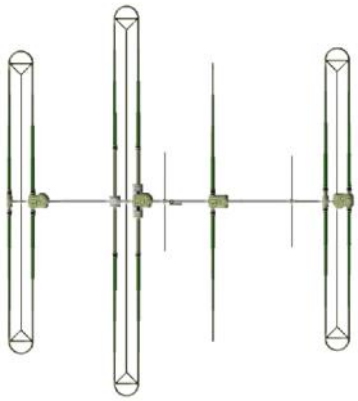

Specifications	DB36 Element Yagi
Boom length	36 ft / 11.1 m
Boom outside diameter	1.75 in—2.50 in / 4.45 cm—6.35 cm
Longest element	49 ft / 14.94 m
Turning radius	26 ft / 8.0 m
Weight	160 lb / 72.8 kg
Wind load	17.5 sq ft / 1.63 sq m
Wind rating	100 mph
Adjustable elements	4
Power Rating	3000 watts continuous
Feed points	1
Frequency coverage	6.95—54 MHz (3.5-4, 5.3 MHz, & 6.95—54 MHz w/ opt. 80m dipole)
Control cable	16 conductor shielded, 22 AWG 80m option—24 conductor

Frequency	DB36 Gain, dBi	DB36 Front to rear, dB
80M* (optional)	1.35	NA
40M	7.2	21
30M	8.2	18
20M	9.27	21.5
17M	9.88	26.5
15M	10.21	27.1
12M	10.43	21.1
10M	10.65	11.0
6M	4	1.78
6M w/passive opt.	12.75	27.4

Tech Support: www.steppir.com/support ● Tel: 425.891.6134 ● support@steppir.com

SteppIR™

DB36 TABLE OF CONTENTS (page 1 of 4)	Page(s)
PREAMBLE	**2—18**
A note from Mike Mertel, K7IR	6
What now? Advice from Jim Streible K4DLI	7—8
Parts check list	9—10
Bill of materials (BOM) - Individual kits	11—15
A word about stainless steel galling	16
Assembly notes	17
DB36 Element configuration	18
CHAPTER ONE	
SECTION 1.0	
Boom assembly	19—21
CHAPTER TWO	**22—26**
SECTION 2.0	
Element housing unit placement	22
EHU center-to-center spacing measurements	23
SECTION 2.1	
A look inside the EHU	24
EHU wiring	25—26
CHAPTER THREE	**27—39**
SECTION 3.0	
Driven element & return tube assembly	27
Attach the element mounting plate to boom	28—29
SECTION 3.1	
Prepare the element support tubes (EST's) for mounting	30—31
SECTION 3.2	
Attach the EST's to the mounting plate	32
SECTION 3.3	
Secure the Driven element EHU to the mounting plate	33—34
SECTION 3.4	
Installing the CPVC inner guide tubes	35—36
SECTION 3.5	
Return tube assembly—Driven Element	37—39

DB36 TABLE OF CONTENTS (page 2 of 4)	Page(s)
CHAPTER FOUR	**40—42**
SECTION 4.0	
Reflector EHU overview drawing	40
Return tube assembly—Reflector	41
SECTION 4.1	
Mounting the Reflector EHU onto the boom	42
CHAPTER FIVE	43—44
SECTION 5.0	
Director 1 EHU overview drawing	43
Mount Director 1 EHU onto the boom	44
CHAPTER SIX	**46—47**
SECTION 6.0	
Director 2 EHU overview drawing	45
Mount Director 2 EHU onto the boom	46
SECTION 6.1	
Return tube assembly—Director 2	47
CHAPTER SEVEN	**48—50**
SECTION 7.0	
Mast plate assembly overview	48
Attach the mast plate to the boom	49—50
CHAPTER EIGHT	**51—54**
SECTION 8.0	
Attach the boom truss mast to the mast plate	51
SECTION 8.1	
Phillystran truss	52—53
SECTION 8.2	
Attach the Phillystran truss to the boom truss mast	54
CHAPTER NINE	**55—61**
SECTION 9.0	
Mount the connector junction box onto the truss boom	55
SECTION 9.1	
Wiring the connector junction box	56—58
SECTION 9.2	
Optional 80m dipole wiring schematic	
Connecting the control cable to the 25 pin dSUB splice	60—61

SteppIR™

DB36 TABLE OF CONTENTS (page 3 of 4)	Page(s)
CHAPTER TEN	**62—65**
SECTION 10.0	
Prepare the telescoping poles for the loop and non-loop elements	62—63
SECTION 10.1	
Attach the sweep couplers to the sweep tubes, mount the fiberglass spreaders	64—65
SECTION 10.2	
Attach the telescoping fiberglass poles to the sweeps	66
CHAPTER ELEVEN	**67—69**
SECTION 11.0	
Prepare the CPVC inner guide tube and diverter cone	67
SECTION 11.1	
Secure the element support tube (EST) to the EHU	68—69
CHAPTER TWELVE	**70—73**
SECTION 12.0	
Installing the truss support mast	70
SECTION 12.1	
Attach the truss couplers	71
SECTION 12.2	
Routing the Dacron truss cord	72—73
CHAPTER THIRTEEN	**74—75**
SECTION 13.0	
OPTIONAL 6m passive element kit	74—75
CHAPTER FOURTEEN	76—78
SECTION 14.0	
Secure the cables onto the boom	76
SECTION 14.1	
Mount the DB36 onto the tower mast	77—78
CHAPTER FIFTEEN	**79—82**
SECTION 15.0	
Troubleshooting the DB36 Yagi	79—80
Warranty information	81
SteppIR contact information	82

SteppIR - Why Compromise?

The SteppIR antenna was originally conceived to solve the problem of covering the six ham bands (20m, 17m, 15m, 12m, 10m and 6m) on one tower without the performance sacrifices caused by interaction between all of the required antennas.

Yagi's are available that cover 40 meters through 10 meters by using interlaced elements or traps or log periodic techniques, but do so at the expense of significant performance reduction in gain and front to back ratios. With the addition of the WARC bands on 30m, 17m and 12m, the use of interlaced elements and traps has clearly been an exercise in diminishing returns.

Obviously, an antenna that is precisely adjustable in length while in the air would solve the frequency problem, and in addition would have vastly improved performance over existing fixed length Yagi's. The ability to tune the antenna to a specific frequency, without regard for bandwidth, results in excellent gain and front to back at every frequency.

The patented folded dipole loop elements on the DB36 allow for outstanding performance on 40m and 30m with element lengths that are 40% shorter than a full sized Yagi—at the expense of only 0.3dB of gain!

The SteppIR design was made possible by the convergence of determination and high tech materials. The availability of new lightweight glass fiber composites, Teflon blended thermoplastics, high conductivity copper-beryllium and extremely reliable stepper motors has allowed the SteppIR to be a commercially feasible product.

The current and future SteppIR products should produce the most potent single tower antenna systems ever seen in Amateur Radio! We thank you for using our SteppIR antenna for your ham radio endeavors.

Warm Regards,

Mike Mertel

Michael (Mike) Mertel - K7IR
President

PREAMBLE

OK - - - NOW WHAT?

(Sage advise from Jim Streible, K4DLI—SteppIR Technical Support Guru)

You have ordered you SteppIR Antenna and are waiting for delivery. What do you do in the meantime?

1. Go to the SteppIR web site at www.steppir.com and download the latest manual for your antenna, and also the Operators Manual for the controller.
2. Read the manuals from cover-to-cover ---TWICE! Don't just read them –Study them, so you are familiar the terminology used about the antennas and have a good idea of how the antenna is assembled and where the various parts go.
3. As you go through the manuals make notes of any instructions you may not clearly understand, then call or email for clarifications. It is better to have it all sorted out before you start assembly. We don't mind answering your questions beforehand.
4. Now, wait for notification your antenna is being shipped.

Your antenna has arrived!
What is the first thing to do?

1. If the antennas is to arrive on Wednesday----DO NOT plan an antenna party for Saturday
2. Even if you plan to install the antenna weeks later, the first thing to do is to unpack the antenna and do a complete inspection. Make sure nothing is missing or has been damaged in shipment.
3. Do a complete inventory of every part, nut and bolt. Yes it takes time, but it also allows you to notify SteppIR if anything is missing and allow time to get it to you before you start assembly of the antenna. There is nothing more frustrating than realizing that something is missing, just hours before you want to install the antenna.
4. Go back to the SteppIR website and download the latest manual. SteppIR constantly is improving and adding to the manual, so even though your paper instruction manual is going to have all the data you need, it makes sense to check for the latest updates online. This is especially true If you purchased the antenna and a period of time has passed between arrival and install dates.
5. Take the controller and power supply out of their wrappings and connect them. The controller does not have to be connected to the antenna in order to familiarize yourself with it. In fact, it is best to get familiar with the controller when it is not connected to the antenna. Turn on the controller and read through the Operators Manual again while operating the controller in all it modes. Go through the menus so you know what each does and how to navigate through the various menus and functions.

OK - - - NOW WHAT? (continued)
(Sage advise from Jim Streible, K4DLI—SteppIR Technical Support Guru)

6. When you have finished working with the controller be sure the display indicates "Elements Home" and the controller has been turned OFF. When the controller is connected to the antenna and the controller is turned back on the next time, it will immediately tune to whatever position the controller was left in last time you were using it, so you want to be sure that position is HOME.
7. Once the antenna is completely assembled and ready to mount on the antenna tower, use an antenna analyzer, if you have one, to test resonance of the antenna.. If you don't have an analyzer, try to borrow one. It will save you a lot of time and worry. Check the antenna on each band for some sign of resonance within the frequency range. Leave the antenna on the default frequency and tune the analyzer to see where the dip occurs. It will be somewhere below the lower band edge on each band with the antenna 3 or 4 feet above the ground on sawhorses. Also, don't expect to see a 1:1 SWR here, just look for a good indication of resonance.

   Once it has been determined this part of the antenna is working correctly do the following: Select the lowest band and establish the dip condition by tuning the analyzer. Do not touch the analyzer again. Retract the elements and then reselect the same band. The antenna should come back to very near the same setting. Do this 2 or 3 times on each band. Also, try going from the band being tested to any other band and back again and observe that the antenna comes back to the same resonant point. Now you know the antenna is tuning correctly from band to band and is consistent.

Enjoy the antenna!

73

Jim Streible—K4DLI

PREAMBLE

DB36 PARTS CHECKLIST

It is important that you do an inventory of the items that were shipped to you. Nothing is worse than discovering a day before a planned installation that there are missing parts! We do our very best to ensure that you receive everything needed for construction of your antenna, but better to be safe than sorry—inventory your parts well in advance of your installation. The items in blue represent options available for the DB36E Yagi—you will need to check these items off only if you purchased them.

✓	QTY	PART NUMBER	DESCRIPTION
	1	70-3405-01	30/40m Driven EHU
	1	10-1501-23	Lid with drain hole (Driven element)
	1	70-3420-01	20m Passive EHU
	2	70-3422-01	30/40m Passive EHU w/ terminal lug
	4	10-1502-12	EHU Gasket
	1	71-0007	DB36 Instruction manual
	1	71-0010	SDA 100 Instruction manual
	1	NA	SDA100 Controller
	1	20-8033-01	Power supply 24V external
	1	21-5003-01	16 Wire control cable_____ FT
			SDA100 OPTIONS:
	1	01321	*Transceiver interface
	1	01322	*Tuning relay
	1	01323	Advanced lightning protection (ALP)
	1	01324	Remote driver board
	1	20-8030-02	Power Supply 33V external
			Voltage Suppressor (lighting arrestor) OPTION
	1	20-8052-51	16 pin voltage suppressor
	1	20-8052-41	8 pin voltage suppressor
	1	70-6010-01	25 pin dSub splice assembly

ANTENNA COMPONENTS

✓	QTY	PART NUMBER	DESCRIPTION
	2	10-1610-23	11.5" x 11.5" x 0.25" Mast Plate
	3	70-2030-11	EHU mounting plate with aligning gasket
	3	10-1608-01	Return Plate
	1	10-1605-11	Driven Element Plate

ANTENNA COMPONENTS (continued) - DB 36 PARTS CHECK LIST

✓	QTY	PART NUMBER	DESCRIPTION
	6	10-1156-01	Poly sweep (160 psi)
	6	10-1503-21	Black fiberglass rod 31.75″
	3	72-0030-61	Sweep Hardware Kit
	2	10-1015-11	12″ Return EST
	14	60-1006-22	Fernco 1.5″ x 1.25″ quick disconnect boot
	42	10-1059-01	Polyolefin heat shrink 1.5″ x 3″
	1	NA	65' 4 Conductor cable w/ 32″ coax seal
	1	21-8002	30' 2100I Phillystran
	1	21-7002-01	95' of 3/16″ Dacron rope
	1	03322	16 Conductor control cable Length _____
	2	10-1202-01	1-3/4″ x 72″ Boom section **PN is not marked on boom*
	2	10-1202-21	2-1/4″ x 48 Boom section **PN is not marked on boom*
	2	10-1202-11	2″ x 72″ Boom section **PN is not marked on boom*
	1	10-1202-32	2-1/2″ x 72″ Boom section **PN is not marked on boom*
	1	10-1618-41	1-3/4″ x 48″ Boom truss support mast
	2	70-2029-01	60 3/4″ EST with ring
	2	70-2028-01	66 3/8″ EST with ring
	1	10-1630-21	2″ x 12″ Slotted aluminum sleeve
	4	10-1630-11	2″ x 3″ Slotted aluminum sleeve
	2	70-2025-33	64″ CPVC w/foam sealing ring and rubber coupler
	6	70-2025-23	39 7/8″ CPVC inner guide tube
	6	70-2025-13	49″ CPVC inner guide tube w/coupler
	1	10-1054-02	36″ Truss support arm
	2	10-1203-21	2″ x 10″ Boom reinforcement splice

ANTENNA KITS

✓	QTY	PART NUMBER	DESCRIPTION
	1	72-0100	DB36 Hardware Box
	1	72-0102	DB36 Saddle Box
	1	72-0104	DB36 Misc Parts Box
	2	72-0018-31	OPTION: 39' Element truss kit
	2	10-1054-02	OPTION: 36″ Truss support for end element truss kit
	2	72-1002	OPTION: DB 36 6m Hardware Kit
	2	10-1001-91	OPTION: Tubing kit for optional 6m passive element kit
	1		OPTION: 80M Dipole kit

DB36 Hardware Box Bill of Materials
(PN 72-0100)

✓	QTY	PART NUMBER	DESCRIPTION
	16	60-0014-01	6-32 x 7/8” SS Pan Head Screw
	16	60-0014	6-32 SS Nylock Nut
	25	60-0112	10-32 x 1/4” Set Screw
	4	60-0113	10-32 x 5/8” Pan Head Screw
	34	60-0017	10-32 x 3/4” SS Screw
	2	60-0017-10	10-32 x 3/4” SS Flat Head Screw
	4	60-0101	10-32 x 3/4” Pan Head Screw w/ Nylon Patch
	40	60-0018	#10 SS Washer
	36	60-0019	10-32 SS Nylock Nut
	1	60-0110	1/4” - 20 x 1-1/4” SS Bolt
	4	60-0029	1/4” - 20 x 3” SS Bolt
	4	60-0063	1/4” - 20 x 3-1/4” SS Bolt
	4	60-0100	1/4” - 20 x 3-1/2” SS Bolt
	60	60-0041	1/4” SS Washer
	13	60-0030	1/4” SS Nylock Nut
	1	60-0103	5/16” x 3” SS Bolt
	36	60-0065	5/16” x 3-1/2” SS Bolt
	18	60-0114	5/16” x 3-3/4” SS Bolt
	8	60-0066	5/16” x 4” SS Bolt
	8	60-0115	5/16” x 4-1/2” SS Bolt
	70	60-0046	5/16” SS Nylock Nut
	4	60-0033	5/16” SS Washer
	1	60-0145	3/8” x 4-1/2” SS Eyebolt
	7	60-0034	3/8” SS Washer
	1	60-0050	3/8” SS Nylock Nut

DB36 HARDWARE BOX BILL OF MATERIALS (continued) (PN 72-0100)

✓	QTY	PART NUMBER	DESCRIPTION
	1	60-0142	7/16″ x 5″ SS Bolt, Full Thread
	1	60-0143	7/16″ SS Nylock Nut
	2	60-0160	7/16″ SS Lock Washer
	2	60-0161	7/16″ SS Standard Nut
	4	60-0144	7/16″ Galvanized Washer
	4	60-0157	1/8″ Wire Clamp
	2	60-0158	1/8″ Thimble
	16	60-0045	3/16″ Wire Clips
	4	60-0048	3/16″ Wire Thimble
	4	10-1613-01	1″ Alum Spacer
	12	10-1613-11	1/4″ Aluminum Spacer
	2	60-6000-15	SS Hose Clamp #016
	2	60-0083	1/4″ x 4″ SS Turnbuckle
	2	60-0159	5/16″ x 8″ SS Turnbuckle
	2	10-1606-01	Element Support Reinforcement Plate
	2	10-1607-11	Truss Attachment Plate

DB36 SADDLE BOX BILL OF MATERIALS (PN 72-0102)

✓	QTY	PART NUMBER	DESCRIPTION
	28	10-1601-03	1-3/4″ Aluminum saddle half
	28	10-1601-22	2″ Aluminum saddle half
	10	10-1601-32	2-1/4″ Aluminum saddle half
	4	10-1601-41	2-1/2″ Aluminum saddle half

DB36 MISC. PARTS BOX BILL OF MATERIALS (PN 72-0104)

✓	QTY	PART NUMBER	DESCRIPTION
	2	72-0009-03	Glue Kit
	2	70-1007-01	Foam Plug Assembly
	1	09-0007	Blue Silicone Tape
	1	09-1025	Conical Grinding Stone 11/16”
	2	09-0001	Electrical Tape
	1	10-1028-21	Anti-seize Stick
	1	10-1029-01	Connector Protector
	4	10-1509-02	Diverter Cone for CPVC inner guide
	8	10-1510-01	Element Truss Clamps (halves)
	4	60-0044-00	Phillystran Cap, black

DB36 OPTIONAL 6M PASSIVE ELEMENT KIT (PN 72-1002)

✓	QTY	PART NUMBER	DESCRIPTION
	2	10-1019-31	Mounting Plate
	4	60-0001	1” U-bolt
	8	60-0030	1/4” Nylock Nut
	4	60-6000-60	1/2” SS Hose Clamp
	2	10-1601-03	1.75” Aluminum Saddle
	2	10-1601-41	2.5” Aluminum Saddle
	2	60-0075	5/16” X 3-1/4” SS Bolt
	2	60-0066	5/16” X 4” SS Bolt
	4	60-0046	5/16” Nylock Nut

DB36 OPTIONAL END ELEMENT TRUSS KIT

OPTIONAL END ELEMENT TRUSS KIT (PN 72-0018-31)

✓	QTY	PART NUMBER	DESCRIPTION
	1	10-1054-02	36″ TRUSS SUPPORT ARM
	2	10-1601-03	1-3/4″ ALUMINUM SADDLE HALF
	8	10-1510-01	ELEMENT TRUSS CLAMP HALF
	2	60-0083	4″ STAINLESS TURNBUCKLE
	1	60-0110	1/4″ x 1-1/4″ HEX HEAD BOLT
	1	60-0030	1/4″ NYLOCK NUT
	2	60-0065	5/16″ x 3-1/2″ HEX HEAD BOLT
	2	60-0046	5/16″ NYLOCK NUT
	2	60-0033	5/16″ FLAT WASHER
	1	21-7001-01	75 FT 1/8″ DACRON ROPE
	16	60-0014	6-32 NYLOCK NUT
	16	60-0014-01	6-32 x 7/8″ PAN HEAD SCREW
	2	60-0158	1/8″ THIMBLE
	4	60-0157	1/8″ WIRE CLAMP
	1	10-1028-01	ANTI SEIZE PACKET
	1	09-0001	ELECTRICAL TAPE
	1	60-0112	SET SCREW

DB36 OPTIONAL 80M DIPOLE KIT

OPTIONAL 80M DIPOLE KIT (PN 72-0028-01 AND 72-0028-11)

✓	QTY	PART NUMBER	DESCRIPTION
	1	70-3003-01	80M BALUN/SWITCH BOX (not in kit bag)
		Following Bagged in a Kit:	
	2	70-2040-01	80m Dipole 25 ft element assembly
	2	21-7002-01	25 ft 3/16″ DACRON ROPE
	2	60-0066	5/16″ x 4″ SS HEX BOLT
	2	60-0114	5/16″ X 3 3/4″ SS BOLT
	2	60-0075	5/16″ X 3 1/4″ SS BOLT
	4	60-0046	5/16″ NYLOK NUT
	2	10-1601-03	1 3/4″ ALUM SADDLE
	2	60-0028	1/4″ X 2 1/4″ SS BOLT
	2	60-0030	1/4″ X 20 NYLOK NUT
	2	60-0116	1/4″ X 20 REGULAR NUT
	2	60-0034	3/8″ SS WASHER
	2	60-0094	3/16″ SS QUICK LINK
	2	60-0037-21	4″ X 5/16″ GALVANIZED EYEBOLT
	4	60-0033	5/16″ SS WASHER
	2	10-1613-01	1″ ALUMINUM SPACER
	3	10-1607-11	TRUSS ATTACHMENT PLATE
	1	21-6301-60	6' COAX JUMPER CABLE
	1	21-5001-01	3' 4 CONDUCTOR 22 GA CABLE
	1	09-0001	ELECTRICAL TAPE 66' X 3/4″
	1	10-1029-01	CONNECTOR PROTECTOR
	1	60-0117	CABLE CLIP WITH ADHESIVE BACK
	1	60-0112	10-32 X 1/4″ SET SCREW
		With 80m dipole option customer needs end element truss kits	
	2	10-1054-02	36″ Element Truss Supports
	2	72-0018-31	39' Element Truss Kit

PREAMBLE

A WORD ABOUT STAINLESS STEEL GALLING

From time to time, we get complaints from customers regarding galling of stainless steel fasteners.

Here is an excerpt from the Industrial Fastener Institute's Standards Book:

Thread galling seems to be the most prevalent with fasteners made of stainless steel, aluminum, titanium and other alloys which self-generate an oxide surface film for corrosion protection. During fastener tightening, as pressure builds between the contacting and sliding thread surfaces, protective oxides are broken, possibly wiped off and interface metal high points shear or lock together. This cumulative clogging-shearing-locking action causes increasing adhesion. In the extreme, galling leads to seizing - the actual freezing together of the threads. If tightening is continued, the fastener can be twisted off or its threads ripped out.

During minor galling, the fastener can still be removed, but in severe cases of galling, a strong bond between the bolt and nut can prevent removal of fasteners. Unfortunately, little is known on how to control it, but here are two ways to minimize this effect:

Decreasing installation RPM speed will cause less friction and decrease heat generation. Lubrication used prior to assembly can dramatically reduce or eliminate galling. Recommended lubricants should contain higher amounts of molybdenum disulfide, such as graphite which is very commonly used as a solid lubricant or special anti-galling lubricants sold by chemical companies.

We provide an anti-seize compound stick called "Thread Magic" (shown in picture below) with all of our antennas and **strongly encourage** you to use it to reduce the aggravation of galling. The Thread Magic stick is fantastic—you can get plenty of anti-seize on the fastener without getting it on your hands!

Contrary to popular belief, galling of stainless steel is not a symptom of a "cheap" fastener - it is prevalent in all types of stainless steel, aluminum and titanium fasteners. You can be assured that the stainless steel fasteners we provide with our products are manufactured of very high quality.

PREAMBLE

ASSEMBLY NOTES

Before beginning assembly of this antenna, please read the manual in it's entirety to familiarize yourself with the task at hand. Doing so will eliminate potential confusion.

Be sure to do an inventory of your parts as soon as possible after receipt of the antenna, and well before your intended installation date - this way we can get you the parts required before it's too late.

When doing inventory on the parts, we recommend you divide the items needed for each of the separate steps. It will make handling and organization of the parts a much easier task!

A large, cleared flat area is recommended for assembly of an antenna of this size and complexity. Typically, an area 40 ft x 50 ft would be ideal. We recommend using sawhorses or sturdy tables when installing the boom. By having the boom elevated, it is easier to ensure that the elements are level. Rubber or Nitrile gloves are recommended when applying the anti-seize to the stainless steel fasteners or the aluminum boom sections.

If you do not have room near the tower to assemble the antenna, we suggest you find a place that you can put the antenna together in it's entirety and then disassemble as needed for transportation to the tower area.

Be sure to refer to the DB36 configuration drawing on the following page so that you can fully understand how the antenna operates. In addition, the configuration drawing identifies EHU placement, which is important as you progress in your installation of the antenna.

Use of a level for adjusting the Element Housing Units (EHU's) is highly recommended. This is a surprisingly accurate and consistent method. Simply place the level on the mast plate, and adjust each element accordingly.

Be sure to use the anti-seize compound supplied to prevent the galling of the stainless steel fasteners. If you do not use the anti-seize, count on issues with the hardware galling. Heat is one of the primary culprits with galling, so if you use a ratchet, steady speed as you tighten will help minimize galling. We have found that when the anti-seize is applied to the bolt portion of the hardware, it will eliminate any galling issues.

PREAMBLE

DB 36 ELEMENT CONFIGURATION GUIDE

REVERSE DIRECTION (180 deg)

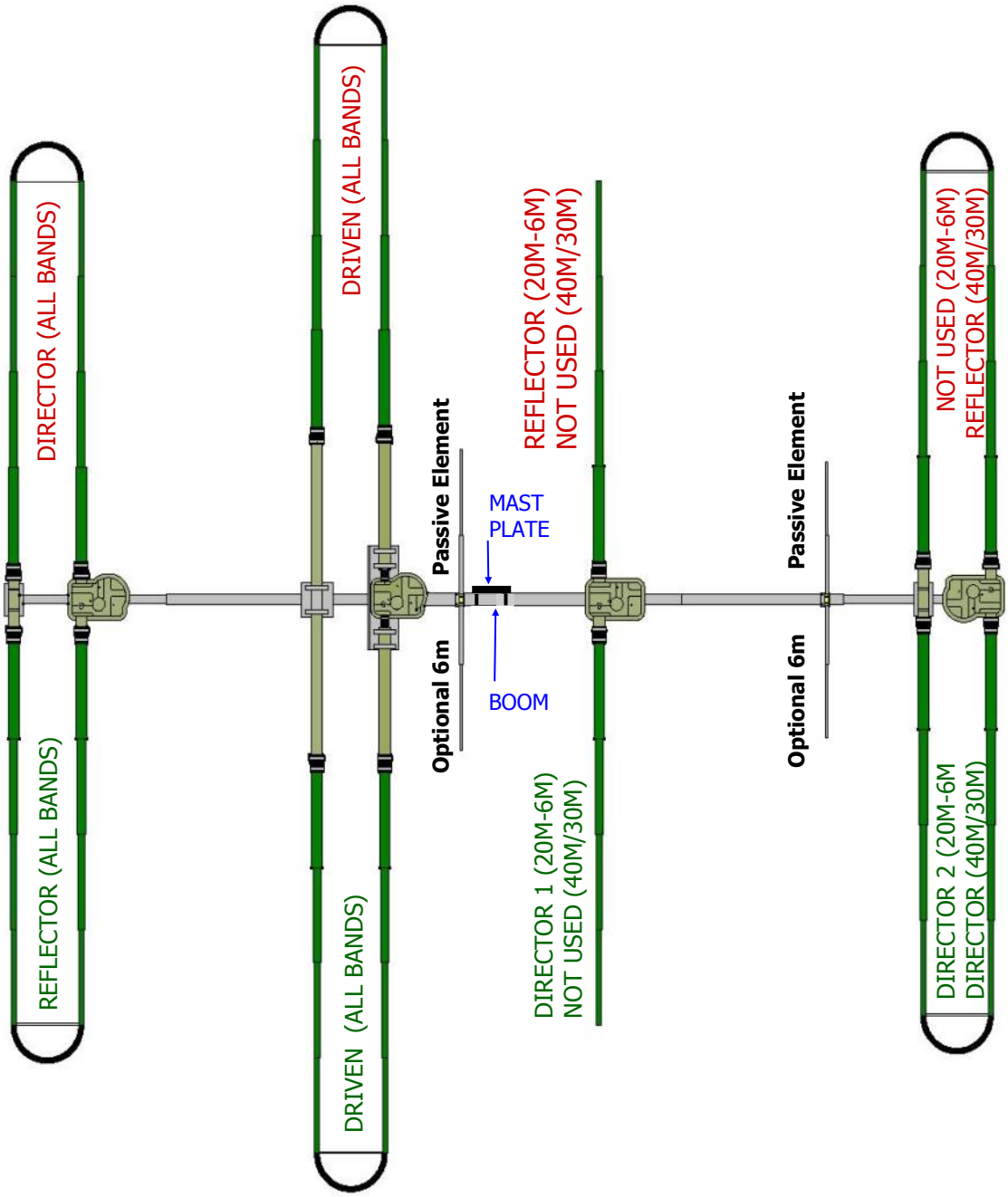

FORWARD DIRECTION (Normal)

BOOM LAYOUT

Our boom pieces are all drilled on a very precise drill press. This ensures that all the bolts are snug when assembled. It is always better to be too tight than too loose. Always apply an anti-seize lubricant to stainless steel bolts that are using stainless steel nuts. This will prevent the two from galling together. Galling of stainless steel is common and has nothing to do with the quality of the material. Refer to the galling information in the Preamble section of this manual.

Each bolt has a specific length for the particular tubing it is holding together. It is important that the shank of the bolt is engaged in the tubing, since that is the strongest portion of the bolt. Use 5 washers per bolt to secure the bolt as shown in figure 1.02 on the following page.

Apply a thin film of a lubricant such as Anti-seize or Noalox to the male engagement area of the aluminum boom sections. Failure to do so may cause the tubes to seize inside each other. Match the boom pieces as shown below and slide each boom piece together until the pre-drilled holes align.

Secure the correct bolts and washers onto the boom as shown in figure 1.01. Repeat this for each section until the boom is completely assembled

Secure the 3/8" eyebolt as shown in figure 1.03. This eyebolt is part of our EZ-Eye system, which helps to level the boom and also assists in keeping the boom from shifting during high winds.

FIGURE 1.01

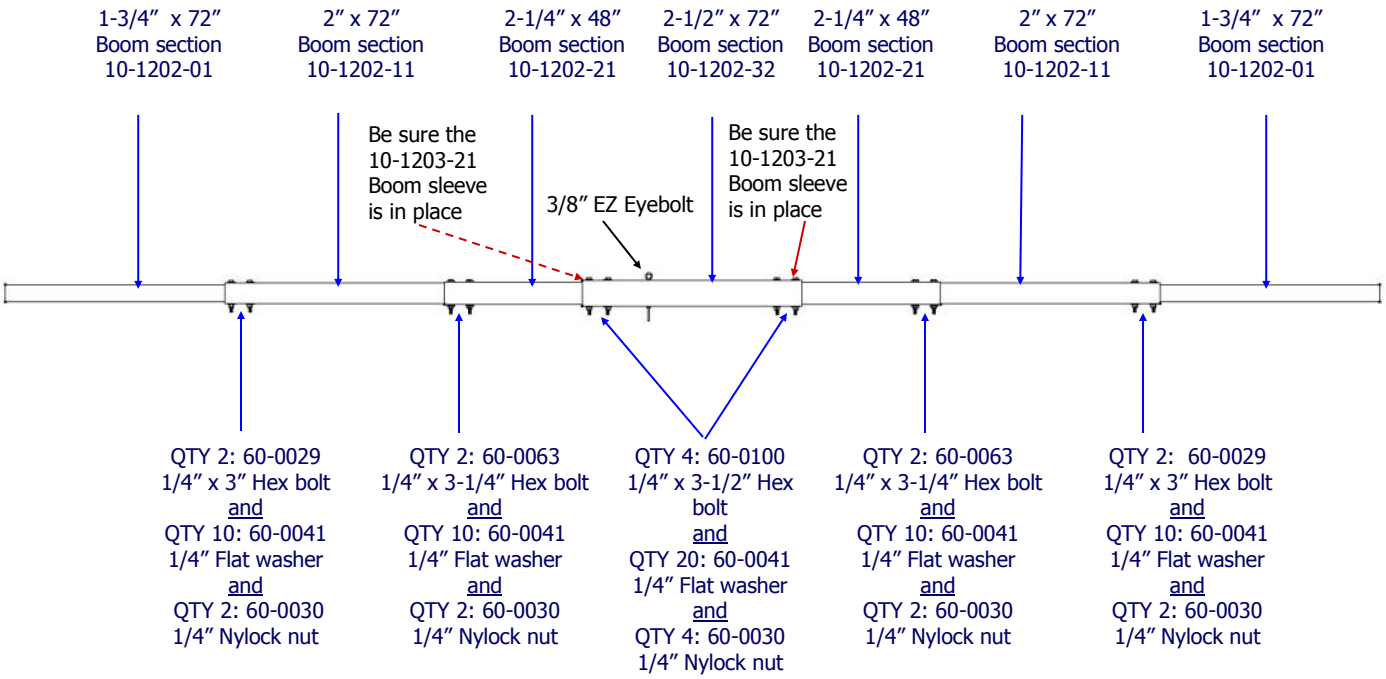

BOOM BOLT / EZ-EYEBOLT DETAIL

When securing the eye-bolt and boom bolts to the boom, install the eye and the head of the bolts on the same side of the boom, so that they will be facing upwards when the boom is secured to the tower. The 1/4" boom bolts require 5 washers, as shown below in figure 1.02.

Figure 1.02

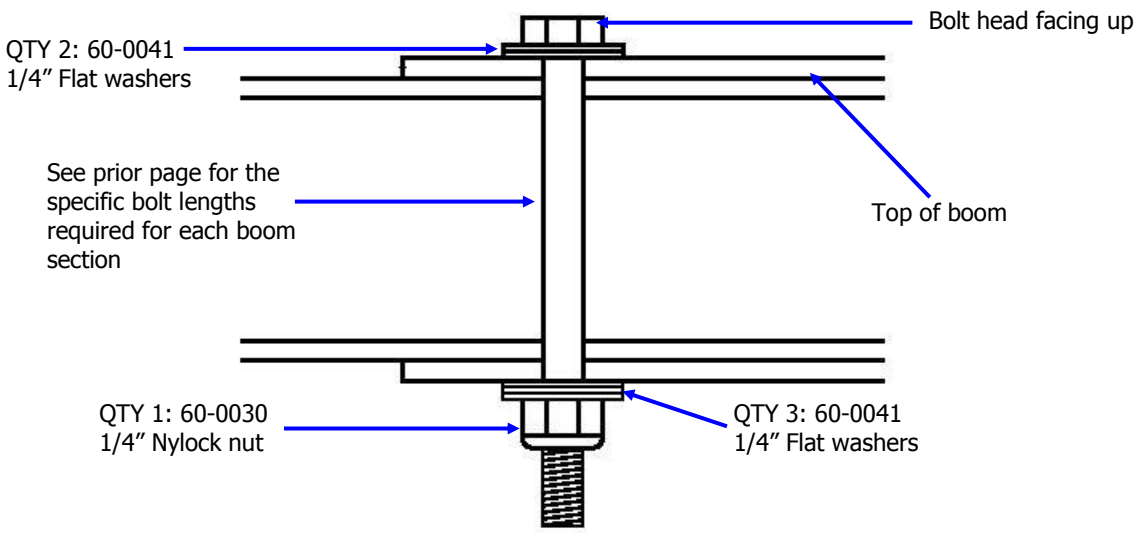

When securing the EZ-Eyebolt to the boom, five 3/8" flat washers (PN 60-0034) are used as a spacer as shown in figure 1.03.

Figure 1.03

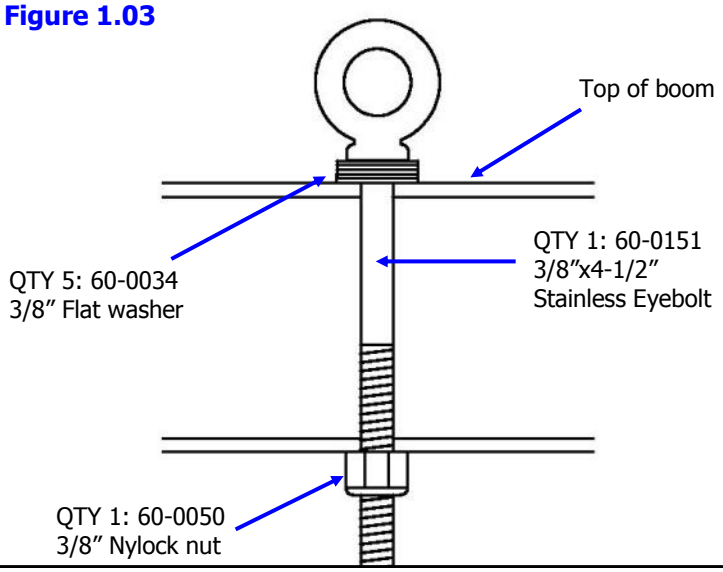

BOOM REINFORCING SLEEVE

The DB36 utilizes a boom reinforcing sleeve, located at the junction point where the 2-1/4" boom sections mate with the 2-1/2" boom section. This action effectively doubles the wall thickness at this critical location.

Locate the 2" x 10" boom reinforcing sleeve (PN 10-1203-21) and apply Noalox or other lubricant to each end of the sleeve so that it will slide inside the 2-1/4" boom without seizing. Slide the boom reinforcing sleeve into the 2-1/4" portion of boom as shown in figure 1.05. Align so that the holes in the boom reinforcing sleeve match with the holes in the 2.25" portion of the boom as shown in figure 1.06.

Apply Noalox to the outside of the 2-1/4" boom piece and slide into the 2-1/2" boom piece as shown in figure 1.07. Insert the 1/4" x 3-1/2" hex head bolts (PN 60-0100) bolts through the 3 pieces (2-1/2" boom, boom reinforcing sleeve & 2-1/4" boom) along with the 1/4" washers (60-0041). Thread the 1/4" Nylock nuts (PN 60-0030) onto the bolts and tighten firmly as shown in figure 1.08. Repeat for the other side of the 2-1/2" boom. Figure 1.04 shows this procedure in a step-by-step sequence.

FIG. 1.04

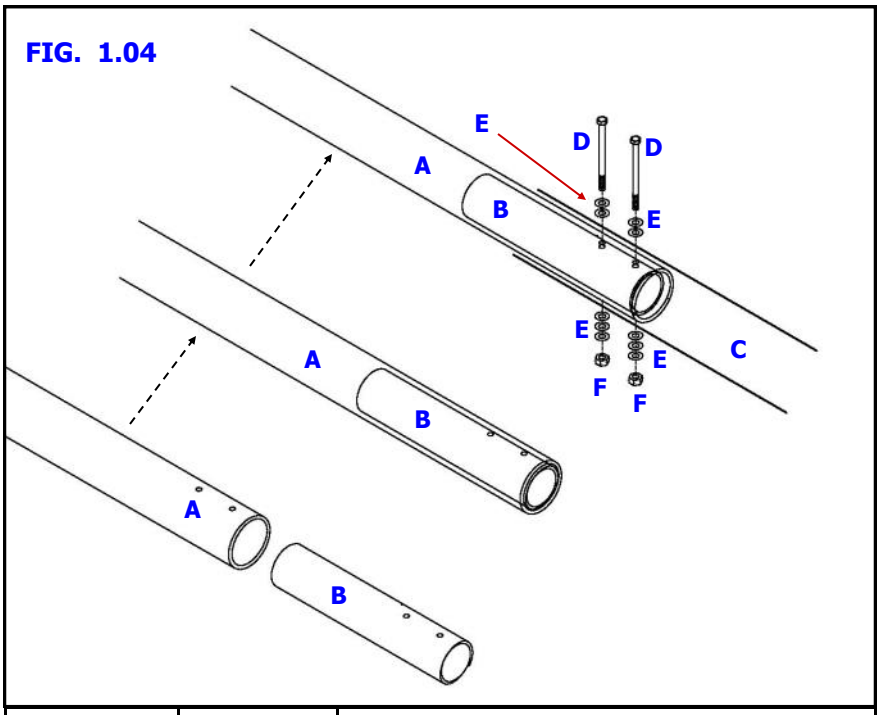

Key	Part #	Description
A	10-1202-21	2-1/4" x 48" Boom section
B	10-1203-21	2" x 10" Boom sleeve
C	10-1203-31	2-1/2" x 72" Boom section
D	60-0100	1/4" x 3-1/2" Hex head bolt
E	60-0041	1/4" Flat washer
F	60-0030	1/4" Nylock nut

FIG. 1.05

FIG. 1.06

FIG. 1.07

FIG. 1.08

ELEMENT HOUSING UNIT (EHU) PLACEMENT

The diagram in figure 3.01 below shows the placement of the element housing units (EHU's) for the DB36 Yagi. In addition, the optional 6m passive elements are shown along with the mounting brackets for the boom truss and 80m truss (if applicable). Refer to the following page for actual placement measurements.

When you are facing the boom portion of the mast plate, the orientation will always be with the reflector to the left of the mast plate and the directors to the right of the mast plate. We refer to all draw-

FIG. 2.01

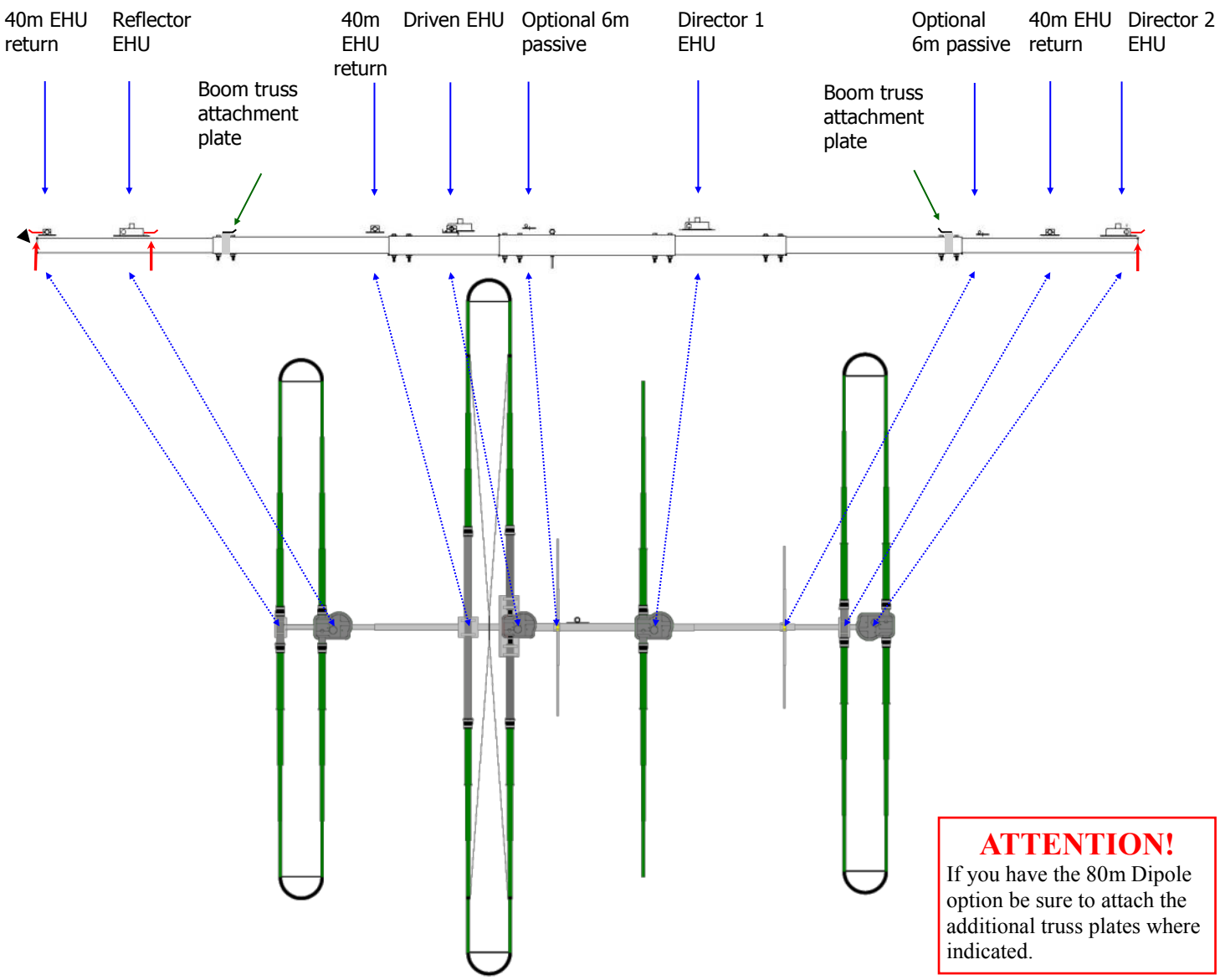

ATTENTION!
If you have the 80m Dipole option be sure to attach the additional truss plates where indicated.

EHU CENTER-T0-CENTER SPACING MEASUREMENTS

It is critically important that the center-to-center spacing is correct when assembling your SteppIR DB36 Yagi. Use figure 2.02 for placement of each of the elements. Start from the left edge of the boom and measure from there.
As you assemble each of the element housing units (EHU's), refer to this drawing. We recommend this sequence:

1. Secure the element mounting plates to the boom using the correct saddles and fasteners (be sure to use anti-seize on all stainless steel fasteners). Tighten enough to hold them in place, but loose enough so you can move the mounting plates for final tightening.
2. Wire the EHU's and secure them to the element mounting plates (don't forget the gasket!). The mounting plate itself acts as the lid for the DB36 EHU's, with the exception of the 49 ft Driven element.
3. Measure your center-to-center lengths, level the mounting plates and firmly tighten.
4. Re-measure all of your lengths and correct if needed. Take your time, get it right.

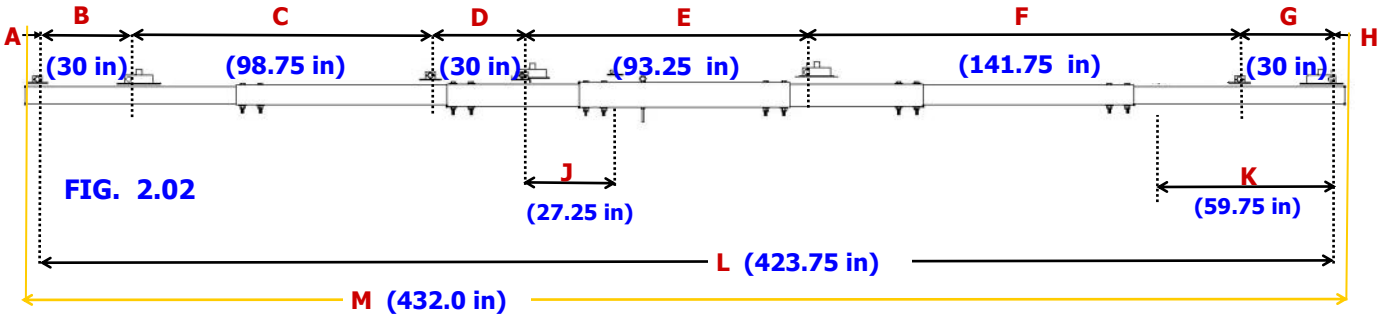

FIG. 2.02

KEY	Start measurement at center-point of:	Finish measurement at center-point of:	Measurement distance between points
A	*Boom edge	Loop return (REF)	3.875 inches
B	Loop return (REF)	Reflector EHU	30.0 inches
C	Reflector EHU	Loop return (DRV)	98.75 inches
D	Loop return (DRV)	Driven EHU	30.0 inches
E	Driven EHU	Director 1 EHU	93.25 inches
F	Director 1 EHU	Loop return (DIR2)	141.75 inches
G	Loop return (DIR2)	Director 2 EHU	30.0 inches
H	Director 2 EHU	Edge of boom	4.375 inches
J	Driven EHU	Optional 6m passive 1	27.25 inches
K	Optional 6m passive 2	Director 2 EHU	59.75 inches
L	Loop return (REF)	Director 2 EHU	423.75 inches
M	Boom edge*	Boom edge*	432.0 inches

*There is no center-point measurement at the boom edge—place the ruler literally on the edge of the boom

ELEMENT HOUSING UNIT (EHU) WIRING OVERVIEW

Figure 2.10 gives an overview of the inside of a SteppIR EHU. Wiring of each EHU will be covered in detail on the following pages.

NEVER ATTEMPT ANY WIRING WHILE THE ELECTRONIC CONTROLLER IS CONNECTED TO THE CONTROL CABLE. Even if the power is turned off of the controller, damage can occur. This is the number one cause of antenna installation failures, so please be sure to heed the advice.

FIG. 2.10

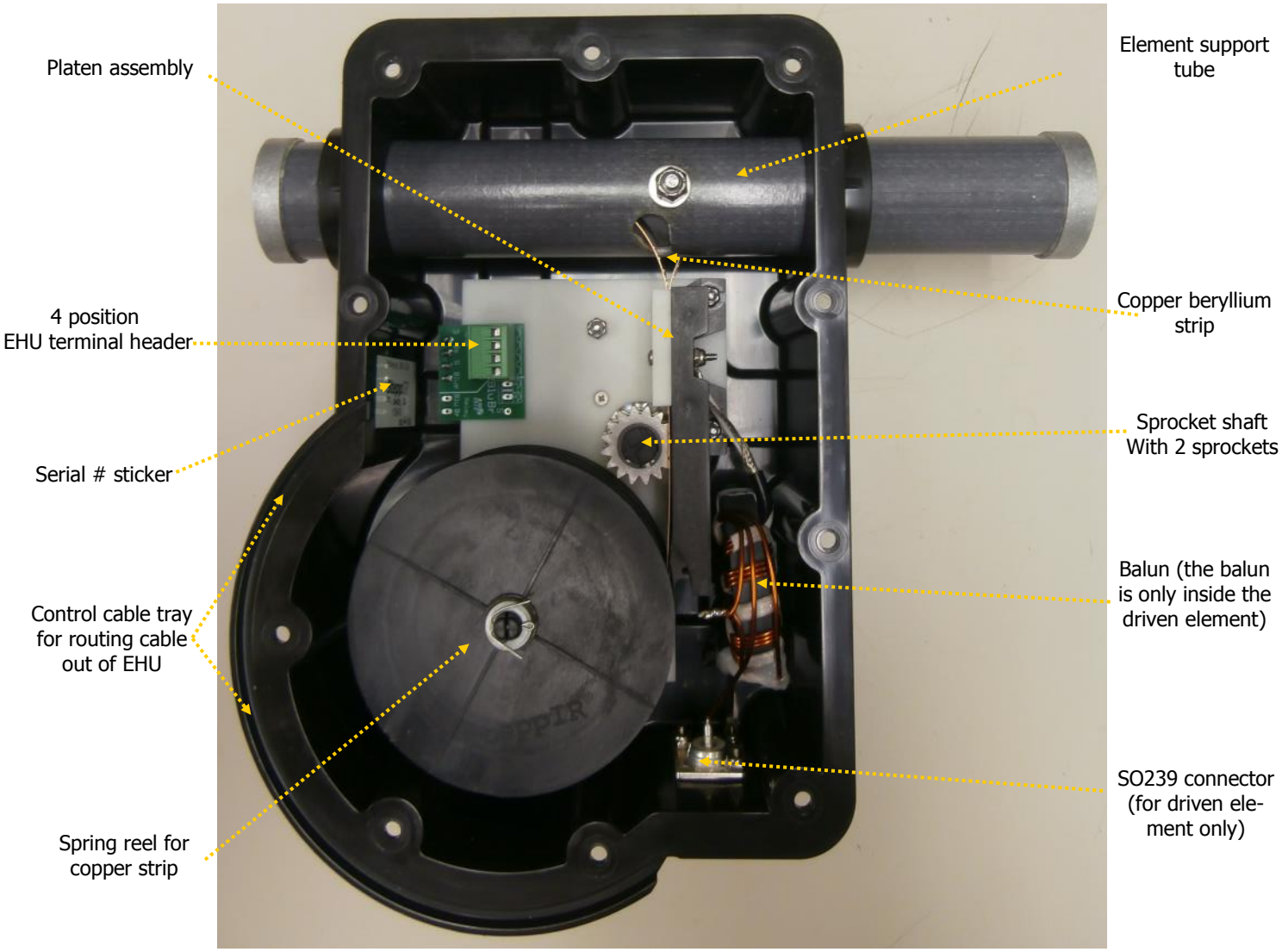

EHU WIRING

Trim approximately 1.5 inches of the outer jacket of the control cable (4 wire). Remove the shield material, the support thread and cut the ground wire off as shown in figure 211. Attach electrical tape at the end of the trimmed control cable jacket so that there is no chance for a short. Remove 0.25 inches of the insulation from each of the individual 22 AWG wires, leaving bare copper. Tinning of the copper wire ends with solder is not required but may be helpful in keeping the ends together while attaching the control cable wires. Figure 2.12 shows the control cable should look like when you are finished with the trimming. Dip each of the copper wires into connector protector before inserting into the terminal plug. Figure 2.13 shows what the connector protector will look like.

The terminal header assembly consists of the terminal header and the terminal plug as shown in figure 2.15. The plug is shipped loosely attached to the header. Remove this plug when wiring and firmly plug back in when completed. Follow the wire sequence in figure 2.15 for each EHU. *Be careful to ensure that there are no bare wires protruding out from the terminal clamps, to avoid potential shorts.*

The wiring sequence for each EHU is also imprinted on the PCB that the terminal header is mounted on (located inside the EHU). Pay no attention to the second row of imprinted text, these pins are for use in the manufacturing of the board itself and are of no use to you. Figure 2.14 shows a blue line crossing out the text in question. The yellow circle shows the correct wiring sequence.

FIG. 2.11

FIG. 2.12

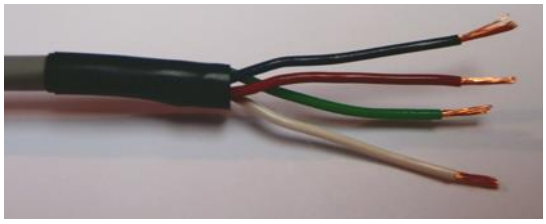

FIG. 2.13

FIG. 2.14

4 Pin Header Wiring Sequence

BLACK	RED	GREEN	WHITE

FIG. 2.15

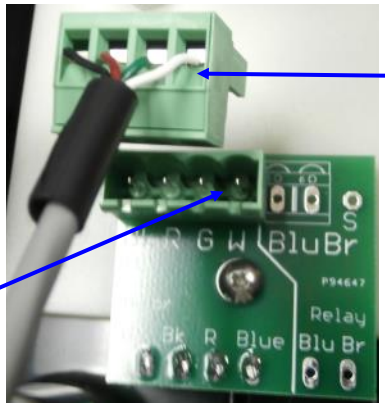

EHU WIRING (continued)

Check to be sure the terminal plug is firmly inserted into the terminal header.

Lay the control cable wire inside the wire tray of the EHU as shown in figure 2.16. This trough acts as a strain relief so that the cable will not be pulled out of the EHU. It is a good idea to leave a small amount of slack between the plug and the point which the tray starts as shown in figure 2.17.

Using the coax seal and cut into 1 inch strips as shown in figure 2.18. You will need three strips. The remainder can be used to seal the driven element SO239 connectors, should you wish to.

Apply coax seal on top of the control cable and work it around the cable and on top of the cable tray as shown in figure 2.19. This will help keep water from entering into the EHU. Apply the coax seal to the 2 remaining sections of the wire tray as shown in figure 2.20.

Repeat wiring and coax seal preparation for each EHU. When finished, the EHU's will be secured to the aluminum element mounting plates. This is covered in detail in the next chapter.

65' of 4 conductor wire is included with the antenna. You can trim the runs of wire later, but at this stage cut the wire into the following lengths:
21' for the Reflector, 9' for the Driven, 11' for Director #1, 24' for Director #2

FIG. 2.16

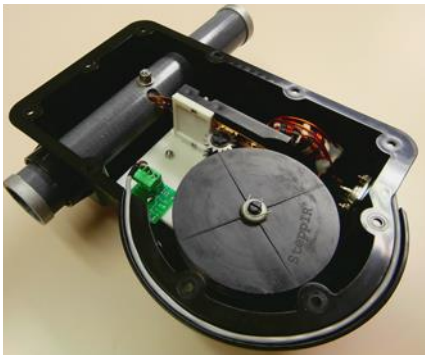

FIG. 2.17

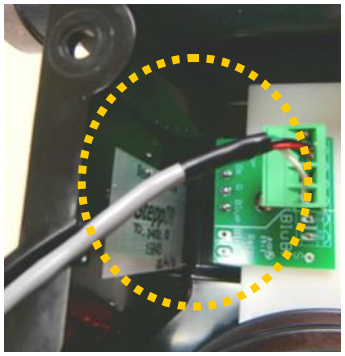

FIG. 2.18

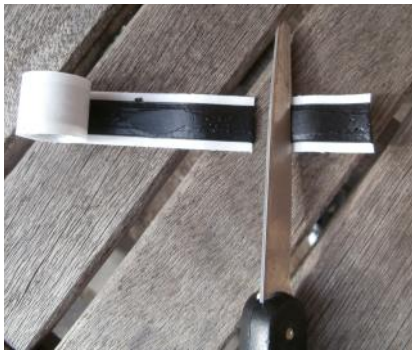

FIG. 2.19

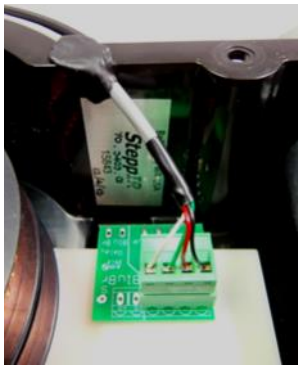

FIG. 2.20

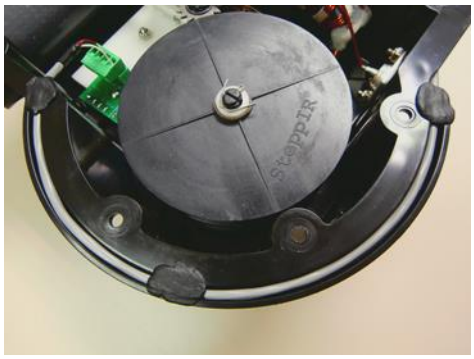

DRIVEN ELEMENT EHU & RETURN TUBE ASSEMBLY

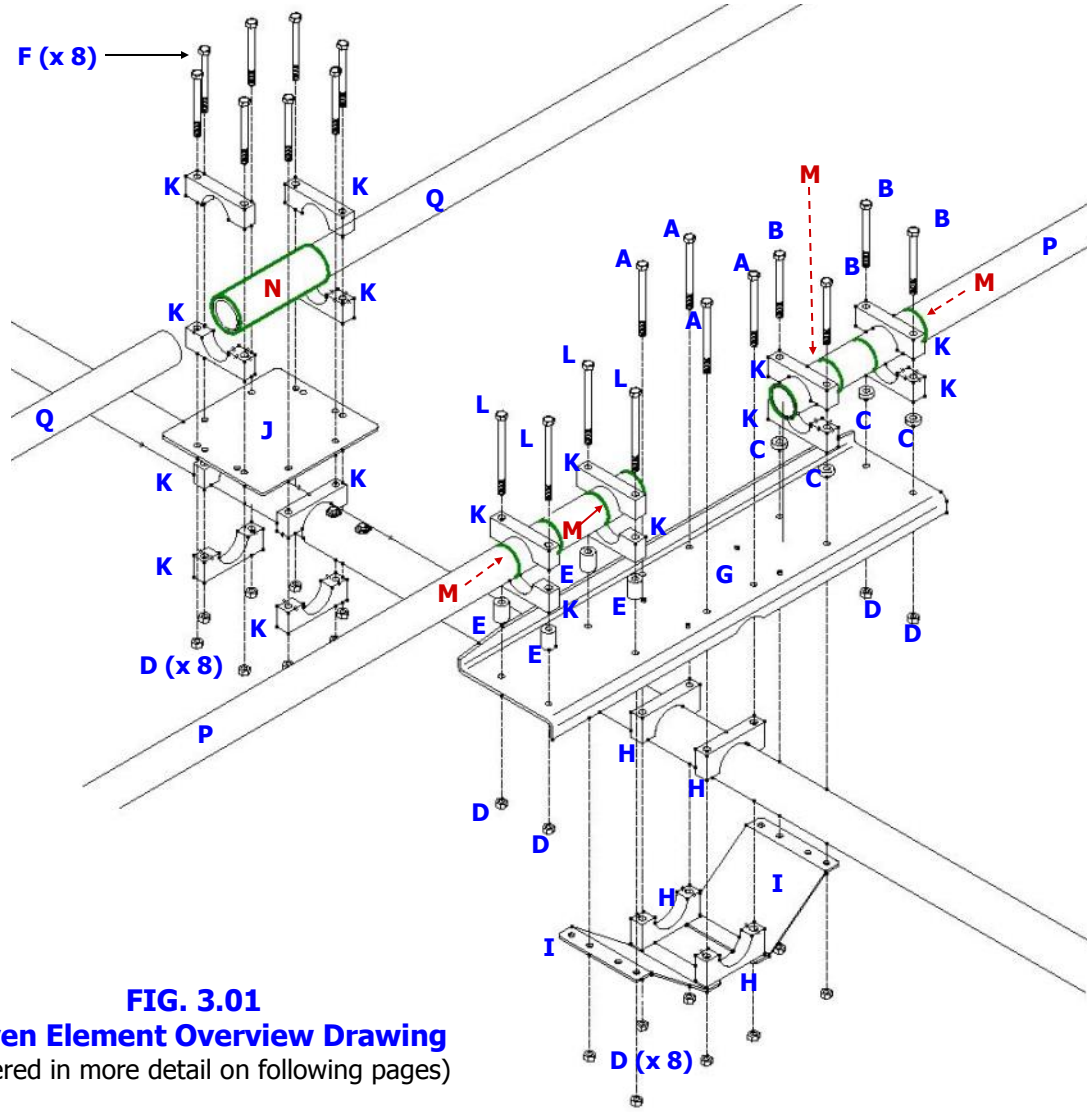

FIG. 3.01
Driven Element Overview Drawing
(Covered in more detail on following pages)

Key	QTY	Part Number	Description	Key	QTY	Part Number	Description
A	4	60-0066	5/16″ X 4″ Hex head bolt	I	2	10-1606-01	Reinforcing plate
B	4	60-0114	5/16″ x 3-3/4″ Hex head bolt	J	1	10-1608-01	Element return plate
C	4	10-1613-11	1/4″ Aluminum spacer	K	16	10-1601-22	2″ Aluminum saddle half
D	20	60-0046	5/16″ Nylock nut	L	4	60-0115	5/16″ x 4-1/2″ Hex head bolt
E	4	10-1613-01	1″ Aluminum spacer	M	4	10-1601-11	2″ x 3″ Stress relief tube (insert on OD of fiberglass EST)
F	8	60-0065	5/16″ x 3-1/2″ Hex head bolt	N	1	10-1630-21	2″ X 12″ Stress relief tube (insert on OD of fiberglass EST)
G	1	10-1605-11	Element mounting plate	P	2	70-2029-01	1-3/4″ X 60-3/4″ EST tube
H	4	10-1601-32	2-1/4″ Aluminum saddle half	Q	2	70-2028-01	1-3/4″ x 66-3/8″ EST tube

ATTACH THE ELEMENT MOUNTING PLATE—DRIVEN

The DB36 Driven loop element is 49 feet in length. The other two loop elements (REF& DIR 2) on the DB36 are 39 feet in length. There is a reason for this— by having the middle loop element 49 feet, it electrically makes the two end elements perform as if they are 49 feet in length too. This is the basis for one of the SteppIR patents and is fundamental in the outstanding performance the DB36 delivers on the 40m and 30m bands while being 40% shorter than a full sized Yagi on those bands.

The construction of the Driven element is the most complex portion of the DB36 installation process. To make life easier for the installer, we have condensed this procedure into four separate sections.

Figure 3.02 shows the items required for installing the element mounting plate for the Driven element. Detailed instructions follow. Note that the KEY letters referenced match up to the ones in figure 3.01.

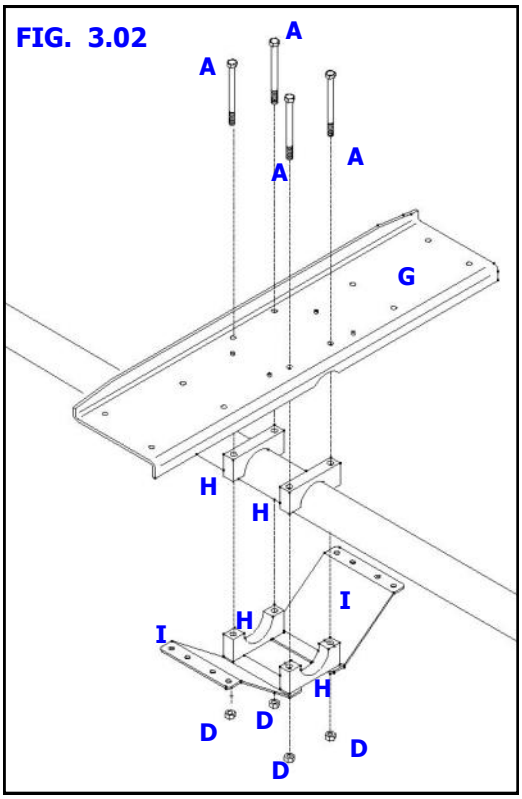

Key	QTY	Part Number	Description
A	4	60-0066	5/16" X 4" Hex head bolt
H	4	10-1601-32	2-1/4" Aluminum saddle half
D	4	60-0046	5/16" Nylock nut
G	1	10-1605-11	Element mounting plate
I	2	10-1606-01	Reinforcing plate

ATTACH THE ELEMENT MOUNTING PLATE—DRIVEN (continued)

Refer to Chapter Two for center-to-center measurements. Locate the element mounting plate (PN 10-1605-11) and insert four 5/16″ x 4″ hex head bolts (PN 60-0066) through the plate as shown in figure 3.03. Insert two of the 2-1/4″ aluminum saddle halves (PN 10-1601-32) onto the hex head bolts and place on top of the boom on the 2-1/4″ section as shown in figure 3.04. The upward lip of the mounting plate should be facing towards the Reflector side of the boom as shown in figure 3.05. Securing the element mounting plate with a clamp is highly recommended, especially if there is only one person doing this step. Figure 3.06 shows the clamp in place with the upward lip of the mounting plate facing the Reflector side of boom.

Figure 3.07 shows how the two reinforcing plates (PN 10-1606-01) will be positioned underneath the element mounting plate. Place two of the 2-1/4″ aluminum saddles onto the 5/16″ x 4″ hex head bolts, follow with a reinforcing plate on the bottom of each saddle as shown in figure 3.08. Attach four 5/16″ Nylock nuts (PN 60-0046), but leave loose. Be sure to apply anti-seize on each stainless steel fastener. Note that the outward side of the reinforcing plates have not yet been fastened. This will be covered in a later step.

Figure 3.09 shows the completed element mounting plate attached to the boom. The clamp has been removed for clarity, we recommend you keep it in place until later in the assembly process.

FIG. 3.03

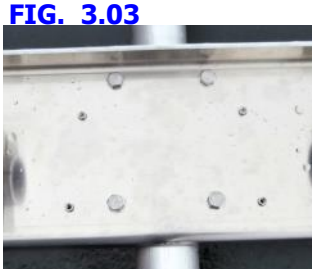

FIG. 3.04

FIG. 3.05

FIG. 3.06

FIG. 3.07

FIG. 3.08

FIG. 3.09

ELEMENT SUPPORT TUBE (EST) MOUNTING - OVERVIEW

Figure 3.10 shows the detail for attaching the element support tubes (EST's) to the Driven element mounting plate.

Note the stress relief tubes shown in figure 3.10—they are outlined in red to show their placement. These tubes are placed on the outside diameter (OD) of the 1-3/4" fiberglass EST tube to keep the saddles from crushing when the aluminum saddles are secured in place. This will be covered in more detail later in this section.

FIG. 3.10

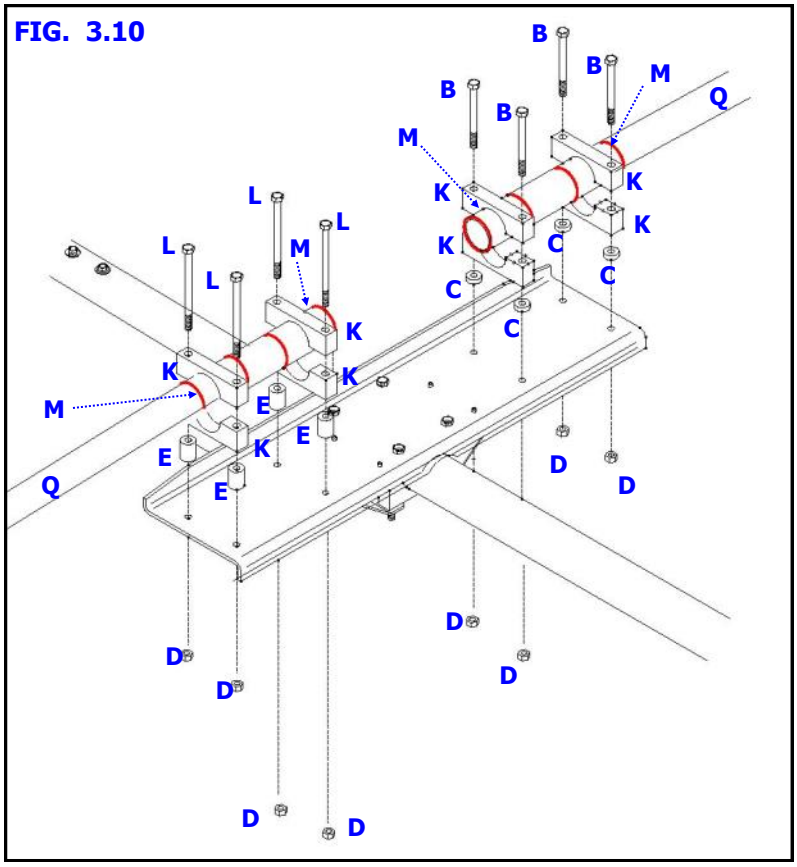

Key	QTY	Part Number	Description
L	4	60-0115	5/16" x 4-1/2" Hex head bolt
E	4	10-1613-01	1" Aluminum spacer
B	4	60-0114	5/16" x 3-3/4" Hex head bolt
C	4	10-1613-11	1/4" Aluminum spacer
D	8	60-0046	5/16" Nylock nut
K	8	10-1601-22	2" Aluminum saddle half
M	4	10-1601-11	2" x 3" Stress relief tube
Q	2	70-2029-01	1-3/4" x 60-3/4" EST tube

PREPARE MOUNTING PLATE FOR ATTACHING THE EST's

All of the SteppIR EHU's have a "diverter" inside them to direct each half of the copper-beryllium strip in the correct direction. The Driven element on the DB36 is quite a bit longer than the normal loops, so a different diverter system must be employed. This is the reason why the Driven element has 3/4" CPVC tubing coming out each side, with the tubes being offset from each other as shown in figure 3.11. The EST tubes on each side of the element need to be level with each other, so different sized aluminum spacers are used to accomplish this.

Locate four 1" aluminum spacers (PN 10-1613-01). These are used on the "high" or closest side of the EHU when facing the boom with the reflector to your left as shown in figure 3.12. Using two 2" aluminum saddles halves (PN 10-1601-22), insert the 5/16" x 4-1/2" hex head bolts (PN 60-0115) through the saddle halves and insert the 1" aluminum spacers onto the hex head bolts. Attach this assembly to the element mounting plate by inserting the thread ends of the hex head bolts as shown in figure 3.13. Loosely thread on the 5/16" Nylock nuts (PN 60-0046). Repeat for the second assembly.

Locate four 1/4" aluminum spacers (PN 10-1613-11). These are used on the "low" or furthest side of the EHU when facing the boom with the reflector to your left as shown in figure 3.14. Using two 2" aluminum saddles halves (PN 10-1601-22), insert the 5/16" x 3-3/4" hex head bolts (PN 60-0114) through the saddle halves and insert the 1/4" aluminum spacers onto the hex head bolts. Attach this assembly to the element mounting plate by inserting the thread ends of the hex head bolts as shown in figure 3.15. Loosely thread on the 5/16" Nylock nuts (PN 60-0046). Repeat for the second assembly.

Note that when the inner saddle pairs are mounted (the ones closest to the EHU), the hex head bolts will also need to be inserted through the top portion of the reinforcing plate as shown in figure 3.15.

Figure 3.16 shows the completed assembly.

FIG. 3.11

FIG. 3.12

FIG. 3.13

FIG. 3.14

FIG. 3.15

FIG. 3.16

ATTACH THE ELEMENT SUPPORT TUBES—DRIVEN

Locate the 1-3/4" x 60-3/4" element support tube (PN 70-7028-01). Slide the first 2" x 3" stress relief sleeve (PN 10-1601-11) onto the element support tube (EST). Using a tape measure, position the reinforcing sleeve so that the top edge of the sleeve is 5.625" from the edge of the EST that does NOT have the reinforcing ring already attached on the edge, as shown in figure 3.20.

Slide the second reinforcing sleeve onto the EST tube, so that it is flush with the EST tube and the slotted portion of the reinforcing sleeve faces downward as shown in figure 3.21. The slotted portions on each of the two reinforcing rings should be aligned so that they are in the same downward position. Using a tape measure, mark 1/2" from the flush edge of the EST tube as shown in figure 3.22. Repeat for the EST for the other side of the EHU. Figure 3.23 shows the prepared EST.

Insert the end of the EST that has the reinforcing sleeves on it through the 2" saddles located on the mounting plate. Position the EST so that the mark you made 1/2" from the edge of the EST is now lined up with the edge of the forward saddle, and the other reinforcing sleeve is centered on the rear saddle as shown in figure 3.24. Tighten the saddles to no more than 7 ft lb. Be sure the slotted portion of reinforcing sleeves are pointing downward.

Position the EHU so that the center-point of the element is 162.625 inches from the left edge of the boom as shown in figure 3.25. Place a level in-between the two ends of the EST's as shown in figure 3.26 and when level, tighten the saddles firmly. Figure 3.27 shows the prepared EST's ready for the EHU to be mounted.

FIG. 3.20

FIG. 3.21

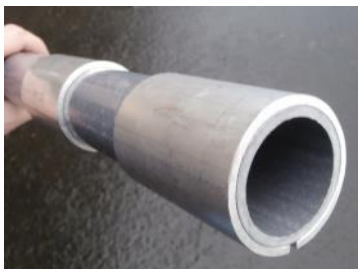

FIG. 3.22

FIG. 3.23

FIG. 3.24

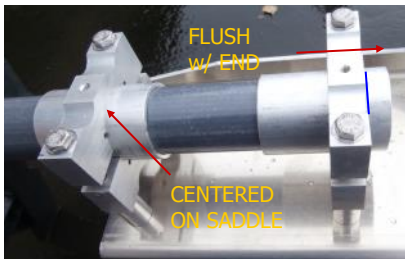

FIG. 3.25

FIG. 3.26

FIG. 3.27

SECURE THE DRIVEN ELEMENT EHU TO THE MOUNTING PLATE

The Driven element EHU (PN 70-3405-01) is different from the rest of the EHU's because there is a plastic lid that needs to be installed before attaching the EHU to the mounting plate. The other EHU's all utilize the mounting plate itself as the lid.

The Driven EHU must be wired before placing the lid on it and the coax seal needs to be in place as covered earlier. Be sure to remove and discard the foam protector that is shrink wrapped to the EHU before the lid is secured. Failure to do so could lead to catastrophic failure. Figure 3.31 shows the foam protector pad *before* it is removed from the EHU.

There are a total of ten #10 screws used to fasten the lid. Six of these screws utilize the Nylock nuts, and will be positioned with the threads pointing upward as shown in figure 3.30. The remaining four #10 machine screws are used to attach the Driven EHU to the element mounting plate and will be covered in more detail in the next step.

Place the gasket material so that it aligns with the holes in the EHU lid as shown in figure 3.30. Place the EHU on top of the gasket and using ONLY the six #10 x 3/4" screws, #10 Nylock nuts and #10 flat washers, fasten the lid to the EHU. There must be a washer between the top of the EHU flange and the Nylock nut. Be sure that the control cable wire is cleanly positioned inside the molded wiring trough.

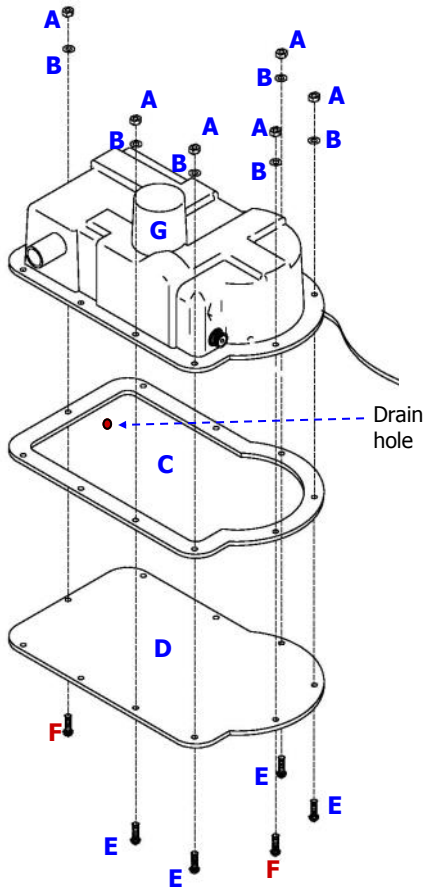

FIG. 3.30

FIG. 3.31

Key	QTY	Part #	Description
A	6	60-0019	#10 Nylock nut
B	6	60-0018	#10 Flat washer
C	1	10-1502-12	EHU gasket
D	1	10-1501-23	EHU lid w/drain hole
E	4	60-0017	#10 x 3/4" machine screw
F	2	60-0017-10	#10 x 3/4" Flat head screw
G	1	70-3405-01	Driven EHU

SECURE THE DRIVEN EHU TO THE MOUNTING PLATE (continued)

Place the EHU as shown in figure 3.32. Be certain the four 1/4" aluminum spacers (PN 10-1613-11) are positioned over the PEM nuts, between the element mounting plate and the EHU lid as shown in figure 3.33. The aluminum spacers protect the PEM nuts and elevate the EHU above the bolt heads that are holding the mounting plate to the boom.

When the EHU is placed on top of the spacers, the plastic EST tube that protrudes out of the EHU should be roughly aligned with the center of the EST extension tube as shown in figure 3.34.

Insert the #10 x 3/4" machine screws (the ones with the locking strip as shown in figure 3.35) with the threads pointing downward. Be certain that there is a #10 flat washer between the top flange of the EHU and the head of the machine screw. Align with the PEM nuts and tighten each screw. Do not over -tighten or you could potentially crack the mounting flange on the EHU.

FIG. 3.32

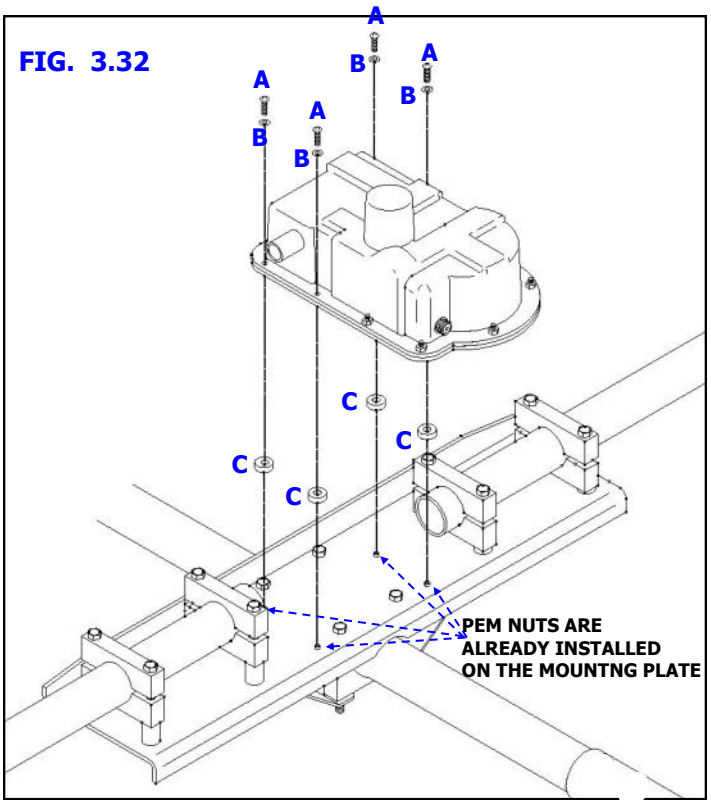

Key	QTY	Part #	Description
A	4	60-0101	#10 x 3/4" Machine screw with locking strip on threads (see PIC XX)
B	4	60-0018	#10 Flat washer
C	4	10-1613-11	1/4" Aluminum spacer

FIG. 3,33

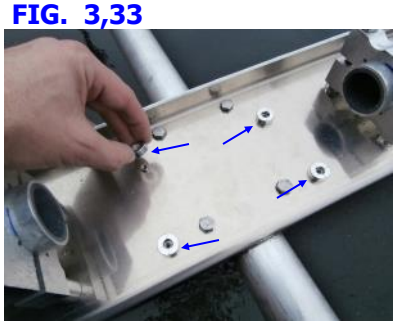

FIG. 3.34

FIG. 3.35

INSTALLING THE CPVC INNER GUIDE TUBES

All of the looped elements have inner guide tubes. The DB36 Driven element utilizes a different method for attaching the inner guide tubes than the two 39 foot end loops due to it's extra length.

There are three sections to the inner guide tube as shown in figure 3.40. In this chapter, you will be working with the first section of the tube (PN 70-2025-33). We recommend you wait until just before the telescoping poles are attached later in this manual before gluing the remaining sections. This will keep you from potentially tripping over them while the rest of the antenna is being assembled. ***When gluing the 3 pieces together, be sure you do <u>NOT</u> put any glue inside the coupler—only apply glue to the outside diameter of the tubing.***

Locate the section of the guide tube that has the pre-installed foam centering rings and the black rubber coupler on it (PN 70-2025-33). The foam centering rings have a slot in them as shown in figure 3.41. It is important that these slots are facing upward when inserting into the element support tube (EST). The slots are used as vents to assist in preventing condensation from forming internally. Because you will not be able to see that the slots are indeed pointing upward once the guide tubes are in place, we recommend you mark the correct position on the opposite end of the guide tube as shown in figure 3.42. Insert the inner guide tube into the EST as shown in figure 3.43 and continue to push until the black rubber coupler is protruding slightly as shown in figure 3.44. Figure 3.45 is a cutaway drawing to give you a visual perspective during this process.

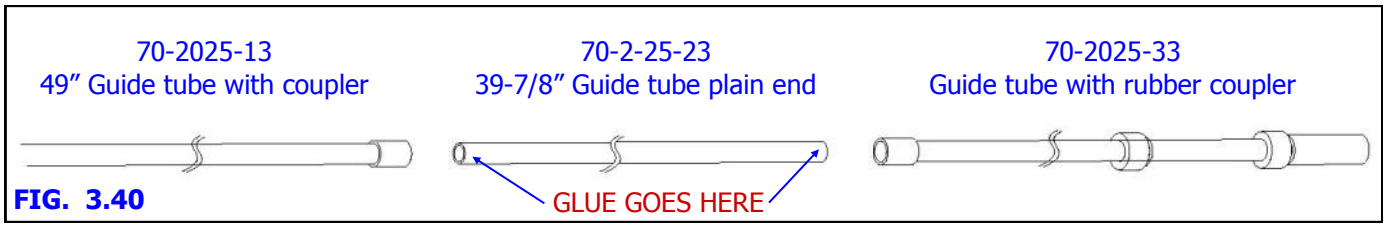

FIG. 3.40

FIG. 3.41

FIG. 3.42

FIG. 3.43

FIG. 3.44

FIG. 3.45

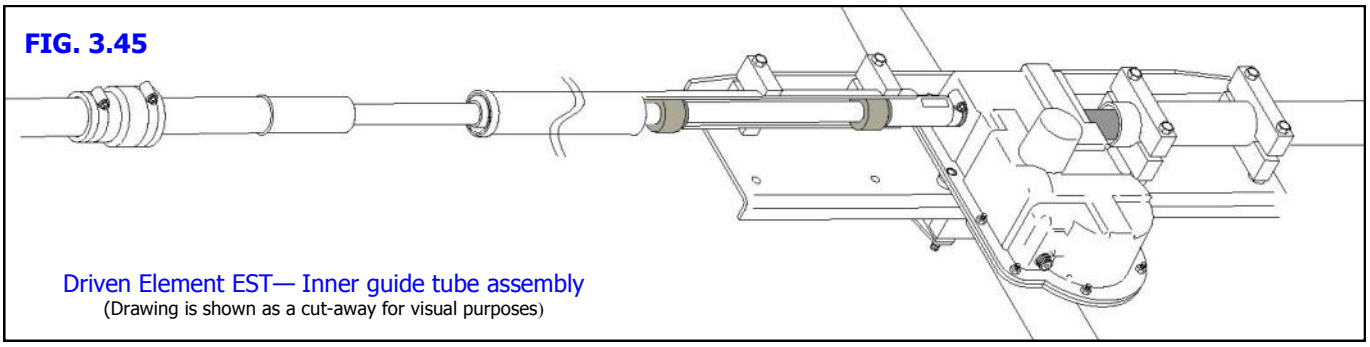

Driven Element EST— Inner guide tube assembly
(Drawing is shown as a cut-away for visual purposes)

INSTALLING THE CPVC INNER GUIDES (continued)

Insert the #16 Stainless steel hose clamp (PN 60-5000-15) onto the CPVC tube as shown in figure 3.46. Position the black rubber coupling until it is aligned with the CPVC tube and then slide the hose clamp onto the rubber coupling.

Grip the end of the guide tube that is protruding out of the EST and rotate the tube as needed while pushing the guide tube in until the black rubber coupler bottoms out against the EHU as shown in figure 3.47. Tighten the hose clamp firmly as shown in figure 3.48. Wait 20 minutes and then tighten it again to guard against cold flow of the plastic. Repeat for the other side of the EHU.

Figure 3.49 shows the completed inner guide tube assembly. Figure 3.50 gives you an idea of how far out the CPVC inner guide tubes will extend when glued together. This is why we recommend you wait until much later in the process to complete the guide tube assembly.

FIG. 3.46

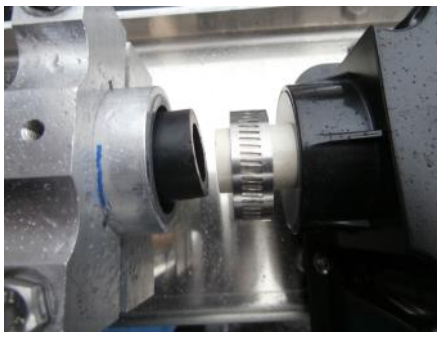

FIG. 3.47

FIG. 3.48

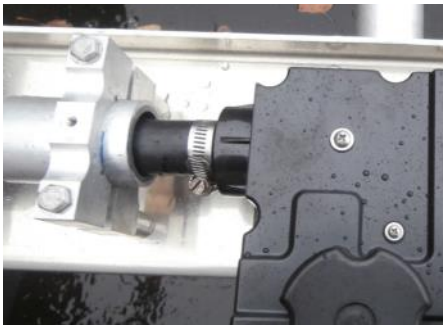

FIG. 3.49

FIG. 3.50

RETURN TUBE ASSEMBLY—DRIVEN

Figure 3.51 shows an overview of the return tube assembly for the Driven element.

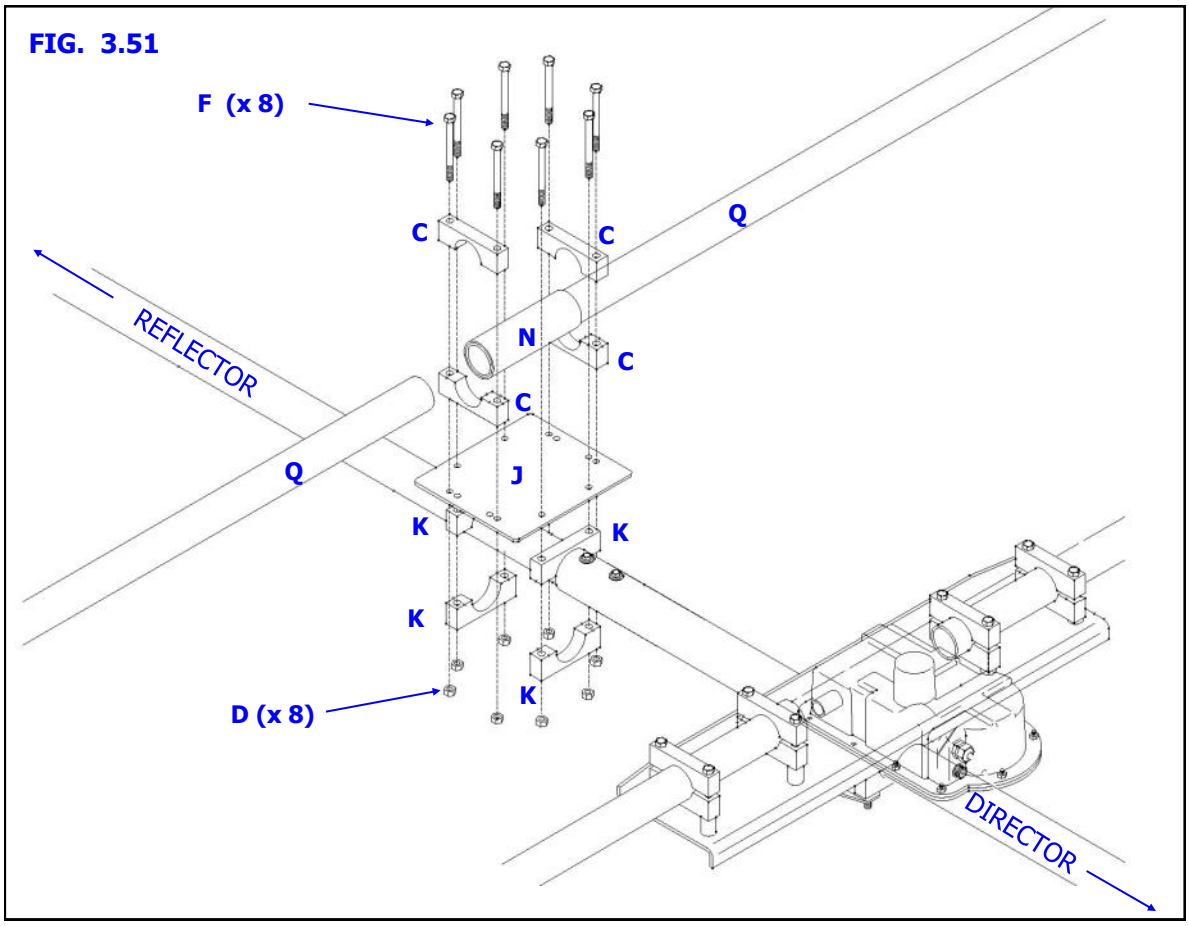

Key	QTY	Part Number	Description
F	8	60-0065	5/16″ x 3-1/2″ Hex head bolt
D	8	60-0046	5/16″ Nylock nut
K	8	10-1601-22	2″ Aluminum saddle half
N	1	10-1630-21	2″ x 12″ Stress relief sleeve
Q	2	70-2028-01	1-3/4″ x 66-3/8″ EST return tube
F	1	10-1608-01	Element return plate

RETURN TUBE ASSEMBLY (continued)

Install the element return mounting plate (PN 10-1608-01). Use four of the 2" aluminum saddles (PN 1601-22), 5/16" x 3-1/2" hex head bolts (PN 60-0065) and 5/16" Nylock nuts (PN 60-0046) as shown in figure 3.52. Tighten the nuts, but leave loose enough to adjust for the center-to-center measurement. Again using four of the 2" aluminum saddles, 5/16" x 3-1/2" hex head bolts, and Nylock nuts, loosely install the return tube saddles as shown in figure 3.53.

Insert the element return tube (PN 10-1630-21). Be sure that the return tube is protruding out approximately 2.25 inches away from the aluminum saddle edge on each side as shown in figure 3.54. Be sure to position the slotted portion of the stress relief tube so that if faces downward as shown in figure 3.55 Tighten the saddles to a maximum of 7 ft lb (9.5N-m). This is very important. The aluminum saddles can crush the fiberglass tubes if the saddles are too tight.

Measure 30 inches from the center-point of the Driven EHU to the center-point of the element return tube as shown in figure 3.56. Level the return bracket assembly as shown in figure 3.57 and tighten the saddle bolts firmly. Do not forget to use anti-seize on all stainless steel fasteners, and also remember to install a set screw into each saddle pair (one set screw per saddle pair).

FIG. 3.52

FIG. 3.53

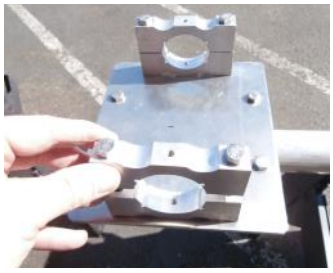

FIG. 3.54

FIG. 3.55

FIG. 3.56

FIG. 3.57

RETURN TUBE ASSEMBLY (continued)

Locate the 1-3/4" x 66-3/8" element support tube (PN 70-2028-01). Measure 6 inches from the flush end of the element support tube (EST) and mark with a felt pen as shown in figure 3.58. Repeat for the other EST.

Insert the EST end into the stress relief tube as shown in figure 3.59. Position the EST so that the mark you made is flush with the stress relief tube as shown in figure 3.60. Repeat for the other EST. Be sure that the stress relief tube is centered on the return plate. The end of the tube should be 2.25 inches from the aluminum saddle on each end of the return plate as shown in figure 3.61. Tighten the saddles to no more than 7 ft lbs.

Figure 3.62 and figure 3.63 show the completed Driven element. It is a good idea to place the EST's on sawhorses as shown in figure 3.64. This will stabilize the boom as you continue with construction of the antenna.

FIG. 3.58

FIG. 3.59

FIG. 3.60

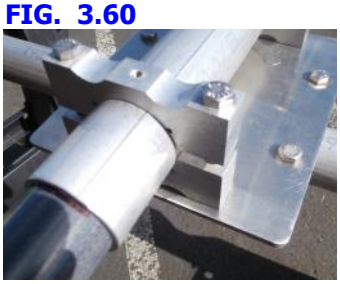

FIG. 3.61

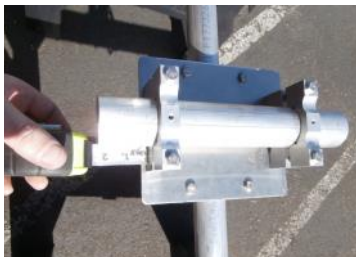

FIG. 3.62

FIG. 3.63

FIG. 3.64

REFLECTOR EHU OVERVIEW DRAWING

Figure 4.01 shows an overview of the Reflector EHU assembly, which is covered in more detail on the following pages.

FIG. 4.01

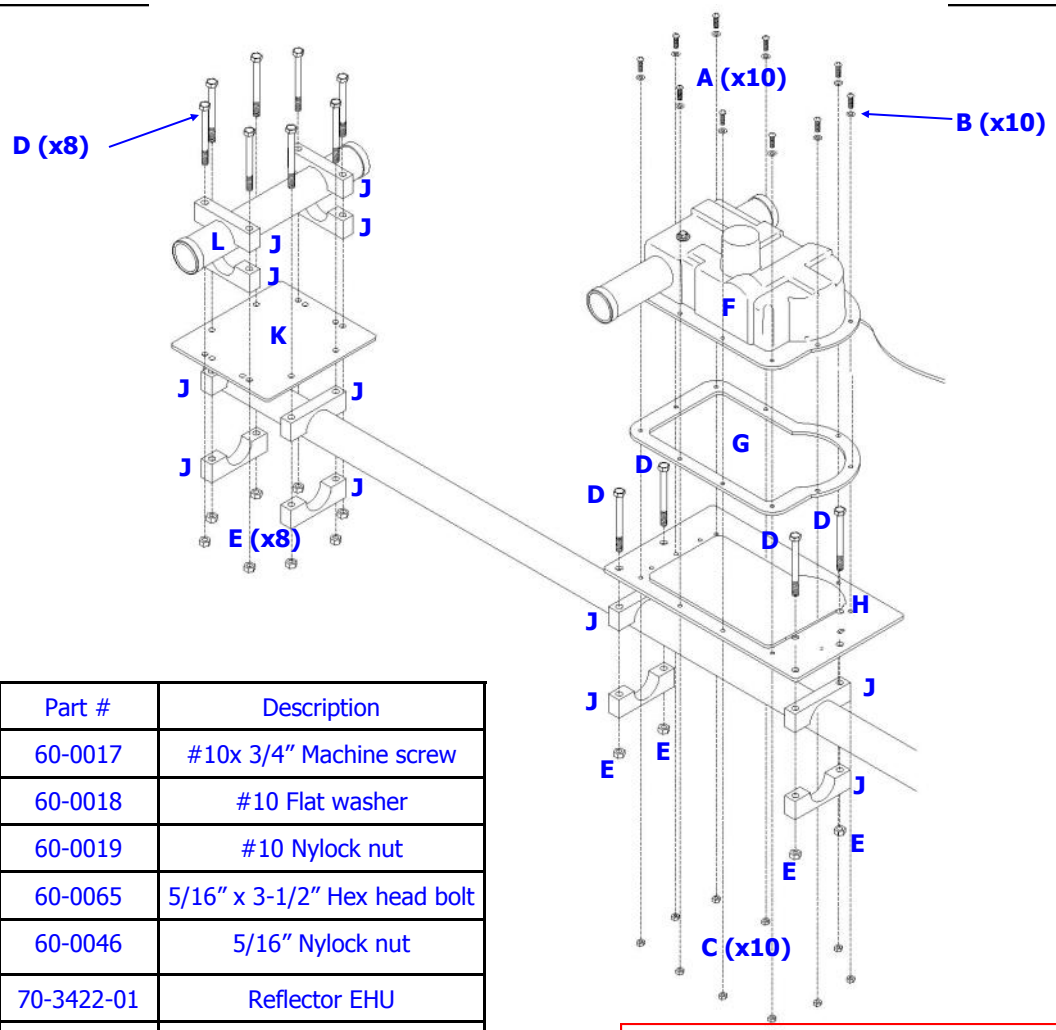

Key	QTY	Part #	Description
A	10	60-0017	#10x 3/4" Machine screw
B	10	60-0018	#10 Flat washer
C	10	60-0019	#10 Nylock nut
D	12	60-0065	5/16" x 3-1/2" Hex head bolt
E	12	60-0046	5/16" Nylock nut
F	1	70-3422-01	Reflector EHU
G	1	10-1502-12	Element housing gasket
H	1	70-2030-11	Element mounting plate
J	12	10-1601-03	1-3/4" Aluminum saddle half
K	1	10-1608-01	Element return plate
L	1	10-1015-11	EST Return tube

ATTENTION!

Extra brackets used in this section if installing the 80m dipole. Refer to the 80m dipole instructions for further detail.

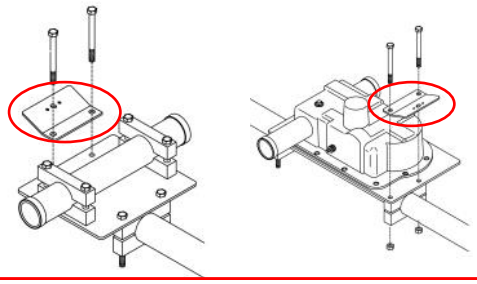

RETURN TUBE ASSEMBLY—REFLECTOR

Install the element return mounting plate (PN 10-1608-01). Use four of the 1-3/4" aluminum saddles (PN 10-1601-03), 5/16" x 3-1/2" hex head bolts (PN 60-0065) and 5/16" Nylock nuts (PN 60-0046) as shown in figure 4.01. Tighten the nuts, but leave loose enough to adjust for the center-to-center measurement. Again using four of the 1-3/4 aluminum saddles, 5/16" x 3-1/2" hex head bolts, and Nylock nuts, loosely install the return tube saddles as shown in figure 4.02.

Insert the element return tube (PN 10-1015-11) as shown in figure 4.03. Be sure that the return tube is protruding out approximately 2.25 inches away from the aluminum saddle edge on each side, as shown in figure 4.04. Tighten the saddles to a maximum of 7 ft lb (9.5Nm). This is very important. The aluminum saddles can crush the fiberglass tubes if the saddles are too tight. DO NOT put a set screw in the aluminum saddles that are used on the fiberglass return tube material.

Measure 3-7/8" from the left edge of the boom to the center-point of the return tube as shown in figure 4.05. Level the return bracket assembly as shown in figure 4.06 and tighten the saddle bolts so that the return plate cannot move, but leave loose enough for center-point to center-point measurement in the next portion of the instructions. Do not forget to use anti-seize on all stainless steel fasteners, and also remember to install a set screw into each saddle pair (one set screw per saddle pair).

FIG. 4.01

FIG. 4.02

FIG. 4.03

FIG. 4.04

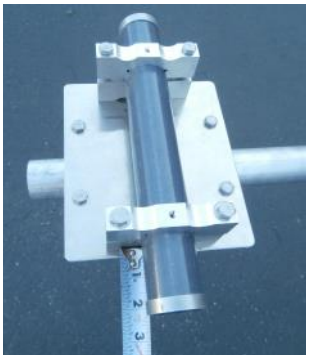

FIG. 4.05

FIG. 4.06

MOUNT THE REFLECTOR EHU ONTO THE BOOM

Refer to the center-to-center measurements in Chapter Two when installing each of the EHU's and mounting plates to the boom. The EHU should already be wired before placing it on the aluminum mounting plate. Position the aluminum mounting plate (PN 10-1015-11) and align the 1-3/4" aluminum saddle halves (PN 10-1601-03) as shown in figure 4.10. Insert the 5/16" x 3-1/2" hex head bolts (PN 60-0065) and thread on the 5/16" Nylock nuts (PN 60-0046). Insert a set screw on the exposed side of the aluminum saddle. Tighten, but allow the mounting plate to be loose enough for adjusting the center-to-center measurement. Be sure to use anti-seize on all stainless steel fasteners.

Place the EHU gasket (PN 10-1502-01) onto the mounting plate as shown in figure 4.11. Note that only the Driven element has an independent lid, the rest of the EHU's use the element mounting bracket as the "lid". Align the gasket with the holes on the mounting plate. Place the Reflector EHU (PN 70-3422-01) onto the mounting plate as shown in figure 4.12 and attach using the #10 x 3/4" machine screws (PN 60-0017), #10 flat washers (PN 60-0018) and #10 Nylock nuts (PN 60-0019) as shown in figure 4.13. Be sure that the flat washer is between the machine screw head and the EHU housing as shown in figure 4.14 . Tighten the Nylock nuts enough to compress the gasket material but do not over tighten or you can crack the plastic EHU housing.

Measure the proper distance from the center-point of the return tube to the center-point of the element (30.0 inches) as shown in figure 4.15. *(A tip from Adam Blackmer K7EDX, SteppIR operations manager— use the mold spline located on the EHU housing as a place to hold your tape measure edge when measuring center-to-center as shown in figure 4.16.* Level the EHU as shown in figure 4.17 and tighten the aluminum saddles firmly. Figure 4.18 shows the completed Reflector EHU and return tube.

FIG. 4.10

FIG. 4.11

FIG. 4.12

FIG. 4.13

FIG. 4.14

FIG. 4.15

FIG. 4.16

FIG. 4.17

FIG. 4.18

DIRECTOR ONE EHU OVERVIEW DRAWING

Figure 5.01 shows an overview of the Director 1 EHU assembly, which is covered in more detail on the following pages.

FIG. 5.01

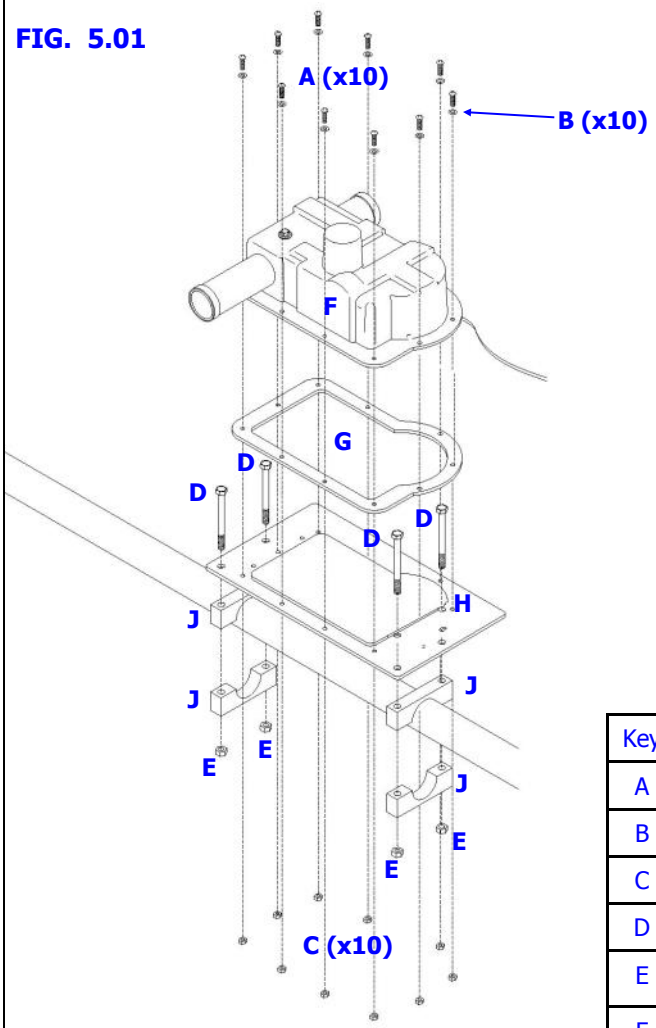

Key	QTY	Part #	Description
A	10	60-0017	#10x 3/4" Machine screw
B	10	60-0018	#10 Flat washer
C	10	60-0019	#10 Nylock nut
D	4	60-0114	5/16"x 3-3/4" Hex head bolt
E	4	60-0046	5/16" Nylock nut
F	1	70-3420-01	Director 1 EHU
G	1	10-1502-12	Element housing gasket
H	1	70-2030-11	Element mounting plate
J	4	10-1601-32	2-1/4" Aluminum saddle half

MOUNT THE DIRECTOR 1 EHU ONTO THE BOOM

Refer to the center-to-center measurements in Chapter Two when installing each of the EHU's and mounting plates to the boom. The EHU should already be wired before placing it on the aluminum mounting plate.

Position the aluminum mounting plate (PN 10-1015-11) and align the 2-1/4" aluminum saddle halves (PN 10-1601-32) as shown in figure 5.02. Insert the 5/16" x 3-3/4" hex head bolts (PN 60-0114) and thread on the 5/16" Nylock nuts (PN 60-0046). Insert a set screw on the exposed side of the aluminum saddle. Tighten, but allow the mounting plate to be loose enough for adjusting the center-to-center measurement. Be sure to use anti-seize on all stainless steel fasteners.

Place the EHU gasket (PN 10-1502-01) onto the mounting plate as shown in figure 5.03. Align the gasket with the holes on the mounting plate. Place the Director 1 EHU (PN 70-3420-01) onto the mounting plate as shown in figure 5.04 and attach using the #10 x 3/4" machine screws (PN 60-0017), #10 flat washers (PN 60-0018) and #10 Nylock nuts (PN 60-0019) as shown in figure 5.05. Be sure that the flat washer is between the machine screw head and the EHU housing as shown in figure 5.06 . Tighten the Nylock nuts enough to compress the gasket material but do not over tighten or you can crack the plastic EHU housing.

Measure the proper distance (93.25 inches) from the center-point of the Driven element to the center-point of the Director 1 element. *(A tip from Adam Blackmer K7EDX, SteppIR operations manager— use the mold spline located on the EHU housing as a place to hold your tape measure edge when measuring center-to-center as shown in figure 5.07).*

Level the EHU as shown in figure 5.08 and tighten the aluminum saddles firmly. Figure 5.09 shows the completed Reflector EHU and return tube.

FIG. 5.02

FIG. 5.03

FIG. 5.04

FIG. 5.05

FIG. 5.06

FIG. 5.07

FIG. 5.08

FIG. 5.09

DIRECTOR 2 EHU OVERVIEW DRAWING

Figure 6.01 shows an overview of the Director 2 EHU assembly, which is covered in more detail on the following pages.

FIG. 6.01

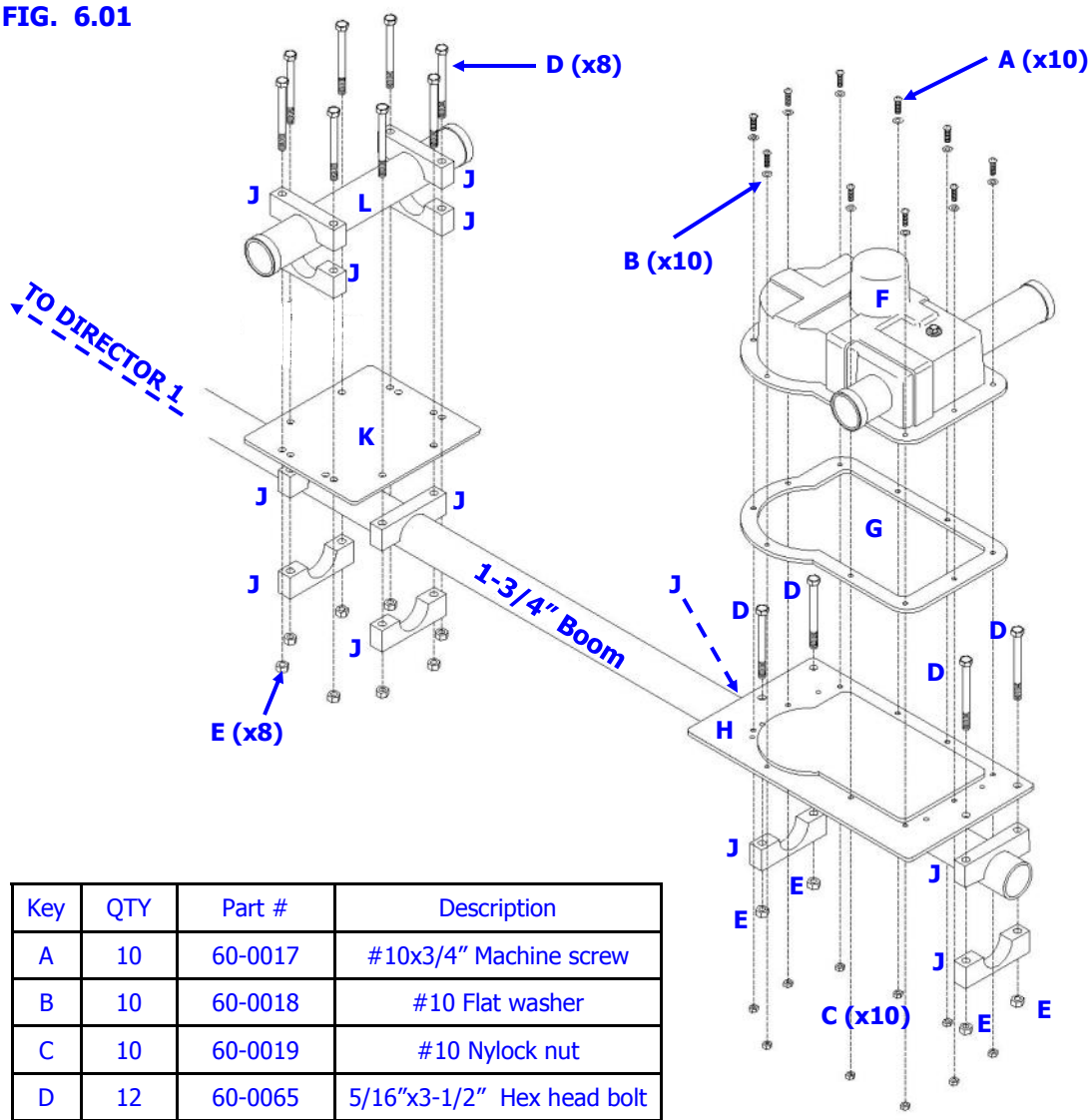

Key	QTY	Part #	Description
A	10	60-0017	#10x3/4" Machine screw
B	10	60-0018	#10 Flat washer
C	10	60-0019	#10 Nylock nut
D	12	60-0065	5/16"x3-1/2" Hex head bolt
E	12	60-0046	5/16" Nylock nut
F	1	70-3422-01	Director 2 EHU
G	1	10-1502-01	Element housing gasket
H	1	70-2030-11	Element mounting plate
J	12	10-1601-22	1-3/4" Aluminum saddle half
K	1	10-1608-01	Element return plate
L	1	10-1015-11	EST Return tube

ATTENTION!
Extra bracket used in this section if installing the 80m dipole. Refer to the 80m dipole instructions for further detail.

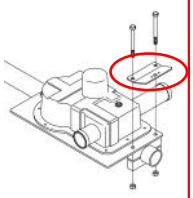

MOUNT THE DIRECTOR 2 EHU ONTO THE BOOM

Refer to the center-to-center measurements in Chapter Two when installing each of the EHU's and mounting plates to the boom. The EHU should already be wired before placing it on the aluminum mounting plate.

Position the aluminum mounting plate (PN 10-1015-11) and align the 1-3/4" aluminum saddle halves (PN 10-1601-03) as shown in figure 6.02 . Insert the 5/16" x 3-1/2" hex head bolts (PN 60-0065) and thread on the 5/16" Nylock nuts (PN 60-0046). Insert a set screw on the exposed side of the aluminum saddle. Tighten, but allow the mounting plate to be loose enough for adjusting the center-to-center measurement. Be sure to use anti-seize on all stainless steel fasteners. Figure 6.03 shows the mounting plate attached to the boom.

Place the EHU gasket (PN 10-1502-01) onto the mounting plate as shown in figure 6.04. Align the gasket with the holes on the mounting plate. Place the Director 2 EHU (PN 70-3422-01) onto the mounting plate as shown in figure 6.05 and attach using the #10 x 3/4" machine screws (PN 60-0017), #10 flat washers (PN 60-0018) and #10 Nylock nuts (PN 60-0019) as shown in figure 6.06. Be sure that the flat washer is between the machine screw head and the EHU housing as shown in figure 6.07 . Tighten the Nylock nuts enough to compress the gasket material but do not over tighten or you can crack the plastic EHU housing.

Measure the proper distance from the center-point of the element to the right edge of the boom (4.375 inches) as shown in figure 6.08. Be sure to check your center-to-center measurements from the Director 1 EHU to the Director 2 EHU (171.75 inches). Level the EHU as shown in figure 6.09 and tighten the aluminum saddles firmly.

FIG. 6.02

FIG. 6.03

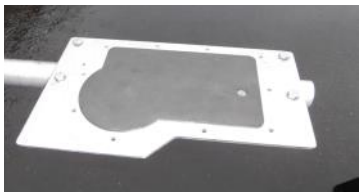

FIG. 6.04

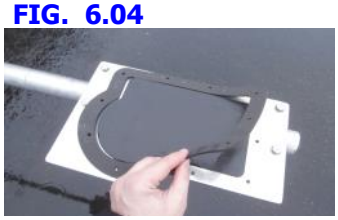

FIG. 6.05

FIG. 6.06

FIG. 6.07

FIG. 6.08

FIG. 6.09

RETURN TUBE ASSEMBLY—DIRECTOR 2

Install the element return mounting plate (PN 10-1608-01). Use four of the 1-3/4" aluminum saddles (PN 10-1601-03), 5/16" x 3-1/2" hex head bolts (PN 60-0065) and 5/16" Nylock nuts (PN 60-0046) as shown in figure 6.10. Tighten the nuts, but leave loose enough to adjust for the center-to-center measurement. Figure 6.11 shows the return tube mounting bracket attached to the boom. Again using four of the 1-3/4 aluminum saddles, 5/16" x 3-1/2" hex head bolts, and Nylock nuts, install the return tube saddles as shown in figure 6.12. The saddles should remain loose, with the Nylock nuts threaded on just a couple of turns as shown in figure 6.13.

Insert the element return tube (PN 10-1015-11) as shown in figure 6.14. Be sure that the return tube is protruding out approximately 2.25 inches away from the aluminum saddle edge on each side, as shown in figure 6.15. Tighten the saddles to a maximum of 7 ft lb (9.5Nm). This is very important. The aluminum saddles can crush the fiberglass tubes if the saddles are too tight. DO NOT put a set screw in the aluminum saddles that are used on the fiberglass return tube material.

Measure 30" from the center-point of Director 2 as shown in figure 6.16. Level the return bracket assembly as shown in figure 6.17 and tighten the saddle bolts firmly. Do not forget to use anti-seize on all stainless steel fasteners, and also remember to install a set screw into each saddle pair (one set screw per saddle pair).

Figure 6.18 shows the completed Director 2 EHU and return assembly.

FIG. 6.10

FIG. 6.11

FIG. 6.12

FIG. 6.13

FIG. 6.14

FIG. 6.15

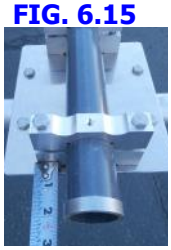

FIG. 6.16

FIG. 6.17

FIG. 6.18

MAST PLATE ASSEMBLY OVERVIEW

When attaching the mast plate, use clamps or cord to secure the boom in place onto the sawhorses or whatever structure you are using to support the boom. By doing this, you are "locking" the boom into a level position, which will make the leveling of the mast plate much easier.

The DB36 employs a special system, called the EZ-Eye, for both mounting and leveling the boom. The EZ-Eye is also used in preventing the boom from shifting during high winds.

Figure 7.01 shows an exploded drawing of the boom and mast plate assembly, along with the EZ-Eye system. This parts explosion is a useful referral tool as you complete the steps in this section.

FIG. 7.01

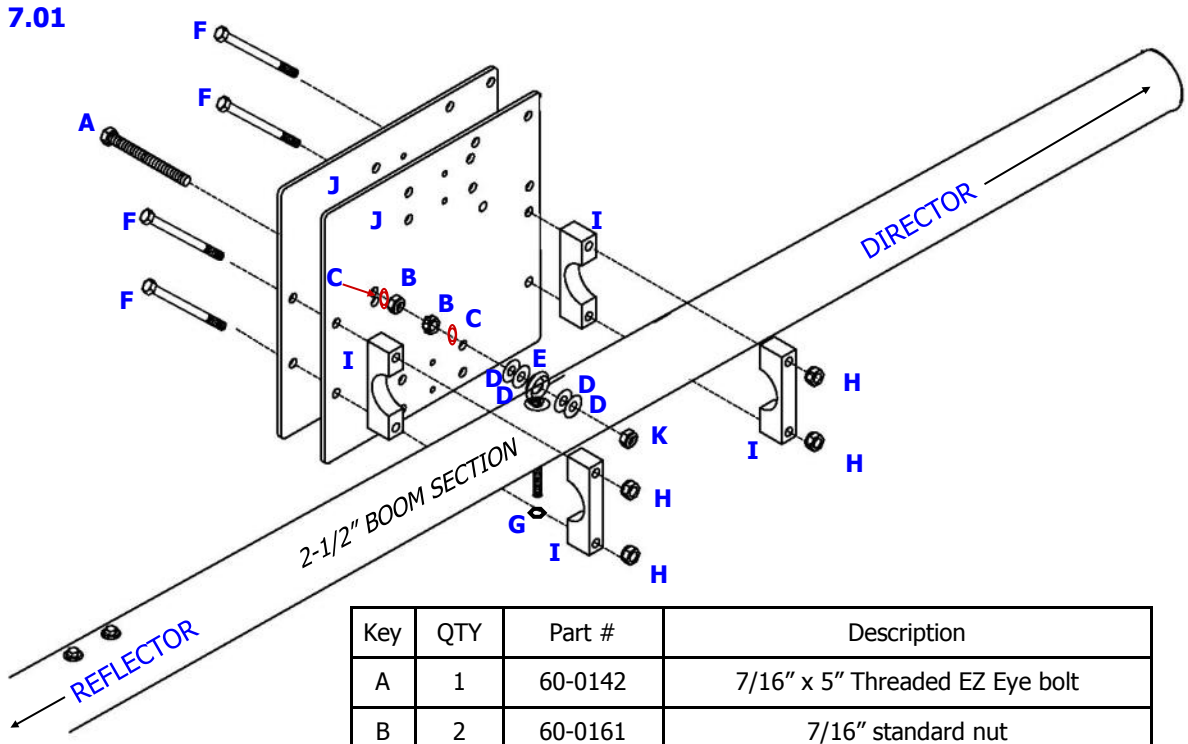

Key	QTY	Part #	Description
A	1	60-0142	7/16" x 5" Threaded EZ Eye bolt
B	2	60-0161	7/16" standard nut
C	2	60-0160	7/16" Lock washer
D	4	60-0034	7/16" Galvanized washer
E	1	60-0145	3/8" Stainless steel EZ Eyebolt
F	4	60-0115	5/16" x 4-1/2" Hex head bolt
G	1	60-0050	3/8" Nylock nut
H	4	60-0046	5/16" Nylock nut
I	4	10-1601-41	2-1/2" Aluminum saddle half
J	2	10-1610-23	11-1/2" Aluminum mast plate
K	1	60-1043	7/16" Nylock nut

ATTACH THE MAST PLATE TO THE BOOM

Locate the 7/16" X 5" threaded bolt (PN 60-0142). LIBERALLY apply anti-seize to this bolt as shown in figure 7.02. Note there is lubricant applied to four sections of the bolt. If you do not do this, the bolt will likely gall. For information on galling, see the Preamble section of this manual.

To be sure your mast plate is oriented properly, refer to figure 7.03. When looking at the boom (meaning that you can visually SEE the boom with the mast plate behind it) as it is mounted on the mast plate, these 4 holes should be on the upper right side.

Insert the 7/16" x 5" threaded bolt through the two identical mast plates (PN 10-1610-22) as shown in figure 7.04. Secure with the 7/16" standard nut (PN 60-0161) and 7/16" lock washer (PN 60-0160) as shown in figure 7.05. Tighten firmly.

Thread the second 7/16" standard nut onto the bolt until there is approximately 3/4" of clearance between the two standard nuts as shown in figure 7.06.

FIG. 7.02

FIG. 7.03

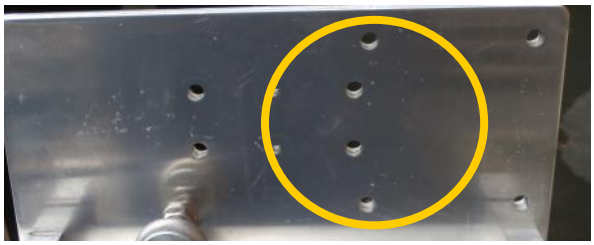

FIG. 7.04

FIG. 7.05

FIG. 7.06

ATTACH THE MAST PLATE TO THE BOOM (continued)

Slide the 5/16" x 4-1/2" hex head bolts (PN 60-0115) into the mast plate, and place the first half of the 2 inch aluminum saddles (PN 10-1601-61) onto the bolts as shown in figure 7.07. Place two 7/16" lock washers (PN 60-0160) and two 7/16" galvanized washers (PN 60-0144) onto the EZ-Eye threaded bolt in the orientation shown in figure 7.08, BEFORE inserting the threaded bolt into the EZ-Eye. Position the mast plate to the boom, sliding the 5" threaded bolt through the eyebolt as shown in figure 7.09.

Attach the other half of the 2" aluminum saddles and thread on the 5/16" Nylock nuts (PN 60-0046). Tighten the nuts until the boom is snug, but you can still rotate it. Place the remaining two 7/16" flat washers onto the threaded bolt as shown in figure 7.10. Insert a 7/16" Nylock nut onto the 7/16" x 5" threaded bolt as shown in figure 7.11. Tighten the Nylock nut until it is resting near the galvanized washers as shown in figure 7.12.

Use a short level as shown in figure 7.13 and attach a wrench on each of the 3/8" "leveling" nuts as shown in figure 7.14. Adjust the nuts as needed to level the boom to the mast plate. When the mast plate is level with the boom, tighten all of the nuts firmly. Be sure that the 7/16" lock washers have been compressed properly during the tightening process. Install the set screws in the saddles as shown in figure 7.15. Only the exposed half of the saddles will require a set screw. Figure 7.16 shows the completed mast plate assembly.

FIG. 7.07

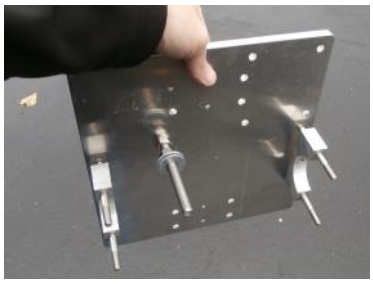

FIG. 7.08

FIG. 7.09

FIG. 7.10

FIG. 7.11

FIG. 7.12

FIG. 7.13

FIG. 7.14

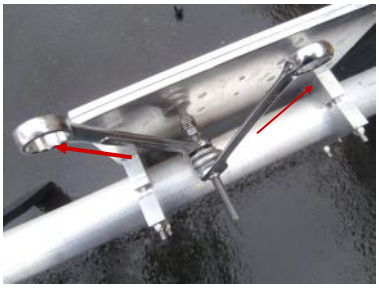

FIG. 7.15

FIG. 7.16

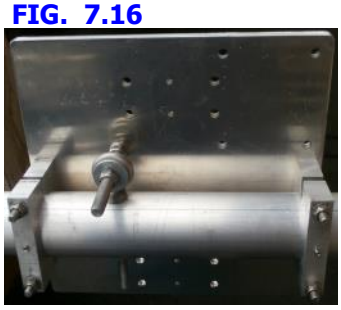

ATTACH THE BOOM TRUSS MAST TO MAST PLATE

Review figure 8.01. Insert four of the 5/16" x 4" hex head bolts (PN 60-0066) so the threads of the bolts are on the boom side of the mast plate as shown in figure 8.02. Insert the 1/4" aluminum spacers (PN 10-1613-11) onto the hex head bolts, followed by the first half of the 1-3/4" aluminum saddle (PN 10-1601-01) as shown in figure 8.03. Position the truss mast (PN 10-1614-41) so that it is resting on the aluminum saddle, then slide the other half of the saddle onto the hex head bolts. Thread on the 5/16" Nylock nuts (PN 60-0046) for the left side of the saddles (when facing the boom), as shown in figure 8.04. The hex head bolts on the right side of the saddles (circled in yellow) are used to install the connector junction box. .

Install the connector junction box on the saddles so that the lid of the junction box opens from the bottom as shown in figure 8.05. Note that there are more details on the connector junction box installation in Chapter Nine. Holding the connector junction box in place, insert the 5/16" Nylock nuts onto the hex head bolts. Turn the truss mast until the upper hole is perpendicular to the boom. Now tighten the 5/16" nuts fully. Figure 8.05 shows the completed truss mast assembly.

FIG. 8.01

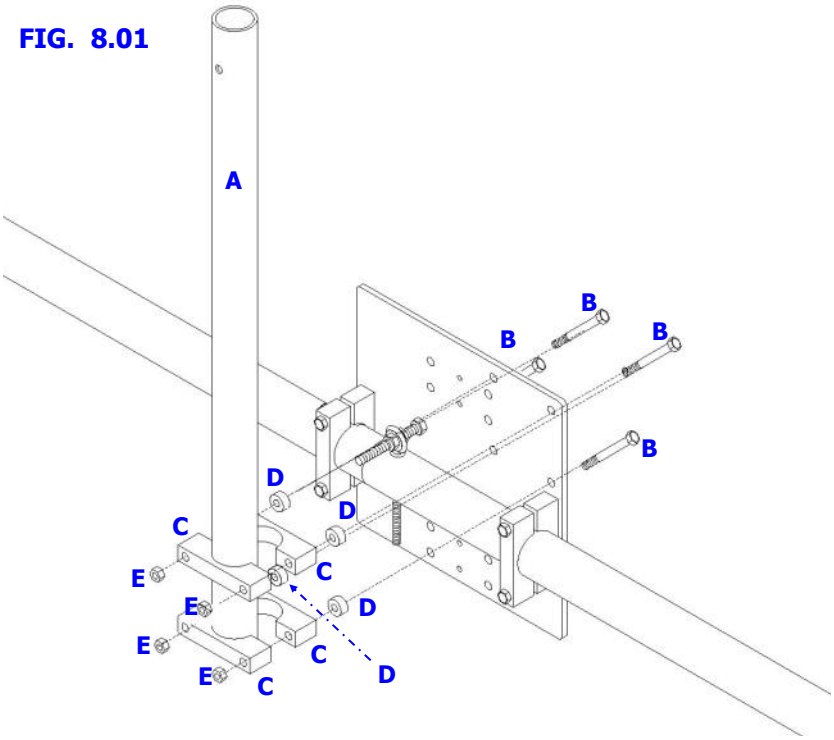

Key	QTY	Part #	Description
A	1	10-1618-41	48" Boom truss mast
B	4	60-0066	5/16" x 4" Hex head bolt
C	4	10-1601-01	1-3/4" Aluminum saddle half
D	4	10-1613-11	1/4" aluminum spacer
E	4	60-0046	5/16" Nylock nut

FIG. 8.02

FIG. 8.03

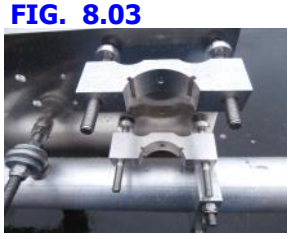

FIG. 8.04

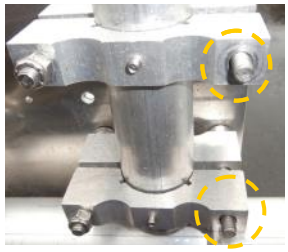

FIG. 8.05

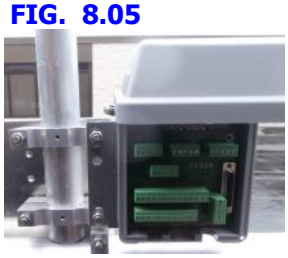

PHILLYSTRAN TRUSS

At the top of the boom truss mast, install the 5/16″ x 3″ bolt and all the 5/16″ and 3/8″ washers to attach the two 5/16″ turnbuckles as shown in Figure 8.10. Install the 5/16″ Nylock nut (PN 60-0046) at the end of the the 5/16″ x 3″ bolt. Tighten the 5/16″ nut so that the turnbuckles are snug against the washers but still can move up and down. Figure 8.11 shows the Phillystran layout with appropriate fasteners. This drawing will be helpful when working through the following section.

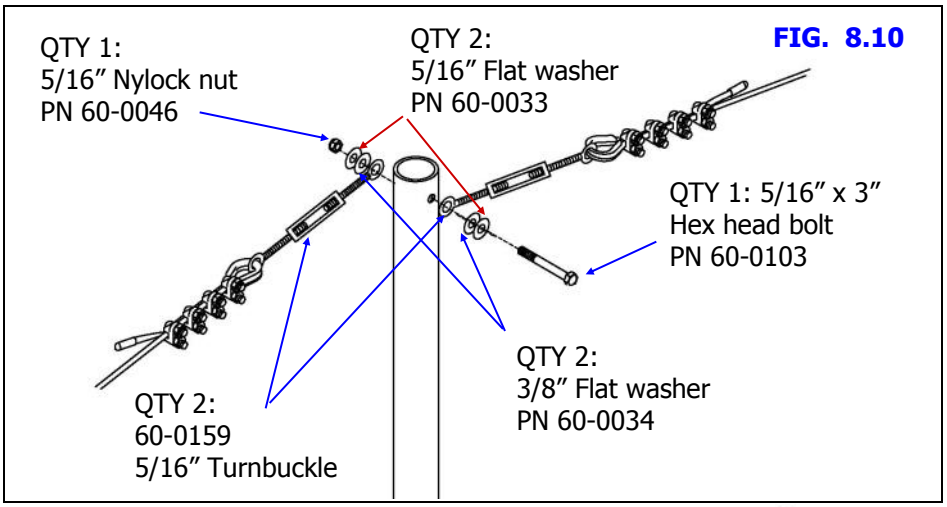

FIG. 8.10

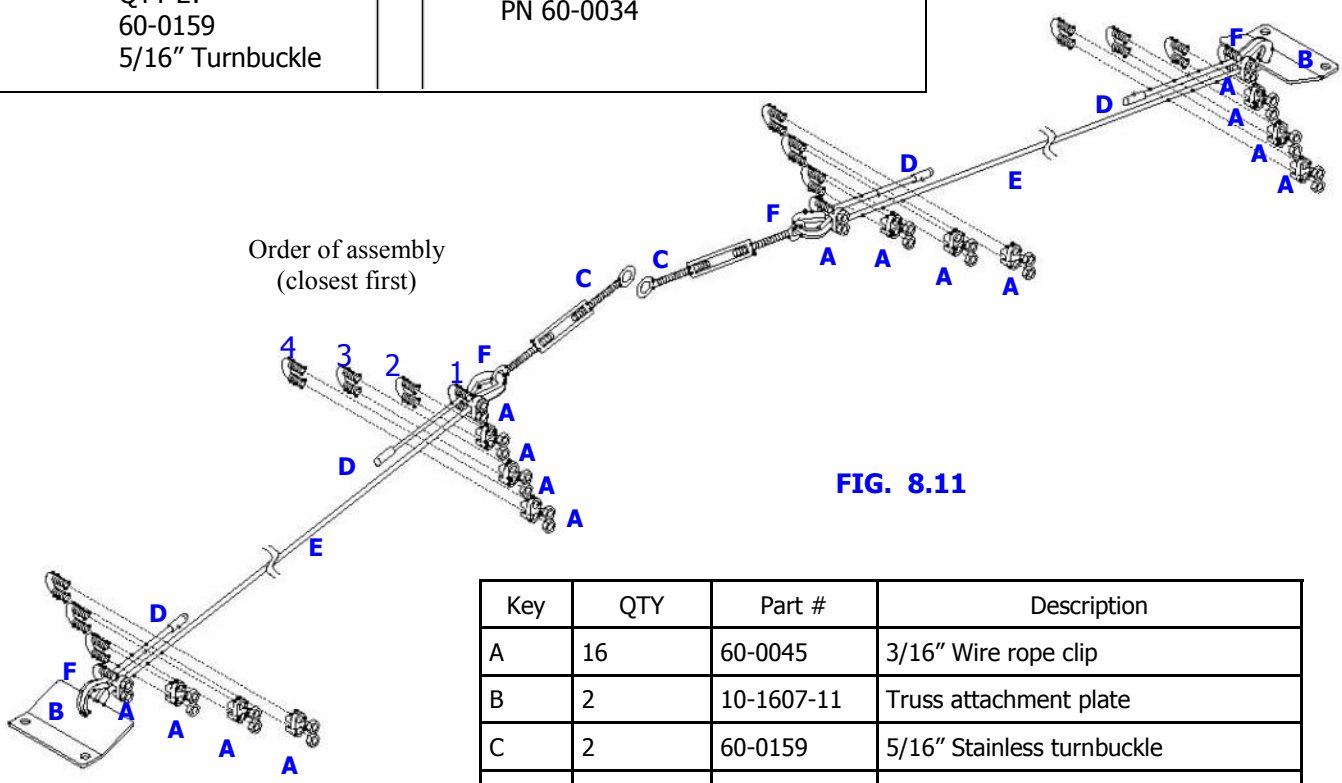

FIG. 8.11

Key	QTY	Part #	Description
A	16	60-0045	3/16″ Wire rope clip
B	2	10-1607-11	Truss attachment plate
C	2	60-0159	5/16″ Stainless turnbuckle
D	4	60-0044	Phillystran end cap
E	30 FT	21-8002	Phillystran 2100I (trim as you go)
F	4	60-0048	3/16″ Wire thimble

PHILLYSTRAN TRUSS (continued)

When securing the Phillystran truss cable, the rule of "don't saddle a dead horse" applies. You must be certain that the saddle portion of the wire clip is on the longer or "live" side of the Phillystran, and the U-bolt section is on the "dead" or (short) side of the Phillystran. Because of this, how you thread the Phillystran through the thimble is important. The lengths of the Phillystran are different on each side of the truss. It is best to "trim as you go", that way you can minimize the opportunity for error.

Locate the truss attachment plate (PN 10-1607-11) and connect to the boom using two 2" aluminum saddle halves (PN 10-1601-22), two 5/16" x 3-1/2" hex head bolt (PN 60-0065) and two Nylock nuts (PN 60-0046). The saddle set for the truss attachment plate goes in between the two bolts of the portion of the boom that transitions from 2" to 1-3/4" as shown in figure 8.12. Position the saddle so that it is about 1/4" from the hex head bolt closest to the mast plate as shown in figure 8.13.

When preparing the Phillystran truss, you will need to bring the Phillystran from below the thimble so that the "dead" side is facing towards the sky. Insert the 3/16" thimble (PN 60-0048) into the middle hole on the truss attachment plate as shown in figure 8.14. Loop the Phillystran around the thimble until approximately 8" of the Phillystran is on the "dead" side as shown in figure 8.15. Figure 8.16 shows how to position the two pieces of Phillystran cable into the wire clip saddle. Position the first of the four wire clips (PN 60-0045) so that the wire clip is as close to the thimble as possible, as shown in figure 8.17. Tighten the wire clip, alternating between each nut so that the tightening force is evenly distributed. Hold each portion of the Phillystran in place while tightening, to ensure that a good mate is formed between the two cables. Wait 20 minutes and tighten some more, as cold-flow of the plastic usually occurs. A great way to do the initial tightening is to use a 7/16" deep socket and hand turn, as shown in figure 8.18. This allows you to get pretty tight and in good position on the two cables before doing the final tightening. Position the next wire clip approximately 1 inch behind the first wire clip and tighten accordingly. Repeat with the remainder of the wire clips as shown in figure 8.19.

Locate the plastic end cap (PN 60-0044) and push it onto the end of the Phillystran as shown in figure 8.20. Secure the Phillystran pieces and the cap at the end of the wire clips with electrical tape. Repeat the above steps for truss on the opposite side of the boom after attaching the Phillystran to the boom truss mast.

FIG. 8.12

FIG. 8.13

FIG. 8.14

FIG. 8.15

FIG. 8.16

FIG. 8.17

FIG. 8.18

FIG. 8.19

FIG. 8.20

ATTACH THE PHILLYSTRAN TRUSS TO THE BOOM TRUSS MAST

First install the 5/16" Turnbuckles onto the boom truss mast as shown in figure 8.10.

When attaching the Phillystran material to the turnbuckle located on the truss support mast, the rule of "don't saddle a dead horse" still applies. You must be certain that the saddle portion of the wire clip is on the longer or "live" side of the Phillystran, and the U-bolt section is on the "dead" or (short) side of the Phillystran. Locate the 3/16" galvanized thimbles (PN 60-0048) and pry the end apart so that it will slide over the eye portion of the turnbuckle. When the thimble is attached, be sure to bend the ends back so that it cannot fall off. Unwind the turnbuckle so that approximately 3/8" of threads are still inside the frame, as shown in figure 8.20. The slack is needed so that you can appropriately tighten the Phillystran once secured to the turnbuckle.
When preparing the Phillystran truss, you will need to bring the Phillystran from below the thimble as you did on the other end of the truss. Loop the Phillystran around the thimble until the Phillystran is as tight as possible. Leave approximately 8" of the Phillystran on the "dead" side as shown in figure 8.21 and trim with a utility knife.
While holding the Phillystran so that it remains tight, position the first of the four wire clips (PN 60-0045) so that the wire clip is as close to the thimble as possible as shown in figure 8.22. Tighten the wire clips, alternating between each nut so that the tightening force is evenly distributed. Hold each portion of the Phillystran in place while tightening, to ensure that a good mate is formed between the two cables. Wait 20 minutes and tighten some more, as cold-flow of the plastic usually occurs. Position the next wire clip approximately 1 inch behind the first wire clip and tighten accordingly. Repeat with the remainder of the wire clips as shown in figure 8.23. Locate the plastic end cap (PN 60-0044) and push it onto the end of the Phillystran as shown in figure 8.24. Secure the Phillystran pieces at the end of the wire clips with electrical tape.

Repeat for the other side of the boom. When both sides are finished, use two adjustable wrenches, one to hold the eye stationary and the other to turn the frame of the eyebolt as shown in figure 8.25. Place a level on the boom as shown in figure 8.26. When the boom is level, tighten the nuts on each end of the frame of the eyebolt so that the eyebolt cannot adjust accidentally once the antenna is in the air. As a secondary measure, weaving wire through the eyebolts and the frame can also prevent the eyebolts from loosening, as shown in figure 8.27.

FIG. 8.20

FIG. 8.21

FIG. 8.22

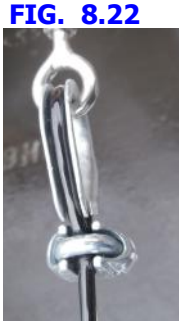

FIG. 8.23

FIG. 8.24

FIG. 8.25

FIG. 8.26

FIG. 8.27

MOUNT THE CONNECTOR JUNCTION BOX ONTO BOOM

The connector junction box is the "hub" for all wiring. It has a hinged cover, which allows for easy access inside. Having pluggable connections makes it much easier to access wiring. An added feature is the inclusion of a 25 pin female connector located on the inside of the connector junction box. This makes it convenient to do antenna testing at the install site, as opposed to having to go all the way inside the ham shack to access the electronic controller.

In most cases, the connector junction box will be in "ready to mount" position. There are occasions where you will receive a junction box with the mounting plate in the wrong configuration, due to the many different configurations used for our various antennas. While we try to make sure this does not happen, if it does, the fix is an easy one. Unscrew the #4 Nylock nuts as shown in figure 9.01. You will need a Phillips screwdriver for the other end of the screw, located inside the junction box enclosure. Be careful to avoid damaging the circuit board that the screw rests on when removing the screw. Detach the mounting plate from the junction box and reposition as shown in figure 9.02. Reattach the screws and nuts and tighten.

The connector junction box attaches to the saddle bolts used for mounting the truss mast onto the mast plate as shown in figure 9.03. Position the junction box mounting plate onto the 5/16" hex head bolts and attach the 5/16" Nylock nuts as shown in figure 9.04. The hinged cover needs to open from the bottom, as shown in figure 9.05.

Figure 9.06 shows the connector junction box mounted on the mast plate.

FIG. 9.01

FIG. 9.02

FIG. 9.03

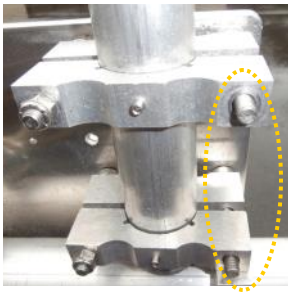

FIG. 9.04

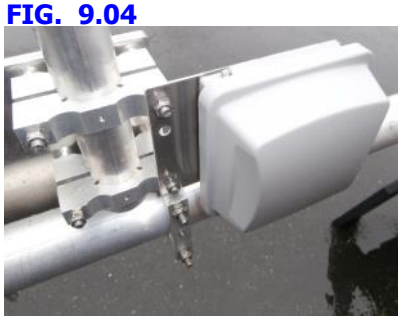

FIG. 9.05

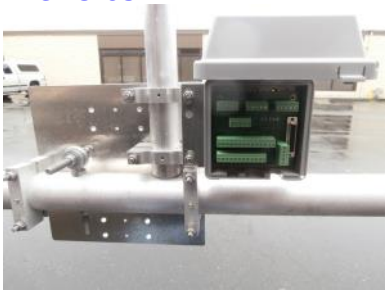

FIG. 9.06

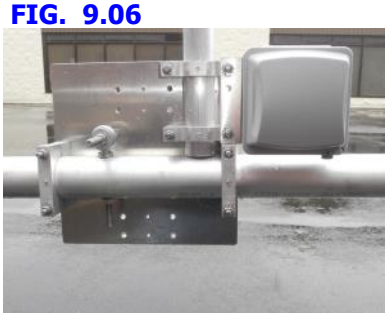

WIRING THE CONNECTOR JUNCTION BOX

Every electrical function is routed through the connector junction box. There are seven junction connections, each of which consists of a female header that is attached to the circuit board inside the box, and a male plug for each as shown in figure 9.10. When we ship the connector junction box, the plugs will already be attached to the female headers and will need to be removed for wiring as shown in figure 9.11. Figure 9.12 shows the connector junction box with the plugs removed.

Table 9.13 identifies each of the connector junctions inside the connector junction box and provides notes for each connection. Also shown is the optional 80m Dipole (J6) wiring—if you do not have the 80m Dipole, DISREGARD the J6 plug.

Note: Figure 9.14, figure 9.15 and figure 9.16 will follow this page. Figure 9.14 shows detailed wiring information for each of the connector junctions inside the box. Be sure to dip each of the exposed wires into the included connector protector before inserting into the terminal strip inside the junction box. Figure 9.15 shows in detail the diagram for connecting the 16 wire control cable to the P1 and P2 plugs inside the junction box. Figure 9.16 shows the wiring for the optional 80m Dipole kit.

FIG. 9.10

FIG. 9.11

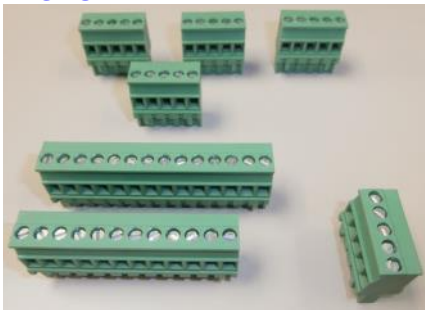

FIG. 9.12

FIG. 9.13

ID	Cable Routed From:	Installation Notes
J1	DRIVEN ELEMENT	4 wire control cable, plus shield wire (all wires used).
J2	DIRECTOR 1	4 wire control cable, plus shield wire (all wires used).
J3	REFLECTOR	4 wire control cable, plus shield wire (all wires used).
J4	DIRECTOR 2	4 wire control cable, plus shield wire (all wires used).
P1	CONTROL CABLE FROM HAM SHACK	The first 12 wires of the 16 the conductor cable used, plus the shield wire.
P2	CONTROL CABLE FROM HAM SHACK	ONLY pins 14, 15, 16 and 17 are used on the P2 junction. The rest are NOT USED.
J6	80m DIPOLE **(optional)**	4 wire control cable; the green and red wire need to be trimmed and taped; Black goes to pin 1, pin 2 and 3 are not used, white goes to pin 3, shield goes to shield (S);

WIRING THE CONNECTOR JUNCTION BOX (continued)

CONNECTOR JUNCTION BOX LAYOUT

FIG. 9.14

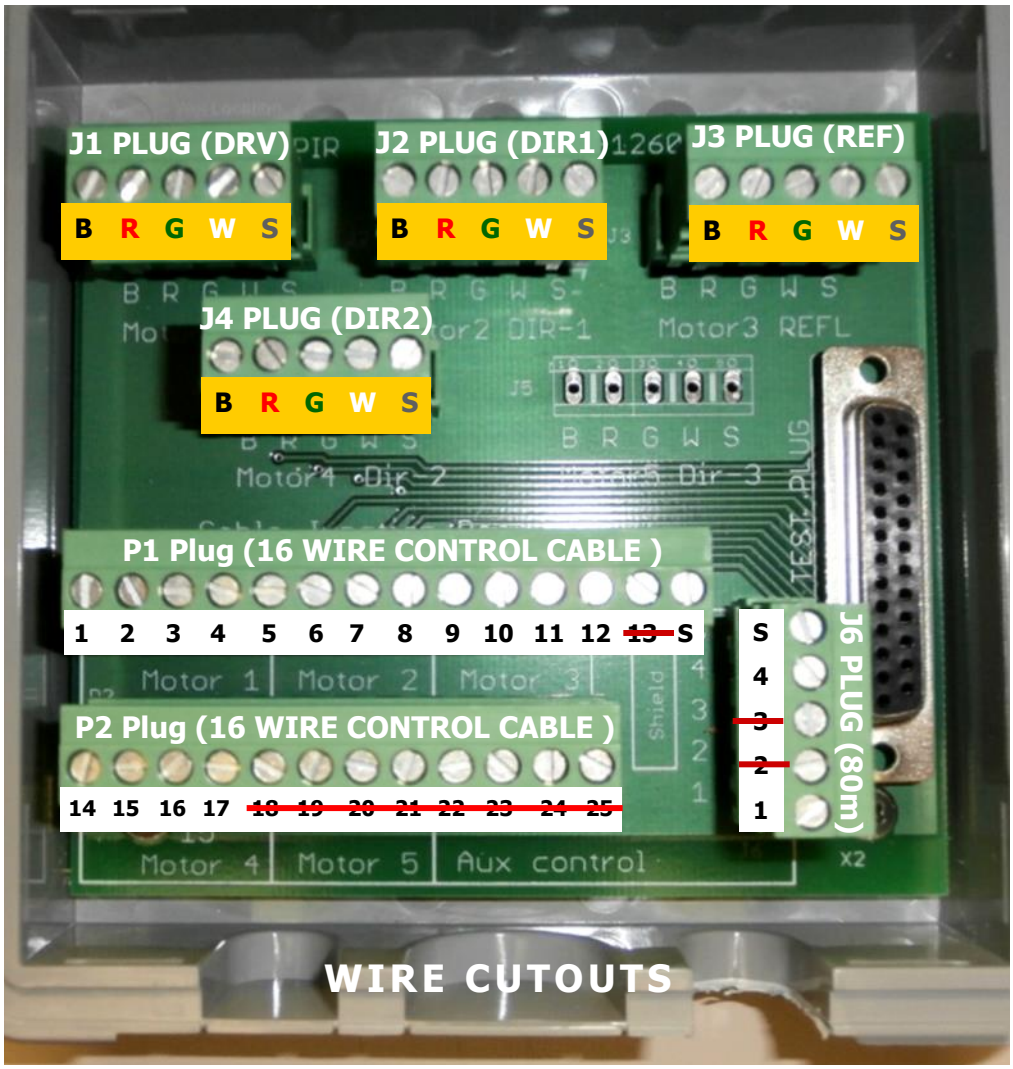

4 wire control cable key

BLACK	RED	GREEN	WHITE	SHIELD

OPTIONAL
80M Dipole (J6)

SHIELD	S	⊘
WHITE	4	⊘
NOT USED	3	⊘
NOT USED	2	⊘
BLACK	1	⊘

WIRING THE CONNECTOR JUNCTION BOX (continued)

CONNECT THE 16 WIRE CONTROL CABLE TO THE JUNCTION BOX

FIG. 9.15

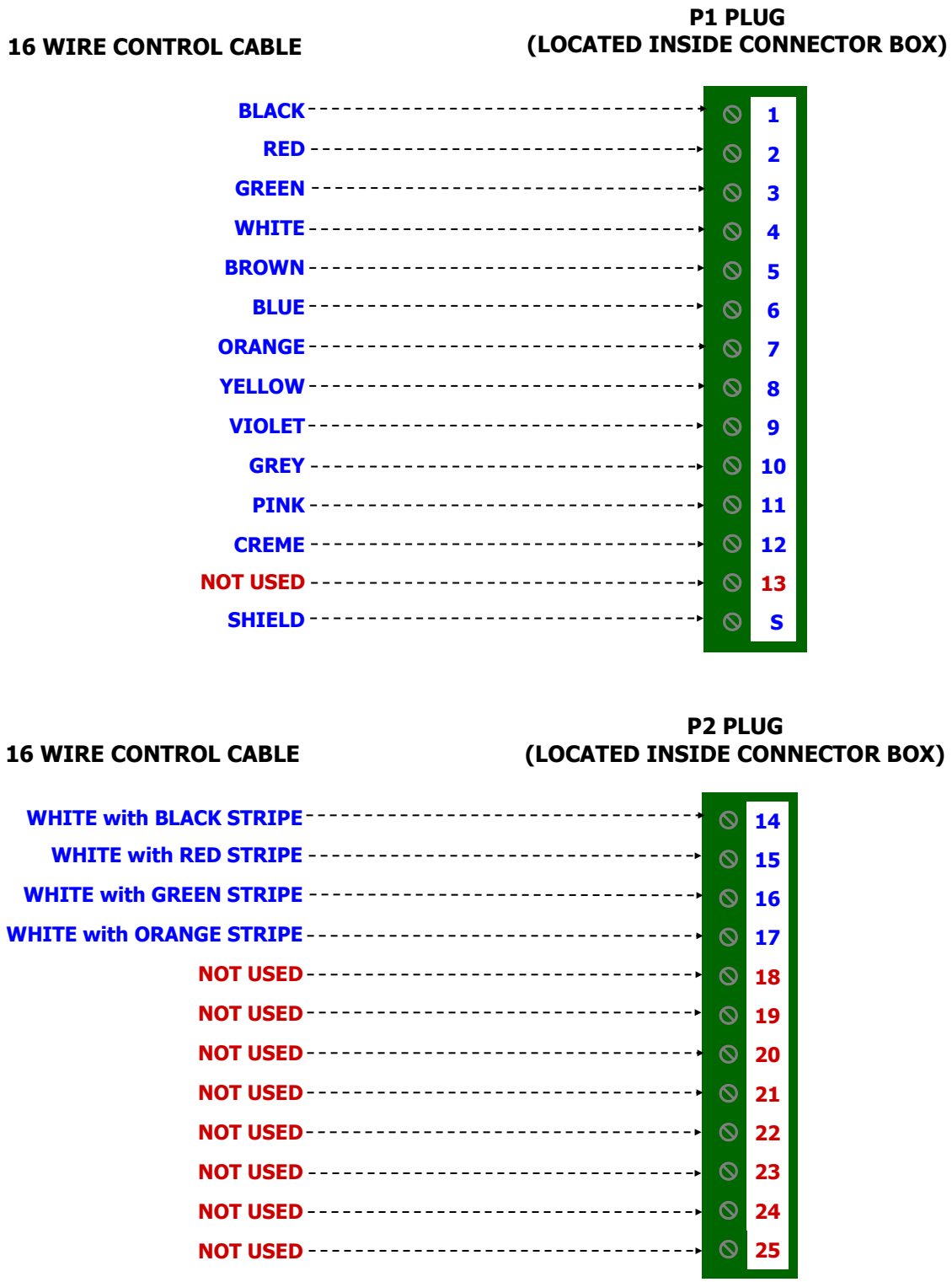

WIRING THE CONNECTOR JUNCTION BOX (continued)

OPTIONAL 80M DIPOLE WIRING SCHEMATIC

FIG. 9.16

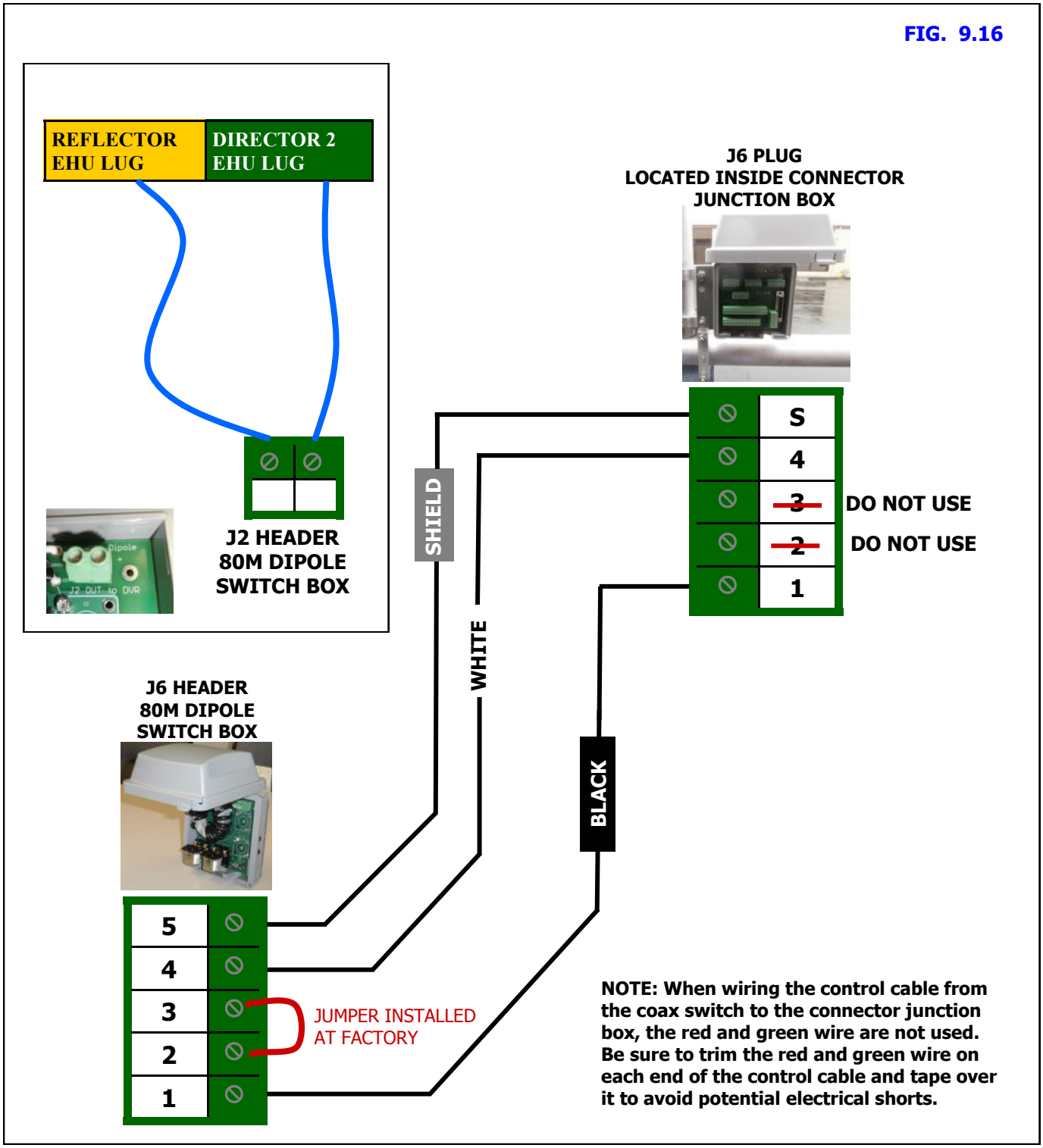

CONNECTING CONTROL CABLE TO DB25 SPLICE

The DB25 control cable splice allows for much more convenient connection of control cable to the SteppIR controller. By utilizing this connector splice, there is no need to cut the DB25 connector off and re-solder when running cable through conduit. In addition, now you can purchase custom cable lengths to within 1 foot of your desired length, eliminating potential for excess cable. To install the DB25 control cable splice, follow these instructions:

1. Locate the parts needed for installation shown in figure 9.20.
2. Strip the grey jacket and aluminum shielding off of the control cable as shown in figure 9.21, approximately 2.75" from end of control cable, being careful not to damage the individual wires. Strip the plastic insulation off of each of the control cable wires, approximately 0.25" in length should be bare wire. It helps to twist each of the stranded wires, to aid in the placing of the wire into the terminal headers. Tinning the wires also works well.
3. Connect each wire to the appropriate terminal as shown in figure 9.22. Consult figure 9.27 on the next page for the correct wiring sequence. Insert the two stainless steel screws into the circuit board. Slide the two plastic spacers onto the screws.
4. Insert the first half of the strain relief clamp onto the two screws (half-round cutout facing upward) on the two screws as shown in figure 9.23. Be careful not to pull the wires out of the terminal headers as you push the strain relief clamp downward.
5. Insert the second half of the strain relief clamp onto the two screws (half-round cutout facing downward as shown in figure 9.24. Position the control cable in between the two halves of the strain relief clamp, be sure that the jacketing of the cable is in between the clamps. Using the nuts, tighten down until the cable is nice and snug, but do not over-tighten.
6. Plug the DB25 splice into the back of the controller and tighten the jack screws to secure the DB25 to the controller housing, as shown in figure 9.25.
7. While it is not required, you may optionally use silicone wrap to cover the wiring, as shown in figure 9.26.

FIG. 9.20

FIG. 9.21

FIG. 9.22

FIG. 9.23

FIG. 9.24

FIG. 9.25

FIG. 9.26

CONNECTING CONTROL CABLE TO dSUB SPLICE

FIG. 9.27

25 PIN DSUB FIELD SPLICE TERMINAL STRIPS (3)

16 WIRE CONTROL CABLE—DB36 NO 80m option
(If you have the 8om dipole option, refer to the separate manual)

FRONT ROW TERMINAL STRIP	1	BLACK
	2	RED
	3	GREEN
	4	WHITE
	5	BROWN
	6	BLUE
	7	ORANGE
	8	YELLOW
	9	VIOLET
MIDDLE ROW TERMINAL STRIP	10	GREY
	11	PINK
	12	CREME
	13	NOT USED
	14	WHITE with BLACK STRIPE
	15	WHITE with RED STRIPE
	16	WHITE with GREEN STRIPE
	17	WHITE with ORANGE STRIPE
	18	NOT USED
BACK ROW TERMINAL STRIP	19	NOT USED
	20	NOT USED
	21	NOT USED
	22	NOT USED
	23	NOT USED
	24	NOT USED
	25	NOT USED
	G	DRAIN
	G	DRAIN (can also be used)

Note: If you are wiring the control cable yourself using a 25 pin connector and backshell instead of using the above dSub field splice, use the same pin numbers shown above. For the 25 pin connector installation, you would solder the ground wire to the case of the 25 pin connector and then put the backshell on.

PREPARE THE TELESCOPING POLES FOR LOOP & NON-LOOP ELEMENTS

Preparing the telescoping pole tips for the 40/30 loop elements

Extend the telescoping poles to full length by firmly "locking" each section of the pole in place. A good methodology is to position each half of the joint so that they are several inches apart (while still within each other), and then pull quickly and firmly. Do this for each pole. There are rubber plugs inside the base section of each telescoping pole. These make it easier for handling, but they **MUST** be removed before measuring the pole lengths. They also need to be removed permanently when attaching the poles to the EHU's.

With poles fully extended, trim the end of the tip element of each pole so that the pole is 212.75 inches (540.4 cm) from the tip of the pole to the butt end, as shown in figure 10.01. Use a hack saw or similar cutting blade that is suitable for fiberglass. Circular pipe cutters used by plumbers work well too.

Using the included conical drill bit, chamfer the ends of the 40/30 poles as shown in figure 10.02. The drawing in figurer 10.03 shows the proper angle to chamfer to. Be sure to clean out the interior of the fiberglass poles before continuing. Debris inside the telescoping poles can lead to failure of the EHU.

Secure polyolefin heat shrink to the telescoping pole joints

On all the telescoping fiberglass elements we now include double wall polyolefin heat shrink (PN 03630). Each telescoping pole uses 3 of the polyolefin heat shrink pieces,. Once finished, the seal is secure and waterproof. This product requires a heat gun for activation of the adhesive. Do not attempt to use a hair dryer for this task. **Note that on the non-loop telescoping poles ONLY, the minimum length when extended must not be less than 213 inches. It is OK if they are longer.** When positioning the heat shrink, place it so that the joint of the telescoping pole is centered in the middle of the heat shrink. Figures 10.04, 10.05, 10.06 and 10.07 below show how this is done.

Using a heat gun (hair dryers will NOT work), apply heat evenly around the entire area of heat shrink. Note: There are 4 blue colored lines imprinted on the tubing. The joint is considered done being heated and waterproof when the lines change color. Each line needs to change in color to ensure even adhesion temperatures.

FIG. 10.01

TRIM THE TIP OF EACH POLE FOR AN OVERALL LENGTH OF 212.75 INCHES

FIG. 10.02

FIG. 10.03

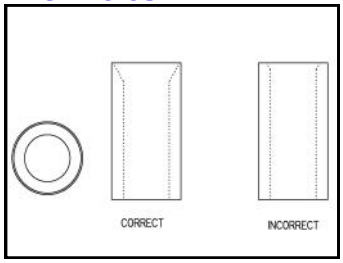

FIG. 10.04

FIG. 10.05

FIG. 10.06

FIG. 10.07

PREPARE THE TELESCOPING POLES (continued)

Preparing the pole tips for insertion into the loops

Prepare each of the 40/30 telescoping poles as shown in figure 10.08 for insertion into the plastic sweeps.
Secure 10 wraps of electrical tape 1.70 inches from the tip, as shown in figure 10.08, Step 1 and step 2. This is used as a measuring stop to be certain you insert the pole in the proper depth. It is important to NEATLY wrap the electrical tape so it has a clean edge.

Cut a 4 inch piece of blue silicone wrap off of the included roll. **Wrap the silicone tape around the pole in a clockwise direction – this is very important**. Try to make the silicone tape wrap so that it is flush with the electrical tape as shown in figure 10.08, Step 3. Firmly pull the silicone tape as you go around the pole. The silicone tape will stick only to itself. This tape is used to form the seal between the pole tip and the plastic sweep tube. The silicone tape will deform as you pull it, to about half it's original width–try to keep the edges as even as possible while you wrap it onto the pole tip.

Wrap the included 3M grip tape around the pole, flush with the edge as shown in figure 10.08, Step 4**.** Be sure there is no overlap of the grip tape – it should be fine from the factory but the OD of poles varies slightly, so if there is overlap, <u>make sure you trim the tape so there is a gap</u>, as shown in figure 10.08, Step 4**.**

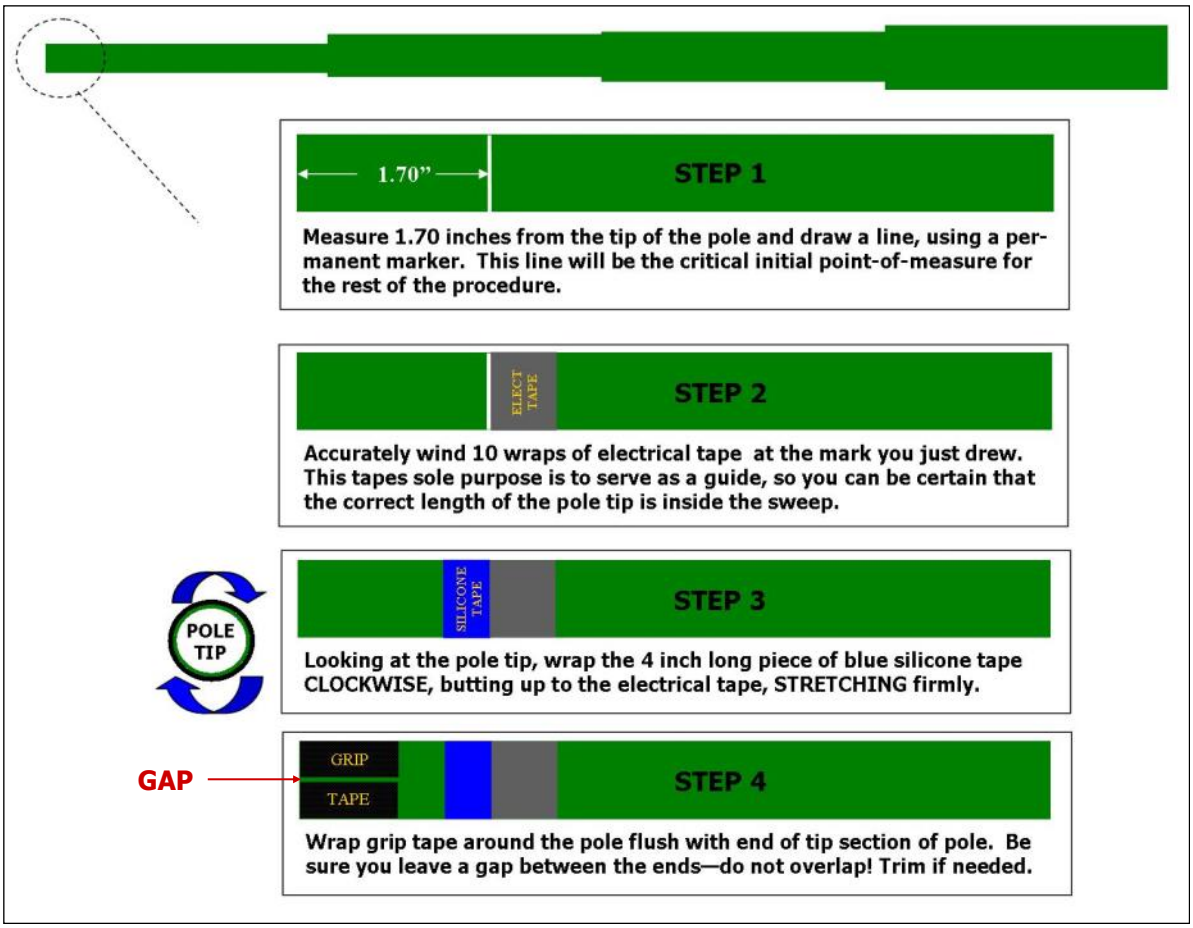

ATTACH THE SWEEP COUPLERS TO THE SWEEP TUBES

Each of the sweep coupler halves will have a notch in the mold on one side. It is **critical** that these notches are pointing towards the sweeps or they will not work properly. See figure 10.10 for the location of the mark. Be certain that each half of the coupler has the mark facing the sweep tube!
Place the coupler halves on the end of the plastic sweep tubing as shown in figure 10.11.

Insert the four 60-0156 #6 x 2" screws. Place the screws so that the threaded portion of the screw is facing downward. BE SURE THAT THE DRAIN HOLES FOR THE PLASTIC SWEEP TUBE ARE POINTING DOWNWARD BEFORE INSTALLING THE COUPLERS. Apply anti-seize to the threads and place the Nylock nuts on. Tighten nuts until there is approximately a 0.25" gap between the two coupler halves as shown in figure 10.12. Repeat for other side of sweep tube.

The couplers are designed to re-form the plastic sweeps to lock them in place – do not be alarmed if there is a need to exert a fair amount of force when tightening the screws, as this is normal.
These screws will be completely tightened later, tightening to this point provides a framework for the ensuing steps.

FIG. 10.10

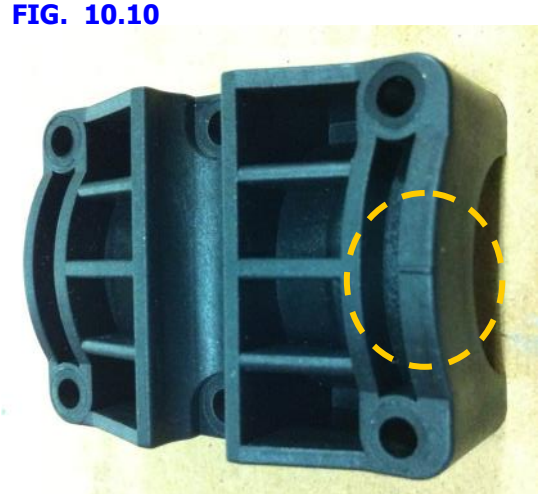

FIG. 10.11

FIG. 10.12

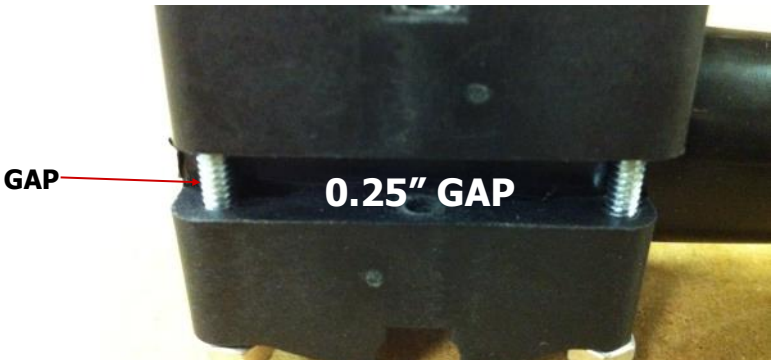

MOUNT THE FIBERGLASS SPREADERS ON THE SWEEP COUPLERS

Mounting the fiberglass spreaders

Attach the black fiberglass sweep spreaders (PN 10-1503-21) to the sweep couplers. There is a concave mounting area on each side of the plastic couplers. Position the fiberglass spreader so that the holes align with the couplers as shown in figure 10.13**.** When installing the fiberglass spreader, you will want the spreader to be underneath the plastic coupler as shown in figure 10.14**.** The loop has been turned upside down in this picture so you can see the detail. The spreaders will be longer than the couplers on each side of the loop as shown in figure 10.15. This is done on purpose to ensure plenty of fiberglass material is on each side of the screw.

Insert #10 x 2" pan-head machine screw (PN 60-0156) through each of the coupler halves and the fiberglass rod. This screw must be placed so that the Philips head of the machine screw is seated inside the concave groove on the top coupler as shown in figure 10.15 and the Nylock nut (PN 60-0014) is secured against the fiberglass material as shown in figure 10.14. The machine screws are longer than normal by design so that you can get the nut on in the initial stages of the process.

Tighten the Nylock nuts firmly. Be sure to use anti-seize on these screws or they very likely will gall and have to be replaced. Repeat the above steps for the remaining sweeps. Figure 10.16 shows a completed sweep assembly.

FIG. 10.13

FIG. 10.14

FIG. 10.15

FIG. 10.16

ATTACH THE FIBERGLASS POLES TO THE SWEEPS

Connecting the telescoping poles to the plastic sweeps
Insert the pole tip into the plastic coupler. If for some reason you cannot get the pole into the plastic sweep, it is probably because the plastic sweep material is too elongated still. This may seem counter-intuitive, but tighten the plastic sweep couplers until the shape at the end becomes more cylindrical as shown in figure 10.20.

As you push the tip inward, turn the pole clockwise in a corkscrew manner as shown in figure 10.21, so that the tape does not unwind or kink during the process. Push the pole until the edge of the electrical tape butts up against the plastic coupler as shown in figure 10.22. It is acceptable for a small amount of blue silicone wrap to protrude outside of the joint, as shown in figure 10.23.

Finish tightening the four screws on the outside corners of the plastic coupler. Tighten evenly, in an automobile X type pattern as shown in figure 10.24 . If you do not tighten evenly, you could potentially break the fastener. Figure 10.25 shows a suggested method for tightening the screws.

When completely tightened, the sweep couplers should touch or almost touch. Similar to figure 10.23.

Figure 6.16 shows a completed sweep. Repeat the same steps for the remaining sweeps.

FIG. 10.20

FIG. 10.21

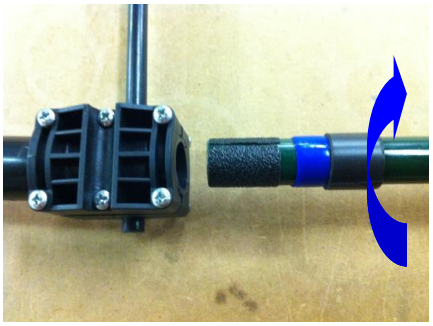

FIG. 10.22

FIG. 10.23

FIG. 10.24

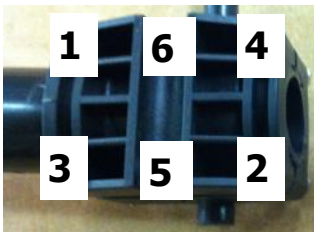

FIG. 10.25

PREPARE THE CPVC INNER-GUIDE TUBE & DIVERTER CONE

The 40/30 loops on the DB36E Yagi use a plastic tube and a diverter cone located inside the telescoping pole, to guide the copper strip out of the EHU. The plastic tube is off-white and is made of CPVC. There are 3 pieces that make up the guide tube assembly: The diverter cone (PN 10-1509-02), the 39-7/8" section of 3/4" CPVC with no coupler (PN 70-2025-23) and the 49" section of 3/4" CPVC with a coupler attached to one end (PN 70-2025-13). The guide tube is not needed on the return side of the loop. Figure 11.01 shows the three pieces in the assembly.

The smaller diameter end of the diverter cone is glued to one end of the 39-7/8" CPVC tube as shown in figure 11.02 . Use the supplied glue and applicator as shown in figure 11.03. Apply the glue evenly around the outside diameter of the tube. Be sure you get even coverage all the way around the tube. Cover about 3/4" of an inch deep as shown in figure 11.03. Firmly push the 39-7/8" CPVC tube into the diverter cone end as shown in figure 11.04. Let the glue dry at least 20 minutes before moving it.

Apply glue evenly around the outside diameter of the 39-7/8" CPVC tube as shown in figure 11.05. Apply approximately 3/4" deep as per prior step. Locate the 49" CPVC tube (PN 70-2025-13) with coupler, as shown in figure 11.06. Push the 39-7/8" tube firmly into the coupler as shown in figure 11.07.

Repeat above instructions for remaining guide tube assembly's (two per EHU, six total).

WARNING: Do not apply glue to the inner "female" portion of either the diverter cone or coupler. The glue applied to the outside of the tube is sufficient to bond the two pieces, and will prevent potential for damaging obstructions being formed by dried glue.

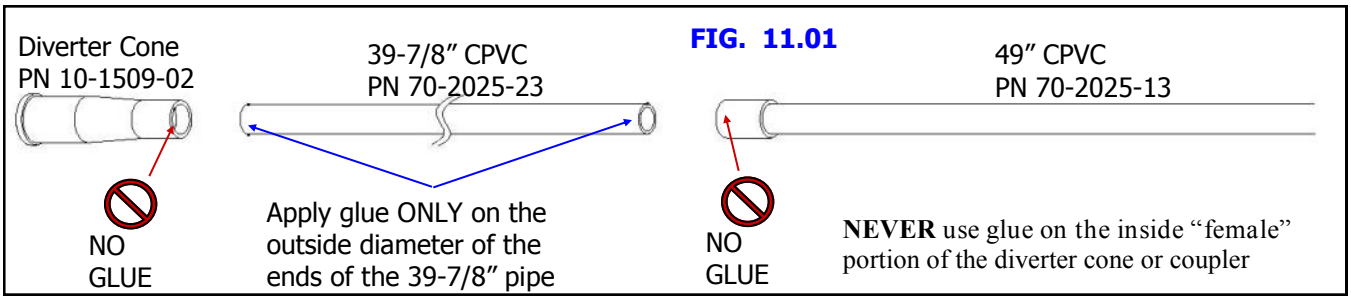

FIG. 11.01

FIG. 11.02

FIG. 11.03

FIG. 11.04

FIG. 11.05

FIG. 11.06

FIG. 11.07

ATTACH THE ELEMENTS TO THE EHU's (continued)

SECURING THE ELEMENT SUPPORT TUBE (EST) TO THE EHU

When the CPVC inner guide tubes are completed, they will need to be inserted into the telescoping poles and secured to each EHU. Figure 11.10 below gives an overview of this procedure, with detailed instructions following on the next page.

This drawing shows the EHU placement for the Reflector element, the procedure is the same for the Director 2 element. The parts required in the table below are shown for EACH complete loop assembly.

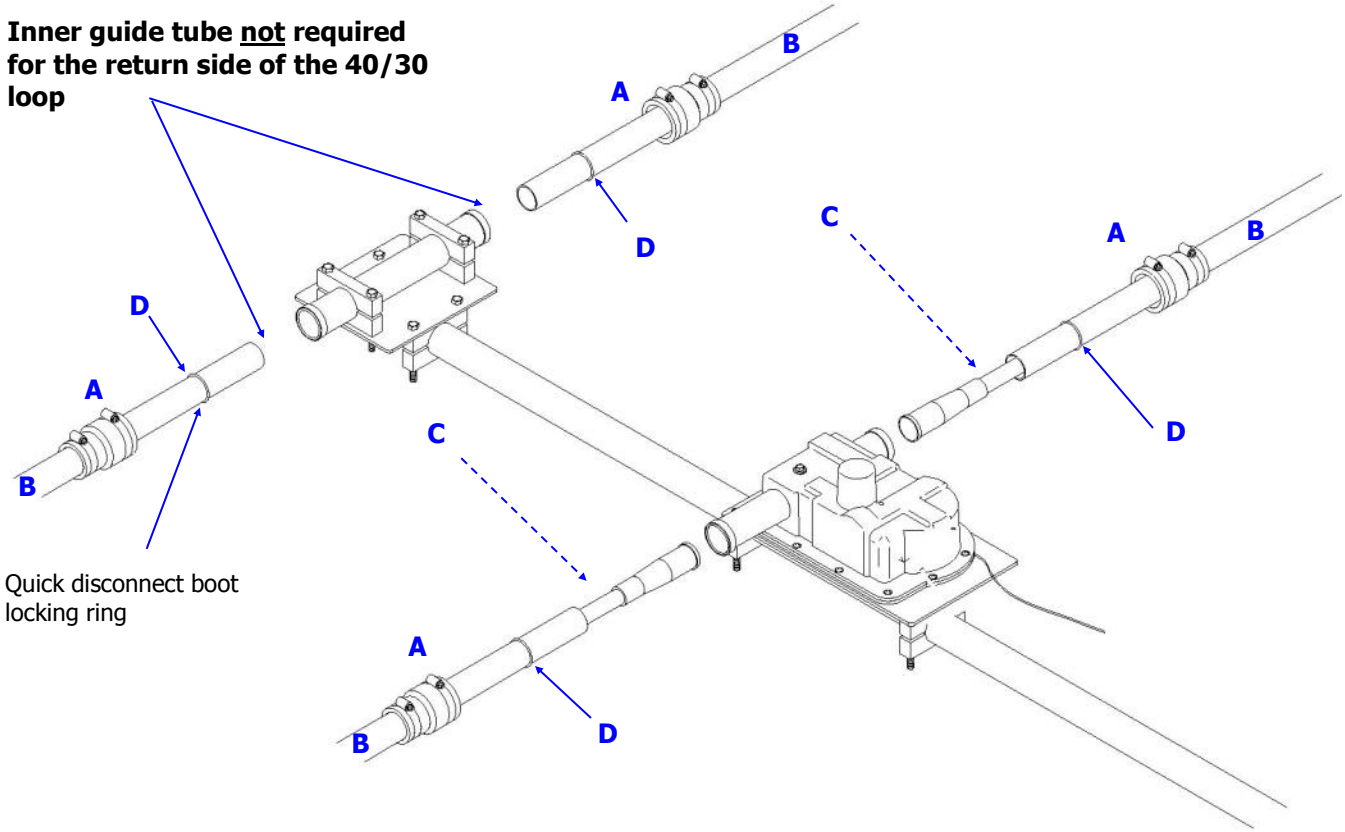

Key	QTY	Part #	Description
A	4	10-1006-22	Quick disconnect boot
B	4	10-1013-02	Telescoping pole
C	2	NA	Inner guide tube assembly consisting of diverter cone , 39-7/8" and 49" CPVC Plastic tube, glued together. They are only used on the EHU side of the 40/30 loop
D	4	NA	Quick disconnect boot locking ring (these are molded into the base section of each telescoping pole and are used to keep the pole from sliding out of the quick disconnect boots in high wind situations)

SECURING THE ELEMENT SUPPORT TUBE (EST) TO THE EHU (continued)

When attaching the telescoping fiberglass poles to each of the EHU's, special care must be taken to ensure that the rubber plugs that are in the base section of each pole are removed before placing the telescoping poles onto the EHU. **Failure to remove these plugs will result in catastrophic failure of the EHU**. Figure 11.11 shows how the plug is in place for shipping purposes. Each end of the DB36 boom has a 40/30 loop for use on 40m as well as the 49 ft loop Driven element, for a total of three elements on 40m/30m . These loops were prepared earlier in the installation process and should look like the one shown in figure 11.12. Be sure to put your quick disconnect boot (PN 10-1006-22) onto the pole before inserting into the EHU.

The CPVC inner guide tube is inserted into the EHU side of the loop assembly as shown in figure 11.13. A close up view of this assembly is shown in figure 11.14. The guide tube is not required for the non-EHU side of the loop (commonly called the return tube). Insert the guide tube so that the edge of the diverter cone is flush with the base of the telescoping pole as shown in figure 11.15. Slide the pole base and guide tube into the EHU tube until it bottoms out firmly as shown in figure 11.16. There may a small portion of unpainted pole protruding. This is OK as it is shielded from the sun by the quick disconnect boot. There is a raised area called a locking ring that is molded onto the base section of each of the telescoping poles. These are there so that the quick disconnect boot cannot "slide" off in the event of high winds. Figure 11.16 shows the locking ring. Align the telescoping pole on the return tube side of the loop. Insert the end firmly into the return tube as shown in figure 11.17.

Before tightening the quick disconnect boots, twist the base sections of the telescoping poles until the loop portion of the element is as level as possible, as shown in figure 11.18. Chapter Twelve shows this leveling process in greater detail, specifically figures 12.29, 12.30 and 12.31 . Tighten the quick disconnect boots firmly. Wait 20 minutes and tighten again—the flexible material will tend to cold flow initially. It is also a good idea to do a final tightening of all the quick disconnect boots and all fasteners as a last step before mounting the antenna onto the tower mast. Repeat above steps for the other half of the loop. The installation pictures below represent the Reflector element. Repeat the above steps for Director 2. The instructions are exactly the same with the exception of the orientation of the EHU and return tube.

FIG. 11.11

FIG. 11.12

FIG. 11.13

FIG. 11.14

FIG. 11.15

FIG. 11.16

FIG. 11.17

FIG. 11.18

INSTALLING THE TRUSS SUPPORT MAST

The great advantage of telescoping fiberglass poles are that they are both flexible and extremely strong. This is a significant advantage for such adverse weather situations as high winds, icing or snow accumulation. The only negative to this, is because of the flexibility, there is a slight natural "droop" at the element ends. This droop has no impact whatsoever on performance, but some people do not care for the look. On the DB36 Yagi, it is more pronounced because the Director element is a straight telescoping pole, which droops less than the 40/30 loop elements on either side of it. For aesthetics purposes only, we offer the optional 40/30 loop end truss kit, which allows for the leveling of the Reflector and Director 2 loop elements to the same latitude as the rest of the elements. This makes for a better overall profile for the Yagi. These trusses do not have any impact on load bearing.

The 40/30 loop truss is *REQUIRED* for the 49 ft Driven element. It is an option that can be purchased for the Reflector and Director 2 elements, but the mechanics of installing each are the same. The loop truss kit allows for the leveling of the elements to the same latitude. This makes for a better overall profile for the Yagi. These trusses do not have any impact on load bearing, they are used for aesthetic improvement only. With the 39 ft element truss, a 1-3/4" aluminum saddle (PN 10-1601-03) is used to secure the truss mast to the boom. With the 49 ft element truss, 2-1/4" aluminum saddles (10-1601-32) and 5/16" x 3-3/4" bolts (60-0114) are used. With this exception, all other steps are identical. The Director 2 element is shown below for instructional purposes but the methodology will be the same for each of the three loops.

The truss mast needs to be mounted so that it is centered on the halfway point between the EHU center-point and the return tube center-point. The overall length between the two center-points is 30 inches, so the halfway point is 15 inches. Make a mark on the boom 15 inches between the two center-points as shown in figure 12.01. Locate the truss support (PN 10-1054-01) and two 1-3/4" aluminum saddle halves (PN 10-1601-03). Place the saddles so that the edge of the saddle is on the edge of the mark as shown in figure 12.02. This will ensure that the support is indeed on the centerpoint. Insert two of the 5/16" x 3-1/2" hex head bolts (PN 60-0065) and secure with 5/16" Nylock nuts (PN 60-0046). Remember to use anti-seize on the stainless steel fasteners. Level the support before tightening as shown in figure 12.03.

Attach each of the 4 inch stainless steel turnbuckles (PN 60-0083) using the 1/4" x 1-1/4" hex head bolt (PN 60-0110), two of the 5/16" stainless steel flat washers (PN 60-0033) and 1/4" Nylock nuts (PN 60-0030) as shown in figure 12.04 and figure 12.05. The stainless steel washers are both positioned between the eye of the outside turnbuckle and the Nylock nut as shown in figure 12.06.

FIG. 12.01

FIG. 12.02

FIG. 12.03

FIG. 12.04

FIG. 12.05

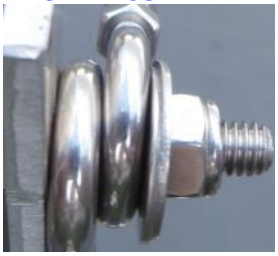

FIG. 12.06

ATTACH THE TRUSS COUPLERS

There are two pieces to the truss couplers (PN 10-1510-01) as shown in figure 12.10. The couplers are mounted on each side of the loop, located at the outer joint of the telescoping poles as shown in figure 12.11. The truss coupler butts up against the edge of the polyolefin heat shrink.

There are nut trays molded on one side of the truss coupler as shown in figure 12.12. These are handy for holding the #6 Nylock nut (PN 60-0014) when tightening, but you will need to position your finger over the nut to keep it from spinning when you thread on each of the #6 x 7/8" pan-head machine screw (PN 60-0014-01) as shown in figure 12.13. Only the outer four holes of the truss coupler are used for attaching it as shown in figure 12.14. Note that the top portion of the coupler (the portion facing skyward) has a hole, but this is also not used as shown in the second picture of figure 12.14. Align the truss coupler so that it is parallel to the telescoping pole and tighten each nut.

The Dacron truss cord is provided in a single piece and will need to be trimmed as you progress with the installation of the end trusses. Thread the Dacron cord through the truss coupler, leaving approximately ten inches of truss cord as shown in figure 12.15. Tie four half-hitches and leave approximately four inches of leader as shown in figure 12.16. Figure 12.17 shows the proper way to tie a half-hitch. When finished, apply electrical tape so that the leader of the Dacron rope is secured to the truss line as shown in figure 12.18.

FIG. 12.10

FIG. 12.11

FIG. 12.12

FIG. 12.13

FIG. 12.14

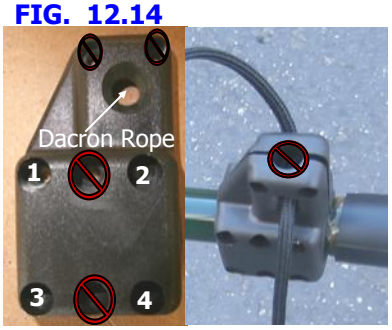

FIG. 12.15

FIG. 12.16

FIG. 12.17

FIG. 12.18

ROUTING THE DACRON TRUSS CORD

Before inserting the cord through the eyebolt of the 4" turnbuckle, unthread each eye so that there is approximately 3/8" thread remaining in the frame of the turnbuckle portion, as shown in figure 12.20. Locate the 1/8" thimble (PN 60-0158). Spread the thimble apart enough to slide on to the eye of the turnbuckle. When the thimble is through the eyebolt, bend the tips of the thimble back as close to each other as possible, as shown in figure 12.21.

Thread the Dacron truss cord through the eye of the turnbuckle and around the 1/8" thimble as shown in figure 12.22. Pull the truss cord back down to the truss coupler on the opposite side of the loop. Insert the Dacron cord through the truss coupler (refer to prior page for instructions), pulling the cord tight so that there is no slack on either side of the cord. The procedure for securing the Dacron truss cord on this end of the loop is exactly the same as the truss coupler you prepared initially.

At this point of the installation of the 40/30 loop element truss, it is important to assemble the truss couplers and Dacron truss cord on the other side of the EHU. Because of the significant torque generated by leveling of the elements, there needs to be equal force applied on each side as shown in figure 12.23.

When the 40/30 loops on each side of EHU have both been prepared, attach two 1/8" galvanized wire clips (PN 60-0157) on each side as shown in figure 12.24. Position the first wire clip as close as possible to the tip of the thimble. Position the second wire clip an inch behind the first. Be certain that the rope is "stacked" one on top of the other as shown in figure 12.25. Tighten the wire clips firmly.

FIG. 12.20

FIG. 12.21

FIG. 12.22

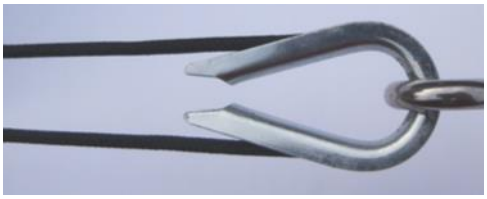

FIG. 12.23

FIG. 12.24

FIG. 12.25

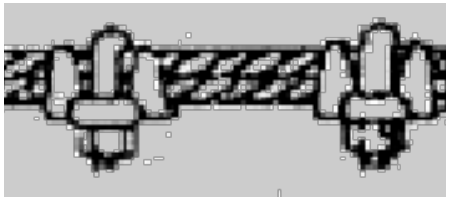

ROUTING THE DACRON TRUSS CORD (continued)

When leveling the elements, use two adjustable wrenches as shown in figure 12.26. The wrench that is placed on the thimble is held stationary, while the wrench that is on the frame of the turnbuckle is rotated. Adjust each turnbuckle a few turns at a time until the elements are level.

Be careful not to raise the elements so that the tips are above the EHU—this can cause water to drain into your EHU during rainfall. When the elements are at the desired position, tighten the nuts on each end of the turnbuckle frame as shown in figure 12.27. Be sure to do this with ALL turnbuckles, as this will prevent the turnbuckle from unwinding. As a secondary measure, we recommend looping rope or wire through the eye and frame of the turnbuckle as shown in figure 12.28.

In addition to the leveling of the elements, it is also important to ensure that the loops at the tip of the telescoping poles are parallel to the boom. The best method for this is to loosen the quick disconnect boots on the telescoping poles and twist the base of the pole until the loops are parallel to the boom. Figure 12.29 shows a loop that is not parallel. Figure 12.30 shows the loop being adjusted. Figure 12.31 shows the level and parallel half of the 40/30 element.

When the position of the loops are as desired, tighten the quick disconnect boots firmly. Wait 30 minutes and tighten again.

FIG. 12.26

FIG. 12.27

FIG. 12.28

FIG. 12.29

FIG. 12.30

FIG. 12.31

OPTIONAL 6M PASSIVE ELEMENT KIT

While the DB36 has a 4 element 6m Yagi that is standard, the spacing is a bit wide so gain is compromised and there is reduced front-to-rear. For the average 6m user, this configuration works just fine, with gain of 4.0 dBi and front-to-rear of 1.78 dB. Adding the optional 6m passive elements creates a high performing 6 element Yagi, with gain of 12.75dBi and front-to-rear of 27.4dB. As with any fixed length element, there is a limit to the effective frequency range— you can expect the optional 6m passive elements to function well in 50.00 MHz to 50.400 MHz frequency range, but there will be no 180 degree or bi-directional mode when operating on 6m. In addition, you will need to rotate it like a traditional Yagi for this band only.

Refer to the center-to-center measurements in figure 13.05 on the following page for placement of each 6m passive element, or in Chapter Two of this manual. For D1A the proper measurement is 27.25 inches center -to-center from the Driven element. For D2A the proper measurement is 59.75 inches center-to-center from Director 2.

The passive element consists of three sections of polished aluminum—a single 58" long x 1/2" OD center piece with plastic insulator, and two 36" long x 3/8 OD sections that telescope into each side of the 1/2" OD aluminum. The 1/2" aluminum has slotted ends, so that a stainless steel hose clamp can secure the two sections firmly together.

Using a measuring tape as shown in figure 13.02, measure the 3/8" aluminum pieces and mark with a permanent ink pen at the length required for the 6m passive element as shown in table 13.01. Telescope the 3/8" aluminum sections into each end of the 1/2" aluminum section. Place the stainless steel hose clamps (PN 60-6000-60) over the slotted portion of the joint as shown in figure 13.03. Tighten enough to hold the pieces in place but loose enough to adjust if needed. Measure the overall length of the 6m passive element (refer to table) as shown in figure 13.04. If the element is the required length, tighten the stainless steel hose clamp firmly on each side.

FIG. 13.01

6m Passive element	Total Element length	3/8" Aluminum length to reach total length (per side)
D1A	112 inches / 284.5 cm	27 inches / 68.58 cm
D2A	105 inches / 266.7 cm	23.5 inches / 59.70 cm

FIG. 13.02

FIG. 13.03

FIG. 13.04

OPTIONAL 6M PASSIVE ELEMENT KIT (continued)

Using kit 72-1002 and 2 sets of kit 70-1001-91, locate the 6m mounting plate (PN 10-1019-31). Using the 1 inch U-bolts (PN 60-0001) as shown in figure 13.06, place the 6m passive element on top of the 6m mounting plate with the slit in the plastic sleeve pointing downward. Position the plastic insulator so that it is centered between the two U-bolts. Tighten using the 1/4" Nylock nuts (PN 60-0030). Be careful not to over-tighten or you will crack the plastic insulator.

D1A (112" Overall Length)

Position two 2-1/2" aluminum saddle halves (PN 10-1601-41) on the boom and insert two 5/16" x 3-3/4" hex head bolts (PN 60-0114). Attach the 6m mounting plate with the bolt holes for the aluminum saddles facing towards the Reflector element as shown in figure 13.07. This mounting orientation is the same for D1A and D2A. Secure with 5/16" Nylock nuts (PN 60-0046) but leave loose enough for leveling and center-to-center spacing of the element as shown in figure 13.05 and Chapter Two.

D2A (105" Overall Length)

Position two 1-3/4" aluminum saddle halves (PN 10-1601-03) on the boom and insert two 5/16" x 3-1/2" hex head bolts (PN 60-0065). Attach the 6m mounting plate with the bolt holes for the aluminum saddles facing towards the Reflector element as shown in figure 13.07. Secure with 5/16" Nylock nuts (PN 60-0046) but leave loose enough for leveling and center-to-center spacing of the element as shown in figure 13.05 and Chapter Two.

Place a level on each 6m passive element as shown in figure 13.08. When the elements are level and the center-to-center measurements are correct, tighten the aluminum saddles. Be sure to use anti-seize on the stain-

FIG. 13.05

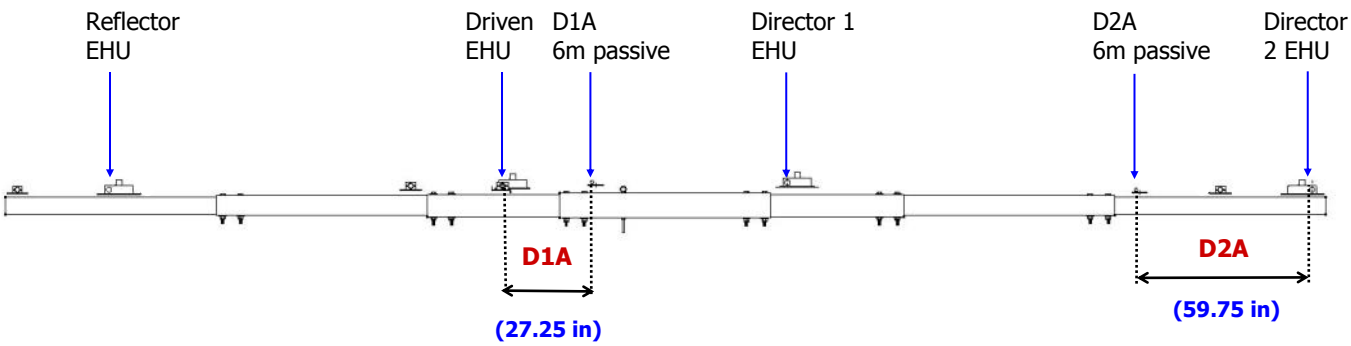

FIG. 13.06

FIG. 13.07

FIG. 13.08

SECURE THE CABLES ONTO THE BOOM

When the antenna assembly is completed, the last step before attaching the DB36 Yagi to the tower mast is the securing of cable and coax to the boom. Note that in many cases, the taping of the control cable may be the last step, done after the antenna is mounted on the tower. The most important aspect of the taping task is to be certain that **NO** control cable or coax is resting against a sharp edge. The most notable sharp edges occur when routing past an aluminum saddle, mast or mounting plates and even the threads on the stainless steel fasteners. AVOID these sharp edges! If you are routing the cable and find that you cannot avoid a sharp edge, take measures to put something between the cable and the sharp edge. In addition, be careful not to over-bend or kink any of the cables. Figure 14.01 shows an example of taping around a potential edge -hazard—in this case, the boom bolts.

There are several ways to secure the cables to the boom. The method used most of the time is to apply electrical tape. We have provided you with enough electrical tape to secure the cables to the boom. When using electrical tape, be sure to cut the tape with scissors. Do not pull the tape off until it severs, this can damage the tape. When done wrapping the electrical tape, leave a small flap on the edge of the cut end, for easier removal should the need occur at a later date. Approximately two wraps of electrical tape are sufficient for most control cable, three wraps for coax jumpers. As a general rule, applying tape approximately every two feet is adequate.

Other methods include the use of tie-wraps. Be careful when using tie-wraps! Be sure to purchase high quality, UV rated tie-wraps that are recommended for cable. Most of the standard off the shelf tie-wraps are not properly rated and will become brittle and may fail within a short period of time. Do not pull the tie wraps too tight, some brands have sharp edges and can actually damage the cable over time if pulled too tight.

When securing the cable to the boom, try to keep the cable at the bottom of the boom. The boom acts as a shield from the sun and can prolong the life of the cable. Our cable is outdoor UV rated, but it never hurts to err on the side of caution.

When taping cable that terminates at a terminal connection, such as the connector junction box or coax switch housing, be sure to leave some excess cable before taping, to avoid unnecessary stress being placed on the cable connection. Figure 14.02 shows good routing methods, with the control cable exiting out of one of the connector junction box conduit plugs and the three EHU cables exiting out the other conduit plug.

We recommend you label each of the control cable wires and the coax jumpers. The best place to label them is at the point nearest the connector junction box or the coax switch box. Labeling now will help out significantly should you need to disconnect your antenna at some point in the future. Figure 14.03 shows a connector junction box with labeled control cable. Note the tie wrap placed on the control cable as it exits the connector junction box—this is a great way to make your own strain relief, coupled with leaving slack in the cable itself when you tape it.

FIG. 14.01

FIG. 14.02

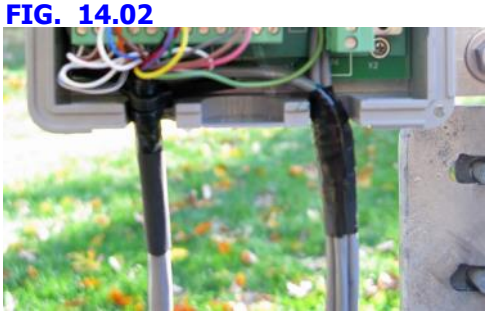

FIG. 14.03

MOUNT THE DB36 ONTO THE TOWER MAST

There are many different methods and mechanisms that are used in the course of attaching an antenna to its final resting spot. The most common method by far for a Yagi antenna is to mount it on a tower, with a mast fixed in place at the top of the tower. That is the assumption with these instructions. In a best case scenario in terms of ease of access, the antenna is being mounted on a tilt-over, crank-up tower or a crank-up tower that nests at the fairly traditional 21 ft. A Yagi often times is mounted at the top of a fixed-tower, high up in the air, where someone is strapped to the tower awaiting the antenna by means of gin-pole and transmission line or a crane/bucket lift. With this in mind, the mast plate is set up on the DB36 so that the mating process from mast plate to tower mast is made as easy as possible.

The tower mast connection uses four sets of aluminum saddles to attach the antenna to the tower mast as shown in figure 14.10. In most cases the tower mast is 2 inches in diameter, but occasionally the mast size may be different, depending on the customers situation. SteppIR offers saddle sizes in 1-3/4", 2", 2-1/4", 2-1/2" and 3". Since the vast majority of installations of the DB36 will be utilizing the standard 2 inch saddles, that is the verbiage used in the instructions that follow.

The 2 inch aluminum saddle halves (PN10-1601-22) are held in place using 5/16" x 3-3/4" hex head bolts

FIG. 14.10

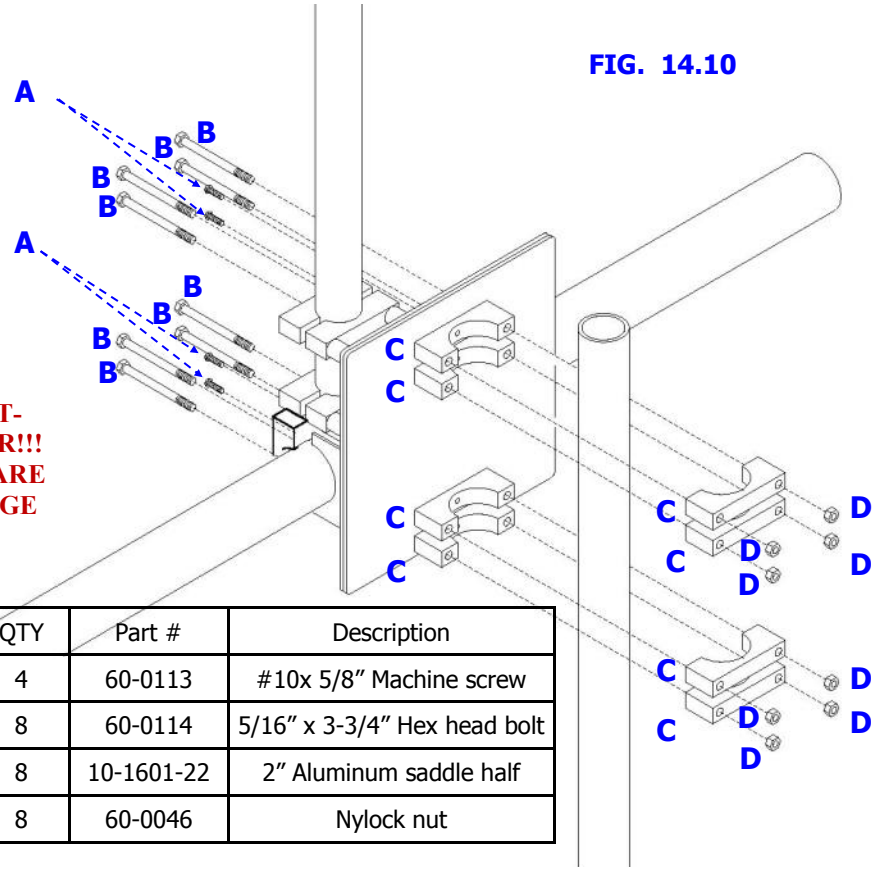

NOTE: BE SURE THE ANTENNA IS TESTED AND ALL ELEMENTS ARE WORKING CORRECTLY BEFORE ATTACHING THE DB36 TO THE TOWER!!! INSTRUCTIONS ON HOW TO TEST ARE LOCATED ON THE FOLLOWING PAGE

Key	QTY	Part #	Description
A	4	60-0113	#10x 5/8" Machine screw
B	8	60-0114	5/16" x 3-3/4" Hex head bolt
C	8	10-1601-22	2" Aluminum saddle half
D	8	60-0046	Nylock nut

MOUNT THE DB36 ONTO THE TOWER MAST (continued)

Figure 14.11 shows the four #10 x 5/8" machine screws inserted through the mast plate (each pair is circled in yellow). Figure 14.12 shows the a saddle halves mounted on the mast plate with the holes of the saddles aligning with the holes of the mast plate. This is critical, especially when the mating of the mast to the mast plate is being done while on top of a tower! Figure 14.13 shows the 5/16" hex head bolts inserted through the mast and the saddles. Figure 14.14 shows the antenna mast connected to the completed antenna mast. Remember to insert and tighten the set screws for the saddles.

FIG. 14.11

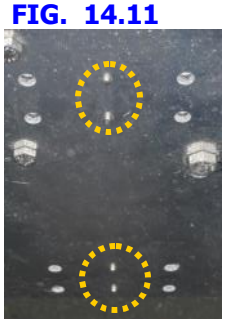

FIG. 14.12

FIG. 14.13

FIG. 14.14

LAST STEPS:

IT IS VERY IMPORTANT THAT YOU PERFORM EACH OF THESE STEPS BEFORE ATTACHING THE ANTENNA TO THE TOWER MAST

1. Connect the controller to the control cable and extend the elements simultaneously all the way out to the 40m band. Have someone listen as the copper strip extends outward into the support tubes. Ideally, having one person per element works best.
2. As the motors extend the copper strip, they start out moving very slowly, and then ramp up to full speed. There should be an accompanying hum for this that should never sound harsh, or choppy.
3. If there are any obstructions stopping the copper strip from making it's way out, you should notice a significant sound that will not be confused with the smooth motor sound. Listen for any significantly loud "clicks", scraping sounds or anything that sounds out of the ordinary.
4. If there is something that outright stops the copper strip from extending or retracting, you will get a harsh sound as the motors try to keep going but the tape is stuck.
5. If any of these "bad" sounds occur, try to locate the area where the problem is happening and investigate. Repeat these steps again. If all is OK, proceed to step 6.
6. Check all fasteners on the antenna to be certain that they are tight. This may seem redundant, but the time to discover a loose fastener is NOW, not when that part it was supposed to hold falls out of the sky.
7. Be sure that you have set-screws in all the saddles, where applicable. Be sure they are tightened.
8. Check all the quick disconnect boots to be sure they are as tight as possible and are in the correct position relative to the EHU and the telescoping poles.
9. Check all wiring and coax jumpers to ensure that they are secured to the boom and that they are not resting against any sharp objects.
10. If you have any of the optional trusses, be sure your turnbuckles are locked in place and that the loop element or boom is level.
11. Check to be sure that the elements are level with the boom— a level antenna looks much better when suspended in the air than one that is not!
12. Get the DB36 Yagi on that tower so you can work some good DX!

TROUBLESHOOTING TIPS

SteppIR antennas are all powered by stepper motors, hence the name. Stepper motors function by rotating the shaft a specific number of "steps" per revolution. The SDA 100 is simply counting the steps, of which for each step sequence there is a known length that the antenna is adjusting. If for some reason the antenna gets out of calibration, the method for recalibrating is pretty simple. When you press the calibrate button, the controller retracts each element until it assumes it is "home", and then keeps retracting the stepper motors for a period of time to ensure that there is no question that the elements have indeed been homed. At that point, the controller sends the elements back out to the exact frequency they were at when the calibration function started. That is why in calibration mode you will hear the antennas make a loud growling sound towards the end of the retracting—the elements are homed but the stepper motors keep right on going for a while longer before sending the elements back out.

It is important to note that if a problem arises with the elements, such as an obstruction that is impeding the path of the copper strip, the SDA 100 controller will not recognize this, so just because the controller is showing the proper length for any given band, there may still be an issue. Even though the controller may indicate that the copper strip is moving, in a troubleshooting situation it very well may not be. The controller does not have much say in the indicating of a problem—it's job is to simply get the elements to the right length. This is why we have come up with the following information for you to review when having issues:

The antenna is out of calibration—this is something that happens from time to time and is not a problem at all. Whenever you suspect a problem the very first thing that should be done is a calibrate. It is always a good idea to calibrate the antenna if you are having trouble. It is best to set the DB36 to 20M before doing the calibrate function. You only need to calibrate once. To be certain that the antenna was indeed out of calibration, check the SWR before you calibrate and check it again after you calibrate to see if there are any improvements. If the SWR is unchanged, the antenna was in calibration and is not the issue.

The lengths of the antenna are incorrect— Using the "Cause/Effect" theory, generally the first place to look for trouble is the last place you have been. Using this line of thinking, if there is a problem with your antenna, we need to be sure you are using the factory default lengths for your controller. Regardless of whether you think you have done anything that could change the lengths, as a second step in troubleshooting (the first being the simple calibration of the antenna), be sure to reset the factory default lengths.

The SDA 100 electronic controller has a defective or intermittent driver chip—It only takes a momentary short to damage a driver chip. The problem with driver chips, is that a blown driver chip or a damaged driver chip that has not failed outright can act a lot like a damaged EHU. What we don't want you to do, is jump to conclusion on an EHU issue, only to spend time and money taking your antenna down and find out that it was a driver chip problem, or some other issue with the controller in the first place. Taking the time to troubleshoot and repair a controller is **MUCH** easier than taking down an antenna to repair an EHU.

With that in mind, the following are steps for checking the voltage between the pin pairs that feed the motor windings. This information is critical to our technical support staff and you can save a lot of time by having this data available before contacting us. Instructions as follows:

With the DB-25 connector removed from the back of the controller, measure the voltage between the pin pairs that feed the motor windings. For example, pins 1 & 2 and 3 & 4 when referring to the driven element. The other elements pin pairs are listed in the troubleshooting guide These are the same pairs you use to

TROUBLESHOOTING TIPS (continued)

check the resistance of the motor windings**. Be very careful not to short the pairs together or touch any other pins in the process, or you can potentially damage the controller driver chips.**

With the controller power plugged in, you should read approximately 3.5 VDC across each pin pair. At this point, change bands using the controllers band change button. As an example, switching from 20m to 10m generally gives a long enough run to get a good reading. You should be reading on your volt-ohm meter approximately 20 to 25 VAC using a 24 volt power supply. To check the next pin pair, you can then change bands back to 20m and so on through the wire pairs. If you have significantly different values at any point in the test process, you can be reasonably certain that you have a damaged driver chip for that element. Please be aware that in some cases, we have seen driver chips partially damaged, causing them to work part of the time. This can be confusing in the test process.

If you do not have the optional 25 pin dSub splice assembly (see Chapter Five, Section 5.2) when measuring the voltages, a suggestion would be to use a bare 25pin dsub to plug into the SteppIR controller and then insert a paper clip to penetrate the pin hole. Usually about .75" long will do the trick. One paper clip being longer than the other also helps. Again, be careful NOT to short the pins. Even if the controller is turned off, there is always voltage going to the pins with a SteppIR controller. We do this to "lock" the stepper motors, and minimize the need to calibrate the antenna on a regular basis.

The Director or Reflector element is not tuning, or tuning intermittently—This could be a defective control cable, controller driver chip or a defective EHU. If you have already tested for these potential issues and to verify if the EHU is actually tuning, follow these steps:

1. Go to "Create/Modify" in setup mode and apply enough power to get a good SWR reading.
2. Select the Reflector element and change its length about 15-inches and see if you see a difference in SWR. It doesn't matter if the SWR improves or gets worse as long as it changes. This indicates the element is tuning.
3. Select the Director element and repeat the above steps. If the SWR changes the element is moving.

If the EHU looks like it is not moving and you have already done all of the wiring checks in this section, contact our technical support department for further instructions.

STEPPIR ANTENNAS LIMITED PRODUCT WARRANTY

Our products have a limited warranty against manufacturers defects in materials or construction for two (2) years from date of shipment. Do not modify this product or change physical construction without the written consent of Fluidmotion Inc, dba SteppIR Antennas.

This limited warranty is automatically void if the following occurs: improper installation, unauthorized modification and physical abuse, or damage from severe weather that is beyond the product design specifications.

SteppIR Antenna's responsibility is strictly limited to repair or replacement of defective components, at SteppIR Antennas discretion. SteppIR Antennas will not be held responsible for any installation or removal costs, costs of any ancillary equipment damage or any other costs incurred as a result of the failure of our products.

In the event of a product failure, a return authorization is required for warranty repairs. This can be obtained at www.steppir.com. Shipping instructions will be issued to the buyer for defective components, and shipping charges to the factory will be paid for by the buyer. SteppIR will pay for standard shipping back to the buyer. The manufacturer assumes no further liability beyond repair or replacement of the product.

SteppIR Contact Information

Email :

New orders or questions about your current order: sales@steppir.com

Existing customers requiring technical or product support services: support@steppir.com

Information and questions about our products: sales@steppir.com

Phone / Fax:

Phone: 425-453-1910—9:30am to 4:30pm Pacific Standard Time
Fax : 425-462-4415
Tech Support: 425-891-6134—10:00am to 5:00pm Eastern Standard Time

Address:

Fluidmotion Inc.
SteppIR Antennas
2112 116th Ave NE
Suite 1-5
Bellevue, WA 98004

Manual written by John Mertel WA7IR with key contributions
from Adam Blackmer K7EDX and Jim Strieble K4DLI

2112 116th Ave NE #1-5, Bellevue, WA 98004 ● Tel: 425.453.1910 ● email: sales@steppir.com

COHEN, DIPPELL AND EVERIST, P.C.

EXHIBIT E-9

INFORMATION

ANTENNA ASSEMBLY ON

PROPOSED TOWER

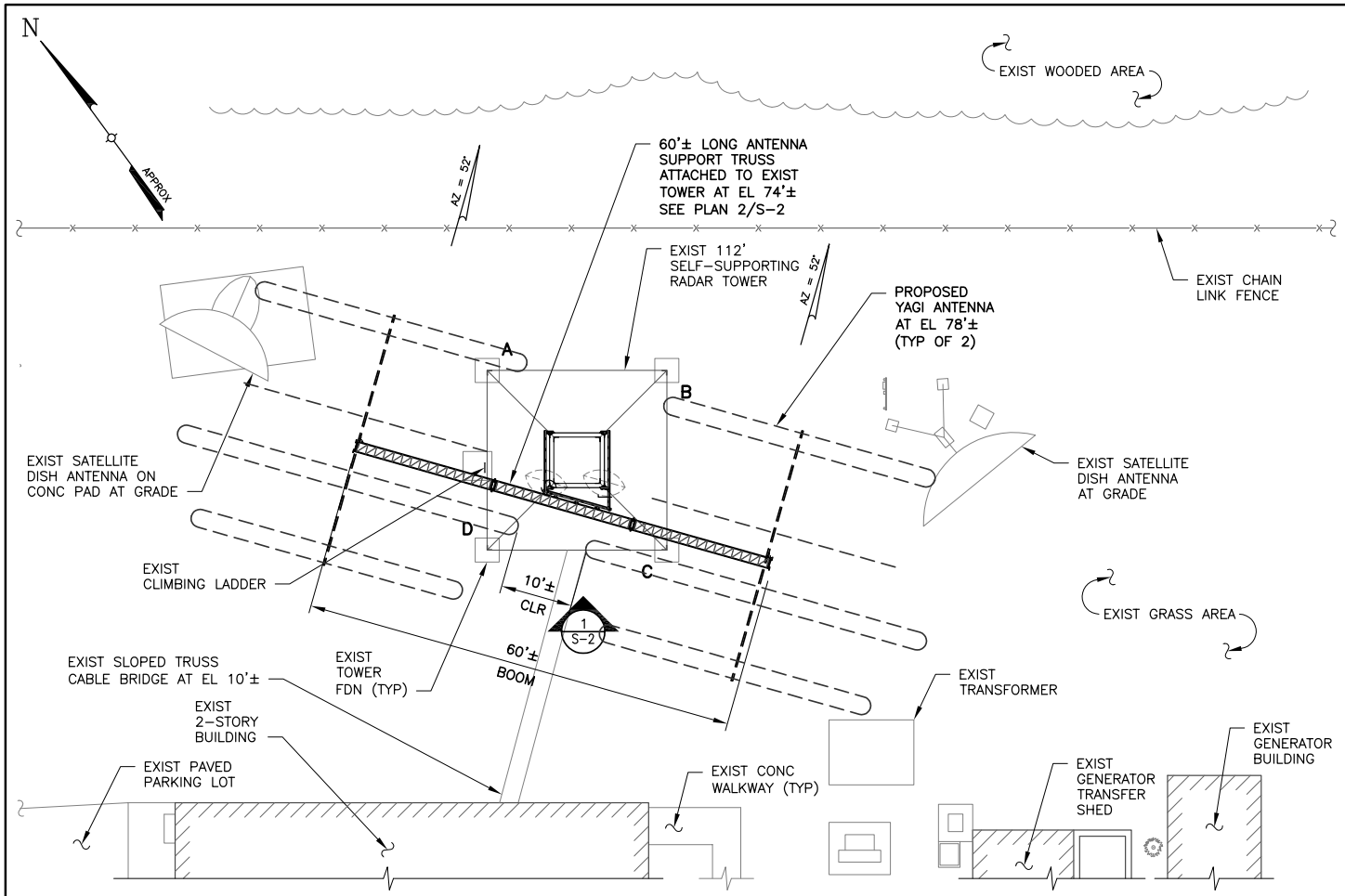

DESIGN CRITERIA

PER IBC 2015

RISK CATEGORY:	II
ULTIMATE DESIGN WIND SPEED, V_{ULT}:	115 MPH (3-SECOND GUST)
NOMINAL DESIGN WIND SPEED, V_{ASD}:	89 MPH (3-SECOND GUST)

ANSI/TIA-222-G

BASIC WIND SPEED, V:	89 MPH (3-SECOND GUST)
BASIC WIND SPEED WITH ICE, V_i:	50 MPH
DESIGN ICE THICKNESS:	0.75"
EXPOSURE CATEGORY:	C
STRUCTURE CATEGORY:	II
TOPOGRAPHIC CATEGORY:	5 (CREST HEIGHT: 522 FT)

EQUIPMENT: (2) PROPOSED STEPPIR DB36 YAGI ANTENNAS

1 / S-1 PARTIAL SITE PLAN

SCALE: 1/16" = 1'-0"

PRELIMINARY
NOT FOR CONSTRUCTION OR ORDERING OF ANY MATERIALS

PLANS ARE NOT TO BE SCALED.

0 1 2 3

ORIGINAL SIZE IN INCHES

COPIES OF THIS DOCUMENT WITHOUT A FACSIMILE OF THE SIGNATURE AND AN ORIGINAL EMBOSSED SEAL OR ORIGINAL STAMP OF THE PROFESSIONAL ENGINEER OR LAND SURVEYOR SHALL NOT BE CONSIDERED VALID COPIES.

THIS DOCUMENT IS PREPARED SPECIFICALLY FOR THE CLIENT AND PROJECT DESIGNATED HEREON. MODIFICATION, ALTERATION, REVISION, DUPLICATION, OR USE WITHOUT THE CONSENT OF *TECTONIC* IS STRICTLY PROHIBITED. COPYRIGHT 2016 *TECTONIC*. ALL RIGHTS RESERVED.

Rev Date	DRAWING CONTROL		
07/22/16	Designed by: IM	Drawn by: NM	Checked by: KZ
	Purpose	Released by	Date
	● For Comment	KZ	6/3/16
	○ For Approval		
	○ For Bid		
	○ For Construction		

ANTONIO A. GUALTIERI, P.E.
N.J. PROFESSIONAL ENGINEER
LICENSE NO. 24GE04543600

TECTONIC
Practical Solutions, Exceptional Service
TECTONIC Engineering & Surveying Consultants P.C.
1279 Route 300
Newburgh, NY 12550
Phone: (845) 567-6656
(800) 829-6531
www.tectonicengineering.com

PARTIAL SITE PLAN & DESIGN CRITERIA

C.S.C. MANAGEMENT, L.L.C./ALPINE TOWER CO.
LONG BEAM YAGI ANTENNA INSTALLATION
EXISTING 112' SELF-SUPPORTING RADAR TOWER
ROUTE 9W
ALPINE, NEW JERSEY

Date	Work Order	Drawing No.	Rev
6/3/16	8300.LONGBEAM	S-1	1
Scale: AS NOTED			

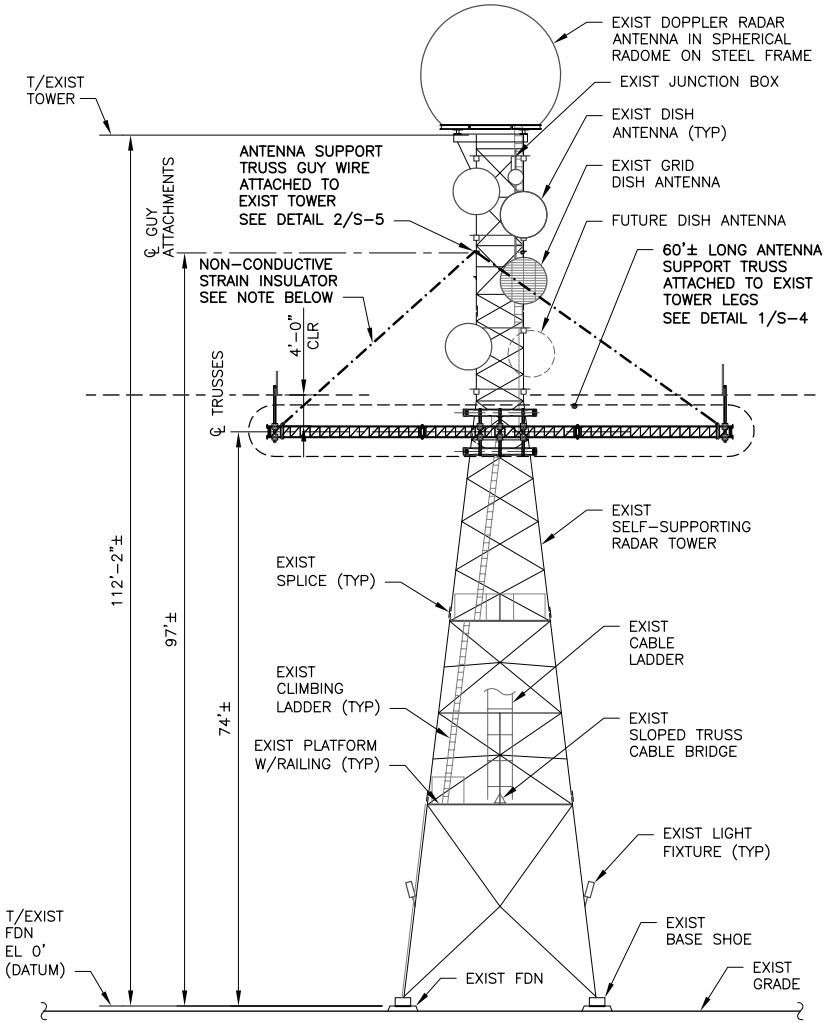

1 S-2

SOUTHWEST TOWER ELEVATION

SCALE: 1/16" = 1'-0"

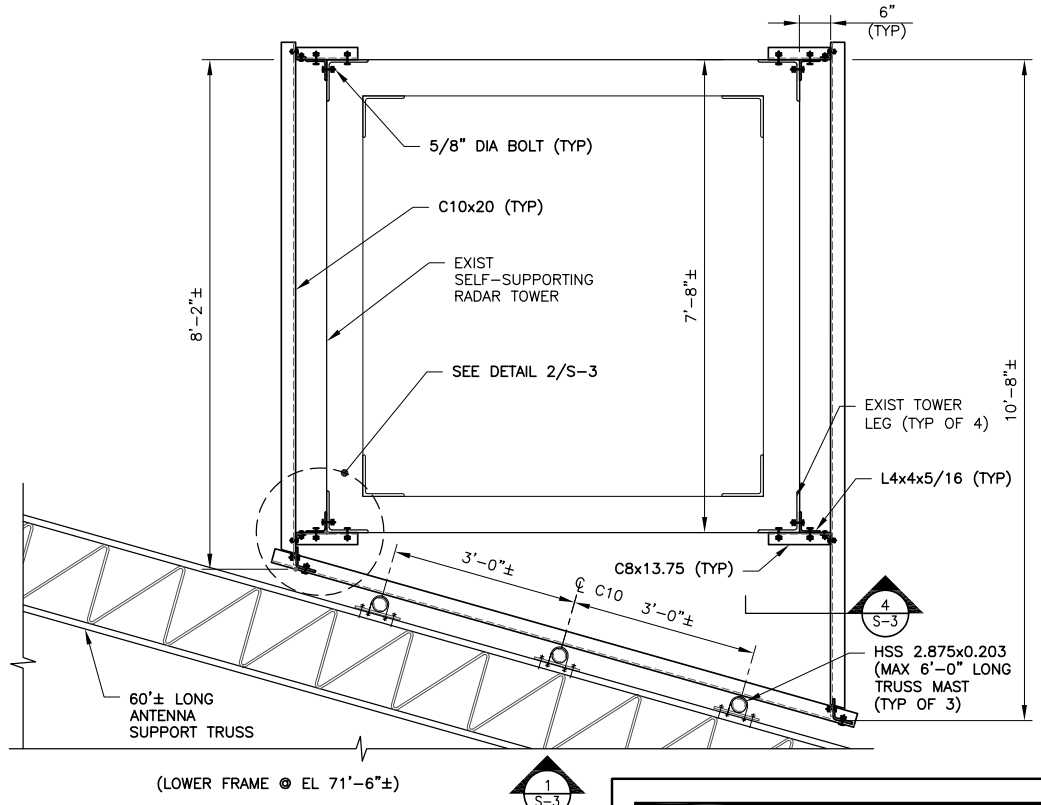

2 S-2

TRUSS SUPPORT FRAME

SCALE: 1/2" = 1'-0"

NOTE:
PROVIDE NON-CONDUCTIVE STRAIN INSULATORS AT ANY GUYS LOCATED IN FRONT OF EXISTING ANTENNAS AS APPROVED BY THE CSC REPRESENTATIVE. SEE NOTES ON DRAWING S-6.

PLANS ARE NOT TO BE SCALED.

0 1 2 3

ORIGINAL SIZE IN INCHES

COPIES OF THIS DOCUMENT WITHOUT A FACSIMILE OF THE SIGNATURE AND AN ORIGINAL EMBOSSED SEAL OR ORIGINAL STAMP OF THE PROFESSIONAL ENGINEER OR LAND SURVEYOR SHALL NOT BE CONSIDERED VALID COPIES.

THIS DOCUMENT IS PREPARED SPECIFICALLY FOR THE CLIENT AND PROJECT DESIGNATED HEREON. MODIFICATION, ALTERATION, REVISION, DUPLICATION, OR USE WITHOUT THE CONSENT OF *TECTONIC* IS STRICTLY PROHIBITED. COPYRIGHT 2016 *TECTONIC*. ALL RIGHTS RESERVED.

Rev Date	DRAWING CONTROL		
07/22/16	Designed by: IM	Drawn by: NM	Checked by: KZ
	Purpose	Released by	Date
	● For Comment	KZ	6/3/16
	○ For Approval		
	○ For Bid		
	○ For Construction		

ANTONIO A. GUALTIERI, P.E.
N.J. PROFESSIONAL ENGINEER
LICENSE NO. 24GE04543600

TECTONIC
Practical Solutions, Exceptional Service
TECTONIC Engineering & Surveying Consultants P.C.
1279 Route 300
Newburgh, NY 12550
Phone: (845) 567-6656
(800) 829-6531
www.tectonicengineering.com

TOWER ELEVATION & TRUSS SUPPORT FRAME

**C.S.C. MANAGEMENT, L.L.C./ALPINE TOWER CO.
LONG BEAM YAGI ANTENNA INSTALLATION
EXISTING 112' SELF-SUPPORTING RADAR TOWER
ROUTE 9W
ALPINE, NEW JERSEY**

Date	Work Order	Drawing No.	Rev
6/3/16	8300.LONGBEAM	S-2	1
Scale: AS NOTED			

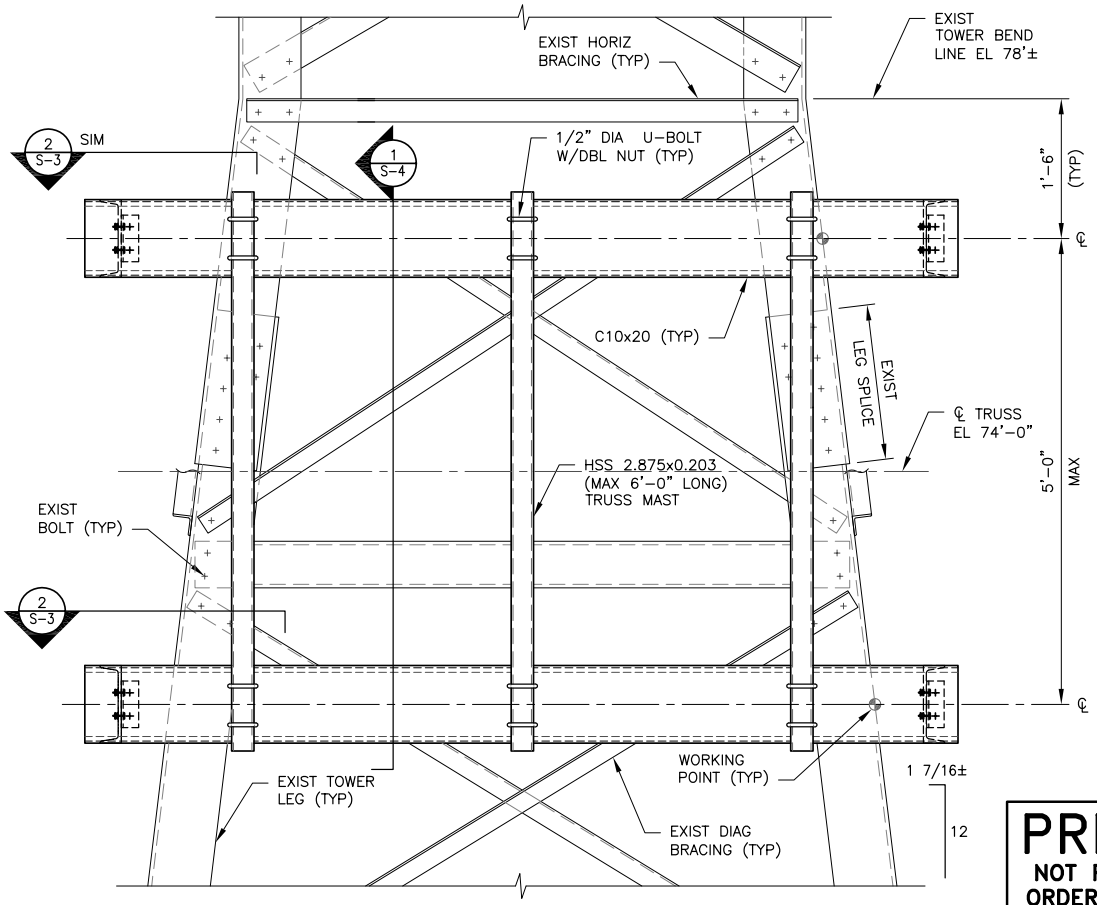

NOTE:
EXISTING CABLES AND CABLE ATTACHMENTS NOT SHOWN FOR CLARITY.

1 S-3 SECTION
SCALE: 3/4" = 1'-0"

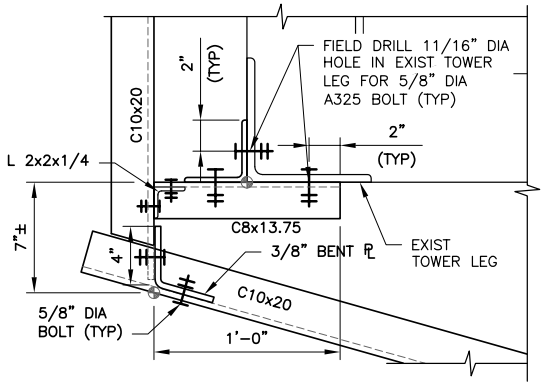

2 S-3 DETAIL
SCALE: 1 1/2" = 1'-0"

PRELIMINARY
NOT FOR CONSTRUCTION OR ORDERING OF ANY MATERIALS

NOTE:
THE PROPOSED TOWER CONNECTION DETAILS ARE BASED ON A LIMITED VISUAL INSPECTION FROM GROUND LEVEL. ADJUSTMENTS TO THE CONNECTION LOCATIONS AND DETAILS MAY BE REQUIRED UPON COMPLETION OF A DETAILED TOWER MAPPING BY THE CONTRACTOR. FINAL CONNECTION LOCATIONS AND DETAILS SHALL BE BASED ON THE ACTUAL EXISTING FIELD CONDITIONS AND SHALL BE APPROVED BY TECTONIC.

PLANS ARE NOT TO BE SCALED.

0 1 2 3
ORIGINAL SIZE IN INCHES

COPIES OF THIS DOCUMENT WITHOUT A FACSIMILE OF THE SIGNATURE AND AN ORIGINAL EMBOSSED SEAL OR ORIGINAL STAMP OF THE PROFESSIONAL ENGINEER OR LAND SURVEYOR SHALL NOT BE CONSIDERED VALID COPIES.

THIS DOCUMENT IS PREPARED SPECIFICALLY FOR THE CLIENT AND PROJECT DESIGNATED HEREON. MODIFICATION, ALTERATION, REVISION, DUPLICATION, OR USE WITHOUT THE CONSENT OF *TECTONIC* IS STRICTLY PROHIBITED. COPYRIGHT 2016 *TECTONIC*. ALL RIGHTS RESERVED.

Rev	Date
	07/22/16

DRAWING CONTROL

Designed by: IM	Drawn by: NM	Checked by: KZ
Purpose	Released by	Date
● For Comment	KZ	6/3/16
○ For Approval		
○ For Bid		
○ For Construction		

ANTONIO A. GUALTIERI, P.E.
N.J. PROFESSIONAL ENGINEER
LICENSE NO. 24GE04543600

TECTONIC
Practical Solutions, Exceptional Service
TECTONIC Engineering & Surveying Consultants P.C.
1279 Route 300
Newburgh, NY 12550
Phone: (845) 567-6656
(800) 829-6531
www.tectonicengineering.com

TRUSS CONNECTION DETAIL & SECTION

C.S.C. MANAGEMENT, L.L.C./ALPINE TOWER CO.
LONG BEAM YAGI ANTENNA INSTALLATION
EXISTING 112' SELF-SUPPORTING RADAR TOWER
ROUTE 9W
ALPINE, NEW JERSEY

Date	Work Order	Drawing No.	Rev
6/3/16	8300.LONGBEAM	S-3	1
Scale: AS NOTED			

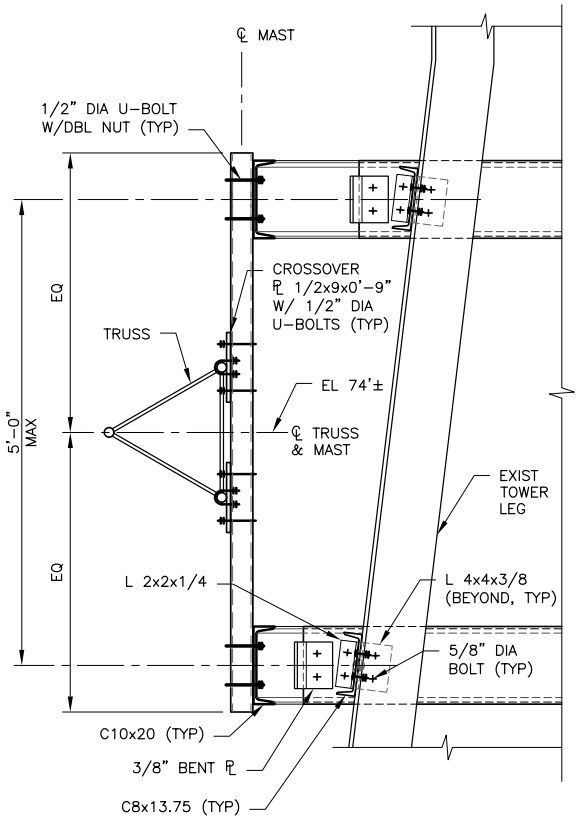

1 / S-4 SECTION

SCALE: 3/4" = 1'-0"

NOTE:
THE PROPOSED TOWER CONNECTION DETAILS ARE BASED ON A LIMITED VISUAL INSPECTION FROM GROUND LEVEL. ADJUSTMENTS TO THE CONNECTION LOCATIONS AND DETAILS MAY BE REQUIRED UPON COMPLETION OF A DETAILED TOWER MAPPING BY THE CONTRACTOR. FINAL CONNECTION LOCATIONS AND DETAILS SHALL BE BASED ON THE EXISTING FIELD CONDITIONS AND SHALL BE APPROVED BY TECTONIC.

PLANS ARE NOT TO BE SCALED.

0 1 2 3

ORIGINAL SIZE IN INCHES

COPIES OF THIS DOCUMENT WITHOUT A FACSIMILE OF THE SIGNATURE AND AN ORIGINAL EMBOSSED SEAL OR ORIGINAL STAMP OF THE PROFESSIONAL ENGINEER OR LAND SURVEYOR SHALL NOT BE CONSIDERED VALID COPIES.

THIS DOCUMENT IS PREPARED SPECIFICALLY FOR THE CLIENT AND PROJECT DESIGNATED HEREON. MODIFICATION, ALTERATION, REVISION, DUPLICATION, OR USE WITHOUT THE CONSENT OF *TECTONIC* IS STRICTLY PROHIBITED. COPYRIGHT 2016 *TECTONIC*. ALL RIGHTS RESERVED.

PRELIMINARY

NOT FOR CONSTRUCTION OR ORDERING OF ANY MATERIALS

Rev Date	DRAWING CONTROL			
07/22/16	Designed by: IM	Drawn by: NM	Checked by: KZ	
	Purpose	Released by		Date
	● For Comment	KZ		6/3/16
	○ For Approval			
	○ For Bid			
	○ For Construction			

ANTONIO A. GUALTIERI, P.E.
N.J. PROFESSIONAL ENGINEER
LICENSE NO. 24GE04543600

TECTONIC
Practical Solutions, Exceptional Service
TECTONIC Engineering & Surveying Consultants P.C.
1279 Route 300
Newburgh, NY 12550
Phone: (845) 567-6656
(800) 829-6531
www.tectonicengineering.com

TRUSS CONNECTION DETAIL & SECTION

C.S.C. MANAGEMENT, L.L.C./ALPINE TOWER CO.
LONG BEAM YAGI ANTENNA INSTALLATION
EXISTING 112' SELF-SUPPORTING RADAR TOWER
ROUTE 9W
ALPINE, NEW JERSEY

Date	Work Order	Drawing No.	Rev
6/3/16	8300.LONGBEAM	S-4	1
Scale: AS NOTED			

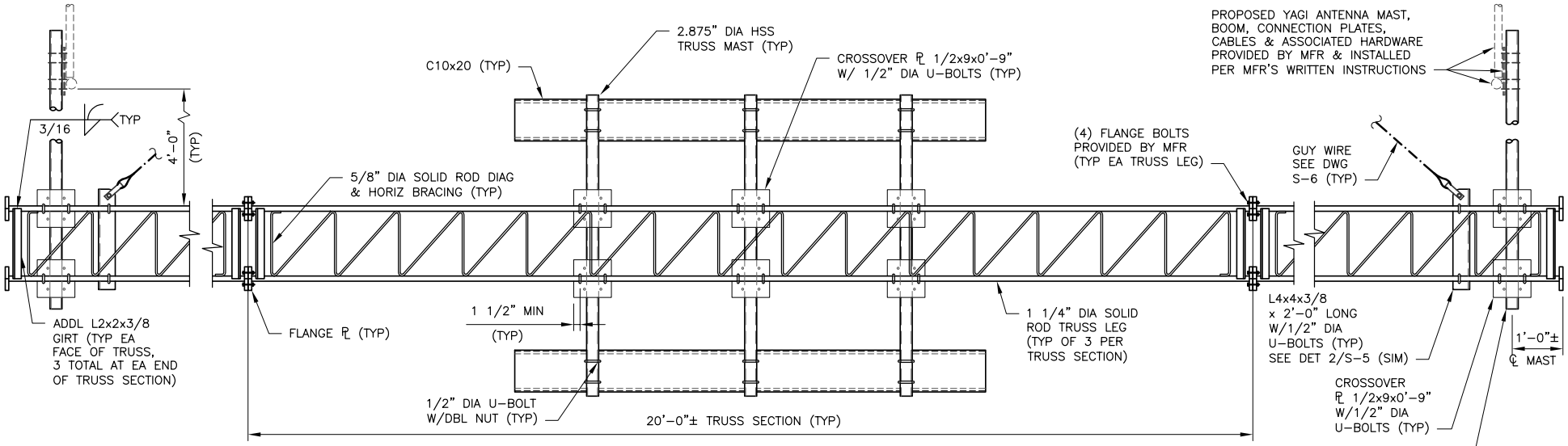

1 / S-5 TRUSS SECTION

SCALE: 1/2" = 1'-0"

CUSTOM ROHN METEOROLOGICAL TOWER SECTION
PART NO. 45GSR20 W/ 5/8" DIA SOLID ROD BRACING

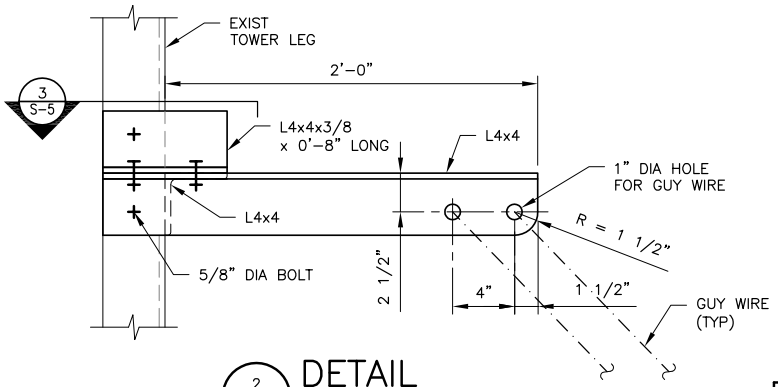

2 / S-5 DETAIL

SCALE: 1 1/2" = 1'-0"

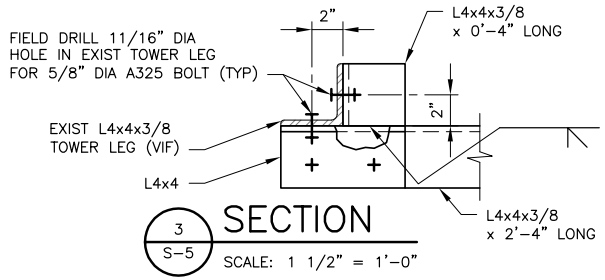

3 / S-5 SECTION

SCALE: 1 1/2" = 1'-0"

PRELIMINARY
NOT FOR CONSTRUCTION OR ORDERING OF ANY MATERIALS

TECTONIC
Practical Solutions, Exceptional Service
TECTONIC Engineering & Surveying Consultants P.C.
1279 Route 300
Newburgh, NY 12550
Phone: (845) 567-6656
(800) 829-6531
www.tectonicengineering.com

TRUSS & GUY CONNECTION SECTIONS & DETAIL

C.S.C. MANAGEMENT, L.L.C./ALPINE TOWER CO.
LONG BEAM YAGI ANTENNA INSTALLATION
EXISTING 112' SELF-SUPPORTING RADAR TOWER
ROUTE 9W
ALPINE, NEW JERSEY

Date	Work Order	Drawing No.	Rev
6/3/16	8300.LONGBEAM	S-5	1
Scale: AS NOTED			

Rev	Date	DRAWING CONTROL			
	07/22/16	Designed by: IM	Drawn by: NM	Checked by: KZ	
		Purpose	Released by		Date
		● For Comment	KZ		6/3/16
		○ For Approval			
		○ For Bid			
		○ For Construction			

ANTONIO A. GUALTIERI, P.E.
N.J. PROFESSIONAL ENGINEER
LICENSE NO. 24GE04543600

PLANS ARE NOT TO BE SCALED.

0 1 2 3
ORIGINAL SIZE IN INCHES

COPIES OF THIS DOCUMENT WITHOUT A FACSIMILE OF THE SIGNATURE AND AN ORIGINAL EMBOSSED SEAL OR ORIGINAL STAMP OF THE PROFESSIONAL ENGINEER OR LAND SURVEYOR SHALL NOT BE CONSIDERED VALID COPIES.

THIS DOCUMENT IS PREPARED SPECIFICALLY FOR THE CLIENT AND PROJECT DESIGNATED HEREON. MODIFICATION, ALTERATION, REVISION, DUPLICATION, OR USE WITHOUT THE CONSENT OF *TECTONIC* IS STRICTLY PROHIBITED. COPYRIGHT 2016 *TECTONIC*. ALL RIGHTS RESERVED.

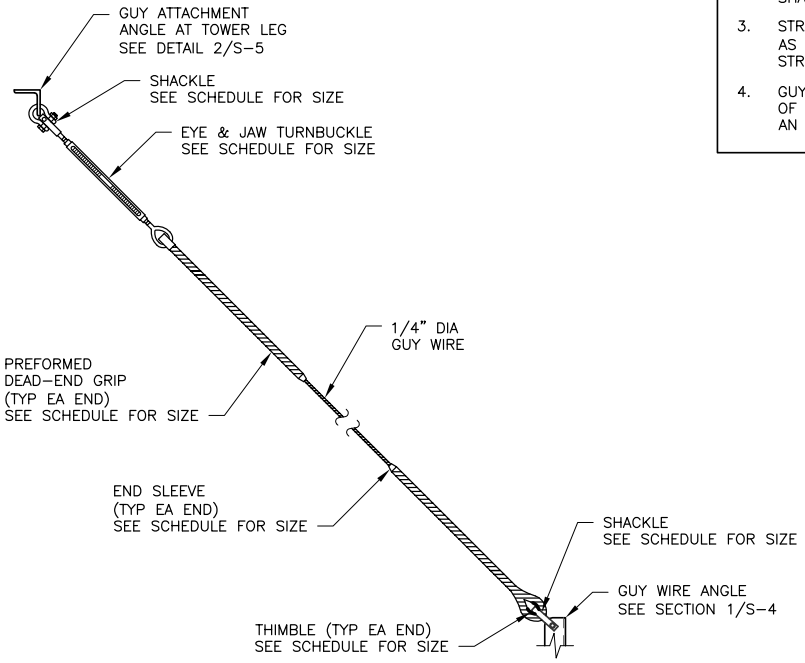

1 / S-6 TYPICAL GUY WIRE DETAIL

SCALE: NONE

GUY WIRE NOTES

1. GUY WIRE SHALL BE EXTRA HIGH-STRENGTH GRADE (TYPE EHS), SEVEN WIRE STRANDED STEEL CABLE CONFORMING TO ASTM A475 "ZINC-COATED STEEL WIRE STRAND", LATEST EDITION. MINIMUM BREAKING STRENGTH SHALL BE 6,650 LBS. ZINC-COATING SHALL BE CLASS A. GUY LENGTH SHALL BE DETERMINED IN FIELD BY THE CONTRACTOR.
2. GUY COMPONENTS AND HARDWARE SHALL BE AS MANUFACTURED BY ROHN, UNLESS OTHERWISE INDICATED. ALL MATERIALS SHALL BE HOT-DIP GALVANIZED AFTER FABRICATION.
3. STRAIN INSULATORS SHALL BE ARAMID FIBER TYPE HPTG-I, PART NO. HPTG 6700I, WITH CORONA SOCKETS, PART NO. CS6700, AS MANUFACTURED BY PHILLYSTRAN, INC., MONTGOMERYVILLE, PA, (215) 368-6611. ALL COMPONENTS SHALL HAVE A BREAKING STRENGTH OF AT LEAST 6,650 LBS.
4. GUYS SHALL BE INSTALLED AT A TEMPERATURE OF 60° F, UNLESS OTHERWISE APPROVED BY CSC REPRESENTATIVE. TENSIONS OF ALL GUYS SHALL BE ADJUSTED TO COMPENSATE FOR AMBIENT TEMPERATURE CONDITIONS. GUYS SHALL BE TENSIONED TO AN INITIAL TENSION OF 670 ± 70 LBS.

GUY HARDWARE SCHEDULE

ITEM	SIZE	ROHN PART NUMBER	QUANTITY
1/4" GUY WIRES			
EYE & JAW TURNBUCKLE	3/8" x 6"	3/8TBE&J	2
SHACKLE	3/8"	3/8S	4
THIMBLE	3/8"	3/8THH	4
PREFORMED DEAD-END GRIP (BIG-GRIP)	1/4"	BG2144	4
(BIG GRIP) END SLEEVE	1/4"	GC65136	4

THIS IS A PARTIAL LIST OF HARDWARE REQUIRED TO PERFORM THE WORK INDICATED. CONTRACTOR SHALL PROVIDE ALL TEMPORARY AND MISCELLANEOUS HARDWARE AND ADDITIONAL ITEMS NECESSARY FOR A COMPLETE JOB. ALL HARDWARE USED SHALL HAVE A BREAKING STRENGTH OF AT LEAST 6,650 LBS.

PRELIMINARY
NOT FOR CONSTRUCTION OR ORDERING OF ANY MATERIALS

PLANS ARE NOT TO BE SCALED.

0 1 2 3

ORIGINAL SIZE IN INCHES

COPIES OF THIS DOCUMENT WITHOUT A FACSIMILE OF THE SIGNATURE AND AN ORIGINAL EMBOSSED SEAL OR ORIGINAL STAMP OF THE PROFESSIONAL ENGINEER OR LAND SURVEYOR SHALL NOT BE CONSIDERED VALID COPIES.

THIS DOCUMENT IS PREPARED SPECIFICALLY FOR THE CLIENT AND PROJECT DESIGNATED HEREON. MODIFICATION, ALTERATION, REVISION, DUPLICATION, OR USE WITHOUT THE CONSENT OF *TECTONIC* IS STRICTLY PROHIBITED. COPYRIGHT 2016 *TECTONIC*. ALL RIGHTS RESERVED.

Rev Date	DRAWING CONTROL		
07/22/16	Designed by: IM	Drawn by: NM	Checked by: KZ
	Purpose	Released by	Date
	● For Comment	KZ	6/3/16
	○ For Approval		
	○ For Bid		
	○ For Construction		

ANTONIO A. GUALTIERI, P.E.
N.J. PROFESSIONAL ENGINEER
LICENSE NO. 24GE04543600

TECTONIC
Practical Solutions, Exceptional Service
TECTONIC Engineering & Surveying Consultants P.C.
1279 Route 300
Newburgh, NY 12550
Phone: (845) 567-6656
(800) 829-6531
www.tectonicengineering.com

TYPICAL GUY WIRE DETAIL & NOTES

C.S.C. MANAGEMENT, L.L.C./ALPINE TOWER CO.
LONG BEAM YAGI ANTENNA INSTALLATION
EXISTING 112' SELF-SUPPORTING RADAR TOWER
ROUTE 9W
ALPINE, NEW JERSEY

Date	Work Order	Drawing No.	Rev
6/3/16	8300.LONGBEAM	S-6	1
Scale: AS NOTED			

SPECIAL INSPECTIONS REQUIRED

1. STRUCTURAL STEEL – ERECTION & BOLTING
2. STRUCTURAL STEEL – WELDING
3. FINAL INSPECTION

ALL SPECIAL INSPECTIONS SHALL BE PERFORMED BY TECTONIC DURING THE COURSE OF CONSTRUCTION. CONTRACTOR SHALL NOTIFY TECTONIC NOT LESS THAN 7 DAYS IN ADVANCE OF PERFORMING WORK REQUIRING SPECIAL INSPECTION. IF TECTONIC IS NOT NOTIFIED, CONTRACTOR SHALL BE RESPONSIBLE FOR ANY AND ALL TESTING/INSPECTION REQUIRED TO APPROVE SITE AT TECTONIC'S DISCRETION.

REFERENCE DOCUMENTS

"TOWER GENERAL ASSEMBLY", BY CAMP EVANS SIGNAL LABORATORY, U.S. ARMY, DRAWING NO. ES–D–20472, ISSUE H, DATED 3/10/44.

"TOWER TR–20–( ), LOWER ERECTIONAL DIAGRAM", BY BLAW–KNOX FOR CAMP EVANS SIGNAL LABORATORY, U.S. ARMY, DRAWING NO. P–28045 (ES–D–28068), CONTRACT NO. 80–KC1749, ISSUE C, DATED 1/11/43.

"GROUNDING EQUIPMENT MC–508 ASSEMBLY", BY SIGNAL CORPS LABORATORIES, U.S. ARMY, DRAWING NO. ES–D–7427, ISSUE E, DATED 11/19/43.

"ALPINE, 100'–0, SELF SUPPORTING TOWER, ALPINE, N.J., COMPUTER ANALYSIS MODEL", DRAWING NO. V–1981–195, AND "ALPINE 100'–0, SELF SUPPORTING TOWER, ALPINE, N.J., TOWER ELEVATION & SECTIONS", DRAWING NO. V–1981–198, BY MATTHEW J. VLISSIDES & ASSOCIATES, DATED 7/10/81.

"ILLUSTRATED INSPECTION REPORT AND EVALUATION OF THE ALPINE 100 FT. SELF–SUPPORTING TOWER, ALPINE, N.J. FOR EASTERN MICROWAVE, INC.", BY MATTHEW J. VLISSIDES & ASSOCIATES, CONTRACT DATED: 5/14/81 (24 PAGES).

"SITE PLAN" AND "PARTIAL SITE PLANS" FOR ALPINE TOWER, ROUTE 9W, ALPINE, NJ, BY CRETA CONSULTING, INC., DRAWING NOS. SP–1 THRU SP–4, DATED 11/16/01 (4 SHEETS).

"AZIMUTH STAKE–OUT, ALPINE TOWER, ROUTE 9W, ALPINE, NEW JERSEY" BY TECTONIC ENGINEERING & CONSULTANTS P.C., DRAWING NO. SU–101, W.O. 4127, DATED 2/1/08.

GENERAL NOTES

1. THE EXISTING TOWER HAS BEEN VERIFIED TO HAVE SUFFICIENT CAPACITY TO SUPPORT THE PROPOSED INSTALLATION AS LISTED IN THE STRUCTURAL ANALYSIS REPORT BY TECTONIC ENGINEERING & SURVEYING CONSULTANTS P.C., DATED __/__/16.
2. ANTENNA SUPPORTING STRUCTURE HAS BEEN DESIGNED IN CONFORMANCE TO ANSI/TIA–222–G, "STRUCTURAL STANDARDS FOR ANTENNA SUPPORTING STRUCTURES AND ANTENNAS".
3. ALL WORK SHALL CONFORM TO THE REQUIREMENTS OF THE INTERNATIONAL BUILDING CODE, NJ EDITION (LATEST VERSION), AND ALL OTHER APPLICABLE CODES AND ORDINANCES.
4. CONTRACTOR SHALL INSPECT THE EXISTING STRUCTURE PRIOR TO STARTING ANY WORK. IF CONDITIONS OR MATERIALS FOUND IN THE FIELD DIFFER FROM THOSE INDICATED, CONTACT THE ENGINEER FOR APPROVAL.
5. PLANS ARE NOT TO BE SCALED. THE WORK SHALL INCLUDE FURNISHING MATERIALS, EQUIPMENT AND APPURTENANCES, AND LABOR NECESSARY TO EFFECT ALL INSTALLATIONS AS INDICATED ON THE DRAWINGS.
6. DETAILS ARE INTENDED TO SHOW END RESULT OF DESIGN. MINOR MODIFICATIONS MAY BE REQUIRED TO SUIT JOB DIMENSIONS OR CONDITIONS, AND SUCH MODIFICATIONS SHALL BE INCLUDED AS PART OF THE WORK.
7. CONTRACTOR SHALL RECEIVE CLARIFICATION IN WRITING, AND SHALL RECEIVE IN WRITING AUTHORIZATION TO PROCEED BEFORE STARTING WORK ON ANY ITEMS NOT CLEARLY DEFINED OR IDENTIFIED BY THE CONTRACT DOCUMENTS.
8. CONTRACTOR SHALL SUPERVISE AND DIRECT THE WORK USING THE BEST CONSTRUCTION SKILLS AND ATTENTION. CONTRACTOR SHALL BE SOLELY RESPONSIBLE FOR CONSTRUCTION MEANS, METHODS, TECHNIQUES, SEQUENCES AND PROCEDURES AND FOR COORDINATING ALL PORTIONS OF THE WORK UNDER CONTRACT, UNLESS OTHERWISE NOTED.
9. CONTRACTOR SHALL BE RESPONSIBLE FOR THE SAFETY OF THE WORK AREA, ADJACENT AREAS AND OTHERS THAT ARE LIKELY TO BE AFFECTED BY THE WORK UNDER THIS CONTRACT. WORK SHALL CONFORM TO ALL OSHA REQUIREMENTS.
10. ALL WORK SHALL BE PERFORMED IN CALM WEATHER, WITH WIND GUSTS LESS THAN 10 MPH.
11. CONTRACTOR SHALL NOTIFY CSC REPRESENTATIVE OF ANY DISCREPANCIES PRIOR TO ORDERING MATERIALS OR PROCEEDING WITH CONSTRUCTION.
12. INCORRECTLY FABRICATED, DAMAGED OR OTHERWISE MISFITTING OR CONFORMING MATERIALS OR CONDITIONS SHALL BE REPORTED TO THE ENGINEER PRIOR TO REMEDIAL OR CORRECTIVE ACTION. ANY SUCH ACTION SHALL REQUIRE ENGINEER APPROVAL.
13. CONTRACTOR SHALL BE RESPONSIBLE FOR OBTAINING ALL PERMITS AND INSPECTIONS REQUIRED FOR CONSTRUCTION.
14. PROTECT EXISTING ANTENNAS, CABLES AND EQUIPMENT FROM DAMAGE DURING INSTALLATION OF ANTENNAS AND MOUNTS.
15. CONTRACTOR SHALL BE RESPONSIBLE FOR REPAIRING ANY DAMAGE CAUSED BY THE CONSTRUCTION OPERATION.
16. REMOVE FROM THE SITE AND PROPERLY DISPOSE OF ALL EXCESS MATERIALS AND DEBRIS AS DIRECTED BY THE CSC REPRESENTATIVE ON COMPLETION OF WORK.
17. GROUNDING SYSTEM SHALL BE CHECKED AND UPGRADED AS NECESSARY, AS DIRECTED BY THE CSC REPRESENTATIVE.

TECTONIC

Practical Solutions, Exceptional Service

TECTONIC Engineering & Surveying Consultants P.C.

1279 Route 300
Newburgh, NY 12550

Phone: (845) 567–6656
(800) 829–6531

www.tectonicengineering.com

PRELIMINARY
NOT FOR CONSTRUCTION OR ORDERING OF ANY MATERIALS

PLANS ARE NOT TO BE SCALED.

0 1 2 3

ORIGINAL SIZE IN INCHES

COPIES OF THIS DOCUMENT WITHOUT A FACSIMILE OF THE SIGNATURE AND AN ORIGINAL EMBOSSED SEAL OR ORIGINAL STAMP OF THE PROFESSIONAL ENGINEER OR LAND SURVEYOR SHALL NOT BE CONSIDERED VALID COPIES.

THIS DOCUMENT IS PREPARED SPECIFICALLY FOR THE CLIENT AND PROJECT DESIGNATED HEREON. MODIFICATION, ALTERATION, REVISION, DUPLICATION, OR USE WITHOUT THE CONSENT OF *TECTONIC* IS STRICTLY PROHIBITED. COPYRIGHT 2016 *TECTONIC*. ALL RIGHTS RESERVED.

Rev Date	DRAWING CONTROL		
07/22/16	Designed by: IM	Drawn by: NM	Checked by: KZ
	Purpose	Released by	Date
	● For Comment	KZ	6/3/16
	○ For Approval		
	○ For Bid		
	○ For Construction		

ANTONIO A. GUALTIERI, P.E.
N.J. PROFESSIONAL ENGINEER
LICENSE NO. 24GE04543600

NOTES, SPECIAL INSPECTIONS & REFERENCE DOCS

C.S.C. MANAGEMENT, L.L.C./ALPINE TOWER CO.
LONG BEAM YAGI ANTENNA INSTALLATION
EXISTING 112' SELF–SUPPORTING RADAR TOWER
ROUTE 9W
ALPINE, NEW JERSEY

Date	Work Order	Drawing No.	Rev
6/3/16	8300.LONGBEAM	S–7	1
Scale: AS NOTED			

STEEL NOTES

1. DESIGN AND CONSTRUCTION OF STRUCTURAL STEEL SHALL CONFORM TO THE AMERICAN INSTITUTE OF STEEL CONSTRUCTION "SPECIFICATION FOR STRUCTURAL STEEL BUILDINGS, 2010".
2. HOLLOW STRUCTURAL SECTIONS (HSS) SHALL CONFORM TO ASTM A500 "COLD–FORMED WELDED & SEAMLESS CARBON STEEL STRUCTURAL TUBING IN ROUNDS AND SHAPES", GRADE B, OR ASTM A53 "PIPE, STEEL, BLACK AND HOT–DIPPED, ZINC–COATED, WELDED AND SEAMLESS", TYPE E OR S, GRADE B.
3. MISCELLANEOUS STEEL, INCLUDING CHANNELS, ANGLES, PLATES, AND BARS SHALL CONFORM TO ASTM A36 "CARBON STRUCTURAL STEEL", UNLESS OTHERWISE INDICATED.
4. ALL STEEL MATERIALS SHALL BE GALVANIZED AFTER FABRICATION IN ACCORDANCE WITH ASTM A123 "ZINC (HOT–DIP GALVANIZED) COATINGS ON IRON AND STEEL PRODUCTS".
5. STRUCTURAL CONNECTION BOLTS SHALL BE HIGH STRENGTH BOLTS CONFORMING TO ASTM A325 "STRUCTURAL BOLTS, STEEL, HEAT TREATED, 120/105 KSI MINIMUM TENSILE STRENGTH".
6. ALL BOLTS SHALL BE 5/8" DIAMETER, UNLESS OTHERWISE NOTED. BOLTS FOR LADDERS, RAILINGS, AND OTHER MINOR ITEMS SHALL BE NOT LESS THAN 1/2" DIAMETER.
7. U–BOLTS SHALL CONFORM TO ASTM A36 OR A307 "CARBON STEEL BOLTS AND STUDS, 60,000 PSI TENSILE STRENGTH". INSTALL DOUBLE NUTS ON ALL CONNECTIONS.
8. ALL U–BOLTS SHALL BE 1/2" DIAMETER IN 9/16" DIAMETER HOLES, UNLESS OTHERWISE NOTED.
9. MATCHING NUTS SHALL BE HEAVY HEX TYPE, CONFORMING TO ASTM A563, "CARBON AND ALLOY STEEL NUTS". WASHERS, WHERE REQUIRED, SHALL CONFORM TO ASTM F436 "HARDENED STEEL WASHERS". INSTALL PALNUTS ON ALL CONNECTIONS.
10. ALL BOLTS, U–BOLTS AND MISCELLANEOUS HARDWARE SHALL BE GALVANIZED IN ACCORDANCE WITH ASTM A153 "ZINC COATING (HOT–DIP) ON IRON AND STEEL HARDWARE", UNLESS OTHERWISE NOTED.
11. ALL BOLT HOLES SHALL BE DRILLED OR PUNCHED 1/16" LARGER IN DIAMETER THAN THE CONNECTING BOLT, UNLESS OTHERWISE NOTED. BURNING OF HOLES IS NOT PERMITTED.
12. ALL CONNECTIONS TO BE SNUG TIGHT TYPE IN ACCORDANCE WITH THE RESEARCH COUNCIL ON STRUCTURAL CONNECTIONS "SPECIFICATION FOR STRUCTURAL JOINTS USING ASTM A325 OR A490 BOLTS".
13. FIELD WELDING IS PERMITTED ONLY AT LOCATIONS INDICATED OR AS SPECIFICALLY APPROVED BY THE ENGINEER. FIELD WELDING TO THE EXISTING TOWER LEGS IS NOT PERMITTED UNDER ANY CIRCUMSTANCES.
14. CONTRACTOR SHALL COMPLY WITH AWS D1.1 "STRUCTURAL WELDING CODE – STEEL" FOR PROCEDURES, APPEARANCE AND QUALITY OF WELDS, AND FOR METHODS USED IN CORRECTING WELDING. ALL WELDERS AND WELDING PROCESSES SHALL BE QUALIFIED IN ACCORDANCE WITH AWS "STANDARD QUALIFICATION PROCEDURES".
15. REMOVE ALL GALVANIZING IN AREAS TO BE WELDED BY GRINDING. AFTER WELDING, PROTECT ALL EXPOSED STEEL AND WELDS BY COLD GALVANIZING.
16. DAMAGED GALVANIZED SURFACES SHALL BE REPAIRED BY COLD GALVANIZING IN ACCORDANCE WITH ASTM A780 "REPAIR OF DAMAGED AND UNCOATED AREAS OF HOT–DIP GALVANIZED COATINGS".
17. FIELD VERIFY LENGTHS OF ALL MATERIAL PRIOR TO FABRICATION.

PRELIMINARY
NOT FOR CONSTRUCTION OR ORDERING OF ANY MATERIALS

PLANS ARE NOT TO BE SCALED.

0 1 2 3
ORIGINAL SIZE IN INCHES

COPIES OF THIS DOCUMENT WITHOUT A FACSIMILE OF THE SIGNATURE AND AN ORIGINAL EMBOSSED SEAL OR ORIGINAL STAMP OF THE PROFESSIONAL ENGINEER OR LAND SURVEYOR SHALL NOT BE CONSIDERED VALID COPIES.

THIS DOCUMENT IS PREPARED SPECIFICALLY FOR THE CLIENT AND PROJECT DESIGNATED HEREON. MODIFICATION, ALTERATION, REVISION, DUPLICATION, OR USE WITHOUT THE CONSENT OF *TECTONIC* IS STRICTLY PROHIBITED. COPYRIGHT 2016 *TECTONIC*. ALL RIGHTS RESERVED.

Rev Date	DRAWING CONTROL		
07/22/16	Designed by: IM	Drawn by: NM	Checked by: KZ
	Purpose	Released by	Date
	● For Comment	KZ	6/3/16
	○ For Approval		
	○ For Bid		
	○ For Construction		

ANTONIO A. GUALTIERI, P.E.
N.J. PROFESSIONAL ENGINEER
LICENSE NO. 24GE04543600

TECTONIC
Practical Solutions, Exceptional Service
TECTONIC Engineering & Surveying Consultants P.C.
1279 Route 300
Newburgh, NY 12550
Phone: (845) 567–6656
(800) 829–6531
www.tectonicengineering.com

TYP BOLT INSTALLATION DETAIL & STEEL NOTES

C.S.C. MANAGEMENT, L.L.C./ALPINE TOWER CO.
LONG BEAM YAGI ANTENNA INSTALLATION
EXISTING 112' SELF–SUPPORTING RADAR TOWER
ROUTE 9W
ALPINE, NEW JERSEY

Date	Work Order	Drawing No.	Rev
6/3/16	8300.LONGBEAM	S–8	1
Scale: AS NOTED			

COHEN, DIPPELL AND EVERIST, P.C.

EXHIBIT E-10

PREDICTED COVERAGE MAPS

Predicted coverages contour map

Section 73.701(p) and (q) and Section 73.788(c) of the FCC Rules

ZONES OF RECEPTION - 47 CFR 73.701 (p)

V.T.E. s.r.l.
via Salvore 20
21100 Varese VA Italy
VAT ID IT 00585150121
T +39 0332 287389
F +39 0332 830630
info@vtesrl.it www.vtesrl.it

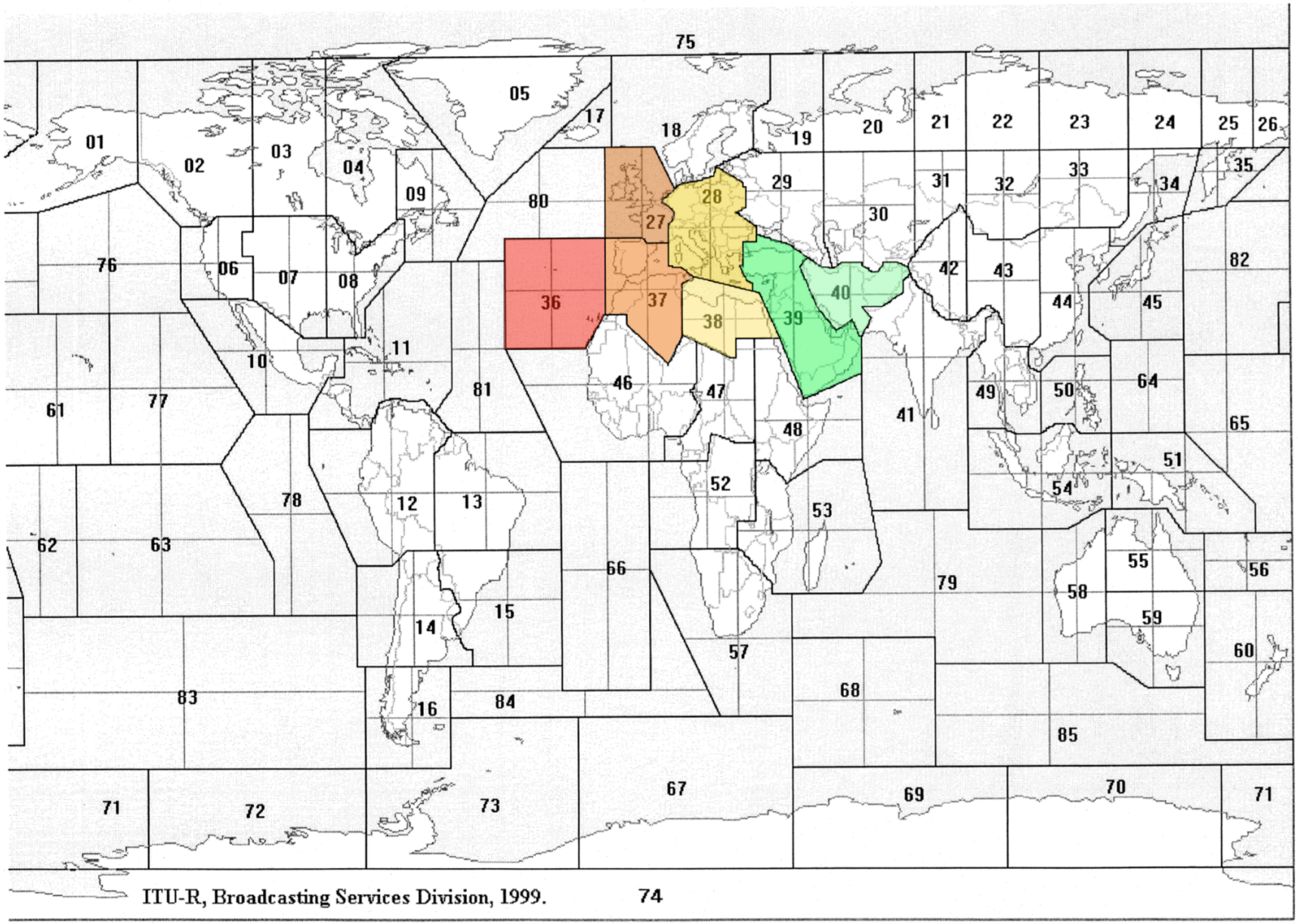

Predicted coverages contour map

Section 73.701(p) and (q) and Section 73.788(c) of the FCC Rules

FIELD STRENGTH - 47 CFR 73.701 (q) - Reference month July

V.T.E. s.r.l.
via Salvore 20
21100 Varese VA Italy
VAT ID IT 00585150121
T +39 0332 287389
F +39 0332 830630
info@vtesrl.it www.vtesrl.it

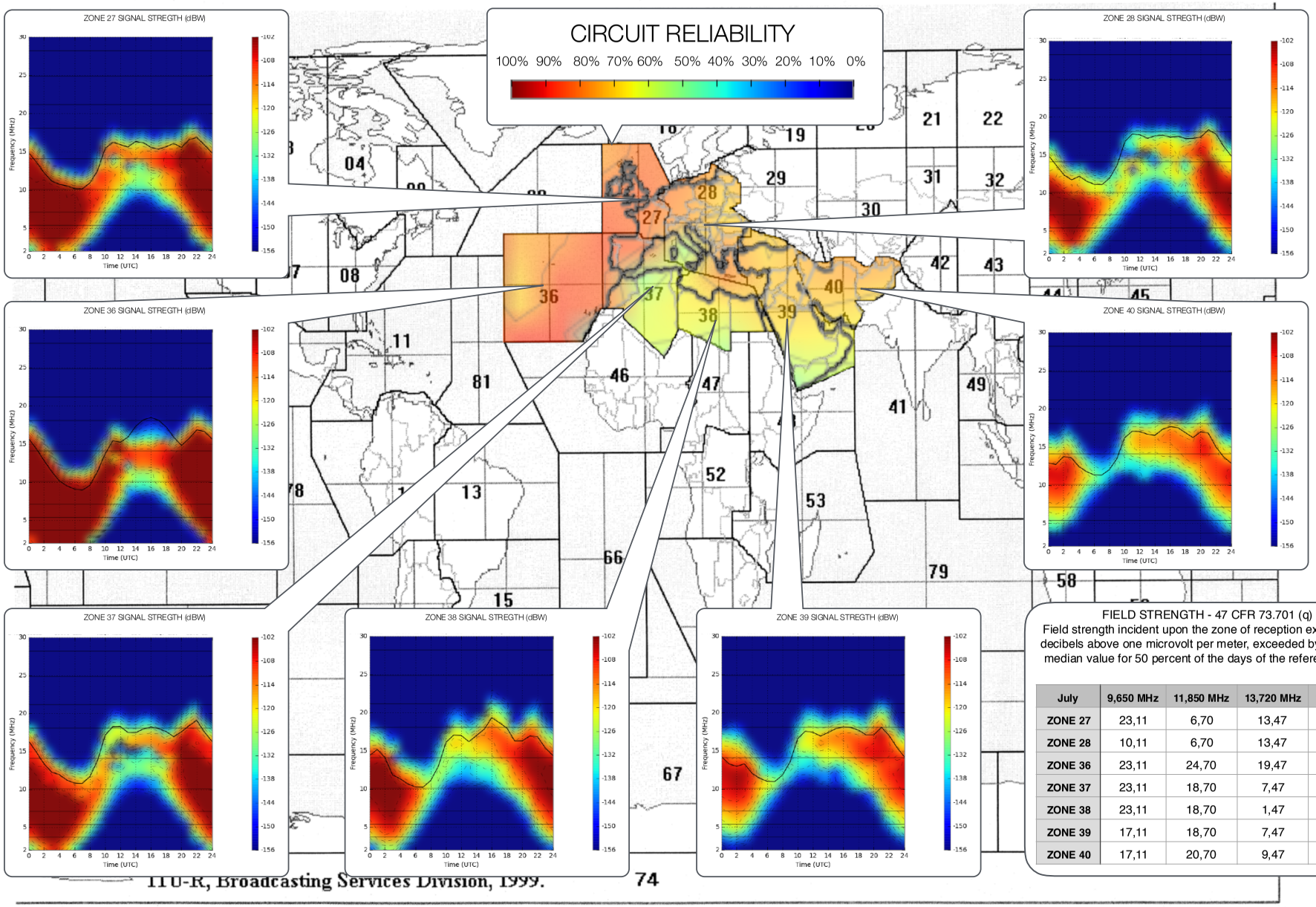

FIELD STRENGTH - 47 CFR 73.701 (q)

Field strength incident upon the zone of reception expressed in decibels above one microvolt per meter, exceeded by the hourly median value for 50 percent of the days of the reference mont.

July	9,650 MHz	11,850 MHz	13,720 MHz	15,450 MHz
ZONE 27	23,11	6,70	13,47	12,00
ZONE 28	10,11	6,70	13,47	12,00
ZONE 36	23,11	24,70	19,47	8,00
ZONE 37	23,11	18,70	7,47	3,00
ZONE 38	23,11	18,70	1,47	12,00
ZONE 39	17,11	18,70	7,47	18,00
ZONE 40	17,11	20,70	9,47	12,00

Predicted coverages contour map

Section 73.701(p) and (q) and Section 73.788(c) of the FCC Rules

FIELD STRENGTH - 47 CFR 73.701 (q) - Reference month December

V.T.E. s.r.l.
via Salvore 20
21100 Varese VA Italy
VAT ID IT 00585150121
T +39 0332 287389
F +39 0332 830630
info@vtesrl.it www.vtesrl.it

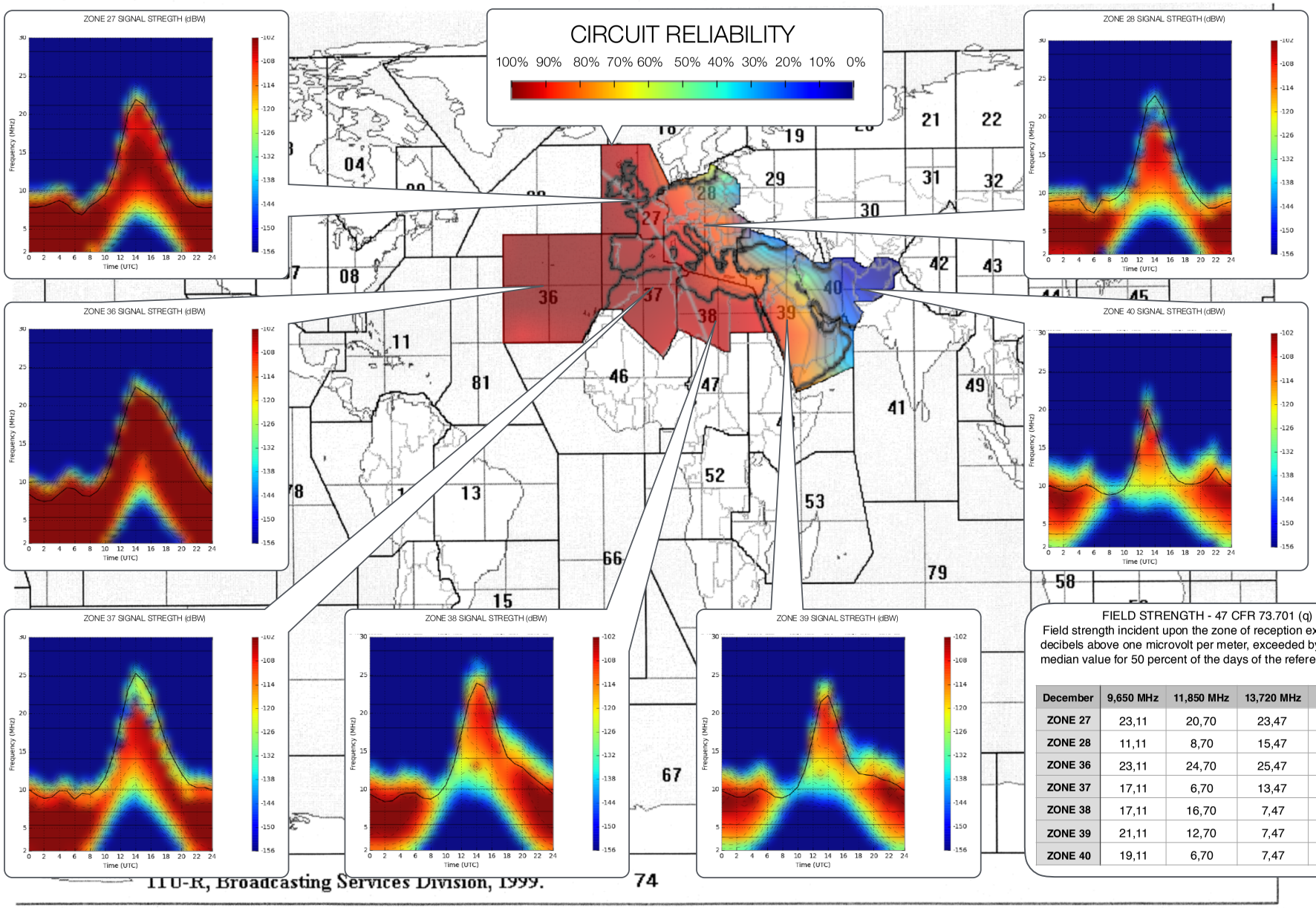

FIELD STRENGTH - 47 CFR 73.701 (q)

Field strength incident upon the zone of reception expressed in decibels above one microvolt per meter, exceeded by the hourly median value for 50 percent of the days of the reference month.

December	9,650 MHz	11,850 MHz	13,720 MHz	15,450 MHz
ZONE 27	23,11	20,70	23,47	24,00
ZONE 28	11,11	8,70	15,47	20,00
ZONE 36	23,11	24,70	25,47	26,00
ZONE 37	17,11	6,70	13,47	24,00
ZONE 38	17,11	16,70	7,47	12,00
ZONE 39	21,11	12,70	7,47	14,00
ZONE 40	19,11	6,70	7,47	18,00

COHEN, DIPPELL AND EVERIST, P.C.

EXHIBIT E-11

OTHER BROADCAST STATIONS

AUTHORIZED

WITHIN 5 MILES OF

PROPOSED OPERATION

EXHIBIT E – 11c	EXHIBIT E – 11d
EXHIBIT E – 11b	SITE EXHIBIT E – 11a

MAP INDEX
FOR
E - 11
MARCH 2017

16.09 km (10 Miles) RADIUS

EASTERN UNITED STATES 1:250,000

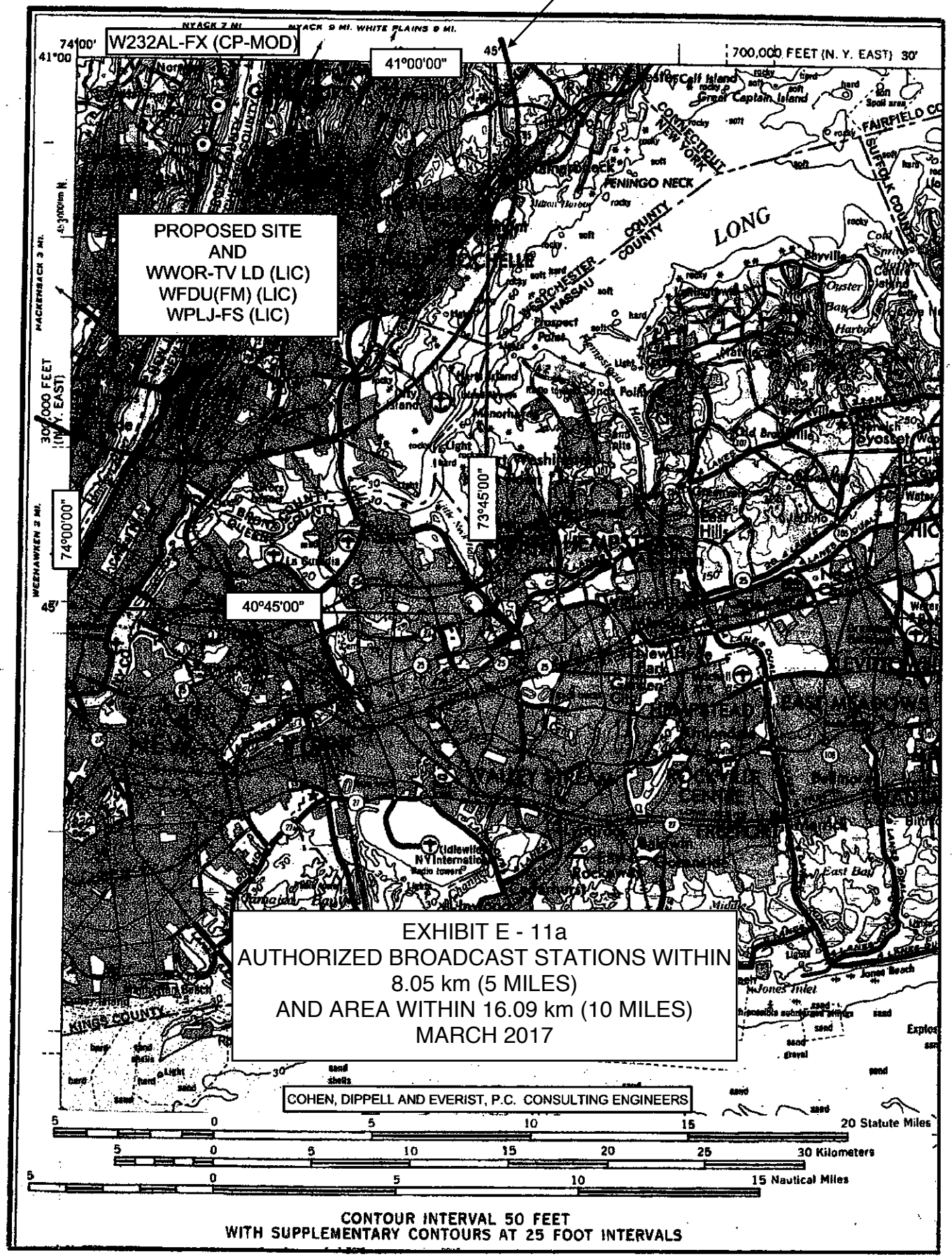

16.09 km (10 Miles) RADIUS

NK 18-11
SERIES V501

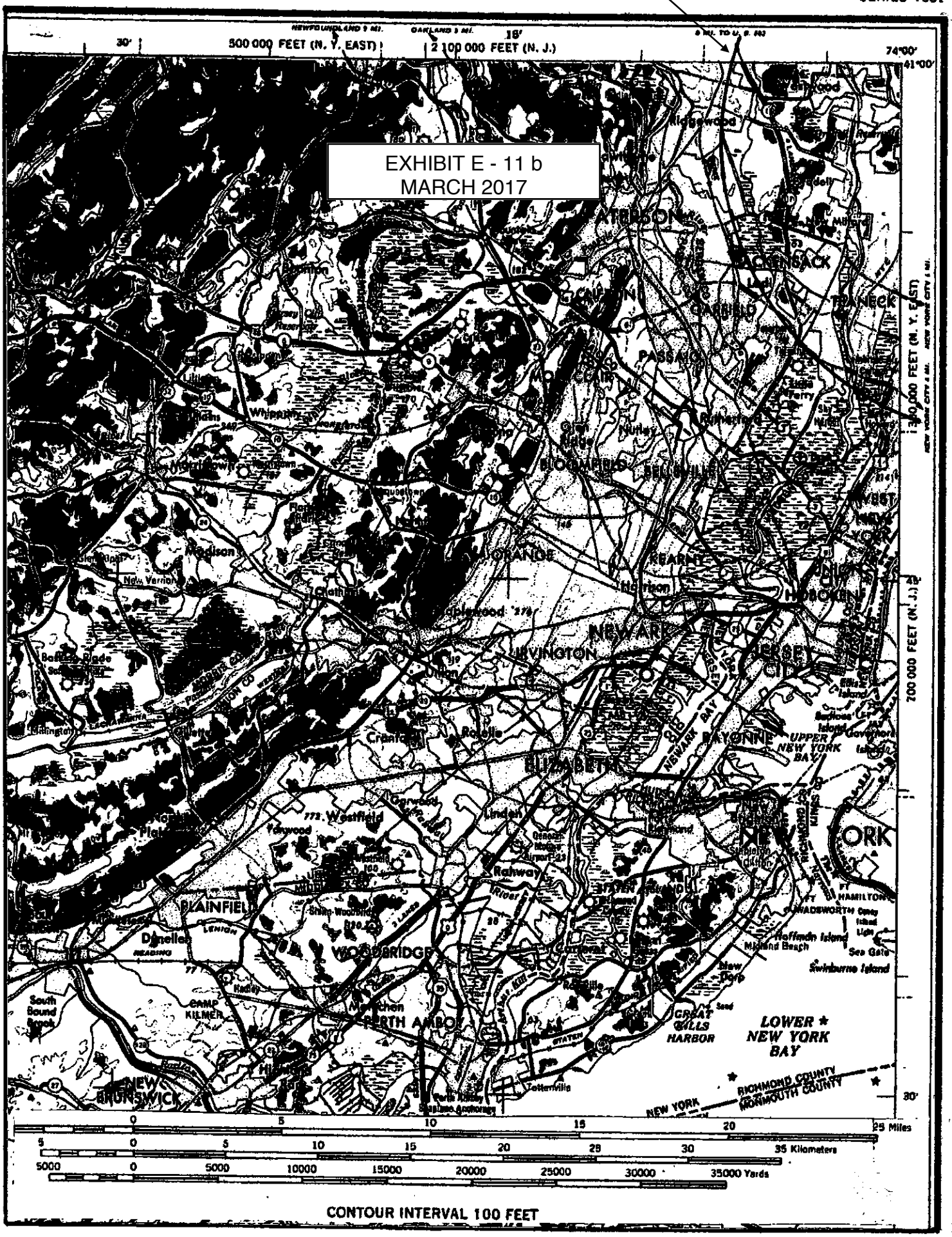

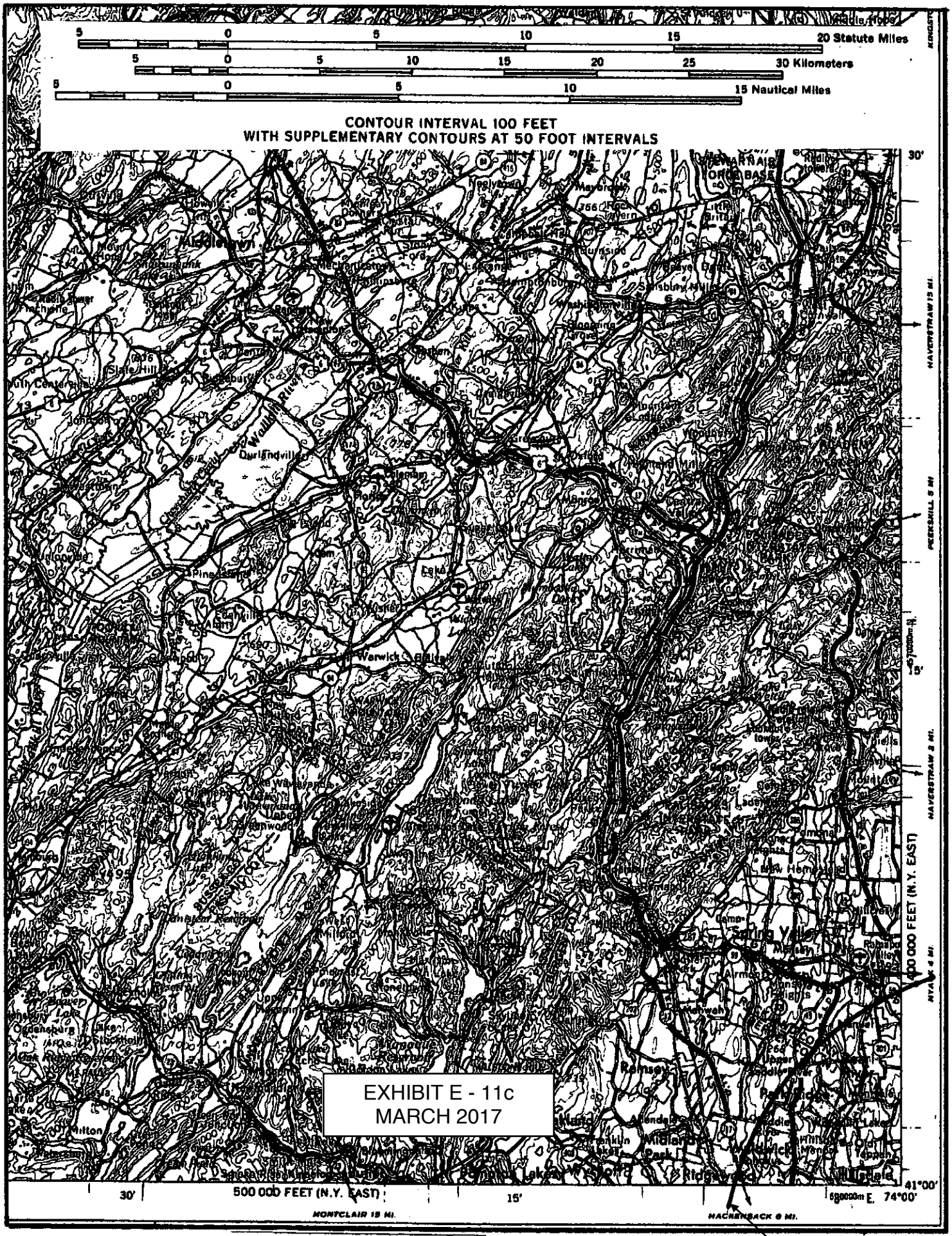

INTERIOR—GEOLOGICAL SURVEY, WASHINGTON, D.C.—1966

16.09 km (10 Miles) RADIUS

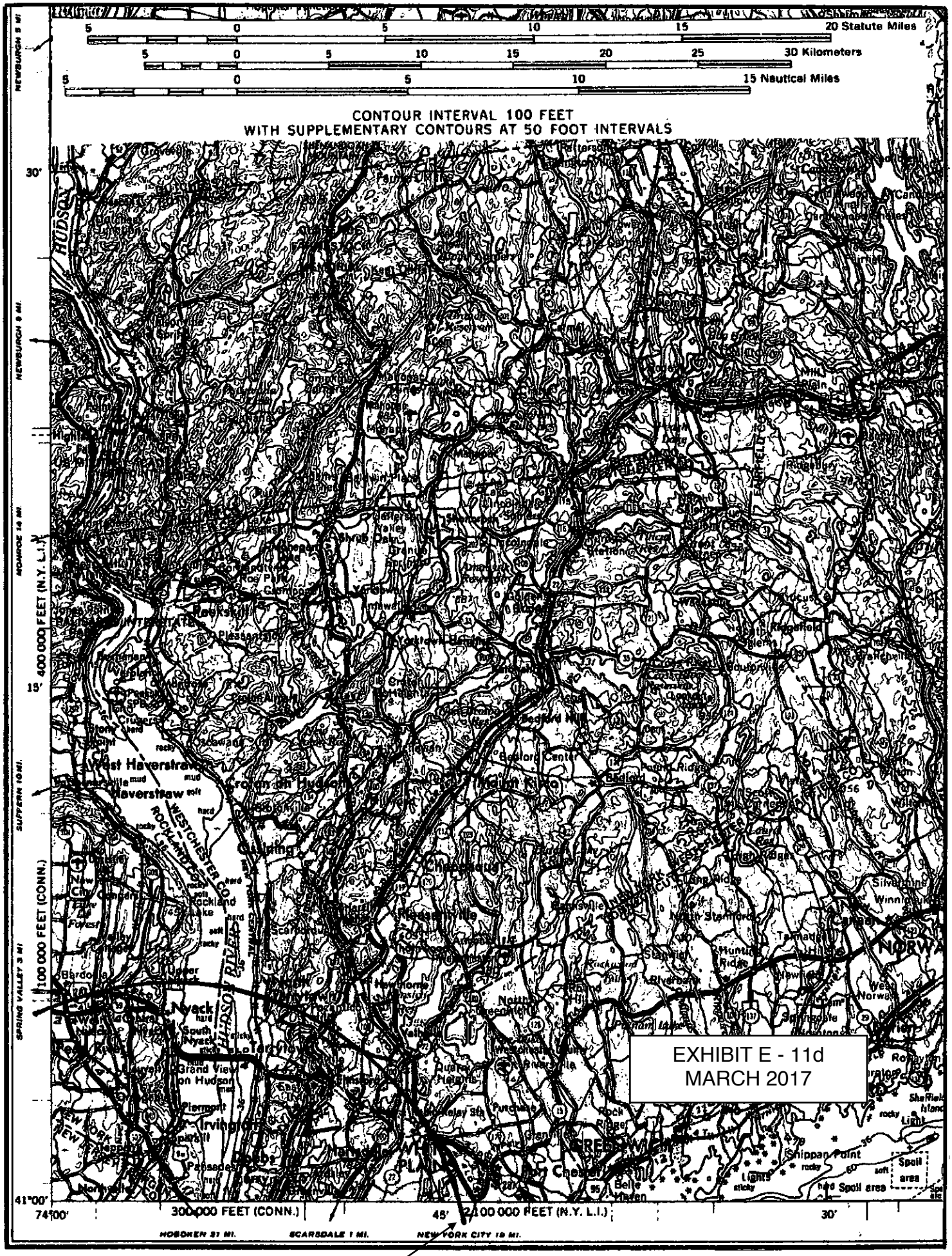

EXHIBIT E - 11d
MARCH 2017

16.09 km (10 Miles) RADIUS

COHEN, DIPPELL AND EVERIST, P.C.

TABLE I
FM AND TV STATIONS WITHIN 5 MILES (8.05 KM) OF
TURMS TECH LLC, ALPINE, NEW JERSEY
MARCH 2017

N 40° 57' 40.38"
W 73° 55' 23.97"
NAD-27

AM
NONE WITHIN 5 MILES

FM

Channel	Call	City/State	ERP kW	HAAT meters	Coordinates NAD-27	Frequency MHz	Distance km
206B1	WFDU(FM) Lic	Teaneck, NJ	3.0	195	40°57'39" 73°55'23"	89.1	0.05
232D	W232AL FX CP Mod	Pomona, NY	0.055	--	40°58'44.9" 73°54'55"	94.3	2.10
238B	WPLJ FS Lic	New York, NY	19.0	246	40°57'39" 73°55'23"	95.5	0.05

TV

Channel	Call	City/State	ERP kW	RCAMSL meters	Coordinates	Distance km
34	WWOR-TV LD Lic	Secaucus, NJ	15	277.5	40°57'38.6" 73°55'22.5"	0.07