PUBLIC VERSION

Table of Exhibits in Support of AT&T's Formal Complaint

Ex.	Description
1	Letter from Lisa B. Griffin to James F. Bendernagel, Michael J. Hunseder, James U. Troup, & Tony S. Lee (dated Sept. 27, 2016)
2	INS Worksheet (Aureon_02696-02708)
3	INAD Tariff F.C.C. No. 1 (filed Aug. 10, 1988)
4	AT&T Forbearance Pet., WC Docket No. 16-363 (filed Sept. 30, 2016)
5	Referral Order, *INS v. AT&T Corp.*, No. 14-3439 (D.N.J. Aug. 4, 2016)
6	Order, *INS v. AT&T Corp*., No. 15-4093 (3d Cir. Aug. 4, 2016)
7	Form 499 Filer Database, Detailed Information for INS
8	AT&T GLCC Complaint, FCC Docket No. 16-170 (filed August 16, 2016)
9	Form 499 Filer Database, Detailed Information for AT&T
10	FCC, Equal Access Report (C.C.B. Nov. 3, 1997)
11	Excerpted Pages from the Deposition of Mark Shlanta (taken June 3-4, 2015)
12	MIEAC Order, File No. W-P-C-6400 (rel. Aug. 22, 1990)
13	Iowa Network Article, Des Moines Register (Mar. 29, 2016)
14	Aureon Website ("Technology," "HR," and "Contact Center")
15	INS 2004 Tariff Filing (filed June 24, 2004)
16	INS 2006 Tariff Filing (filed June 26, 2006)
17	INS 2008 Tariff Filing (filed June 24, 2008)
18	INS 2010 Tariff Filing (filed June 16, 2010)
19	INS 2012 Tariff Filing (filed June 26, 2012)
20	INS 2013 Tariff Filing (filed June 17, 2013)
21	INS 2014 Tariff Filing (filed June 16, 2014)

Ex.	Description
22	INS 2016 Tariff Filing (filed June 16, 2016)
23	STA, Omnitel Communications (Aureon_01071-88) (dated Aug. 20, 2004)
24	STA, Louisa Communications (Aureon_01233-49) (dated Aug. 27, 2004)
25	STA, BTC, Inc. (Aureon_00348-64) (dated Jan. 26, 2005)
26	STA, Premier Communications (Aureon_00904-21) (dated Sept. 1, 2006)
27	Excerpted Pages from the Deposition of Robert Sherlock (taken Feb. 10, 2010)
28	Aureon Website (Network Transport)
29	Aureon Website (Data Network Services)
30	Aureon Website (Wholesale Services)
31	TA, Great Lakes Communications Corp. (Aureon_00090-100) (dated July 1, 2005)
32	TA, Omnitel Communications (Aureon_01089-01101) (dated Sept. 20, 2004)
33	TA, Louisa Communications (Aureon_01250-61) (dated Aug. 27, 2004)
34	TA, BTC, Inc. (Aureon_00365-76) (dated Jan. 26, 2005)
35	TA, Premier Communications, Inc. (Aureon_00922-34) (dated Sept. 1, 2016)
36	TA, Interstate Cablevision Company (Aureon_01118-28) (dated July 22, 2015)
37	TA, FMTC-I35, Inc. (Aureon_01270-77) (dated Feb. 1, 2017)
38	INS Forbearance Opp., WC Docket No. 16-363 (filed Dec. 2, 2016)
39	INS Mot. to Dismiss, *INS v. AT&T Corp.*, No. 14-3439 (D.N.J. Aug. 22, 2014)
40	INS Mot. for Summ. J., *INS v. AT&T Corp.*, No. 14-3439 (D.N.J. May 6, 2015)
41	INAD Tariff F.C.C. No. 1, 10th Revised Page 145 (issued June 24, 2008)
42	INAD Tariff F.C.C. No. 1, 11th Revised Page 145 (issued June 26, 2012)
43	INAD Tariff F.C.C. No. 1, 12th Revised Page 145 (issued June 17, 2013)
44	INS Complaint, *INS v. AT&T Corp.*, No. 14-3439 (D.N.J. May 30, 2014)

Ex.	Description
45	AT&T Answer and Counterclaims, *INS v. AT&T Corp.*, No. 14-3439 (D.N.J. Aug. 4, 2014)
46	INS April 2017 Revised Tariff Filing (filed Apr. 14, 2017)
47	INS May 2017 Revised Tariff Filing (filed May 16, 2017)
48	Habiak GLCC Declaration (filed August 16, 2016)
49	AT&T-SDN Service Agreement (dated Sept. 18, 2014)
50	Schedule A Agreement, GLCC (Aureon_00169) (dated May 27, 2009)
51	Schedule A Agreements, GLCC (Aureon_00139-51) (dated July 27 – Dec. 8, 2011)
52	AT&T Supp. Brief, *AT&T Corp. v. Great Lakes Commc'ns Corp.*, FCC Docket No. 16-170 (filed Jan. 10, 2017)
53	Letter from James U. Troup & Brian D. Robinson to Sherly Todd (dated Apr. 30, 1998)
54	INS Iowa Tariff (Iowa State Utilities Board) No. 1 (dated Dec. 2, 1988)
55	INS Opening Brief, *INS v. Qwest Corp.*, No. 02-40156 (S.D. Iowa Aug. 11, 2004)
56	Letter from James U. Troup and Tony S. Lee to Michael J. Hunseder and James F. Bendernagel (dated March 10, 2017)
57	FCC, *Trends in Telephone Service* (W.C.B. Sept. 2010)
58	Petition for Declaratory Ruling, WC Docket No. 09-152 (filed Aug. 14, 2009)
59	Letter from James U. Troup and Tony S. Lee to Michael J. Hunseder and James F. Bendernagel (dated Mar. 23, 2017)
60	GLCC FCC Tariff No. 2 (filed Jan. 11, 2012)
61	INS Reply, *INS v. AT&T Corp.*, No. 14-3439 (D.N.J. Oct. 10, 2014)
62	Comments of the Equal Access Service Providers, *In re High-Cost Universal Serv. Support, et al.*, WC Docket No. 05-337 (filed Nov. 26, 2008)
63	Brief for *Amicus Curiae* FCC, *Paetec Comm'cns, Inc. v. MCI Comm'cns Servs., Inc.* (3d Cir. Mar. 14, 2012)

Ex.	Description
64	Order, *In re GS Texas Ventures, LLC Tariff F.C.C. No. 1*, WCB/Pricing File No. 14-2 (rel. Sept. 8, 2014)
65	INS Amendment to GLCC TA (Aureon_00199-200) (dated June 18, 2014)
66	AT&T Reply Legal Analysis, *AT&T Corp. v. Great Lakes Commc'ns Corp.*, FCC Docket No. 16-170 (filed Oct. 6, 2016)
67	Declaration of Peter D. Copeland (dated May 1, 2007)
68	Excerpted Pages from the Deposition of Thomas Lovell (taken Oct. 29, 2009)
69	Excerpted Pages from the Deposition of Dennis Creveling (taken Feb. 10, 2010)
70	INS 2010 Income Statement Summary (Aureon_01537-41)
71	INS 2012 Income Statement Summary (Aureon_01613-16)
72	INS 2013 Income Statement Summary (Aureon_01939-42)
73	INS Reply Comment, *In re Petition of AT&T Servs., Inc. for Forbearance*, WC Docket No. 16-363 (filed Dec. 19, 2016)
74	INS Worksheets (Aureon_01934-38)
75	INS Worksheets (Aureon_02180-85)
76	INS Worksheets (Aureon_02394-99)
77	Direct Connection Cost Analysis (prepared Aug. 15, 2016)
78	Email from Jack Habiak to Jon Hedgecock (ATT-000740) (dated Nov. 8, 2013)
79	Email from Jack Habiak to Dennis Creveling (ATT-000754) (dated Feb. 28, 2014)
80	AT&T Billing Summary (ATT-000999)
81	INS Operating Expense Summary (2016) (Aureon_02468-02581)
82	C.V. of Daniel Rhinehart

Exhibit 1

Letter from Lisa B. Griffin to James F. Bendernagel, Michael J. Hunseder, James U. Troup, & Tony S. Lee (dated Sept. 27, 2016)

PUBLIC VERSION

FEDERAL COMMUNICATIONS COMMISSION
Enforcement Bureau
Market Disputes Resolution Division
445 12th St., S.W.
Washington, D.C. 20554
Fax No. (202) 418-0435

Via Email and U.S. Mail

September 27, 2016

James F. Bendernagel
Michael J. Hundseder
SIDLEY & AUSTIN LLP
1501 K Street, NW
Washington, DC 20005
jbendernagel@sidley.com
mhunseder@sidley.com

James U. Troup
Tony S. Lee
Fletcher, Heald & Hildreth
1300 North 17th Street
Suite 1100
Arlington, VA 22209
troup@fhhlaw.com
lee@fhhlaw.com

Re: *Iowa Network Services, Inc. v. AT&T Corp.*, No. 14-cv-03439 (D.N.J.)

Dear Counsel:

On May 30, 2014, Iowa Network Services, Inc. (INS) filed a collection action against AT&T Corp. (AT&T) in the United States District Court for the District of New Jersey (Court) seeking to recover unpaid amounts on an account for Centralized Equal Access (CEA) service that INS provides to AT&T.[1] AT&T asserted affirmative defenses and counterclaims against INS on August 4, 2014, alleging, among other things, that INS's tariff for the CEA service violates the Commission's rules and, consequently, that INS improperly billed AT&T under that tariff.[2] AT&T subsequently moved the Court to refer several issues to the Commission relating to its counterclaims.[3] INS opposed AT&T's request.[4] On October 14, 2015, the Court granted AT&T's

[1] Complaint, *Iowa Network Serv., Inc. v. AT&T Corp.*, No. 14-cv-03439 (D.N.J.) (filed May 30, 2014).

[2] Defendant's Answer and Counterclaims, *Iowa Network Serv., Inc. v. AT&T Corp.*, No. 14-cv-03439 (D.N.J.) (filed Aug. 4, 2014).

[3] Brief of AT&T Corp. on Primary Jurisdiction, *Iowa Network Serv., Inc. v. AT&T Corp.*, No. 14-cv-03439 (D.N.J.) (filed Aug. 5, 2015) (AT&T's Primary Jurisdiction Motion). AT&T identified the specific issues to be referred in Appendix A to its Brief.

[4] INS Brief on Primary Jurisdiction, *Iowa Network Serv., Inc. v. AT&T Corp.*, No. 14-cv-03439 (D.N.J.) (filed Aug. 19, 2015) (INS's Primary Jurisdiction Brief).

motion.[5] INS appealed the Court's ruling to the United States Court of Appeals for the Third Circuit, but that court dismissed the appeal for lack of appellate jurisdiction.[6]

INS and AT&T advised the Commission of the Court's referral on August 5, 2016, and August 12, 2016, respectively.[7] Commission staff discussed the dispute and referral with the parties in a status conference call on August 25, 2016. At the request of Commission staff, the parties filed briefs on September 15, 2016, setting forth their views concerning the manner in which the Court's referral should be effectuated at the Commission – *i.e.*, by a formal complaint or a petition for declaratory ruling. AT&T contends that the "appropriate way to effectuate the primary jurisdiction referral . . . is to have AT&T file a formal complaint, under Section 208 of the Act, against [INS]."[8] In contrast, INS argues that the Commission "should effectuate the primary jurisdiction referral by commencing a declaratory ruling proceeding."[9]

After considering the parties' submissions, the pleadings in the Court case, and based upon our experience handling primary jurisdiction referrals and formal complaints, we believe that a formal complaint is the appropriate process to effectuate the Court's referral. Contrary to INS's assertions, we do not consider there to be any jurisdictional impediments to our proceeding in this manner.[10]

To be sure, the Referral Order states that "AT&T's motion to stay the *matter* and refer it to the FCC is granted."[11] However, AT&T requested that the Court refer issues relating to its affirmative defenses and counterclaims.[12] There is no suggestion in AT&T's motion – or in the Referral Order – that, in using the word "matter," the Court referred INS's collection action claims to the Commission. INS's collection action claims remain pending – albeit stayed – before the Court.[13]

Similarly, we do not think there are Section 207 considerations weighing against AT&T's filing of a complaint here. INS is the complainant in the district court proceeding, having elected

---

[5] Memorandum Order, *Iowa Network Serv., Inc. v. AT&T Corp.*, No. 14-cv-03439 (D.N.J. Oct. 14, 2015) (Referral Order).

[6] Order, *Iowa Network Serv., Inc. v. AT&T Corp.*, No. 15-4093 (3d Cir. Feb. 16, 2016).

[7] Letter to Marlene H. Dortch, Secretary, FCC, from James U. Troup, counsel for INS (dated Aug. 5, 2016); Letter to Christopher Killion, Chief/MDRD, from Michael J. Hundseder, counsel for AT&T (dated Aug. 12, 2016).

[8] Letter to Christopher Killion, Chief/MDRD, from Michael J. Hundseder, counsel for AT&T (dated Sept. 15, 2016) at 1.

[9] Plaintiff's Brief on Procedural Issues Regarding Primary Jurisdiction Referral (dated Sept. 15, 2016) (INS's Brief) at 1.

[10] *See* INS's Brief at 12-14, 16-18. INS has acknowledged that an administrative complaint filed by AT&T at the Commission is appropriate. *See* INS's Primary Jurisdiction Brief at 6, n.1 ("[T]he Court here must consider whether it should stay the [court case] to allow AT&T to file an administrative complaint at the FCC").

[11] Referral Order at 15 (emphasis added).

[12] *See* AT&T's Primary Jurisdiction Motion, Appendix A.

[13] Indeed, INS made it clear in its arguments before the Court that the Commission could not entertain a referral of INS's collection action claims. *See* INS's Primary Jurisdiction Brief at 18-19.

the forum through the filing of its complaint. AT&T's filing of affirmative defenses and counterclaims in response to INS's complaint is immaterial.[14] Indeed, as the Commission recently noted, Section 207 "does not apply in the context of a primary jurisdiction referral."[15]

Accordingly, we order AT&T to file a formal complaint to effectuate the Referral Order. We will coordinate with the parties regarding case management and other issues prior to the filing of AT&T's complaint.

This letter ruling is issued pursuant to Sections 4(i), 4(j), and 208 of the Act, 47 U.S.C. §§ 154(i), 154(j), 208, Sections 1.3 and 1.720-1.736 of the Commission's rules, 47 C.F.R. §§ 1.3, 1.720-1.736, and the authority delegated in Sections 0.111 and 0.311 of the Commission's rules, 47 C.F.R. §§ 0.111, 0.311.

FEDERAL COMMUNICATIONS COMMISSION

Lisa B. Griffin /AD

Lisa B. Griffin
Deputy Chief, EB/MDRD
(202) 418-7273
lisa.griffin@fcc.gov

[14] INS made the same Section 207 arguments to the Court in its Primary Jurisdiction Brief. *See* INS's Primary Jurisdiction Brief at 23-25. Regardless, the Court granted AT&T's primary jurisdiction request.

[15] *AT&T Corp. v. All American Tel. Co.*, Memorandum Opinion and Order, 30 FCC Rcd 8958, 8960, para. 72 (2015). To the extent the Commission's 2002 dicta suggests that Section 207 could serve as a bar to a primary jurisdiction referral to the Commission where a defendant has asserted an affirmative defense or counterclaim in district court, we disagree. *See Beehive Tel. Co., Inc. v. AT&T Corp.*, Memorandum Opinion and Order, 17 FCC Rcd 11641, 11653, para. 24 n.87 (2002).

Exhibit 2

INS Worksheet
(Aureon_02696-02708)

HIGHLY CONFIDENTIAL MATERIALS OMITTED

Exhibit 3

INAD Tariff
F.C.C. No. 1
(filed Aug. 10, 1988)

CENTRALIZED EQUAL ACCESS SERVICE

Regulations, Rates and Charges applying to the provision of interstate Centralized Equal Access Service within the certificated operating territory of:

Iowa Network Access Division
in the State of
Iowa
as provided herein
Rate Center: Des Moines, Iowa

Service is provided by means of wire, radio, satellite, fiber optics or other suitable technology or combination thereof.
All material in this tariff is new.

4201 Corporate Drive
West Des Moines, Iowa 50266-5906

CENTRALIZED EQUAL ACCESS SERVICE

CHECK SHEET

Title Page 1 and Page 1 to 188 and Supplement No. 7, inclusive, of this tariff are effective as of the date shown. Original and revised pages as named below contain all changes from the original tariff that are in effect on the date hereof.

Page	Number of Revision Except as Indicated	Page	Number of Revision Except as Indicated	Page	Number of Revision Except as Indicated	Page	Number of Revision Except as Indicated
1*	28th	28	1st	54	Original	79	Original
1.1*	13th	29	1st	55	Original	80	Original
2	1st	30	Original	56	1st	81	Original
3	Original	31	Original	57	Original	82	Original
4	1st	32	Original	58	1st	83	2nd
5	3rd	33	1st	59	1st	84	1st
6	3rd	34	Original	60	Original	85	1st
7	1st	35	Original	61	3rd	86	2nd
8	1st	36	Original	61.1	Original	87	1st
9	Original	37	2nd	62	1st	87.1	Original
10	1st	38	1st	63	3rd	88	4th
11	2nd	39	3rd	63.1	1st	88.1	Original
12	2nd	40	3rd	64	1st	88.2	Original
13	7th	40.1	Original	64.1	2nd	89	4th
13.1	1st	41	Original	65	2nd	89.1	1st
14	1st	42	1st	66	Original	89.2	1st
15	1st	43	3rd	67	Original	89.3	1st
16	2nd	43.1	Original	68	Original	89.4	1st
17	Original	44	Original	69	1st	90	2nd
18	Original	45	1st	69.1	1st	91	Original
19	1st	46	1st	70	Original	92	2nd
20	1st	46.1	Original	71	Original	93	2nd
21	2nd	47	Original	72	3rd	94	1st
21.1	1st	48	Original	72.1	1st	95	1st
22	Original	49	Original	73	1st	96	1st
23	Original	50	1st	74	Original	97	1st
24	Original	51	2nd	75	Original	98	1st
25	Original	52	2nd	76	1st		
26	Original	53	2nd	77	Original		
27	Original	53.1	Original	78	1st		

* New or Revised page

CENTRALIZED EQUAL ACCESS SERVICE

CHECK SHEET

Title Page 1 and Page 1 to 188 and Supplement No. 7, inclusive, of this tariff are effective as of the date shown. Original and revised pages as named below contain all changes from the original tariff that are in effect on the date hereof.

Page	Number of Revision Except as Indicated	Page	Number of Revision Except as Indicated	Page	Number of Revision Except as Indicated	Page	Number of Revision Except as Indicated
99	1st	123	Original	147	1st	168	Original
100	1st	124	1st	147.1	Original	169	Original
101	1st	125	1st	148	4th	170	Original
102	Original	126	Original	148.1	Original	171	Original
103	Original	127	Original	149	4th	172	Original
104	2nd	128	Original	149.1	1st	173	1st
105	1st	129	1st	150	4th	174	1st
105.1	1st	129.1	1st	150.1	Original	175	Original
105.2	1st	130	1st	151	4th	176	Original
105.3	Original	131	3rd	151.1*	2nd	177	1st
106	Original	132	1st	151.2*	Original	178	1st
107	Original	133	Original	152	3rd	179	Original
108	2nd	134	1st	153	4th	180	1st
109	Original	135	1st	153.1	2nd	181	1st
110	Original	136	2nd	153.2	Original	182	Original
111	Original	136.1	2nd	154	3rd	183	Original
112	1st	136.1.1	Original	155	4th	184	Original
113	1st	136.2	1st	156	3rd	185	Original
114	1st	137	1st	157	Original	186	Original
115	1st	138	2nd	158	Original	187	Original
116	1st	139	1st	159	Original	188	Original
117	Original	140	2nd	160	Original		
118	1st	140.1	Original	161	Original		
118.1	Original	141	1st	162	Original		
119	1st	142	3rd	163	Original		
120	1st	143	Original	164	Original		
120.1	2nd	144	Original	165	Original		
121	1st	145	12th	166	Original		
122	Original	146	Original	167	Original		

* New or Revised page

CENTRALIZED EQUAL ACCESS SERVICE

TABLE OF CONTENTS (Z)

Page No.

Check Sheet 1

Concurring Carriers 11

Connecting Carriers 11

Other Participating Carriers 11

Registered Service Marks/Registered Trademarks..... 11

Explanation of Symbols 12

Explanation of Abbreviations 12

Reference to Technical Publications 14

1. Application of Tariff 16

2. General Regulations 17

2.1 Undertaking of Iowa Network 17

2.1.1 Scope 17
2.1.2 Limitations 17
2.1.3 Liability 19
2.1.4 Provision of Services 21
2.1.5 Installation and Termination of Services 22
2.1.6 Maintenance of Services 22
2.1.7 Changes and Substitutions 22
2.1.8 Refusal and Discontinuance of Service 23
2.1.9 Reserved for Future Use 24
2.1.10 Notification of Service-Affecting Activities 24
2.1.11 Coordination with Respect to Network Contingencies 25
2.1.12 Provision and Ownership of Telephone Numbers 25

CENTRALIZED EQUAL ACCESS SERVICE

TABLE OF CONTENTS (Cont'd)

Page No.

2.2 Use …….. 26

2.2.1 Reserved for Future Use …….. 26
2.2.2 Interference or Impairment …….. 26
2.2.3 Unlawful Use …… 27

2.3 Obligations of the Customer …..... 28

2.3.1 Damages …..... 28
2.3.2 Ownership of Facilities and Theft ……..... 28
2.3.3 Reserved for Future Use …….. 28
2.3.4 Reserved for Future Use …….. 28
2.3.5 Reserved for Future Use …….. 28
2.3.6 Availability for Testing …..... 29
2.3.7 Balance …..... 29
2.3.8 Design of Customer Services ……..... 29
2.3.9 References to Iowa Network. …..... 29
2.3.10 Reserved for Future Use …….. 30
2.3.11 Claims and Demands for Damages 30
2.3.12 Reserved for Future Use …….. 31
2.3.13 Coordination with Respect to Network Contingencies 31
2.3.14 Jurisdictional Report Requirements 31
2.3.15 Determination of Intrastate Rates and Charges for Mixed Interstate and Intrastate Access Service 37
2.3.16 Reserved for Future Use …….. 37

2.4 Payment Arrangements and Credit Allowances …..... 38

2.4.1 Payment of Rates, Charges and Deposits ……..... 38
2.4.2 Minimum Periods ……..... 44
2.4.3 Cancellation of an Order for Service 44
2.4.4 Credit Allowance for Service Interruptions 44
2.4.5 Reserved for Future Use …….. 47
2.4.6 Reserved for Future Use …….. 47
2.4.7 Title or Ownership Rights 47
2.4.8 Rating and Billing of Access Services Provided by Iowa Network & Routing Exchanges Carriers …..... 47

CENTRALIZED EQUAL ACCESS SERVICE

TABLE OF CONTENTS (Cont'd)

Page No.

2.5 Connections 49

2.5.1 General 49
2.5.2 Reserved for Future Use 49

2.6 Definitions (Cont'd) 50

Access Code 50
Access Minutes 50
Access Tandem 50
Answer/Disconnect Supervision 50
Attenuation Distortion 51
Balance (100 Type) Test Line 51
Bit 51
Business Day 51
Busy Hour Minutes of Capacity (BHMC) 51
Call 52
CCS 52
Central Office 52
Central Office Prefix 52
Channel 52
Channelize 52
C-Message Noise 53
C-Notched Noise 53
Common Channel Signaling Access Network (CCSAN) ..... 53 (N)
Communications System 53
Customer (s) 53
Data Transmission (107 Type) Test Line 53
Decibel 54
Decibel Reference Noise C-Message Weighing 54
Decibel Reference Noise C-Message Referenced to 0 54
Detail Billing 54
Echo Control 54
Echo Path Loss 55
Echo Return Loss 55
End Office Switch 55
End User 55
Entry Switch 55
Envelope Delay Distortion 55
Equal Level Echo Path Loss 56
Exchange 56

Certain regulations previously found on this page can now be found on 1st Revised Page 5.

CENTRALIZED EQUAL ACCESS SERVICE

TABLE OF CONTENTS (Cont'd)

Page No.

2.6 Definitions (Cont'd)

Exchange Telephone Company 56
Expected Measured Loss 56
Field Identifier 57
First Come – First Served 57
First Point of Switching 57
Frequency Switch 57
Grandfathered 57
Home 58
Host Office 58
Immediately Available Funds 58
Impedance Balance 58
Impulse Noise 58
Individual Case Basis 58
Inserted Connection Loss 59
Interexchange Carrier (IC) or Interexchange Common Carrier 59
Intermodulation Distortion 59
Interstate Communications 59
Intrastate Communications 59
Line-Side Connection 59
Local Access and Transport Area 60
Local Tandem Switch 60
Loop Around Test Line 60
Loss Deviation 60
Major Fraction Thereof..... 60
Message 61
Milliwatt (102 Type) Test Line 61
Onvoy, Inc. (ONVOY) ..... 61 (Z)
Network Control Signaling 61
Nonsynchronous Test Line 61.1
North American Numbering Plan 61.1
Off-Hook 61.1
On-Hook 62
Open Circuit Test Line 62
Originating Direction 62
Pay Telephone 62
Phase Jitter 62
Point of Interconnection 62
Premises 62
Remote Switching Modules and/or Remote Switching Systems ..... 63 (Z)
(Z)
(Z)

CENTRALIZED EQUAL ACCESS SERVICE

TABLE OF CONTENTS (Cont'd)

Page No.

2.6 Definitions (Cont'd)

Return Loss 63
Registered Equipment 63
Routing Exchange Carrier 63
Service Access Code 63
Service Control Point ..... 63.1 (N)
Service Switching Point ..... 63.1 (N)
Seven Digit Manual Test Line 63.1
Shortage of Facilities or Equipment 64
Short Circuit Test Line 64
Signaling Network Access Connection (SNAC) ..... 64 (N)
Signaling Point of Interconnection (SPOI) ..... 64 |
Signal Point ..... 64 (N)
Signal-To-C-Notched Noise Ratio ..... 64.1 (T)
Signal Transfer Point (STP) ..... 64.1 (N)
Singing Return Loss ..... 64.1 (T)
Subtending End Office of an Access Tandem ..... 64.1 |
Synchronous Test Line ..... 64.1 (T)
Terminating Direction 65
Transmission Measuring (105 Type) Test Line/Responder 65
Transmission Path 65
Trunk 65
Trunk Group 65
Trunk-Side Connection 65
Two-Wire to Four-Wire Conversion 65
V and H Coordinates Method 66
Wire Center 66

3. Reserved For Future Use 67

4. Reserved For Future Use 68

5. Ordering Options for Switched Access Service 69

5.1 General 69

5.1.1 Ordering Conditions 69
5.1.2 Provision Of Other Services 70
5.1.3 Reserved for Future Use 71

CENTRALIZED EQUAL ACCESS SERVICE

TABLE OF CONTENTS (Cont'd)

Page No.

5.2 Access Order 72

5.2.1 Access Order Service Date Intervals 74
5.2.2 Access Order Modifications 76
5.2.3 Cancellation of an Access Order 80
5.2.4 Selection of Facilities for Access Orders 83
5.2.5 Minimum Period 83
5.2.6 Minimum Period Charges 84
5.2.7 Reserved for Future Use 84

5.3 Availability Inventory 85

5.4 Access Orders for Service Provided by Iowa Network and Exchange Telephone Companies 86

6. Switched Access Service 88

6.1 General 88

6.1.1 Feature Group Arrangements and Manner of Provision 88
6.1.2 Reserved for Future Use ..... 92 (C)
6.1.3 Rate Categories 93
6.1.4 Design Layout Report 106
6.1.5 Acceptance Testing 106
6.1.6 Routine Testing 106
6.1.7 Ordering Options and Conditions 107

6.2 Provision and Description of Switched Access Service FeatureGroups . 108

6.2.1 Feature Group A (FGA) 108
6.2.2 Feature Group B (FGB) 108
6.2.3 Reserved for Future Use ..... 112 (C)
6.2.4 Feature Group D (FGD) 115

6.3 Reserved for Future Use 120.1

6.4 Transmission Specifications 121

6.4.1 Standard Transmission Specifications 121
6.4.2 Data Transmission Parameters 125

CENTRALIZED EQUAL ACCESS SERVICE

TABLE OF CONTENTS (Cont'd)

Page No.

6.5 Obligations of Iowa Network 129

6.5.1 Network Management 129
6.5.2 Design and Traffic Routing of Switched Access Service 129
6.5.3 Provision of Service Performance Data 130
6.5.4 Trunk Group Measurement Reports 131
6.5.5 Determination of Number of Transmission Paths 131
6.5.6 Reserved for Future Use 131
6.5.7 Design Blocking Probability 132

6.6 Obligations of the Customer 134

6.6.1 Report Requirements 134
6.6.2 Supervisory Signaling 134
6.6.3 Trunk Group Measurement Reports 135
6.6.4 Design of Switched Access Services 135
6.6.5 Short Duration Mass Calling Requirements ..... 135 (N)
(N)

6.7 Rate Regulations 136

6.7.1 Description and Application of Rates and Charges 136
6.7.2 Minimum Period 137
6.7.3 Reserved for Future Use 137
6.7.4 Reserved for Future Use 137
6.7.5 Change of Feature Group Type 137
6.7.6 Mileage Measurement 137
6.7.7 Measuring Access Minutes 138
6.7.8 Network Blocking Rate for Feature Group D 143
6.7.9 Reserved for Future Use 144
6.7.10 Reserved for Future Use 144
6.7.11 Reserved for Future Use 144
6.7.12 Reserved for Future Use 144
6.7.13 Reserved for Future Use 144

6.8 Rates and Charges 145

6.8.1 Switched Transport 145

7. Reserved for Future Use 146

CENTRALIZED EQUAL ACCESS SERVICE

TABLE OF CONTENTS (Cont'd)

Page No.

8. Customer's Point Of Interconnection Information 147

8.1 General Information 147
8.2 Customer's Point of Interconnection 147

9. Routing Exchange Carriers 148

9.1 Exchange and Localities 148

10. Reserved for Future Use 157

11. Reserved for Future Use 158

12. Reserved for Future Use 159

13. Additional Engineering, Additional Labor
And Miscellaneous Services 160

13.1 Additional Engineering 161

13.1.1 Rates for Additional Engineering 161

13.2 Additional Labor 163

13.2.1 Overtime Installation 163
13.2.2 Overtime Repair 163
13.2.3 Stand by 163
13.2.4 Testing and Maintenance with Exchange
Telephone Companies 163
13.2.5 Other Labor 164
13.2.6 Rates for Additional Labor 164

13.3 Miscellaneous Services 167

13.3.1 Maintenance of Service 167
13.3.2 Reserved for Future Use 168
13.3.3 Reserved for Future Use 168
13.3.4 Testing Services 168
13.3.5 Provision of Access Service Billing Information 173
13.3.6 Reserved for Future Use 174

14. Reserved for Future Use 175

CENTRALIZED EQUAL ACCESS SERVICE

TABLE OF CONTENTS (Cont'd)

Page No.

15. Interface Groups, Transmission Specifications and Channel Interfaces …… 176

15.1 Switched Transport Interface Groups …… 176

15.1.1 Reserved for Future Use …… 176
15.1.2 Reserved for Future Use …… 176
15.1.3 Reserved for Future Use …… 176
15.1.4 Reserved for Future Use …… 176
15.1.5 Reserved for Future Use …… 176
15.1.6 Interface Group 6 …… 176
15.1.7 Reserved for Future Use …… 177
15.1.8 Reserved for Future Use …… 177
15.1.9 Reserved for Future Use …… 177
15.1.10 Reserved for Future Use …… 177
15.1.11 Available Interface Codes …… 177
15.1.12 Supervisory Signaling …… 177

15.2 Transmission Specification Switched Access Service …… 178

15.2.1 Standard Transmission Specifications …… 178
15.2.2 Data Transmission Parameters …… 181

15.3 Reserved for Future Use …… 185

15.4 Reserved for Future Use …… 185

16. Commercial Mobile Radio Service Transport ..... 186 (N)

16.1 General 186

16.2 Definitions 186

16.3 Types of Service 187

16.4 Obligations of CMRS Provider 187

16.5 Obligations of Intermediary Carriers 187

16.6 Usage Charge ..... 188 (N)

CENTRALIZED EQUAL ACCESS SERVICE

CONCURRING CARRIERS

NO CONCURRING CARRIERS

CONNECTING CARRIERS

NO CONNECTING CARRIERS

OTHER PARTICIPATING CARRIERS

ONVOY, INC. (C)

PLYMOUTH, MINNESOTA

REGISTERED SERVICE MARKS	REGISTERED TRADEMARKS
NONE	NONE

CENTRALIZED EQUAL ACCESS SERVICE

EXPLANATION OF SYMBOLS

(C) - To signify changed regulation
(D) - To signify discontinued rate or regulation
(I) - To signify increase
(M) - To signify matter relocated without change
(N) - To signify new rate or regulation
(R) - To signify reduction
(S) - To signify reissued matter
(T) - To signify a change in text but no change in rate or regulation
(Z) - To signify a correction

EXPLANATION OF ABBREVIATIONS

ac	-	Alternating current
ACM	-	Address Complete Message
AML	-	Actual Measured Loss
ANI	-	Automatic Number Identification
AP	-	Program Audio
AT&T-C	-	AT&T Communications
BD	-	Business Day
BHMC	-	Busy Hour Minutes of Capacity
CAROT	-	Centralized Automatic Reporting on Trunks
CCS	-	Common Channel Signaling
CCSA	-	Common Channel Signaling Access
CCSAN	-	Common Channel Signaling Access Network
CEA	-	Centralized Equal Access
CI	-	Changes Interface
CN	-	Charge Number (N)
CO	-	Central Office
COCTX	-	Central Office Centrex
Cont'd	-	Continued
CPE	-	Customer Provided Equipment
Ctx	-	Centrex
DA	-	Directory Assistance
dB	-	decibel
dBrnC	-	Decibel Reference Noise C-Message Weighing
dBrnCO	-	Decibel Reference Noise C-Message Weighted O
dBv	-	Decibel(s) Relative to 1 Volt (reference)
dBvl	-	Decibel(s) Relating to 1 Volt (reference)
dc	-	direct current
EDD	-	Envelope Delay Distortion
ELEPL	-	Equal Level Echo Path Loss
EML	-	Expected Measured Loss
EPL	-	Echo Path Loss

Certain regulations formerly found on this page now appear on 6th Revised Page 13.

CENTRALIZED EQUAL ACCESS SERVICE

EXPLANATION OF ABBREVIATIONS (Cont'd)

ERL	-	Echo Return Loss	
ESS	-	Electronic Switching System	
ESSX	-	Electronic Switching System Exchange	
EXM	-	Exit Message	
F	-	frequency	
FID	-	Field Identifier	
F.C.C.	-	Federal Communications Commission	
FX	-	Foreign Exchange	
HC	-	High Capacity	
Hz	-	Hertz	
IC	-	Interexchange Carrier	
ICB	-	Individual Case Basis	
ICL	-	Inserted Connection Loss	
kbps	-	kilobits per second	
Khz	-	kilohertz	
LATA	-	Local Access and Transport Area	
LIDB	-	Line Information Data Base	
Ma	-	Milliamperes	
Mbps	-	Megabits per second	
MHz	-	Megahertz	
MMUC	-	Minimum Monthly Usage Charge	
MRC	-	Monthly Recurring Charge	
MT	-	Metallic	
MTS	-	Message Telecommunications Service(s)	
NPA	-	Numbering Plan Area	
NRC	-	Nonrecurring Charge	
NTS	-	Non-Traffic Sensitive	
NXX	-	Three-Digit Central Office Code	
OCN		Operating Company Number	(N)
OTPL	-	Zero Transmission Level Point	
PBX	-	Private Branch Exchange	
PCM	-	Pulse Code Modulation	
PLR	-	Private Line Ringdown	
POT	-	Point of Termination	
PSTN	-	Public Switched Telephone Network	
REC	-	Routing Exchange Carrier	
RMS	-	Root-Mean-Square	
RSM	-	Remote Switching Modules	
RSS	-	Remote Switching Systems	
SAC	-	Service Access Code	
SCP	-	Service Control Point	
SNAC	-	Signaling Network Access Connection	
SP	-	Signal Point	

CENTRALIZED EQUAL ACCESS SERVICE

EXPLANATION OF ABBREVIATIONS (Cont'd)

SPOI	-	Signaling Point of Interconnection	(M)
SS7	-	Signaling System 7	
SSP	-	Service Switching Point	
STP	-	Signal Transfer Point	
SRL	-	Signaling Return Loss	(M)
SSN	-	Switched Service Network	
TDM	-	Time Division Multiplexing	
TES	-	Telephone Exchange Service(s)	(N)
TG	-	Telegraph Grade	
TLP	-	Transmission Level Point	
TSPS	-	Traffic Service Position System	
TTP	-	Toll Transfer Point	
TV	-	Television	
USOC	-	Uniform Service Order Code	
VG	-	Voice Grade	
V & H	-	Vertical & Horizontal	
VOIP	-	Voice over Internet Protocol	(N)
WATS	-	Wide Area Telecommunications Service(s)	

Certain regulations currently found on this page previously appeared on 5th Revised Page 13.

CENTRALIZED EQUAL ACCESS SERVICE

REFERENCE TO TECHNICAL PUBLICATIONS

The following technical publications are referenced in this tariff and may be obtained from Bell Communications Research, Inc., Distribution Storage Center, 60 New England Ave., Piscataway, NJ 08854.

Technical Reference:

Multiple Exchange Carrier Access Billing (MECAB) Guidelines
Issued: December, 1991 Available: December, 1991

Multiple Exchange Carrier Ordering and Design (MECOD) Guidelines (C) (X)
Issued: September 10, 1990 Available: September, 1990

PUB 41451 High Capacity Terrestrial Digital Service
Issued: January, 1983 Available: May 17, 1983 (C) (X)

PUB 41004 Data Communications Using Voiceband Private Line Channels
Issued: October, 1973 Available: October, 1973

PUB 62310 Digital Data System Channel Interface Specification
Issued: September, 1983 Available: October, 1983

PUB 62411 High Capacity Digital Service Channel Interface Specification
Issued: September, 1983 Addendum: October, 1984 (C) (X)

TR-NWT-000334, Issue 2 Voice Grade Switched Access Service – Transmission Parameters (C) (X)
Issued: September, 1990 Available: September, 1990

TR-TSY-000335, Issue 2 Voice Grade Special Access - Transmission Parameter Limits and Interface Combinations
Issued: May, 1990 Available: May, 1990 (C) (X)

TR-NPL-000336, Metallic and Telegraph Grade Special Access Services
Issued: October, 1987

TR-NPL-000338, Television Special Access and Local Channel Services
Issued: December, 1986

(x) Issued under authority of Special Permission Number 92-706 of the Federal Communications Commission.

CENTRALIZED EQUAL ACCESS SERVICE

REFERENCE TO TECHNICAL PUBLICATIONS (Cont'd)

Technical Reference: (Cont'd)

TR-NPL-000337 Program Audio Special Access Service and Local Channel Services (C) (X)
Issued: July, 1987 Available: September, 1987 (X) (X)

(D)

TR-NPL-000341 Digital Data Special Access Service – Transmission Parameters and Interface Combinations (C) (X)
Issued: March, 1989 Available: May, 1989

TR-TSH-000342 High Capacity Digital Special Access Service
Issued: February, 1991 Available: February, 1991 (C) (X)

TR-NWT-000394 (N) (X)
Issued: August, 1991 Available: August, 1991

TR-TSV-000905
Issued: July, 1989 Available: July, 1989

TR-TSV-000954
Issued: December, 1990 Available: December, 1990 (N) (X)

The following technical publication is referenced in this tariff and may be obtained from the Bell Communications Technical Education Center, Room B02, 6200 Route 53, Lisle, IL 60532

Telecommunications Transmission Engineering Volume 3 - Networks and Services (Chapters 6 and 7) Second Edition, 1980
Issued: June, 1980 Available: June, 1980

The following technical publication is referenced in this tariff and may be obtained from the National Exchange Carrier Association, Inc., Director - Tariff and Regulatory Matters, 100 South Jefferson Road, Whippany, NJ 07981 and the Federal Communications Commission's commercial contractor.

PUB AS No. 1, Issue II, Access Service
Issued: May, 1984 Available: May, 1984
Addendum: March, 1987 Available: March, 1987

(X) Issued under authority of Special Permission Number 92-706 of the Federal Communications Commission.

CENTRALIZED EQUAL ACCESS SERVICE

1. Application of Tariff

1.1 This tariff contains regulations, rates and charges applicable to the provision of Switched Access Services and other miscellaneous services, hereinafter referred to collectively as service(s), provided by Iowa Network Access Division, hereinafter referred to as Iowa Network, to customers.

1.2 The provision of such services by Iowa Network as set forth in this tariff does not constitute a joint undertaking with the customer or the Routing Exchange Carriers for the furnishing of any service.

Switched access services provided under this tariff cover only the use of Iowa Network's central access tandem, the switched transport between an Iowa Network premises and such central access tandem, and the use of the Iowa Network/ONVOY Common Channel Signaling Access Network. End office switches served by Iowa Network's central access tandem are operated by the appropriate Routing Exchange Carrier. Therefore, any switched access services ordered under this tariff must be used with a like switched access service ordered by a Routing Exchange Carrier or vice versa. (C)

CENTRALIZED EQUAL ACCESS SERVICE

2. General Regulations

2.1 Undertaking of Iowa Network

2.1.1 Scope

(A) Reserved for Future Use

(B) Iowa Network does not undertake to transmit messages under this tariff.

(C) Iowa Network shall be responsible only for the installation, operation and maintenance of the services it provides.

(D) Iowa Network will, for maintenance purposes, test its services only to the extent necessary to detect and/or clear troubles.

(E) Services are provided 24 hours daily, seven days per week except as set forth in other applicable sections of this tariff.

(F) Iowa Network does not warrant that its facilities and services meet standards other than those set forth in this tariff.

2.1.2 Limitations

(A) The customer may not assign or transfer the use of services provided under this tariff; however, where there is no interruption of use or relocation of the services, such assignment or transfer may be made to:

(1) another customer, whether an individual, partnership, association or corporation, provided the assignee or transferee assumes all outstanding indebtedness for such services, and the unexpired portion of the minimum period and the termination liability applicable to such services, if any; or

2. General Regulations (Cont'd)

2.1 Undertaking of Iowa Network (Cont'd)

2.1.2 Limitations (Cont'd)

(A) (Cont'd)

(2) a court-appointed receiver, trustee or other person acting pursuant to law in bankruptcy, receivership, reorganization, insolvency, liquidation or other similar proceedings, provided the assignee or transferee assumes the unexpired portion of the minimum period and the termination liability applicable to such services, if any.

In all cases of assignment or transfer, the written acknowledgment of Iowa Network is required prior to such assignment or transfer which acknowledgment shall be made within fifteen (15) days from the receipt of notification. All regulations and conditions contained in this tariff shall apply to such assignee or transferee.

The assignment or transfer of services does not relieve or discharge the assignor or transferor from remaining jointly or severally liable with the assignee or transferee for any obligations existing at the time of the assignment or transfer.

(B) The use and restoration of services shall be in accordance with Part 64, Subpart D of the Federal Communications Commission's Rules and Regulations, which specifies the priority system for such activities.

CENTRALIZED EQUAL ACCESS SERVICE

2. General Regulations (Cont'd)

2.1 Undertaking of Iowa Network (Cont'd)

2.1.2 Limitations (Cont'd)

(C) Subject to compliance with the rules mentioned in (B) preceding, the services offered herein will be provided to customers on a first-come, first-served basis. First-come, first-served shall be based upon the received time and date stamped by Iowa Network on customer orders which contain the information as required for each respective service as delineated in other sections of this tariff. Customer orders shall not be deemed to have been received until such information is provided. Should questions arise which preclude order issuance due to missing information or the need for clarification, Iowa Network will attempt to seek such missing information or clarification on a verbal basis.

2.1.3 Liability

(A) Iowa Network's liability, if any, for its willful misconduct is not limited by this tariff. With respect to any other claim or suit, by a customer, subscribers to or users of any services provided to or resold by the customer or by any others, for damages associated with the installation, provision, termination, maintenance, repair or restoration of service, and subject to the provisions of (B) through (H) following, Iowa Network's liability, if any, shall not exceed an amount equal to the proportionate charge for the service for the period during which the service was affected. This liability for damages shall be in addition to any amounts that may otherwise be due the customer under this tariff as a Credit Allowance for a Service Interruption. (N) | (N)

CENTRALIZED EQUAL ACCESS SERVICE

2. General Regulations (Cont'd)

2.1 Undertaking of Iowa Network (Cont'd)

2.1.3 Liability (Cont'd)

(B) Iowa Network shall not be liable for any act or omission of any other carrier or customer providing a portion of a service, nor shall Iowa Network for its own act or omission hold liable any other carrier or customer providing a portion of a service.

(C) Iowa Network shall be indemnified defended and held harmless by the customer, against any claim, loss or damage arising from the use of services offered under this tariff including but not limited to claims by subscribers to services provided to the customer, and users of any services provided by or resold by the customer. (N) | | | | (N)

(D) Reserved for Future Use

(E) Iowa Network shall be indemnified, defended and held harmless by the customer against any claim, loss or damage arising from its use of services offered under this tariff, involving:

(1) Claims for libel, slander, invasion of privacy, or infringement of copyright arising from any communications;

(2) Claims for patent infringement arising from combining or using the service furnished by Iowa Network in connection with facilities or equipment furnished by the customer; or

(3) All other claims arising out of any act or omission of the customer in the course of using services provided pursuant to this tariff.

(F) Iowa Network does not guarantee or make any warranty with respect to its services when used in an explosive atmosphere. Iowa Network shall be indemnified, defended and held harmless by the customer from any and all claims by any person relating to the customer's use of services so provided.

CENTRALIZED EQUAL ACCESS SERVICE

2. General Regulations (Cont'd)

2.1 Undertaking of Iowa Network (Cont'd)

2.1.3 Liability (Cont'd)

(G) No license under patents (other than the limited license to use) is granted by Iowa Network or shall be implied or arise by estoppel, with respect to any service offered under this tariff. Iowa Network will defend the customer against claims of patent infringement arising solely from the use by the customer of services offered under this tariff and will indemnify such customer for any damages awarded based solely on such claims.

(H) Iowa Network's failure to provide or maintain services under this tariff shall be excused by labor difficulties, governmental orders, civil commotions, criminal actions taken against Iowa Network, acts of God and other circumstances beyond Iowa Network's reasonable control, subject to the Credit Allowance for a Service Interruption as set forth in 2.4.4 following.

2.1.4 Provision of Services

The services offered under the provisions of this tariff are subject to availability. Iowa Network, to the extent that such services are or can be made available with reasonable effort, will provide to the customer upon reasonable notice services offered in other applicable sections of this tariff at rates and charges specified therein (X)

(X)
|
|
|
|
|
|
|
|
|
(X)

(X) Filed pursuant to Special Permission No. 06-021 in order to reinstate currently effective tariff regulations.

CENTRALIZED EQUAL ACCESS SERVICE

2. General Regulations (Cont'd)

2.1 Undertaking of Iowa Network (Cont'd)

2.1.4 Provision of Services (Cont'd)

(X)
|
|
|
|
|
|
|
|
|
(X)

(X) Filed pursuant to Special Permission No. 06-021 in order to reinstate currently effective tariff regulations.

CENTRALIZED EQUAL ACCESS SERVICE

2. General Regulations (Continu]ed)

2.1 Undertaking of Iowa Network (Cont'd)

2.1.5 Installation and Termination of Services

The Centralized Equal Access Service provided under this tariff (A) includes Iowa Network's communication facilities up to the point of interconnection as defined in 2.6 following which denotes the demarcation point or network interface and (B) will be provided by Iowa Network to such point of interconnection. Any additional terminations at the customer's premises beyond such point of interconnection are the sole responsibility of the customer.

2.1.6 Maintenance of Services

The services provided under this tariff shall be maintained by Iowa Network. The customer or others may not rearrange, move, disconnect, remove or attempt to repair any facilities provided by Iowa Network, other than by connection or disconnection to any interface means used, except with the written consent of Iowa Network.

2.1.7 Changes and Substitutions

Except as provided for equipment and systems subject to F.C.C. Part 68 Regulations at 47 C.F.R. Section 68.110(b), Iowa Network may, where such action is reasonably required in the operation of its business, (A) substitute, change or rearrange any facilities used in providing service under this tariff, (B) change minimum protection criteria, (C) change operating or maintenance characteristics of facilities or (D) change operations or procedures of Iowa Network. In case of any such substitution, change or rearrangement, the transmission parameters will be within the range as set forth in Section 15 following.

2. General Regulations (Cont'd)

2.1 Undertaking of Iowa Network (Cont'd)

Iowa Network shall not be responsible if any such substitution, change or rearrangement renders any customer furnished services obsolete or requires modification or alteration thereof or otherwise affects their use or performance. If such substitution, change or rearrangement materially affects the operating characteristics of the facility, Iowa Network will provide reasonable notification to the customer in writing. Reasonable time will be allowed for any redesign and implementation required by the change in operating characteristics. Iowa Network will work cooperatively with the customer to determine reasonable notification procedures.

2.1.8 Refusal and Discontinuance of Service

(A) Unless the provisions of 2.2.2(B) or 2.5 following apply, if the customer fails to comply with 2.1.6 preceding or 2.2.3, 2.3.1, 2.3.6, 2.3.7 or 2.4 following, including any payments to be made by it on the dates and times herein specified, Iowa Network may, on thirty (30) days written notice by Certified U.S. Mail to the person designated by the customer to receive such notices of noncompliance, refuse additional applications for service and/or refuse to complete any pending orders for service at any time thereafter. If Iowa Network does not refuse additional applications for service on the date specified in the thirty (30) days notice, and the customer's noncompliance continues, nothing contained herein shall preclude Iowa Network's right to refuse additional applications for service without further notice to the noncomplying customer.

CENTRALIZED EQUAL ACCESS SERVICE

2. General Regulations (Cont'd)

2.1 Undertaking of Iowa Network (Cont'd)

2.1.8 Refusal and Discontinuance of Service (Cont'd)

(B) Unless the provisions of 2.2.2(B) or 2.5 following apply, if the customer fails to comply with 2.1.6 preceding or 2.2.3, 2.3.1, 2.3.6, 2.3.7 or 2.4 following, including any payments to be made by it on the dates and times herein specified, Iowa Network may, on thirty (30) days written notice by Certified U.S. Mail to the person designated by the customer to receive such notices of noncompliance, discontinue the provision of the services involved at any time thereafter. In the case of such discontinuance, all applicable charges, including termination charges, shall become due. If Iowa Network does not discontinue the provision of the services involved on the date specified in the thirty (30) days notice, and the customer's noncompliance continues, nothing contained herein shall preclude Iowa Network's right to discontinue the provision of the services involved without further notice to the noncomplying customer.

2.1.9 Reserved for Future Use

2.1.10 Notification of Service-Affecting Activities

Iowa Network will provide the customer timely notification of service-affecting activities that may occur during the normal operation of its business. Such activities may include, but are not limited to, equipment or facilities additions, removals or rearrangements, routine preventative maintenance and major switching machine change-out. Generally, such activities are not individual customer service specific; they affect many customer services. No specific advance notification period is applicable to all service activities.

CENTRALIZED EQUAL ACCESS SERVICE

2. General Regulations (Cont'd)

2.1 Undertaking of Iowa Network (Cont'd)

2.1.10 Notification of Service-Affecting Activities (Cont'd)

Iowa Network will work cooperatively with the customer to determine the reasonable notification requirements. With some emergency or unplanned service-affecting conditions, such as an outage resulting from cable damage, notification to the customer may not be possible.

2.1.11 Coordination with Respect to Network Contingencies

Iowa Network intends to work cooperatively with the customer to develop network contingency plans in order to maintain maximum network capability following natural or man-made disasters which affect telecommunications services, subject to the Restoration Priority requirements of Part 64 of the F.C.C.'s Rules.

2.1.12 Provision and Ownership of Telephone Numbers

Iowa Network reserves the reasonable right to assign, designate or change telephone numbers, any other call number designations associated with Centralized Equal Access Service, or the Exchange Telephone Company serving central office prefixes associated with such numbers, when necessary in the conduct of its business. Should it become necessary to make a change in such number(s), Iowa Network will furnish to the customer six- (6) months notice, by Certified U.S. Mail, of the effective date and an explanation of the reason(s) for such change(s). In the case of emergency conditions, however, e.g., a fire in a wire center, it may be necessary to change a telephone number without six- (6) months notice in order to provide service to the customer.

CENTRALIZED EQUAL ACCESS SERVICE

2. General Regulations (Cont'd)

2.2 Use

2.2.1 Reserved for Future Use

2.2.2 Interference or Impairment

(A) The characteristics and methods of operation of any circuits, facilities or equipment provided by other than Iowa Network and associated with the facilities utilized to provide services under this tariff shall not interfere with or impair service over any facilities of Iowa Network, its affiliated companies, or the Routing Exchange Carriers involved in its services, cause damage to their plant, impair the privacy of any communications carried over their facilities or create hazards to the employees of any of them or the public.

(B) Except as provided for equipment or systems subject to the F.C.C. Part 68 Rules in 47 C.F.R. Section 68.108, if such characteristics or methods of operation are not in accordance with (A) preceding, Iowa Network will, where practicable, notify the customer that temporary discontinuance of the use of a service may be required; however, where prior notice is not practicable, nothing contained herein shall be deemed to preclude Iowa Network's right to temporarily discontinue forthwith the use of a service if such action is reasonable under the circumstances. In case of such temporary discontinuance, the customer will be promptly notified and afforded the opportunity to correct the condition, which gave rise to the temporary discontinuance. During such period of temporary discontinuance, credit allowance for service interruptions as set forth in 2.4.4 following is not applicable.

CENTRALIZED EQUAL ACCESS SERVICE

2. General Regulations (Cont'd)

2.2 Use (Cont'd)

2.2.3 Unlawful Use

The service provided under this tariff shall not be used for an unlawful purpose.

CENTRALIZED EQUAL ACCESS SERVICE

2. General Regulations (Cont'd)

2.3 Obligations of the Customer

2.3.1 Damages

The customer shall reimburse Iowa Network for damages to Iowa Network facilities utilized to provide services under this tariff caused by the negligence or willful act of the customer or resulting from improper use of Iowa Network facilities, or due to malfunction of any facilities or equipment provided for or by the customer. Iowa Network will, upon reimbursement for damages, cooperate with the customer in prosecuting a claim against the person causing such damage and the customer shall be subrogated to the right of recovery by Iowa Network for the damages to the extent of such payment. Nothing in the foregoing provision shall be interpreted to hold one customer liable for another customer's actions.

2.3.2 Ownership of Facilities and Theft

Facilities utilized by Iowa Network to provide service under the provisions of this tariff shall remain the property of Iowa Network. Such facilities shall be returned to Iowa Network by the customer in as good a condition as reasonable wear will permit. (C) (X)

2.3.3 Reserved for Future Use

2.3.4 Reserved for Future Use

2.3.5 Reserved for Future Use

(X) Issued under authority of Special Permission Number 89-150 of the Federal Communications Commission.

CENTRALIZED EQUAL ACCESS SERVICE

2. General Regulations (Cont'd)

2.3 Obligations of the Customer (Cont'd)

2.3.6 Availability for Testing

The services provided under this tariff shall be available to Iowa Network at times mutually agreed upon in order to permit Iowa Network to make tests and adjustments appropriate for maintaining the services in satisfactory operating condition. Such tests and adjustments shall be completed within a reasonable time. No credit will be allowed for any interruptions involved during such tests and adjustments. (C) (X)

2.3.7 Balance

All signals for transmission over the services provided under this tariff shall be delivered by the customer balanced to ground except for ground start, duplex (DX) and McCulloh-Loop (Alarm System) type signaling and dc telegraph transmission at speeds of 75 baud or less.

2.3.8 Design of Customer Services

Subject to the provisions of 2.1.7 preceding, the customer shall be solely responsible, at its own expense, for the overall design of its services and for any redesigning or rearrangement of its services which may be required because of changes in facilities, operations or procedures of Iowa Network, minimum protection criteria or operating or maintenance characteristics of the facilities.

2.3.9 References to Iowa Network

The customer may advise End Users that certain services are provided by Iowa Network in connection with the service the customer furnishes to End Users; however, the customer shall not represent that Iowa Network jointly participates in the customer's services.

(X) Issued under authority of Special Permission Number 89-150 of the Federal Communications Commission.

2. General Regulations (Cont'd)

2.3 Obligations of the Customer (Cont'd)

2.3.10 Reserved for Future Use

2.3.11 Claims and Demands for Damages

(A) With respect to claims of patent infringement made by third persons, the customer shall defend, indemnify, protect and save harmless Iowa Network from and against all claims arising out of the combining with, or use in connection with, the services provided under this tariff, any circuit, apparatus, system or method provided by the customer.

(B) The customer shall defend, indemnify and save harmless Iowa Network from and against suits, claims, losses or damages including punitive damages, attorneys' fees and court costs by third persons arising out of the construction, installation, operation, maintenance, or removal of the customer's circuits, facilities, or equipment connected to Iowa Network's services provided under this tariff, including, without limitation, Workmen's Compensation claims, actions for infringement of copyright and/or unauthorized use of program material, libel and slander actions based on the content of communications transmitted over the customer's circuits, facilities or equipment, and proceedings to recover taxes, fines, or penalties for failure of the customer to obtain or maintain in effect any necessary certificates, permits, licenses, or other authority to acquire or operate the services provided under this tariff; provided, however, the foregoing indemnification shall not apply to suits, claims, and demands to recover damages for damage to property, death, or personal injury unless such suits, claims or demands are based on the tortious conduct of the customer, its officers, agents or employees. (C) (C) (C)

2. General Regulations (Cont'd)

2.3 Obligations of the Customer (Cont'd)

2.3.11 Claims and Demands for Damages (Cont'd)

(C) Reserved for Future Use

(D) The customer shall defend, indemnify and save harmless Iowa Network from and against any suits, claims, losses or damages, including punitive damages, attorneys' fees and court costs by the customer or third parties arising out of any act or omission of the customer in the course of using services provided under this tariff.

2.3.12 Reserved for Future Use

2.3.13 Coordination with Respect to Network Contingencies

The customer shall, in cooperation with Iowa Network, coordinate in planning the actions to be taken to maintain maximum network capability following natural or man-made disasters, which affect telecommunications services.

2.3.14 Jurisdictional Report Requirements

(A) Jurisdictional Reports

(1)(a) When a customer orders Feature Group B Switched Access Service, the customer shall state in its order the projected interstate percentage for interstate usage for each Feature Group B Switched Access Service group ordered. If the customer discontinues some but not all of the Feature Group B Switched Access Services in a group, it shall provide the projected interstate percentage for such services, which are discontinued.

2. General Regulations (Cont'd)

2.3 Obligations of the Customer (Cont'd)

2.3.14 Jurisdictional Report Requirements (Cont'd)

(A) Jurisdictional Reports (Cont'd)

(b) Pursuant to Federal Communications Commission Order FCC 85-145 adopted April 16, 1985, Feature Group B interstate usage is to be developed as though every call that enters a customer network at a point within the same state as that in which the called station (as designated by the called station telephone number) is situated is an intrastate communication and every call for which the point of entry is in a state other than that where the called station (as designated by the called station telephone number) is situated is an interstate communication.

(c) The projected interstate percentages will be used by Iowa Network to apportion the usage between interstate and intrastate until a revised report is received as set forth in (7) following.

(2) All single Feature Group B Switched Access Service usage and charges will be apportioned by Iowa Network between interstate and intrastate. The projected interstate percentage reported as set forth in 1(a) and 1(b) preceding will be used to make such apportionment.

CENTRALIZED EQUAL ACCESS SERVICE

2. General Regulations (Cont'd)

2.3 Obligations of the Customer (Cont'd)

2.3.14 Jurisdictional Report Requirements (Cont'd)

(A) Jurisdictional Reports (Cont'd)

(3) For trunk group arrangements where either the interstate or the intrastate charges are based on measured usage, the interstate Feature Group B Switched Access Service(s) information reported as set forth in (1) preceding will be used to determine the charges as follows:

For all groups the number of access minutes for a group will be multiplied by the projected interstate percentage to develop the interstate access minutes. The number of access minutes for the group minus the developed interstate access minutes for the group will be the developed intrastate access minutes.

(4) When a customer orders Feature Group D Switched Access Service, Iowa Network, where the jurisdiction can be determined from the call detail, will, unless the customer provides the projected interstate percentage for interstate usage for each end office group in its order, determine the projected interstate percentage as follows:

For originating access minutes, the projected interstate percentage will be developed on a monthly basis by end office when the Feature Group D Switched Access Service access minutes are measured by dividing the measured interstate originating access minutes (the access minutes where the calling

CENTRALIZED EQUAL ACCESS SERVICE

2. General Regulations (Cont'd)

2.3 Obligations of the Customer (Cont'd)

2.3.14 Jurisdictional Report Requirements (Cont'd)

(A) Jurisdictional Reports (Cont'd)

(4) (Cont'd)

number is in one state and the called number is in another state) by the total originating access minutes when the call detail is adequate to determine the appropriate jurisdiction. For terminating access minutes, the data used by Iowa Network to develop the projected interstate percentage for originating access minutes will be used to develop projected interstate percentage for such terminating access minutes. When originating call details are insufficient to determine the jurisdiction for the call, the customer shall supply the projected interstate percentage or authorize Iowa Network to use the Iowa Network developed percentage. This percentage shall be used by Iowa Network as the interstate percentage for such call detail. Iowa Network will designate the number obtained by subtracting the projected interstate percentage for originating and terminating access minutes calculated by Iowa Network from 100 (100 - calculated projected interstate percentage = intrastate percentage) as the projected intrastate percentage of use.

(5) Reserved for Future Use

CENTRALIZED EQUAL ACCESS SERVICE

2. General Regulations (Cont'd)

2.3 Obligations of the Customer (Cont'd)

2.3.14 Jurisdictional Report Requirements (Cont'd)

(A) Jurisdictional Reports (Cont'd)

(6) Except where Iowa Network measured access minutes are used as set forth in (4) preceding, the customer reported interstate percentage of use, as set forth in (1) or (4) preceding, will be used until the customer reports a different projected interstate percentage for an in-service end office group. When the customer adds BHMC, lines or trunks to an existing end office group, the customer shall furnish a projected interstate percentage that applies to the added BHMC, lines or trunks. When a customer discontinues BHMC, lines or trunks from an existing group, the customer shall furnish a projected interstate percentage for the discontinued BHMC, lines or trunks in the end office group. The revised report will serve as the basis for future billing and will be effective on the next bill date. No prorating or back billing will be done based on the report.

(7) Effective on the first of January, April, July, and October of each year, the customer shall update the intrastate and interstate jurisdictional report. The customer shall forward to Iowa Network, to be received no later than fifteen (15) calendar days after the first of each such month, a revised report showing the interstate and intrastate percentage of use for the past three (3) months ending the last day of December, March, June and September,

CENTRALIZED EQUAL ACCESS SERVICE

2. General Regulations (Cont'd)

2.3 Obligations of the Customer (Cont'd)

2.3.14 Jurisdictional Report Requirements (Cont'd)

(A) Jurisdictional Reports (Cont'd)

(7) (Cont'd)

respectively, for each service arranged for interstate use. Except as set forth in (4) preceding, where jurisdiction can be determined from the call detail, the revised report will serve as the basis for the next three (3) months billing and will be effective on the bill date in the following month (i.e., February, May, August and November) for that service. No prorating or backbilling will be done based on the report. If the customer does not supply the report, Iowa Network will assume the percentages to be the same as that provided in the last quarterly report. For those cases in which a quarterly report has never been received from the customer, Iowa Network will assume the percentages to be the same as that provided in the order for service as set forth in (1) preceding.

(B) The customer shall keep sufficient detail from which the percentage of interstate use can be ascertained and upon request of Iowa Network make the records available for inspection. Such a request will be initiated by Iowa Network no more than once per year. The customer shall supply the data within thirty (30) calendar days of Iowa Network's request.

CENTRALIZED EQUAL ACCESS SERVICE

2. General Regulations (Cont'd)

2.3 Obligations of the Customer (Cont'd)

2.3.15 Determination of Interstate Charges for Mixed Interstate and Intrastate Access Service

When mixed interstate and intrastate Access Service is provided, all charges will be prorated between interstate and intrastate. The percentages provided in the reports, as set forth in 2.3.14(A) preceding, will serve as the basis for calculating the charges. The percentages of an Access Service to be charged as interstate are applied in the following manner:

(A) Monthly and Nonrecurring Charges (C)

For monthly and nonrecurring chargeable rate elements, multiply the percent interstate use times the quantity of chargeable elements times the stated tariff rate. (C)

(B) Usage-Sensitive Charges

For usage sensitive (i.e., access minutes and calls) chargeable rate elements, rates are calculated as follows:

(1) multiply the percent interstate use times actual use (i.e., measured) times the stated tariff rate.

The interstate percentage will change as revised usage reports are submitted or a revised percentage is calculated as set forth in 2.3.14 preceding.

2.3.16 Reserved for Future Use

2. General Regulations (Cont'd)

2.4 Payment Arrangements and Credit Allowances

2.4.1 Payment of Rates, Charges and Deposits

(A) Iowa Network will, in order to safeguard its interests, only require a customer which has a proven history of late payments to Iowa Network, or does not have established credit, except for a customer which is a successor of a company which has established credit and has no history of late payments to Iowa Network, to make a deposit prior to or at any time after the provision of a service to the customer to be held by Iowa Network as a guarantee of the payment of rates and charges. Such deposit may not exceed the actual or estimated rates and charges for the service for a two-month period. The fact that a deposit has been made in no way relieves the customer from complying with Iowa Network's regulations as to the prompt payment of bills. At such time as the provision of the service to the customer is terminated, the amount of the deposit will be credited to the customer's account and any credit balance, which may remain, will be refunded. At the option of Iowa Network, such a deposit may be refunded or credited to the customer's account when the customer has established credit or after the customer has established a one-year prompt payment record at any time prior to the termination of the provision of the service to the customer. In the case of a cash deposit, for the period the deposit is held by Iowa Network, the customer will receive interest at five percent (5%) calculated (C)
from the date that the customer makes the deposit (C)

2. General Regulations (Cont'd)

2.4 Payment Arrangements and Credit Allowances (Cont'd)

2.4.1 Payment of Rates, Charges and Deposits (Cont'd)

(B) Iowa Network shall bill on a current basis all rates and charges incurred by and credits due to the customer under this tariff attributable to services established or discontinued during the preceding billing period. In addition, Iowa Network shall bill in advance, charges for all services to be provided during the ensuing billing period except for charges associated with service usage which will be billed in arrears. The bill day (i.e., the billing date of a bill for a customer for Access Service under this tariff), the period of service each bill covers and the payment date will be as follows:

(1) Iowa Network will establish a bill day monthly for each customer account. The bill will cover non-usage sensitive service charges for the ensuing billing period for which the bill is rendered, any known unbilled non-usage sensitive charges for prior periods and unbilled usage charges for the period after the last bill day through the current bill day. Any known unbilled usage charges for prior periods and any known unbilled adjustments will be applied to this bill. Payment for such bills is due as set forth in (C)

CENTRALIZED EQUAL ACCESS SERVICE

2. General Regulations (Cont'd)

2.4 Payment Arrangements and Credit Allowances (Cont'd)

2.4.1 Payment of Rates, Charges and Deposits (Cont'd)

(B) (Cont'd)

(1) (Cont'd)

(2) following. If payment is not received by the payment date, as set forth in (2) following, in immediately available funds, a late payment penalty will apply as set forth in (2) following.

(2)(a)

All bills dated, as set forth in (1) preceding, for service provided to the customer by Iowa Network, are due thirty (30) days (payment date) after the bill day or by the next bill date (i.e., same date in the following month as the bill date) whichever is the shortest interval, except as provided herein, and are payable in immediately available funds. If the customer does not receive a bill at least twenty (20) days prior to the thirty (30) day payment due date, then the bill shall be considered delayed, upon request of the customer the due date will be extended by the number of days the bill was delayed. Such a request of the customer must be accompanied with proof of late bill receipt. (Z)
(Z)

CENTRALIZED EQUAL ACCESS SERVICE

2. General Regulations (Cont'd)

2.4 Payment Arrangements and Credit Allowances (Cont'd)

2.4.1 Payment of Rates, Charges and Deposits (Cont'd)

(B) (Cont'd)

(2)(a) (Cont'd)

(M) (X)

If such payment date would cause payment to be due on a Saturday, Sunday or Holiday (i.e., New Year's Day, Independence Day, Labor Day, Thanksgiving Day, Christmas Day, the second Tuesday in November and a day when Washington's Birthday, Memorial Day or Columbus Day is legally observed) payment for such bills will be due from the customer as follows:

If such payment date falls on a Sunday or on a Holiday which is observed on a Monday, the payment date shall be the first non-Holiday day following such Sunday or Holiday. If such payment date falls on a Saturday or on a Holiday which is observed on Tuesday, Wednesday, Thursday or Friday, the payment date shall be the last non-Holiday day preceding such Saturday or Holiday.

(M) (X)

(X) Issued under authority of Special Permission Number 89-150 of the Federal Communications Commission.

Certain regulations found on this page formerly appeared on Original Page 40.

CENTRALIZED EQUAL ACCESS SERVICE

2. General Regulations (Cont'd)

2.4 Payment Arrangements and Credit Allowances (Cont'd)

2.4.1 Payment of Rates, Charges and Deposits (Cont'd)

(B) (Cont'd)

(2)(b) Further, if any portion of the payment is received by Iowa Network after the payment date as set forth in (a) preceding, or if any portion of the payment is received by Iowa Network in funds which are not immediately available to Iowa Network, then a late payment penalty shall be due to Iowa Network. The late payment penalty shall be the portion of the payment not received by the payment date times a late factor. The late factor shall be the lesser of:

(I) the highest interest rate (in decimal value) which may be levied by law for commercial transactions, compounded daily for the number of days from the payment date to and including the date that the customer actually makes the payment to Iowa Network, or

(II) 0.000590 per day, compounded daily for the number of days from the payment date to and including the date that the customer actually makes the payment to Iowa Network.

CENTRALIZED EQUAL ACCESS SERVICE

2. General Regulations (Cont'd)

2.4 Payment Arrangements and Credit Allowances (Cont'd)

2.4.1 Payment of Rates, Charges and Deposits (Cont'd)

(B) (Cont'd)

(2)(c) In the event that a billing dispute concerning any rates or charges billed to the customer by Iowa Network is resolved in favor of Iowa Network, any payments withheld pending settlement of the dispute shall be subject to the late payment penalty set forth in (b) preceding. If the customer disputes the bill on or before the payment date, and pays the undisputed amount on or before the payment date, any late payment charge for the disputed amount will not start until ten (10) days after the payment date.

(3) Billing Disputes Resolved in Favor of the Customer

If the customer pays the total billed amount and disputes all or part of the amount, Iowa Network will refund any overpayment. In addition, Iowa Network will pay to the customer penalty interest on the overpayment. When a claim is filed within 90 days of the due date, the penalty interest period shall begin on the payment date. When a claim is filed more than 90 days after the due date, the penalty interest period shall begin from the date of the claim or the date of overpayment, whichever is later. (C) (X)

(X) Issued under authority of Special Permission Number 89-150 of the Federal Communications Commission.

CENTRALIZED EQUAL ACCESS SERVICE

2. General Regulations (Cont'd)

2.4 Payment Arrangements and Credit Allowances (Cont'd)

2.4.1 Payment of Rates, Charges and Deposits (Cont'd)

(B) (Cont'd)

(3) Billing Disputes Resolved in Favor of the Customer (Continued)

(Z)

(Z)

The penalty interest period shall end on the date that Iowa Network actually refunds the overpayment to the customer. The penalty interest rate shall be at the same rate of interest for the interest expense billed to the account and paid by the customer.

(C)

(C)

(C) Reserved for Future Use

CENTRALIZED EQUAL ACCESS SERVICE

2. General Regulations (Cont'd)

2.4 Payment Arrangements and Credit Allowances (Cont'd)

2.4.1 Payment of Rates, Charges and Deposits (Cont'd)

(D) Adjustments for the quantities of services established or discontinued in any billing period beyond the minimum period set forth for services in other sections of this tariff will be prorated to the number of days or major fraction of days based on a thirty (30)-day month. (M) (X)

(E) Iowa Network will, upon request, furnish within thirty (30) days of a request at no charge to the customer such detailed information as may reasonably be required for verification of any bill. (C) (X)

(X) Issued under authority of Special Permission Number 89-150 of the Federal Communications Commission.

Certain regulations previously found on this page formerly appeared on Original Page 43.

2. General Regulations (Cont'd)

2.4 Payment Arrangements and Credit Allowances (Cont'd)

2.4.1 Payment of Rates, Charges and Deposits (Cont'd)

(F) When a rate or charge as set forth in this tariff is shown to more than two decimal places, the charges will be determined using the rate shown. The resulting amount will then be rounded to the nearest penny (i.e., rounded to two decimal places).

(G) When more than one copy of a customer bill for services provided under the provisions of this tariff is furnished to the customer, an additional charge applies for each additional copy of the bill as set forth in 13.3.5 following.

2.4.2 Minimum Periods

The minimum periods for which services are provided and for which rates and charges are applicable is one (1) month, except as otherwise specified.

2.4.3 Cancellation of an Order for Service

Provisions for the cancellation of an order for service are set forth in 5.2.2(B) and 5.2.3 following.

2.4.4 Credit Allowance for Service Interruptions

(A) General

A service is interrupted when it becomes unusable to the customer because of a failure of a facility component used to furnish service under this tariff or in the event that the protective controls applied by Iowa Network result in the complete loss of service by the customer as set forth in 6.5.1 following. An interruption period starts when an inoperative service is

CENTRALIZED EQUAL ACCESS SERVICE

2. General Regulations (Cont'd)

2.4 Payment Arrangements and Credit Allowances (Cont'd)

2.4.4 Credit Allowance for Service Interruptions (Cont'd)

(A) General (Cont'd)

reported to Iowa Network, or when Iowa Network becomes (C) (X)
aware of the service interruption, and ends when the service is (C) (X)
operative.

(B) When A Credit Allowance Applies

In case of an interruption to any service, allowance for the period of interruption, if not due to the negligence of the customer, shall be as follows:

(1) For Switched Access Service, no credit shall be allowed for an interruption of less than twenty-four (24) hours. The customer shall be credited for an interruption of twenty-four (24) hours or more at the rate of 1/30 of any applicable monthly rates for each period of twenty-four (24) hours or major fraction thereof that the interruption continues.

(2) The credit allowance(s) for an interruption or for a series of interruptions shall not exceed any monthly rate for the service interrupted in any one monthly billing period.

(3) Reserved for Future Use

(X) Issued under authority of Special Permission Number 89-150 of the Federal Communications Commission.

CENTRALIZED EQUAL ACCESS SERVICE

2. General Regulations (Cont'd)

2.4 Payment Arrangements and Credit Allowances (Cont'd)

2.4.4 Credit Allowance for Service Interruptions (Cont'd)

(C) When a Credit Allowance Does Not Apply

No credit allowance will be made for:

(1) Interruptions caused by the negligence of the customer.

(2) Interruptions of a service due to the failure of equipment or systems provided by the customer or others.

(3) Interruptions of a service during any period in which Iowa Network is not afforded access to the location where the service is terminated.

(4) Interruptions of a service for maintenance purposes, to make rearrangements, or for the implementation of an order for a change in the service during the time that was negotiated with the customer. Thereafter, a credit allowance as set forth in (B) preceding applies.

(5) Reserved for Future Use

(6) Periods when the customer continues to use the service on an impaired basis.

(7) Periods of temporary discontinuance as set forth in 2.2.2(B) preceding.

(8) An interruption or a group of interruptions, resulting from a common cause, for amounts less than one dollar ($1.00).

(X) Certain regulations previously found on this page can now be found on Original Page 46.1.

CENTRALIZED EQUAL ACCESS SERVICE

2. General Regulations (Cont'd)

2.4 Payment Arrangements and Credit Allowances (Cont'd)

2.4.4 Credit Allowance for Service Interruptions (Cont'd)

(C) When a Credit Allowance Does Not Apply (Cont'd)

(9) Periods of interruption as set forth in 13.3.1 following.

(10) Interruption of service caused by a customer's failure to provide notification to Iowa Network of media stimulated mass calling events as set forth in 6.6.5 following. (N) | | (N)

(D) Reserved for Future Use (M)

Certain regulations found on this page formerly appeared on Original page 46.

CENTRALIZED EQUAL ACCESS SERVICE

2. General Regulations (Cont'd)

2.4 Payment Arrangements and Credit Allowances (Cont'd)

2.4.4 Credit Allowance for Service Interruptions (Cont'd)

(E) Temporary Surrender of a Service

In certain instances, the customer may be requested by Iowa Network to surrender a service for purposes other than maintenance, testing or activity relating to a service order. If the customer consents, a credit allowance will be granted. The credit allowance will be 1/1440 of the monthly rate for each period of thirty (30) minutes or fraction thereof that the service is surrendered. In no case will the credit allowance exceed the monthly rate for the service surrendered in any one (1) monthly billing period.

2.4.5 Reserved for Future Use

2.4.6 Reserved for Future Use

2.4.7 Title or Ownership Rights

(A) The payment of rates and charges by customers for the services offered under the provisions of this tariff does not assign, confer or transfer title or ownership rights to proposals or facilities developed or utilized, respectively, by Iowa Network in the provision of such services.

2.4.8 Rating and Billing of Access Services Provided by Iowa Network and Routing Exchange Carriers

Iowa Network will handle rating and billing of Access Services under this tariff as follows.

CENTRALIZED EQUAL ACCESS SERVICE

2. General Regulations (Cont'd)

2.4 Payment Arrangements and Credit Allowances (Cont'd)

2.4.8 Rating and Billing of Access Services Provided by Iowa Network and Exchange Telephone Companies (Cont'd)

(A) Iowa Network will provide the Switched Transport between Iowa Network's central access tandem and another Iowa Network premises set forth in Section 8 following and bill the charges in accordance with its Centralized Equal Access Tariff. Iowa Network's rate for the Switched Transport element is as set forth in 6.8.1 following. The Routing Exchange Carrier will provide the Switched Transport element between an Iowa Network premises listed in Section 8 following and the end office switch(s) served by Iowa Network's central access tandem and will bill the charges in accordance with its Access Service tariff. When applicable, the Routing Exchange Carrier will also provide the Switched Transport element between the customer's premises and Iowa Network premises listed in Section 8 following. All other appropriate charges in the Routing Exchange Carrier tariff are applicable.

CENTRALIZED EQUAL ACCESS SERVICE

2. General Regulations (Cont'd)

2.5 Connections

2.5.1 General

Equipment and systems (i.e., terminal equipment, multiline terminating systems and communications systems) may be connected with Switched Access Service furnished by Iowa Network where such connection is made in accordance with the provisions specified in Technical Reference Publication AS No. 1 and in 2.1 preceding. (X)

2.5.2 Reserved for Future Use

(X) Issued under authority of Special Permission Number 88-252 of the Federal Communications Commission.

CENTRALIZED EQUAL ACCESS SERVICE

2. General Regulations (Cont'd)

2.6 Definitions

Certain terms used herein are defined as follows:

Access Code

The term "Access Code" denotes a uniform five (5) or seven (7) digit code assigned by the Routing Exchange Carrier to an individual customer. The five (5) digit code has the form 10XXX, and the seven (7) digit code has the form 950-0XXX or 950-1XXX.

Access Minutes

The term "Access Minutes" denotes that usage of exchange facilities in interstate service for the purpose of calculating chargeable usage.

(C) (X)
| |
| |
| |
| |
| |
| |
(C) (X)

Access Tandem

The term "Access Tandem" denotes a switching system that provides a concentration and distribution function for originating and terminating traffic between end offices and a customer's premises.

Answer/Disconnect Supervision

The term "Answer/Disconnect Supervision" denotes the transmission of the switch trunk equipment supervisory signal (off-hook or on-hook) to the customer's point of interconnection as an indication that the called party has answered or disconnected.

(X) Issued under authority of Special Permission Number 89-150 of the Federal Communications Commission.

CENTRALIZED EQUAL ACCESS SERVICE

2. General Regulations (Cont'd)

2.6 Definitions (Cont'd)

Attenuation Distortion

The term "Attenuation Distortion" denotes the difference in loss at specified frequencies relative to the loss at 1004 Hz, unless otherwise specified.

Automatic Number Identification (ANI) (N)

The term "Automatic Number Identification" denotes the Multi-Frequency (MF) signaling parameter that identifies the billing number of the calling party. (N)

Balance (100 Type) Test Line

The term "Balance (100 Type) Test Line" denotes an arrangement which provides for balance and noise testing.

Bit

The term "Bit" denotes the smallest unit of information in the binary system of notation.

Business Day

The term "Business Day" denotes the time of day that Iowa Network is open for business. Business day hours are from 9:00 to 5:00 with an hour for lunch, Monday through Friday, resulting in a standard forty (40) hour workweek.

Busy Hour Minutes of Capacity (BHMC)

The term "Busy Hour Minutes of Capacity (BHMC)" denotes the customer specified maximum amount of Switched Access Service access minutes the customer expects to be handled in an end office switch during any hour in an 8:00 A.M. to 11:00 P.M. period for the Feature Group ordered.

2. General Regulations (Cont'd)

2.6 Definitions (Cont'd)

Call

The term "Call" denotes a customer attempt for which the complete address code (e.g., 0-, 911, or 7 digits) is provided to the serving dial tone office.

Calling Party Number (CPN) (N)

The term "Calling Party Number" denotes the SS7 signaling parameter that identifies the subscriber line number or directory number of the calling party. (N)

Carrier Identification Code (CIC) (N)

The term "Carrier Identification Code (CIC)" denotes a numeric code assigned by the North American Numbering Plan (NANP) Administrator for the provisioning of Feature Group B or Feature Group D Switched Access Services. The numeric code is unique to each carrier and is used by the Telephone Company to route switched access traffic to the Customer Designated Premises. (N)

CCS

The term "CCS" denotes a hundred call seconds, which is a standard unit of traffic load that is equal to one hundred (100) seconds of usage or capacity of a group of servers (e.g., trunks).

Central Office

See End Office Switch

Central Office Prefix

The term "Central Office Prefix" denotes the first three (3) digits (NXX) of the seven (7) digit telephone number assigned to a customer's Telephone Exchange Service when dialed on a local basis.

Channel(s)

The term "Channel(s)" denotes an electrical or photonic, in the case of fiber optic-based transmission systems, communications path between two (2) or more points of termination.

Certain regulations formerly found on this page now appear on 2nd Revised Page 53.

CENTRALIZED EQUAL ACCESS SERVICE

2. General Regulations (Cont'd)

2.6 Definitions (Cont'd)

Channelize (M)

The term "Channelize" denotes the process of multiplexing-demultiplexing wider bandwidth or higher speed channels into narrower bandwidth or lower speed channels. (M)

Charge Number (CN) (N)

The term "Charge Number" denotes the SS7 signaling parameter that identifies the billing telephone number of the calling party. (N)

C-Message Noise

The term "C-Message Noise" denotes the frequency weighted average noise within an idle voice channel. The frequency weighing, called C-message, is used to simulate the frequency characteristic of the 500-type telephone set and the hearing of the average subscriber.

C-Notched Noise

The term "C-Notched Noise" denotes the C-message frequency weighted noise on a voice channel with a holding tone, which is removed at the measuring end through a notch (very narrow band) filter.

Common Channel Signaling Access Network (CCSAN)

The term "CCSAN" refers to the network that allows call control information to be transmitted separately, or out-of-band, from the voice communications path. SS7 is the most recent protocol used for common channel signaling.

Communications System

The term "Communications System" denotes channels and other facilities, which are capable of communications between terminal equipment provided by other than Iowa Network.

Certain regulations formerly found on this page now appear on Original Page 53.1.
Certain regulations currently found on this page previously appeared on 1st Revised Page 52.

CENTRALIZED EQUAL ACCESS SERVICE

2. General Regulations (Cont'd)

2.6 Definitions (Cont'd)

Customer(s) (M)

The term "Customer(s)" denotes any individual, partnership, association, joint-stock company, trust, corporation, or governmental entity which subscribes to the services offered under this tariff, including but not limited to, Interexchange Carriers (ICs), End Users and other telecommunication carriers or providers originating or terminating Toll VoIP-PSTN traffic. (M) (C) (C)

Data Transmission (107 Type) Test Line (M)

The term "Data Transmission (107 Type) Test Line" denotes an arrangement which provides for a connection to a signal source which provides test signals for one-way testing of data and voice transmission parameters. (M)

Certain regulations currently found on this page formerly appeared on 1st Revised Page 53.

2. General Regulations (Cont'd)

2.6 Definitions (Cont'd)

Decibel

The term "Decibel" denotes a unit used to express relative difference in power, usually between acoustic or electric signals, equal to ten (10) times the common logarithm of the ratio of two (2) signal powers.

Decibel Reference Noise C-Message Weighing

The term "Decibel Reference Noise C-Message Weighting" denotes noise power measurements with C-Message weighting in decibels relative to a reference 1000 Hz tone of 90 dB below one (1) milliwatt.

Decibel Reference Noise C-Message Referenced to 0

The term "Decibel Reference Noise C-Message Referenced to 0" denotes noise power in "Decibel Reference Noise C-Message Weighing" referred to or measured at a zero transmission level point.

Detail Billing

The term "Detail Billing" denotes the listing of each message and/or rate element for which charges to a customer are due on a bill prepared by Iowa Network.

Echo Control

The term "Echo Control" denotes the control of reflected signals in a transmission path.

Echo Path Loss

The term "Echo Path Loss" denotes the measure of reflected signal at a 4-wire point of interconnection without regard to the send and receive Transmission Level Point.

2. General Regulations (Cont'd)

2.6 Definitions (Cont'd)

Echo Return Loss

The term "Echo Return Loss" denotes a frequency weighted measure of return loss over the middle of the voiceband (approximately five hundred (500) to twenty-five hundred (2500) Hz), where talker echo is most annoying.

End Office Switch

The term "End Office Switch" denotes an Exchange Telephone Company switching system where Telephone Exchange Service customer station loops are terminated for purposes of interconnection to trunks. Included are Remote Switching Modules and Remote Switching Systems served by a host office in a different wire center.

End User

The term "End User" means any customer of an interstate or foreign telecommunications service that is not a carrier, except that a carrier other than a telephone company shall be deemed to be an "end user" when such carrier uses a telecommunications service for administrative purposes, and a person or entity that offers telecommunications service exclusively as a reseller shall be deemed to be an "end user" if all resale transmissions offered by such reseller originate on the premises of such reseller.

Entry Switch

See First Point of Switching.

Envelope Delay Distortion

The term "Envelope Delay Distortion" denotes a measure of the linearity of the phase versus frequency of a channel.

CENTRALIZED EQUAL ACCESS SERVICE

2. General Regulations (Cont'd)

2.6 Definitions (Cont'd)

Equal Level Echo Path Loss

The term "Equal Level Echo Path Loss" (ELEPL) denotes the measure of Echo Path Loss (EPL) at a 4-wire interface which is corrected by the difference between the send and receive Transmission Level Point (TLP) [ELEPL = EPL - TLP (send) + TLP (receive)].

Exchange

The term "Exchange" denotes a unit generally smaller than a Local Access and Transport Area, established by an Exchange Telephone Company for the administration of communications service in a specified area which usually embraces a city, town or village and its environs. It consists of one or more central offices together with the associated facilities used in furnishing communications service within that area. The exchange includes any Extended Area Service area that is an enlargement of an Exchange Telephone company's exchange area to include nearby exchanges. One or more designated exchanges comprise a given Local Access and Transport area.

Exchange Telephone Company

The term "Exchange Telephone Company" denotes a carrier that provides service within a telephone exchange, or within a connected system of telephone exchanges within the same exchange area operated to furnish to subscribers intercommunicating service of the character ordinarily furnished by a single exchange and which is covered by the exchange service charge.

Expected Measured Loss (M)

The term "Expected Measured Loss" denotes a calculated loss which specifies the end-to-end 1004 Hz loss on a terminated test connection between two (2) readily accessible manual or remote test points. It is the sum of the inserted connection loss and test access loss including any test pads. (M)

2. General Regulations (Cont'd)

2.6 Definitions (Cont'd)

Field Identifier

The term "Field Identifier" denotes two (2) or four (4) characters that are used on service orders to convey specific instructions. Field Identifiers may or may not have associated data. Selected Field Identifiers are used in billing systems to generate nonrecurring charges.

First Come - First Served

The term "First Come - First Served" denotes a procedure followed when a shortage of facilities or equipment occurs, such that a service ordered cannot be provided. The orders delayed by the shortage of facilities will be prioritized according to the sequence in which they were received. That is, when facilities or equipment become available, the first order received will be the first order processed.

First Point of Switching

The term "First Point of Switching" denotes the first Iowa Network location at which switching occurs on the terminating path of a call proceeding from the customer's premises to the terminating end office and, at the same time, the last Iowa Network location at which switching occurs on the originating path of a call proceeding from the originating end office to the customer's premises.

Frequency Shift

The term "Frequency Shift" denotes the change in the frequency of a tone as it is transmitted over a channel.

Grandfathered

The term "Grandfathered" denotes Terminal Equipment, Multiline Terminating Systems and Protective Circuitry directly connected to the facilities utilized to provide services under the provisions of this tariff, and which are considered Grandfathered under Part 68 of the F.C.C.'s Rules and Regulations.

CENTRALIZED EQUAL ACCESS SERVICE

2. General Regulations (Cont'd)

2.6 Definitions (Cont'd)

Home

The term "Home" refers to the directing of calls to a specific toll center location or Class 4 office.

Host Office

The term "Host Office" denotes an electronic switching system, which provides call-processing capabilities for one or more Remote Switching Modules or Remote Switching Systems.

Immediately Available Funds

The term "Immediately Available Funds" denotes a corporate or personal check drawn on a bank account and funds which are available for use by the receiving party on the same day on which they are received and include U.S. Federal Reserve bank wire transfers, U.S. Federal Reserve notes (paper cash), U.S. coins, U.S. Postal Money Orders and New York Certificates of Deposit.

Impedance Balance

The term "Impedance Balance" denotes the method of expressing Echo Return Loss and Singing Return Loss at a 4-wire interface whereby the gains and/or loss of the 4-wire portion of the transmission path, including the hybrid, are not included in the specification.

Impulse Noise

The term "Impulse Noise" denotes any momentary occurrence of the noise on a channel over a specified level threshold. It is evaluated by counting the number of occurrences, which exceed the threshold.

Individual Case Basis

The term "Individual Case Basis" denotes a condition in which the regulations if applicable, rates and charges for an offering under the provisions of this tariff are developed and tariffed based on the circumstances in each case. (C) (X)

(X) Issued under authority of Special Permission Number 89-150 of the Federal Communications Commission.

2. General Regulations (Cont'd)

2.6 Definitions (Cont'd)

Inserted Connection Loss

The term "Inserted Connection Loss" denotes the 1004 Hz power difference (in dB) between the maximum power available at the originating end and the actual power reaching the terminating end through the inserted connection.

Interexchange Carrier (IC) or Interexchange Common Carrier

The terms "Interexchange Carrier" (IC) or "Interexchange Common Carrier" denote any individual, partnership, association, joint-stock company, trust, governmental entity or corporation engaged for hire in interstate or foreign communications by wire or radio, between two (2) or more exchanges.

Intermodulation Distortion

The term "Intermodulation Distortion" denotes a measure of the nonlinearity of a channel. It is measured using four (4) tones, and evaluating the ratio (in dB) of the transmitted composite four-tone signal power to the second-order products of the tones (R2), and the third-order products of the tones (R3).

Internet Protocol (IP) Format (N)

The term "Internet Protocol (IP) Format" denotes a packet data-oriented protocol used for communicating call signaling information for both Interstate and intrastate communications. (N)

Interstate Communications

The term "Interstate Communications" denotes both interstate and foreign communications.

Intrastate Communications

The term "Intrastate Communications" denotes any communications within a state subject to oversight by a state regulatory commission as provided by the laws of the state involved.

Line-Side Connection

The term "Line-Side Connection" denotes a connection of a transmission path to the line side of a local exchange switching system.

2. General Regulations (Cont'd)

2.6 Definitions (Cont'd)

Local Access and Transport Area

The term "Local Access and Transport Area" denotes a geographic area established for the provision and administration of communications service. It encompasses one or more designated exchanges, which are grouped to serve common social, economic and other purposes.

Local Tandem Switch

The term "Local Tandem Switch" denotes a local Telephone Company switching unit by which local or access telephonic communications are switched to and from an End Office Switch.

Loop Around Test Line

The term "Loop Around Test Line" denotes an arrangement to provide a means to make certain two-way transmission tests on a manual basis. This arrangement has two terminations, each reached by means of separate telephone numbers and does not require any specific customer equipment. Equipment subject to this test arrangement is at the discretion of the customer.

Loss Deviation

The term "Loss Deviation" denotes the variation of the actual loss from the designed value.

Major Fraction Thereof

The term "Major Fraction Thereof" is any period of time in excess of one half (½) of the stated amount of time. As an example, in considering a period of twenty-four (24) hours, a major fraction thereof would be any period of time in excess of twelve (12) hours exactly. Therefore, if a given service is interrupted for a period of thirty-six (36) hours and fifteen (15) minutes, the customer would be given a credit allowance for two (2) twenty-four (24) hour periods for a total of forty-eight (48) hours.

CENTRALIZED EQUAL ACCESS SERVICE

2. General Regulations (Cont'd)

2.6 Definitions (Cont'd)

Message

The term "Message" denotes a "call" as defined preceding.

Milliwatt (102 Type) Test Line

The term "Milliwatt (102 Type) Test Line" denotes an arrangement which provides a 1004 Hz tone at 0 dBm0 for one-way transmission measurements towards the customer's point of interconnection from a Routing Exchange Carrier end office.

Multi-Frequency (MF) Signaling (N)

The term "Multi-Frequency (MF) Signaling" denotes an in-band signaling method in which call signaling information is transmitted between network switches using the same voiceband channel used for voice. (N)

Network Control Signaling

The term "Network Control Signaling" denotes the transmission of signals used in the telecommunications system which perform functions such as supervision (control, status, and charge signals), address signaling (e.g., dialing), calling and called number identifications, rate of flow, service selection error control and audible tone signals (call progress signals indicating re-order or busy conditions, alerting, coin denominations, coin collect and coin return tones) to control the operation of the telecommunications system.

Onvoy, Inc. (ONVOY)

The term "ONVOY" denotes the SS7 provider who is cooperating with Iowa Network in the joint operation of the CCSAN. MEANS owns and operates an STP located in Plymouth, Minnesota, which is mated to the STP owned and operated by Iowa Network Services, Inc. in Des Moines, Iowa.

CENTRALIZED EQUAL ACCESS SERVICE

2. General Regulations (Cont'd)

2.6 Definitions (Cont'd)

Nonsynchronous Test Line (M)

The term "Nonsynchronous Test Line" denotes an arrangement which provides operational tests which are not as complete as those provided by the synchronous test lines, but can be made more rapidly.

North American Numbering Plan

The term "North American Numbering Plan" denotes a three-digit area (Numbering Plan Area) code and a seven-digit telephone number made up of a three-digit Central Office code plus a four-digit station number.

Off-Hook

The term "Off-hook" denotes the active condition of Switched Access or a Telephone Exchange Service line. (M)

Certain regulations on this page formerly appeared on Original Page 61.

CENTRALIZED EQUAL ACCESS SERVICE

2. General Regulations (Cont'd)

2.6 Definitions (Cont'd)

On-Hook

The term "On-hook" denotes the idle condition of Switched Access or a Telephone Exchange Service line.

Open Circuit Test Line

The term "Open Circuit Test Line" denotes an arrangement, which provides an ac open circuit termination of a trunk by means of an inductor. (C) (X)

Originating Direction

The term "Originating Direction" denotes the use of Access Service for the origination of calls from an End User Premises to a Customer Premises.

Pay Telephone

The term "Pay Telephone" denotes Exchange Telephone Company provided instruments and related facilities that are available to the general public for public convenience and necessity, including public and semi-public telephones, and coinless telephones.

Phase Jitter

The term "Phase Jitter" denotes the unwanted phase variations of a signal.

Point of Interconnection

The term "Point of Interconnection" denotes the demarcation point or network interface, on an Iowa Network premises at which Iowa Network's responsibility for the provision of Centralized Equal Access Service ends. (C) (X) (C) (X)

Premises

The term "Premises" denotes a building, or a portion of a building in a multi-tenant building, or buildings on continuous property (except Railroad Right-of-Way, etc.) not separated by a public highway.

(X) Issued under authority of Special Permission Number 89-150 of the Federal Communications Commission.

CENTRALIZED EQUAL ACCESS SERVICE

2. General Regulations (Cont'd)

2.6 Definitions (Cont'd)

Remote Switching Modules and/or Remote Switching Systems

The terms "Remote Switching Modules" and/or "Remote Switching Systems" denote small, remotely controlled electronic end office switches which obtain their call processing capability from an ESS-type Host Office. The Remote Switching Modules and/or Remote Switching Systems cannot accommodate direct trunks to a customer.

Return Loss

The term "Return Loss" denotes a measure of the similarity between the two (2) impedances at the junction of two (2) transmission paths. The higher the return loss, the higher the similarity.

Registered Equipment

The term "Registered Equipment" denotes the customer's premises equipment which complies with and has been approved within the Registration Provisions of Part 68 of the F.C.C.'s Rules and Regulations.

Routing Exchange Carrier

The term "Routing Exchange Carrier" denotes the Exchange Telephone Company listed in Section 9 whose exchange a customer's end users' end office is located and which routes calls to and from Iowa Network's facilities. (C)

Service Access Code

The term "Service Access Code" denotes a three digit code in the NPA format which is used as the first three digits of a ten digit address and which is assigned for special network uses. Whereas NPA codes are normally used for identifying specific geographical areas, certain Service Access Codes have been allocated in the North American Numbering Plan to identify generic services or to provide access capability. Examples of Service Access Codes include the 800 and 900 codes.

(T)
(T)

CENTRALIZED EQUAL ACCESS SERVICE

2. General Regulations (Cont'd)

2.6 Definitions (Cont'd)

Service Control Point (SCP) (N)

The term "Service Control Point" denotes the CCS/SS7 network node that acts as a host for various database applications and provides switching, routing, and call handling information.

Service Switching Point (SSP)

The term "Service Switching Point" denotes a switching office or node on the CCS/SS7 network, which has the ability to launch queries to a centralized on-line database such as the 800 Database and the Line Information Database (LIDB). The SSP also performs all of the functions of the SP. (N)

Seven Digit Manual Test Line

The term "Seven Digit Manual Test Line" denotes an arrangement which allows the customer to select balance, milliwatt and synchronous test lines by manually dialing a seven (7) digit number of the associated access connection.

CENTRALIZED EQUAL ACCESS SERVICE

2. General Regulations (Cont'd)

2.6 Definitions (Cont'd)

Shortage of Facilities or Equipment

The term "Shortage of Facilities or Equipment" denotes a condition which occurs when Iowa Network does not have appropriate cable, switching capacity, bridging or multiplexing equipment, etc., necessary to provide the Access Service requested by the customer.

Short Circuit Test Line

The term "Short Circuit Test Line" denotes an arrangement, which provides for an ac short circuit termination of a trunk by means of a capacitor of at least four (4) microfarads.

Signaling Network Access Connection (SNAC) (N)

The term "Signaling Network Access Connection" denotes the link between the Signaling Point of Interconnection (SPOI) and the INS/MEANS STPs. The connection also includes the necessary ports on the INS/MEANS STPs.

Signaling Point of Interconnection (SPOI)

The term "Signaling Point of Interconnection" denotes the point of interconnection between Iowa Network and the customer for purposes of exchanging SS7 signaling messages. The SPOIs are located in the metropolitan areas of Des Moines, Iowa and Minneapolis/St. Paul, Minnesota.

Signal Point (SP)

The term "Signal Point" denotes a node on the CCS/SS7 network that converts non-SS7 signals to SS7 protocol, sends and receives messages from one node to another in order to establish and disconnect calls. (N)

Certain regulations previously found on this page can now be found on Original Page 64.1.

CENTRALIZED EQUAL ACCESS SERVICE

2. General Regulations (Cont'd)

2.6 Definitions (Cont'd)

Signal-to-C-Notched Noise Ratio

The term "Signal-to-C-Notched Noise Ratio" denotes the ratio in dB of a test signal to the corresponding C-Notched Noise.

Signal Transfer Point (STP)

The term "Signal Transfer Point" denotes a packet switch that routes signaling messages between SPs, SSPs, and SCPs. Iowa Network in conjunction with ONVOY provides a geographically separated mated pair of STPs for connection to the customer's SS7 network. The STPs are located in Des Moines, Iowa and Plymouth, Minnesota.

Signaling Return Loss

The term "Signaling Return Loss" denotes the frequency weighted measure of return loss at the edges of the voiceband (200 to 500 Hz and 2500 to 3200 Hz), where signaling (instability) problems are most likely to occur.

Subtending End Office of an Access Tandem

The term "Subtending End Office of an Access Tandem" denotes an end office that has final trunk group routing through that tandem.

Synchronous Test Line

The term "Synchronous Test Line" denotes an arrangement, which performs marginal operational tests of supervisory and ring-tripping functions.

Terminating Direction (M)

The term "Terminating Direction" denotes the use of Access Service for the completion of calls from a Customer Premises to an End User Premises. (M)

Certain material currently found on this page formerly appeared on 1st Revised Page 65.

CENTRALIZED EQUAL ACCESS SERVICE

2. General Regulations (Cont'd)

2.6 Definitions (Cont'd)

Toll VoIP – PSTN Traffic (N)

The term "Toll VoIP-PSTN Traffic" denotes a customer's interexchange voice traffic exchanged with the Telephone Company in Time Division Multiplexing format over PSTN facilities, which originates and/or terminates in Internet Protocol (IP) Format. "Toll VoIP-PSTN Traffic" originates and/or terminates in IP Format when it originates from and/or terminates to an end user customer of a service that requires IP-compatible customer premises equipment. (N)

Transmission Measuring (105 Type) Test Line/Responder

The term "Transmission Measuring (105 Type) Test Line/Responder" denotes an arrangement which provides far-end access to a responder and permits two-way loss and noise measurements to be made on trunks from a near end office.

Transmission Path

The term "Transmission Path" denotes an electrical path capable of transmitting signals within the range of the service offering, e.g., a voice grade transmission path is capable of transmitting voice frequencies within the approximate range of three hundred (300) to three thousand (3000) Hz. A transmission path is comprised of physical or derived channels consisting of any form or configuration of facilities plant typically used in the telecommunications industry.

Trunk

The term "Trunk" denotes a transmission path connecting two (2) switching systems in a network, used in the establishment of an end-to-end connection.

Trunk Group

The term "Trunk Group" denotes a set of trunks, which are traffic, engineered as a unit for the establishment of connections between switching systems in which all of the communications paths are interchangeable.

Certain regulations formerly found on this page now appear on 2nd Revised Page 64.1.

2. General Regulations (Cont'd)

2.6 Definitions (Cont'd)

Trunk-Side Connection

The term "Trunk-Side Connection" denotes the connection of a transmission path to the trunk side of a switching system.

Two-Wire to Four-Wire Conversion

The term "Two-Wire to Four-Wire Conversion" denotes an arrangement, which converts a four-wire transmission path to a two-wire transmission path to allow a four-wire facility to terminate in a two-wire entity (e.g., a central office switch).

V and H Coordinates Method

The term "V and H Coordinates Method" denotes a method of computing airline miles between two points by utilizing an established formula, which is based on the vertical and horizontal coordinates of the two points.

Wire Center

The term "Wire Center" denotes a building in which one or more central offices, used for the provision of Telephone Exchange Services, are located.

3.

RESERVED FOR FUTURE USE

4.

RESERVED FOR FUTURE USE

CENTRALIZED EQUAL ACCESS SERVICE

5. Ordering Options for Switched Access Service

5.1 General

This section sets forth the regulations and other related charges for Access Orders for Switched Access Service. These charges are in addition to other applicable charges as set forth in other sections of this Tariff.

An Access Order is an order to provide the customer with Switched Access Service or to provide changes to existing services.

5.1.1 Ordering Conditions

Switched Access Service may be ordered from Iowa Network between the points of interconnection set forth in Section 8 following. A customer may order any number of services of the same type (e.g., Feature Group, Interface Group, etc.), between Iowa Network's central access tandem and a customer point of interconnection set forth in Section 8 following. Switched Access Service between a customer's premises and the points of interconnection set forth in Section 8 following is solely the responsibility of the customer or ordered from another carrier. Switched Access Service from the points of interconnection set forth in Section 8 following to an end office must be ordered from a Participating Telephone Company or other Exchange Telephone Company. Iowa Network will determine the Switched Transport facilities to be provided between an Iowa Network premises set forth in Section 8 following and Iowa Network's central access tandem on the basis of the capacity ordered. (C) (X) | | (C) (X)

(X) Issued under authority of Special Permission Number 89-150 of the Federal Communications Commission.

Certain regulations previously found on this page can now be found on Original Page 69.1.

CENTRALIZED EQUAL ACCESS SERVICE

5. Ordering Options for Switched Access Service (Cont'd)

5.1 General (Cont'd)

5.1.1 Ordering Conditions (Cont'd)

The customer shall supply all the necessary information to provide service, (e.g., customer name and point of interconnection location, customer end user contact and premises location, facility interface, etc.).

When the customer orders FGD service with the CCSA option described in 6.1.1(D) and 6.1.3(B)(3) following, the customer shall provide additional information for the Signaling Network Access Connection such as STP Point codes, location identifier codes and circuit identification codes, etc., as required by Iowa Network. For FGD ordered with the CCSA option, the customer shall work cooperatively with Iowa Network to determine the configuration of SS7 Signaling Network Access Connections required to handle its signaling traffic. Iowa Network, in cooperation with MEANS, shall have the final authority for managing the joint network and ensuring optimal utilization of the SNACs including link and port facilities. (N) (N)

Orders for Switched Access Service between Iowa Network's central access tandem and the points of interconnection set forth in Section 8 following shall be in BHMCs. (M) (M)

5. Ordering Options for Switched Access Service (Cont'd)

5.1 General (Cont'd)

5.1.2 Provision of Other Services

(A) Testing Service, Additional Labor, Restoration Priority, and other services offered under the provisions of this tariff shall be ordered with an Access Order or as set forth in (B) following. The rates and charges for these services, as set forth in other sections of this tariff, will apply in addition to the ordering charges set forth in this section and the rates and charges for the Access Service with which they are associated.

(B) With the agreement of Iowa Network, the items listed in (A) preceding may subsequently be added to the order at any time, up to and including the service date for the Access Service. When added subsequently, charges for a design change as set forth in 5.2.2(C) following will apply when an engineering review is required.

(C) Additional Engineering is not an ordering option, but will be applied to an Access Order when Iowa Network determines Additional Engineering is necessary to accommodate a customer request. When Additional Engineering is required, the customer will be so notified and will be furnished with a written statement setting forth the justification for the Additional Engineering as well as an estimate of the charges. If the customer agrees to the Additional Engineering, a firm order will be established. If the customer does not want the service or facilities after being notified that Additional Engineering is required, the order will be withdrawn and no charges will apply. Once a firm order has been established, the total charge to the customer for the Additional Engineering may not exceed the estimated amount by more than (10%).

CENTRALIZED EQUAL ACCESS SERVICE

5. Ordering Options for Switched Access Service (Cont'd)

5.1 General (Cont'd)

5.1.2 Provision of Other Services (Cont'd)

(C) (Cont'd)

The regulations, rates and charges for Additional Engineering are as set forth in 13.1 following and are in addition to the regulations, rates and charges specified in this section.

5.1.3 Reserved for Future Use

CENTRALIZED EQUAL ACCESS SERVICE

5. Ordering Options for Switched Access Service (Cont'd)

5.2 Access Order

An Access order is used by Iowa Network to provide to a customer Access Service as follows:

- Switched Access Services as set forth in Section 6 following.

- Other Services as set forth in Section 5.1.2 preceding.

When placing an order for Access Service, the customer shall provide, at a minimum, the following information:

- For Feature Group B and Feature Group D Switched Access Service, the customer shall specify the number of busy hour minutes of capacity (BHMC) needed to carry traffic from the end office of a Routing Exchange Carrier set forth in Section 9 following to Iowa Network's central access tandem by type of BHMC and Local Transport options and Local Switching options desired. This information is used to determine the number of transmission paths as set forth in 6.5.5 following. The basic traffic type must also be specified using the same categories as described in 6.1.1 following, to enable efficient provisioning and billing functions. (C)

  For Interim NXX Translation, the customer must place an order with the company who provides the Interim NXX Translation. If the order is placed

CENTRALIZED EQUAL ACCESS SERVICE

5. Ordering Options for Switched Access Service (Cont'd)

5.2 Access Order (Cont'd)

with Iowa Network, the customer must also provide a copy of the order to the Exchange Telephone Companies involved in providing the Interim NXX Translation. The minimum territory (C)
for which Iowa Network will provide Interim NXX Translation is (C)
all the appropriately equipped offices of the Routing Exchange Carriers set forth in Section 9 following for which the customer has ordered.

CENTRALIZED EQUAL ACCESS SERVICE

5. Ordering Options for Switched Access Service (Cont'd)

5.2 Access Order (Cont'd)

Interim NXX Translation. Additionally when new NXX(s) are to be opened up, or when such existing NXX(s) are to be deleted, coincident with the provision of Interim NXX Translation, the customer shall provide such information when placing the order for Interim NXX Translation. For additions and/or deletions of NXX(s) at any other time, the customer shall place an order for such additions and /or deletions. The NXX codes are assigned to specific customers in conformance with the North American Numbering Plan (NANP). NXX code assignment(s) will be made by the Bellcore NANP Coordinator. Iowa Network will use the NXX code to identify the customer to whose point of termination the traffic is to be delivered, (i.e., at appropriately equipped electronic end offices, access tandems or through contracted arrangements with other parties). It is then the responsibility of the customer to do any further translation the customer deems necessary to route the call. Customer assigned NXX codes which have not been ordered will be blocked. (C)

The customer must supply a copy of the order to each carrier involved in providing the access service. (C)

The BHMC may be determined by the customer in the following manner. For each average business day (i.e., 8 A.M. to 11 P.M., Monday through Friday, excluding national holidays), the customer shall determine the highest number of minutes of use for a single hour (e.g., 55 minutes in the 10-11 A.M. hour). The customer shall, for the same hour period (i.e., busy hour) for each of twenty (20) consecutive business days, pick the twenty (20) consecutive business days in a calendar year which add up to the largest number of minutes of use. Both originating and terminating minutes shall be included. The customer shall then determine the average busy hour minutes of capacity (i.e., BHMC) by dividing the largest number of minutes of use figure for the same hour period for the consecutive twenty (20) business day period by twenty (20). This computation shall be performed for each end office the customer wishes to serve. These determinations thus establish the forecasted BHMC for each end office.

5. Ordering Options for Switched Access Service (Cont'd)

5.2 Access Order (Cont'd)

5.2.1 Access Order Service Date Intervals

Access Service is provided with one of the following Service Date Intervals:

- Standard Interval
- Negotiated Interval

Whether the customer's service is subject to standard or negotiated intervals, Iowa Network will provide service interval tables and any associated relevant information to all customers within a reasonable time after a request.

To the extent the Access Service can be made available with reasonable effort, Iowa Network will provide the Access Service in accordance with the customer's requested interval, subject to the following conditions:

(A) Standard Interval

The day upon which the customer has provided to Iowa Network a firm commitment for the service and sufficient information to allow for the processing of the Access Order is the Application Date. On the Application Date, Iowa Network will establish a Service Date. The Service Date is the date on which service is to be made available to the customer. The time required to provision the service (i.e., the interval between the Application Date and the Service Date) is known as the service interval. Standard interval tables and associated information will be provided to customers upon request within a reasonable period of time.

CENTRALIZED EQUAL ACCESS SERVICE

5. Ordering Options for Switched Access Service (Cont'd)

5.2 Access Order (Cont'd)

5.2.1 Access Order Service Date Intervals (Cont'd)

(A) Standard Interval (Cont'd)

Access Services provided in a Standard Interval will be installed during normally scheduled work hours. If a customer requests that installation be done outside of scheduled work hours, and Iowa Network agrees to this request, the customer will be subject to applicable Additional Labor Charges as set forth in 13.2.6(A) following.

(B) Negotiated Interval

The customer may request a service date other than that established pursuant to the standard order service interval guidelines, and Iowa Network, where possible, will establish a negotiated order service date in accordance with such request.

Iowa Network will negotiate a service date interval with the customer when:

(1) There is no Standard Interval for the service, or

(2) The customer requests a service date before or beyond the applicable Standard Interval service date, or

(3) The quantity of Access Services ordered exceeds the quantities specified in the Standard Intervals.

CENTRALIZED EQUAL ACCESS SERVICE

5. Ordering Options for Switched Access Service (Cont'd)

5.2 Access Order (Cont'd)

5.2.1 Access Order Service Date Intervals (Cont'd)

(B) Negotiated Interval (Cont'd)

(3) (Cont'd)

Iowa Network will offer a service date based on the type and quantity of Access Services the customer has requested. The Negotiated Interval may not exceed by more than six (6) months the Standard Interval Service date, or, when there is no Standard Interval, the Iowa Network offered service date. All services for which rates are applied on an individual case basis are provided with a Negotiated Interval.

5.2.2 Access Order Modifications

An Access Order may be modified by the customer prior to the service date as set forth following. One or more of the following charges will apply when such modifications are undertaken. When modifications are undertaken, the service date will be changed if (C) (X)
necessary to complete the requested modifications with the normal (C) (X)
work force assigned to complete such an order in normal work hours. All charges for Access Order modifications will apply on a (C) (X)
per occurrence basis.

Any increase in the number of busy hours minutes of capacity will be treated as a new Access Order (for the increased amount only).

(X) Issued under authority of Special Permission Number 89-150 of the Federal Communications Commission.

5. Ordering Options for Switched Access Service (Cont'd)

5.2 Access Order (Cont'd)

5.2.2 Access Order Modifications

(A) Service Date Change Charge

Access Order service dates may be changed, but the new service date may not exceed the original service date by more than thirty (30) calendar days. When, for any reason, the customer indicates that service cannot be accepted for a period not to exceed thirty (30) calendar days, and Iowa Network accordingly delays the start of service, a Service Date Change Charge will apply. If the customer requested service date is more than thirty (30) calendar days after the original service date, the order will be cancelled by Iowa Network and reissued with the appropriate cancellation charges applied unless the customer indicates that billing for the service is to commence as set forth in 5.2.3(A) following. If Iowa Network determines it can accommodate the customer's request without delaying service dates for orders of other customers, a new service date may be established that is prior to the original standard or negotiated interval service date.

If the service date is changed to an earlier date, and Iowa Network determines additional labor or extraordinary costs are necessary to meet the earlier service date requested by the customer, the customer will be notified by Iowa Network that Expedited Order Charges as set forth in (D) following apply. Such charges will apply in addition to the Service Date Change Charge.

CENTRALIZED EQUAL ACCESS SERVICE

5. Ordering Options for Switched Access Service (Cont'd)

5.2 Access Order (Cont'd)

5.2.2 Access Order Modifications (Cont'd)

(A) Service Date Change Charge (Cont'd)

A Service Date Change Charge will apply, on a per order per occurrence basis, for each service date changed. The applicable charge is:

	Charge
Service Date Change Charge, per order	$19.28

(B) Partial Cancellation Charge

Any decrease in the number of ordered busy hours minutes of capacity will be treated as a partial cancellation and the charges as set forth in 5.2.3.(B) following will apply.

(C) Design Change Charge

The customer may request a design change to the service ordered. A design change is any change to an Access Order, which requires engineering review. An engineering review is a review by Iowa Network personnel, of the service ordered and the requested changes to determine what changes in the design, if any, are necessary to meet the changes requested by the customer. Design changes include such things as the addition or deletion of optional features or functions or a change in the type of channel interface, type of Interface Group or technical specifications package. Design changes do not include a change of customer point of interconnection, end office switch, or Feature Group type. (C) (X)

(X) Issued under authority of Special Permission Number 89-150 of the Federal Communications Commission.

5. Ordering Options for Switched Access Service (Cont'd)

5.2 Access Order (Cont'd)

5.2.2 Access Order Modifications (Cont'd)

(C) Design Change Charge (Cont'd)

Changes of this nature will require the issuance of a new order and the cancellation of the original order with appropriate cancellation charges applied.

Iowa Network will review the requested change, notify the customer whether the change is a design change, if it can be accommodated and if a new service date is required. If the customer authorizes Iowa Network to proceed with the design change, a Design Change Charge will apply in addition to the charge for Additional Engineering as set forth in 13.1 following. If a change of a service date is required, the Service Date Change Charge as set forth in (A) preceding will also apply. The Design Change Charge will apply on a per order per occurrence basis, for each order requiring a design change. The applicable charge is:

	Rate
Design Change Charge, per order	$27.00

(D) Expedited Order Charge

When placing an Access Order, a customer may request a service date that is prior to the standard interval service date. A customer may also request an earlier service date on a pending standard or negotiated interval Access Order. If Iowa Network determines that service can be provided on the requested date and that additional labor costs are required to meet the requested service date, the customer will be notified

5. Ordering Options for Switched Access Service (Cont'd)

5.2 Access Order (Cont'd)

5.2.2 Access Order Modifications (Cont'd)

(D) Expedited Order Charge (Cont'd)

and will be provided with an estimate of the additional charges involved. Charges will be billed at actual cost, not to exceed 10 percent over estimated charges. Such additional charges will be determined and billed to the customer as follows:

To calculate the additional labor charges, Iowa Network will, upon authorization from the customer to incur the additional labor charges, keep track of the additional labor hours used to meet the request of the customer and will bill the customer at the applicable Additional Labor charges as set forth in 13.2.6(A) following.

When the request for expediting occurs subsequent to the issuance of the Access Order, a Service Date Change Charge as set forth in (A) preceding also applies.

5.2.3 Cancellation of an Access Order

(A) A customer may cancel an Access Order for the installation of service on any date prior to the service date. The cancellation date is the date Iowa Network receives written or verbal notice from the customer that the order is to be cancelled. The verbal notice must be followed by written confirmation within ten (10) days. If a customer is unable to accept Access Service within thirty (30) calendar days of the original service date, the customer has the choice of the following options:

CENTRALIZED EQUAL ACCESS SERVICE

5. Ordering Options for Switched Access Service (Cont'd)

5.2 Access Order (Cont'd)

5.2.3 Cancellation of an Access Order (Cont'd)

(A) (Cont'd)

- The Access Order shall be cancelled and charges set forth in (B) following will apply, or

- Billing for the service will commence.

If no cancellation request is received within the specified thirty (30) calendar days, billing for the service will commence.

In such instances, the cancellation date or the billing date, depending on which option is selected by the customer, shall be the thirty-first (31st) day beyond the original service date of the Access Order.

(B) When a customer cancels an Access Order for the installation of service, a Cancellation Charge will apply as follows:

(1) Installation of Switched Access Service facilities is considered to have started when Iowa Network incurs any cost in connection therewith or in preparation thereof which would not otherwise have been incurred.

(2) Where the customer cancels an Access Order prior to the start of installation of access facilities, no charges shall apply.

(3) Where installation of access facilities has been started prior to the cancellation, the charges specified in (a) or (b) following, whichever is lower, shall apply.

CENTRALIZED EQUAL ACCESS SERVICE

5. Ordering Options for Switched Access Service (Cont'd)

5.2 Access Order (Cont'd)

5.2.3 Cancellation of an Access Order (Cont'd)

(B) (Cont'd)

(3) (Cont'd)

(a) A charge equal to the costs incurred in such installation, less estimated net salvage. Such charge is determined as detailed in (4) following.

(b) The charge for the minimum period of Switched Access Service ordered by the customer.

(4) Charges applicable as specified in (3)(a) preceding include the nonrecoverable cost of equipment and material ordered, provided or used, plus the nonrecoverable cost of installation and removal including the costs of engineering, labor supervision, transportation, rights-of-way and other associated costs.

(C) When a customer cancels an order for the discontinuance of service, no charges apply for the cancellation.

(D) If Iowa Network misses a service date by more than thirty (30) days due to circumstances over which it has direct control (excluding, e.g., acts of God, governmental requirements, work stoppages and civil commotions), the customer may cancel the Access Order without incurring cancellation charges.

CENTRALIZED EQUAL ACCESS SERVICE

5. Ordering Options for Switched Access Service (Cont'd)

5.2 Access Order (Cont'd)

5.2.4 Selection of Facilities for Access Orders

(A) For all Access Orders, the option to request a specific transmission path is not provided.

5.2.5 Minimum Period

(A) The minimum period for which Access Service is provided and for which charges are applicable, is one (1) month.

(B) Administrative Changes as set forth in 6.7.1(C) following for Switched Access Service may be made without a change in minimum period requirements.

(C) Changes other than those identified in 6.7.1(C) following will be treated as a discontinuance of the existing service and an installation of a new service. All associated nonrecurring charges will apply for the new service. A new minimum period will be established for the new service. The customer will also remain responsible for all outstanding minimum period obligations associated with the disconnected service.

The changes listed below are those which will be treated as a discontinuance and installation of service and for which a new minimum period will be established.

(1) A change in type of service (i.e., one type of Switched Access Feature Group to another except as set forth in 6.7.5 following),

(2) A change in the service to reconfigure FGD trunks to add or discontinue SS7 signaling capability. (N) | (N)

CENTRALIZED EQUAL ACCESS SERVICE

5. Ordering Options for Switched Access Service (Cont'd)

5.2 Access Order (Cont'd)

5.2.6 Minimum Period Charges

When Access Service is disconnected prior to the expiration of the minimum period, rates and charges are applicable for the balance of the minimum period. A disconnect constitutes facilities being returned to available inventory.

The Minimum Period Charge for monthly billed services will be determined as follows:

(A) For Switched Access Service, the charge for a month or fraction thereof is equal to the applicable recurring charges plus any nonrecurring charge(s) that may be due. (C) (C)

5.2.7 Reserved for Future Use

CENTRALIZED EQUAL ACCESS SERVICE

5. Ordering Options for Switched Access Service (Cont'd)

5.3 Available Inventory

Available inventory is limited and does not include facilities used to provide working services or facilities previously ordered, reserved for pending orders or held as maintenance spare. Available inventory is the Iowa Network facilities (e.g., loop pairs, interoffice pairs, carrier channels, circuit equipment trunk equipment, and switching equipment) in place, when the customer places an order, or under construction to be ready to meet future customer orders. The available date for facilities under construction is the date such facility construction is completed, including line up and testing, and made available to meet customer needs. Iowa Network will make every reasonable effort to maintain sufficient available inventory to provide Centralized Equal Access Service in accordance with customers' requested service date intervals. To the extent that service can be provided, Access Orders will be satisfied from available inventory. (C) (X)

(X) Issued under authority of Special Permission Number 89-150 of the Federal Communications Commission.

CENTRALIZED EQUAL ACCESS SERVICE

5. Ordering Options for Switched Access Service (Cont'd)

5.4 Access Orders for Services Provided by Iowa Network and Exchange Telephone Companies

(A) Access Services provided by Iowa Network and Exchange Telephone Companies are services where one end of the Transport element is in the operating territory of an Exchange Telephone Company and Iowa Network provides a portion of the Transport element between two or more of the points of interconnection listed in Section 8 following or where the Interim NXX Translation Service (C)
is provided by Iowa Network. Iowa Network will coordinate and (C)
arrange for the provision of the services ordered. In addition to the Switched Transport rate billed by Iowa Network as set forth in Section 6 following, each Exchange Telephone Company will provide the portion of the Transport element in its operating territory and will bill its charges in accordance with its tariff.

(1) When Switched Access Services are ordered to Iowa Network's central access tandem, the customer will place the order with Iowa Network. The customer must also supply a copy of the order to each Exchange Telephone Company involved in providing the service and subtending Iowa Network's central access tandem.

(2) When Switched Access Services are ordered to a point of interconnection listed in Section 8 following other than Iowa Network's central access tandem, the customer will place the order as follows:

(a) For Feature Group B Switched Access Service, the customer must place the order with Iowa Network. The customer must also supply a copy of the order to each Exchange Telephone Company involved in providing the service and subtending Iowa Network's central access tandem.

CENTRALIZED EQUAL ACCESS SERVICE

5. Ordering Options for Switched Access Service (Cont'd)

5.4 Access Orders for Services Provided by Iowa Network and Exchange Telephone Companies (Cont'd)

(A) (Cont'd)

(2) (Cont'd)

(b) For Feature Group D Switched Access Service, the customer must place the order with the Exchange Telephone Company in whose territory the end office is located. The customer must also supply a copy of the order to Iowa Network. (C) (C)

(3) For the Switched Access Services ordered set forth in (1) and (2) preceding, the customer must also supply a copy of the order to the Exchange Telephone Company in whose operating territory a customer premises is located and any other Exchange Telephone Company involved in providing the service.

(4) For initiation, additions, changes or deletions to the Interim NXX Translation code(s), the customer must place an order with the carrier who provides the Interim NXX Translation. The customer must also provide a copy of the order to the Exchange Telephone Companies subtending the Interim NXX Translation office. (N) | | | | (N)

CENTRALIZED EQUAL ACCESS SERVICE

5. Ordering Options for Switched Access Service (Cont'd)

5.4 Access Orders for Services Provided by Iowa Network and Exchange Telephone Companies (Cont'd)

(A) (Cont'd)

(4) (Cont'd)

(N)

When Feature Group D is ordered with the Interim NXX Translation optional feature, the customer shall specify the Service Access Code(s) (e.g., 800 or 900) and their associated NXX Code(s) to be translated. The initial and subsequent orders to add, change, or delete Interim NXX Translation codes shall be placed separately or in combination with orders to change Feature Group D Switched Access BHMC. Customer assigned NXX codes, which have not been ordered, will be blocked.

Orders for the Interim NXX Translation optional feature shall not be required until such time as a customer other than an MTS/WATS provider requests Interim NXX Translation of Service Access Codes. Upon receipt of such order, Iowa Network shall notify the MTS/WATS provider of the activation of the Interim NXX Translation Service for the Service Access Code. Following such initial activation, all customers are required to place orders for Interim NXX Translation of the Service Access Code.

(N)

CENTRALIZED EQUAL ACCESS SERVICE

6. Switched Access Service

6.1 General

Switched Access Service, when combined with the services offered by Exchange Telephone Companies, is available to Customers. Iowa Network provides a two-point electrical communications path between a point of interconnection with the transmission facilities of an Exchange Telephone Company at a location listed in Section 8 following and Iowa Network's central access tandem where the Customer's traffic is switched to originate or terminate its communications. It also provides for the switching facilities at Iowa Network's central access tandem. Iowa Network's central access tandem is Iowa Network's switching system located in Des Moines, Iowa that provides a concentration and distribution function for originating and terminating traffic between the end offices of Routing Exchange Carriers listed in Section 9 following and a Customer's point of interconnection set forth in Section 8 following. The Customer's point of interconnection is the demarcation point or network interface between Iowa Network's communications facilities and Customer provided facilities. (T) (T) (T) (T)

Rates and charges for Switched Access Service are set forth in 6.8 following. The application of rates for Switched Access Service is described in 6.7 following. Any entity delivering non-access service traffic to INS must either negotiate an interconnection agreement with INS or pay the rates and charges set forth in 6.8 following. (C) (C)

Toll VoIP-PSTN traffic will be treated pursuant to the Federal Communications Commission's rules in compliance with its Report and Order in CC Docket Nos. 96-45 and 01-92; GN docket No. 09-51; WC Docket Nos. 03-109, 05-337, 07-135 and 10-90; and WT Docket No. 10-208, adopted 10/27/11 and released 11/18/11 (FCC 11-161). In the absence of an interconnection agreement between INS and the Customer specifying the treatment of Toll VoIP-PSTN traffic, INS will bill the Customer the applicable switched access rates and charges specified in 6.8 following on all jurisdictionally interstate and intrastate voice traffic identified as Toll-PSTN traffic. (N)

(A) Setting up PVU Factor

INS Customers may arrange for the calculation and application of a Percent-VoIP-Usage Factor applicable to their INS traffic. INS Customers may determine the number of Toll VoIP-PSTN minutes of use ("MOU") to which interstate rates will be applied by applying a Percent VoIP Usage ("PVU") factor to the total toll intrastate and interstate access MOU exchanged between the INS Customer and INS. The PVU will be derived and applied as follows: (N)

Certain regulations formerly found on this page now appear on 4th Revised Page 89.

CENTRALIZED EQUAL ACCESS SERVICE

6. Switched Access Service

6.1 General

(A) (Cont'd) (N)

(1) The INS Customer may calculate and furnish to INS a factor (the "PVU") representing the percentage of the total intrastate and interstate access MOU that the INS Customer exchanges with INS that is Toll VoIP-PSTN Traffic. This PVU shall be based on information such as traffic studies, actual call detail, or other relevant and verifiable information.

(2) The INS Customer will submit with the factor an overview of the process used to determine the PVU factor and the calculations used to determine the PVU factor. The INS Customer shall retain the call detail, work papers, and information used to develop the PVU factors for a minimum of one year from the date of first use of the factor.

(3) INS will apply the PVU factor to the total intrastate access MOUs exchanged with the Customer to determine the number of Toll VoIP-PSTN Traffic MOUs.

(4) If the INS customer does not furnish INS with a PVU pursuant to the preceding paragraph 1, INS will utilize a PVU equal to zero.

(B) Initial PVU Factor

If the PVU factor is not supplied to INS by January 1, 2012, when a factor is provided, INS will adjust the Customer's bills to reflect the PVU retroactively to January 1, 2012. This retroactive adjustment will be made to January 1, 2012, provided that the INS Customer provides the factor to INS no later than March 1, 2012. A PVU factor submitted without complying with the requirements identified in 6.1(A) above will not be considered received or filed until the date a fully compliant PVU factor is received by INS.

(C) PVU Factor Updates

The INS Customer may update the PVU factor quarterly using the method set forth above. If the Customer chooses to submit such updates, it shall provide to INS, no later than 15 days after the first day of January, April, July and/or October of each year, a revised PVU factor based on data for the prior three months, ending the last day of December, March, June and September, respectively. The revised PVU factor will apply prospectively and serve as the basis for billing until superseded by a new PVU. (N)

CENTRALIZED EQUAL ACCESS SERVICE

6. Switched Access Service

6.1 General

(D) PVU Factor Verification (N)

Not more than four times in any year, INS may ask the INS Customer to verify the PVU factor furnished to INS. The Customer shall comply, and shall reasonably provide the records and other information used to determine the PVU factors. INS may dispute the INS Customer's PVU factor based upon (a) a review of the data and information provided by the Customer; (b) an INS reasonable review of other market information, including state level results based on the FCC Local Competition Reports or other relevant data; or (c) a change in the reported PVU factor by more than five percentage points from the preceding quarter. Any changes in the PVU factor determined acceptable after a verification review shall relate back to the date upon which the PVU factor subject to verification was first applied and the Customer bills will be adjusted retroactively to reflect the changed PVU. If a provided PVU factor had not been applied (held until verified), the Customer bills will be adjusted retroactively at the verified level in accordance with the schedule set forth in 6.1 (C) above. (N)

CENTRALIZED EQUAL ACCESS SERVICE

6. Switched Access Service

6.1 General

6.1.1 Feature Group Arrangements and Manner of Provision (M)

Switched Access Service is provided in two service categories called Feature Groups. These are differentiated by their technical characteristics and the manner in which an end user accesses them in originating calling, e.g., with or without an access code. In addition, Common Channel Signaling Access and Interim NXX Translation is provided in conjunction with Feature D Switched Access Service. Following is a brief description of each Feature Group arrangement, and the CCSA and Interim NXX Translation optional features. (M)

(A) Reserved for Future Use

(B) Feature Group B (FGB)

FGB Access, which is available to all customers, provides trunk side access at a customer's point of interconnection with an associated uniform 950-0XXX or 950-1XXX access code for the customer's use in originating and terminating communications. A more detailed description of FGB Access is provided in 6.2.2 following.

(C) Feature Group D (FGD)

FGD Access, which is available to all customers, provides trunk side access at a customer's point of interconnection with an associated uniform 10XXX access code for the customer's use in originating and terminating communications unless a Routing Exchange Carrier's end office is unable to provide a uniform 10XXX code. The end offices of Routing Exchange Carriers that are unable to provide a uniform 10XXX code are set forth in Section 6.2.4 following.

(D) Joint Provision of Common Channel Signaling Access (CCSA)

CCSA is a nonchargeable optional feature available with FGD access service. CCSA allows the customer to establish a connection with the Iowa Network/ONVOY jointly operated CCSAN at the Signaling Points of Interconnection (SPOIs) in the metropolitan areas of Des Moines, Iowa and Minneapolis/St. Paul, Minnesota for transporting call control information. Transmission specifications, diversity requirements, and testing parameters are set forth in Technical Reference TR-TSV-000905 and TR-TSV-000954.

Certain regulations currently found on this page previously appeared on 3rd Revised Page 88.

6. Switched Access Service (Cont'd)

6.1 General (Cont'd)

6.1.1 Feature Group Arrangements and Manner of Provision (Cont'd)

(D) Joint Provision of Common Channel Signaling Access (CCSA) (Cont'd)

An STP in Des Moines, Iowa will be owned and operated by Iowa Network, for CCSA in Iowa while an STP in Plymouth, Minnesota will be owned and operated by ONVOY for CCSA in Minnesota. (C)
However, Iowa Network and ONVOY will cooperate to provide (C)
redundancy to their respective CCSA networks. Iowa Network and ONVOY will jointly provide the SNACs, which include the ports on (C)
Iowa Network and ONVOY STPs and the link facilities between the (C)
STPs.

The CCSAN consists of a mated pair of STPs which operate completely parallel to each other, a pair of diverse facilities connecting the STPs, and access links to each of the local telephone company SP/SSPs from each STP. This configuration ensures network reliability by providing geographic diversity and redundancy of signal switching and transport.

Iowa Network will provide the signaling facilities between the Iowa Network Routing Exchange Carrier end offices and the Des Moines, Iowa STP. ONVOY will provide the signaling facilities between the (C)
ONVOY Routing Exchange Carrier end offices and the Plymouth, (C)
Minnesota STP. The interstate facilities connecting the two STPs will be jointly provided by Iowa Network and ONVOY. (C)

The access link to the ONVOY STP from the Iowa Network Routing Exchange Carrier end offices is provided by Iowa Network to the centralized access tandem and then jointly by Iowa Network and ONVOY to the ONVOY STP. Likewise, the access link to the Iowa Network STP from the ONVOY Routing Exchange Carriers is provided over ONVOY facilities to the ONVOY centralized equal (C)
access tandem, and

6. Switched Access Service (Cont'd)

6.1 General (Cont'd)

6.1.1 Feature Group Arrangements and Manner of Provision (Cont'd)

(D) Joint Provision of Common Channel Signaling Access (CCSA) (Cont'd)

then over jointly provided facilities to the Iowa Network STP.

The interexchange carrier is responsible for the signaling facilities from the interexchange carrier's STPs, which shall consist of a quad (4) of 56 Kbps links, to the SPOIs on the Iowa Network/ONVOY network. Iowa Network and ONVOY will each provide a pair of Signaling Network Access Connections (SNACs) which includes any facilities required between the Iowa Network/ONVOY STPs and the interexchange carrier SPOIs and the ports on the mated STPs. An interexchange carrier who wishes to connect a single SP or SSP to the CCSAN may do so by providing a pair of 56 Kbps links, one to a SPOI in Des Moines, and one to the SPOI in Minneapolis/St. Paul, and Iowa Network and ONVOY will provide the corresponding SNACs. (C) (C) (C)

The use of the SNAC and the STP Port will be bi-directional in that SS7 message sequences may be originated from either the interexchange carrier's network or from the INS network. The message sequences initiated from the INS network may include ISDN User Part (ISUP) messages, Transaction Capabilities Application Part (TCAP) messages, in support of functions such as 800 Database queries and Line Information Data Base (LIDB) queries, and other messages in support of services for which the networks of both the interexchange carrier and Iowa Network are used.

CENTRALIZED EQUAL ACCESS SERVICE

6. Switched Access Service (Cont'd)

6.1 General (Cont'd)

6.1.1 Feature Group Arrangements and Manner of Provision (Cont'd)

(D) Joint Provision of Common Channel Signaling Access (CCSA) (Cont'd)

The following diagram illustrates how the Iowa Network/ONVOY SS7 network will interconnect with the interexchange carrier's network, independent of the voice (CEA) communications path. (C)

CENTRALIZED EQUAL ACCESS SERVICE

6. Switched Access Service (Cont'd)

6.1 General (Cont'd)

6.1.1 Feature Group Arrangements and Manner of Provision (Cont'd)

(D) Joint Provision of Common Channel Signaling Access (CCSA) (Cont'd)

(C)

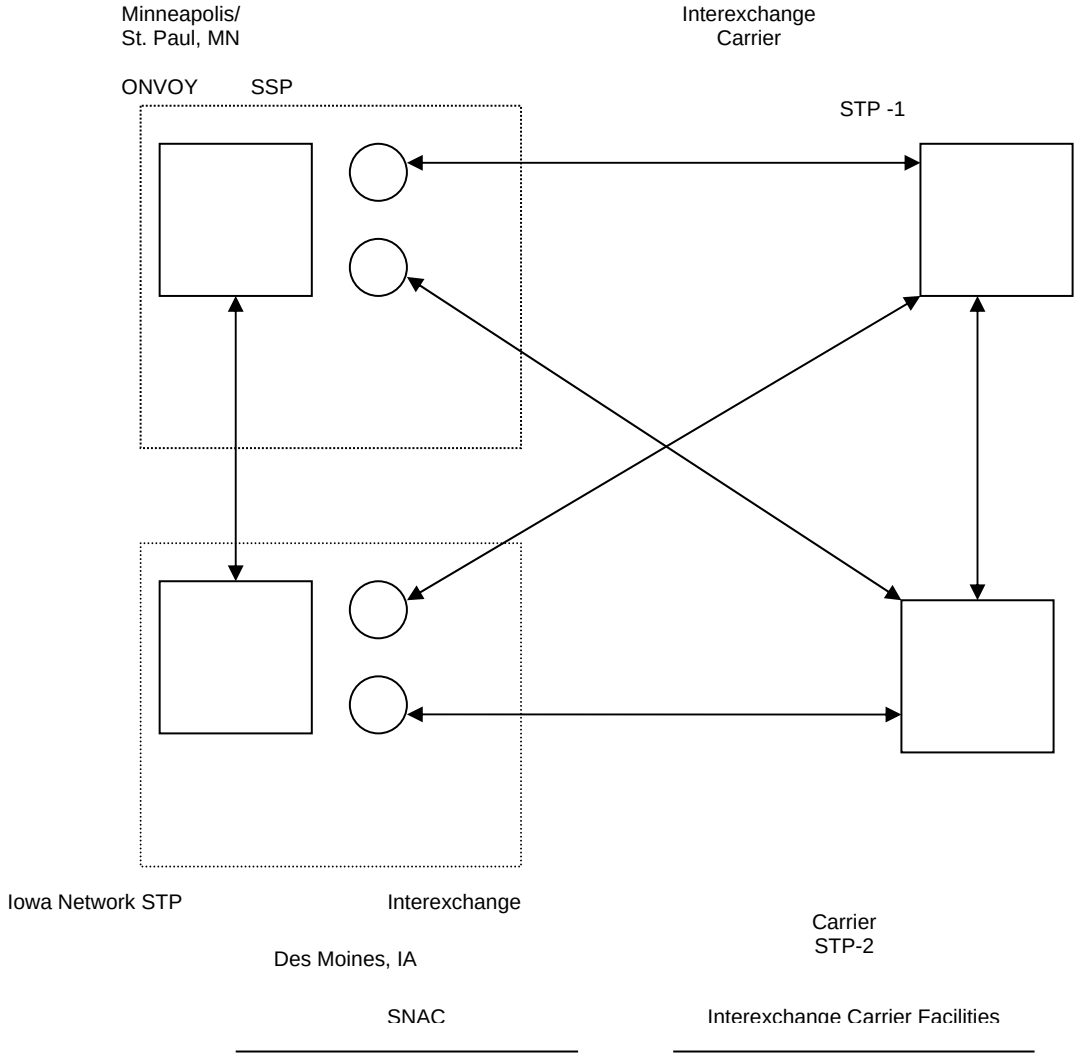

SNAC - Signaling Network Access Connection
SPOI - Signaling Point of Interconnection
STP - Signal Transfer Point

CENTRALIZED EQUAL ACCESS SERVICE

6. Switched Access Service (Cont'd)

6.1 General (Cont'd)

6.1.1 Feature Group Arrangements and Manner of Provision (Cont'd)

(E) Interim NXX Translation (C)

The Interim NXX Translation optional feature is an originating offering utilizing trunk side Switched Access Service and provides a customer identification function based on the dialed SAC and NXX code. (C) (C) | (C)

For example, when an 1+800+NXX-XXXX or an 1+900+NXX-XXXX call is originated by an end user, Iowa Network or a Routing Exchange Carrier will perform the customer identification function based on the dialed digits to determine the customer location to which the call is to be routed. If the call originates from an end office switch not equipped to provide the customer identification function, the call will be routed to Iowa Network's central access tandem. Once customer identification has been established, the call will be routed to the customer. Calls originating from an end office switch at which the customer identification function is performed, but to which the customer has not ordered Interim NXX Translation, will be blocked. Calls to a 900 number from coin telephones, 0+, 0-, 10XXX, Inmate Service, Hotel/Motel Service and calling card calls will be blocked. (C) (C) | (C)

The charge for Interim NXX Translation is as set forth in Section 6.8.1(C) following. (N) (N)

6. Switched Access Service (Cont'd)

6.1 General (Cont'd)

6.1.1 Feature Group Arrangements and Manner of Provision (Cont'd)

(F) Manner of Provision

Switched Access is furnished in busy hour minutes of capacity (BHMCs). Iowa Network will determine the Switched Transport facilities to be provided on the basis of the busy hour minutes of capacity ordered as set forth in 5.2 preceding. Switched Access is furnished in trunks between the customer's premises and the points of interconnection set forth in Section 8 following.

BHMCs are differentiated by type and directionality of traffic carried over a Switched Access Service arrangement. Differentiation of traffic among BHMC types is necessary for Iowa Network to properly design Switched Access Service to meet the traffic carrying capacity requirement of the customer.

There are two major BHMC categories identified as: Originating and Terminating. Originating BHMCs represent access capacity for carrying traffic from the end user to Iowa Network's central access tandem. Terminating BHMCs represent access capacity for carrying traffic from Iowa Network's central access tandem to the end user. When ordering capacity for Switched Access Service, the customer must at a minimum specify such access capacity in terms of Originating BHMCs and Terminating BHMCs.

Because some customers will wish to further segregate their originating traffic into separate trunk groups, Originating BHMCs are further categorized into Domestic, 800, 900,

CENTRALIZED EQUAL ACCESS SERVICE

6. Switched Access Service (Cont'd)

6.1 General (Cont'd)

6.1.1 Feature Group Arrangements and Manner of Provision (Cont'd)

(F) Manner of Provision (Cont'd)

and IDDD. Domestic BHMCs represent access capacity for carrying only domestic traffic other than 800 and 900 traffic; IDDD BHMCs represent access capacity for carrying only international traffic; and, 800 and 900 BHMCs represent access capacity for carrying, respectively, only 800 and 900 traffic. When ordering such types of access capacity, the customer must specify Domestic, 800, 900, or IDDD BHMCs.

6.1.2 Reserved for Future Use (C)

CENTRALIZED EQUAL ACCESS SERVICE

6. Switched Access Service (Cont'd)

6.1 General (Cont'd)

6.1.3 Rate Categories

There are three rate categories, which apply to the provision of Switched Access Service in conjunction with Centralized Equal Access Service: (C)

- Switched Transport (described in 6.1.3(A) following:

- Non-chargeable Optional Features (described in 6.1.3(B) following: (N)

(N)

- Chargeable Optional Features (described in 6.1.3(C) following:

The following diagram depicts a generic view of how Centralized Equal Access Service is combined with the service of the Routing Exchange Carriers set forth in Section 9 following to provide a complete Switched Access Service.

CENTRALIZED EQUAL ACCESS SERVICE

6. Switched Access Service (Cont'd)

6.1 General (Cont'd)

6.1.3 Rate Categories (Cont'd)

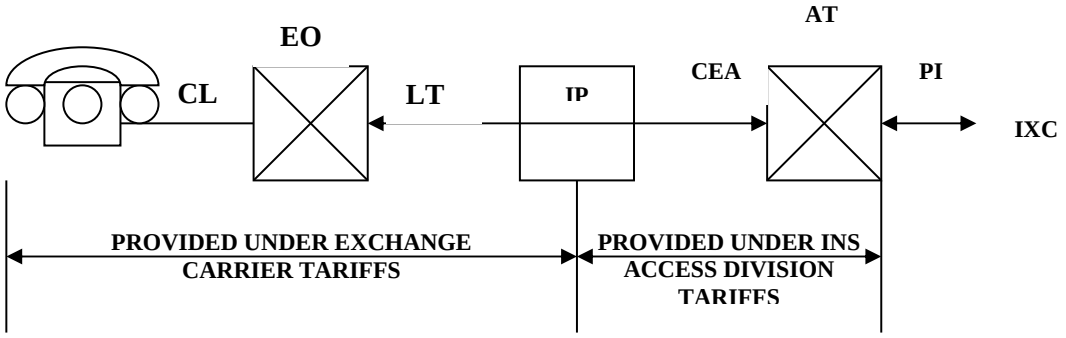

OR

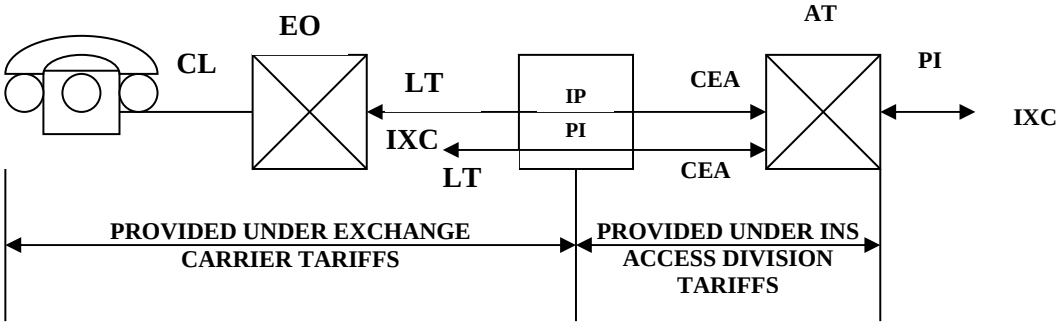

AT	-	Iowa Network's Central Access Tandem	(M) (X)
CEA	-	Centralized Equal Access Service (Non-distance sensitive rate)	| |
CL	-	Carrier Common Line	| |
EO	-	End Office	| |
IXC	-	Interexchange Carrier	| |
LT	-	Local Transport	| |
PI	-	Customers Point of Interconnection	| |
IP	-	Iowa Network Premises	(M) (X)

(X) Issued under authority of Special Permission Number 89-150 of the Federal Communications Commission.

Certain regulations found on this page formerly appeared on Original Page 95.

CENTRALIZED EQUAL ACCESS SERVICE

6. Switched Access Service (Cont'd)

6.1 General (Cont'd)

6.1.3 Rate Categories (Cont'd)

(A) Switched Transport

Switched Transport is a High Capacity (1.544 Mbps) frequency transmission path composed of facilities determined by Iowa Network. The two-way frequency transmission path permits the transport of calls from Iowa Network's central access tandem to an Iowa Network premises listed in Section 8 following and from such Iowa Network Premises to Iowa Network's central access tandem.

Switched Transport is provided by Iowa Network at customer's point of interconnection. A customer's point of interconnection may be located at Iowa Network's central access tandem or another Iowa Network premises as set forth in Section 8 following.

When a customer's point of interconnection is located at an Iowa Network's central access tandem, the Switched Transport rate applies per access minute for transporting a customer's call between a customer's point of interconnection at Iowa Network's central access tandem and another Iowa Network premises listed in Section 8 following. (C) (X) | | (C) (X) (C) (X) (C) (X)

(C) (X) | | | | (C) (X)

(X) Issued under authority of Special Permission Number 89-150 of the Federal Communications Commission.

Certain regulations previously found on this page can now be found on 1st Revised Page 94.

CENTRALIZED EQUAL ACCESS SERVICE

6. Switched Access Service (Cont'd)

6.1 General (Cont'd)

6.1.3 Rate Categories (Cont'd)

(A) Switched Transport (Cont'd)

The application of the Switched Transport rate to such access minutes is illustrated in the following diagram:

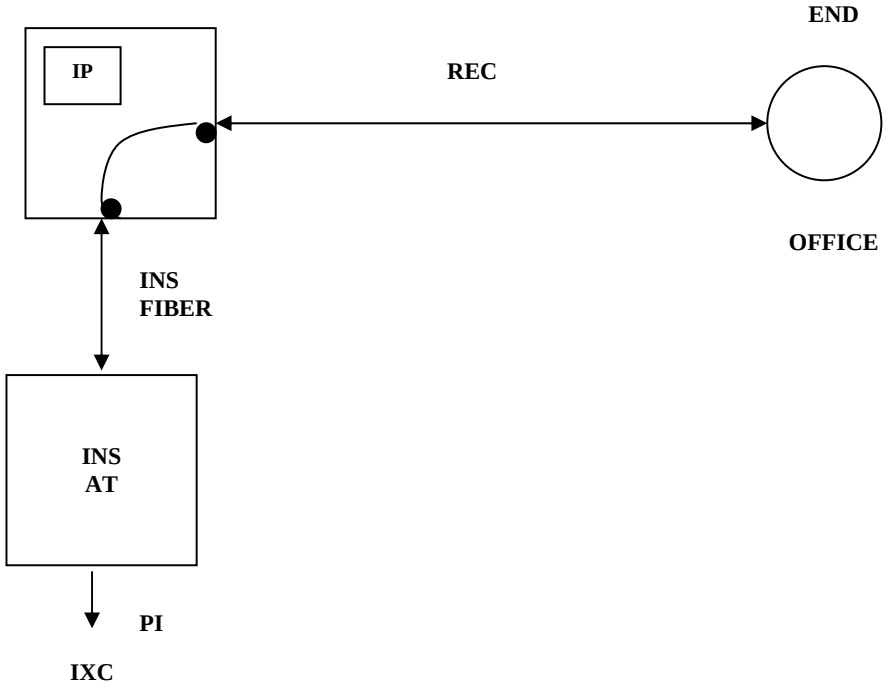

AT	-	Iowa Network Central Access Tandem
INS	-	Iowa Network Services, Inc.
IXC	-	Interexchange Carrier
PI	-	Customer's Point of Interconnection
REC	-	A Routing Exchange Carrier's Transmission Facilities
IP	-	Iowa Network Premises

(M) (X)
| |
(M) (X)

(X) Issued under authority of Special Permission Number 89-150 of the Federal Communications Commission.

Certain regulations found on this page formerly appeared on Original Page 97.

6. Switched Access Service (Cont'd)

6.1 General (Cont'd)

6.1.3 Rate Categories (Cont'd)

(A) Switched Transport (Cont'd)

When a customer's point of interconnection is located at an Iowa Network premises listed in Section 8 following other than Des Moines, the Switched Transport rate only applies to the access minutes for transporting the customer's call in the terminating direction from Iowa Network's central access tandem back to the same or a different Iowa Network premises listed in Section 8 following. The application of the Switched Transport rate for such a call is illustrated in the following diagram: (C) (X)

(C) (X)

(C) (X)

(C) (X)

(C) (X)

(X) Issued under authority of Special Permission Number 89-150 of the Federal Communications Commission.

Certain regulations previously found on this page can now be found on 1st Revised Page 96.

CENTRALIZED EQUAL ACCESS SERVICE

6. Switched Access Service (Cont'd)

6.1 General (Cont'd)

6.1.3 Rate Categories (Cont'd)

(A) Switched Transport (Cont'd)

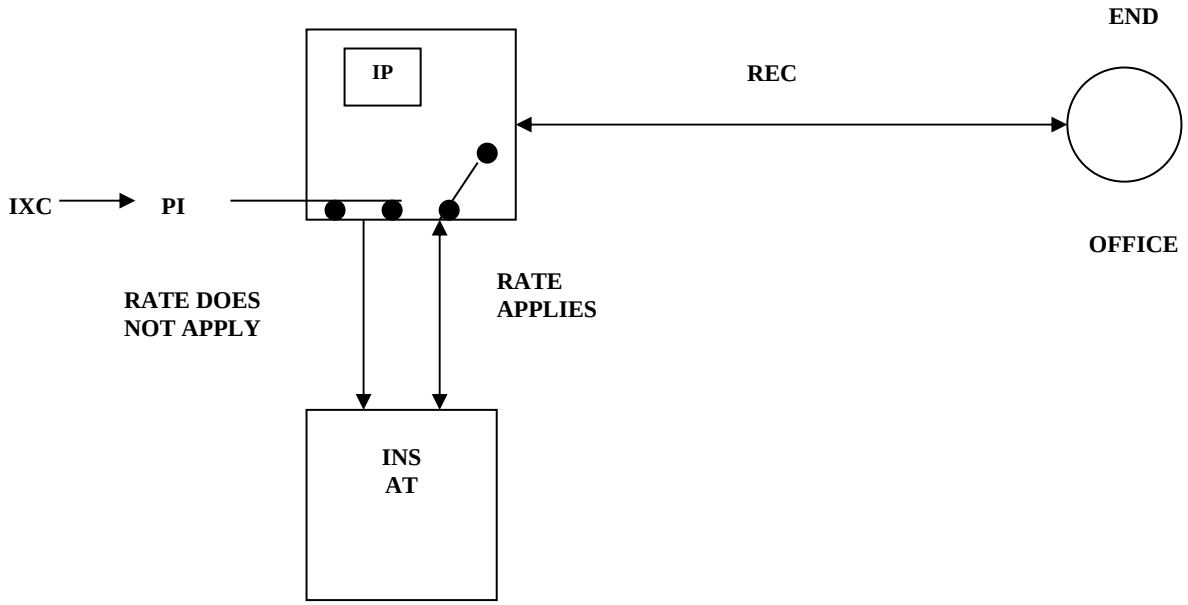

AT	-	Iowa Network's Central Access Tandem	(M) (X)
PI	-	Customer's Point of Interconnection	| |
INS	-	Iowa Network Services, Inc.	| |
IXC	-	Interexchange Carrier	| |
REC	-	A Routing Exchange Carrier's Transmission Facilities	| |
IP	-	Iowa Network Premises	(M) (X)

(X) Issued under authority of Special Permission Number 89-150 of the Federal Communications Commission.

Certain regulations found on this page formerly appeared on Original Page 99.

CENTRALIZED EQUAL ACCESS SERVICE

6. Switched Access Service (Cont'd)

6.1 General (Cont'd)

6.1.3 Rate Categories (Cont'd)

(A) Switched Transport (Cont'd)

When a customer's point of interconnection is located at an Iowa Network premises listed in Section 8 following other than Des Moines, the Switched Transport rate only applies to the access minutes for transporting the customer's call in the originating direction from that Iowa Network premises to Iowa Network's central access tandem. The application of the Switched Transport rate for such a call is illustrated in the following diagram: (C) (X) | | (C) (X) (C) (X) (C) (X) (C) (X)

(X) Issued under authority of Special Permission Number 89-150 of the Federal Communications Commission.

Certain regulations previously found on this page can now be found on 1st Revised Page 98.

CENTRALIZED EQUAL ACCESS SERVICE

6. Switched Access Service (Cont'd)

6.1 General (Cont'd)

6.1.3 Rate Categories (Cont'd)

(A) Switched Transport (Cont'd)

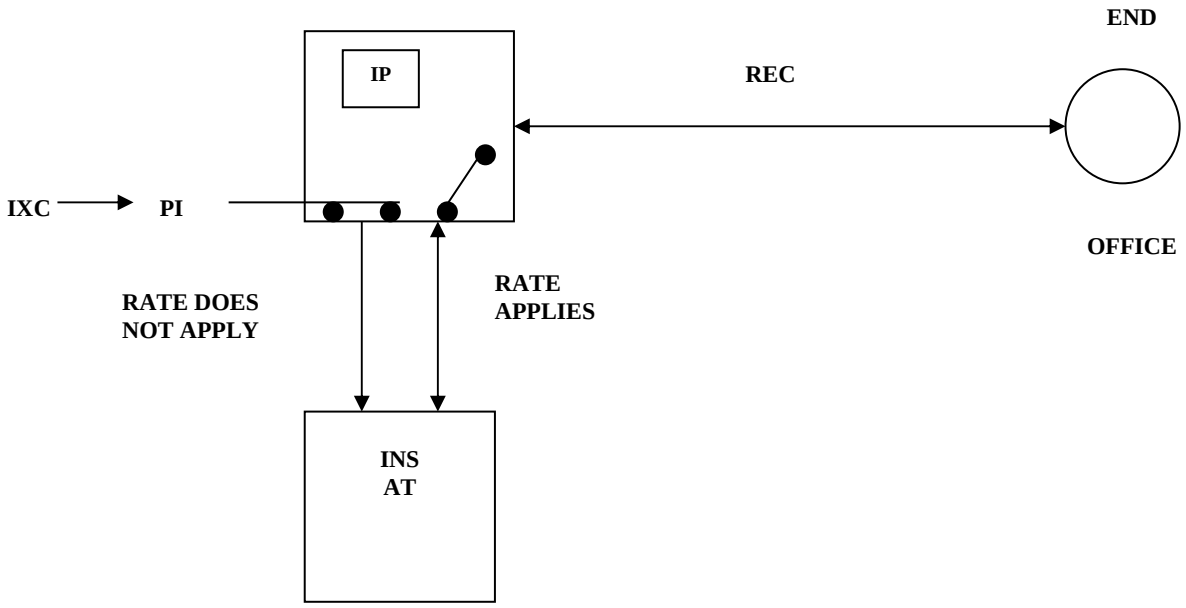

AT	-	Iowa Network's Central Access Tandem
INS	-	Iowa Network Service, Inc.
IXC	-	Interexchange Carrier
PI	-	Customer's Point of Interconnection
REC	-	A Routing Exchange Carriers Transmission Facilities
IP	-	Iowa Network Premises

(M) (X)
| |
| |
| |
| |
(M) (X)

(X) Issued under authority of Special Permission Number 89-150 of the Federal Communications Commission.

Certain regulations found on this page formerly appeared on Original Page 101.

CENTRALIZED EQUAL ACCESS SERVICE

6. Switched Access Service (Cont'd)

6.1 General (Cont'd)

6.1.3 Rate Categories (Cont'd)

(A) Switched Transport (Cont'd)

The Switched Transport rate element also provides the centralized switching functions necessary to complete the transmission of Switched Access communications to and from Iowa Network's central access tandem.

International dialing may be provided as a capability associated with Feature Group D. International dialing provides the capability of switching international calls with service prefix and address codes having more digits than are capable of being switched through standard FGD equipment.

Switched Transport is assessed on a per access minute basis at the rate set forth in 6.8.1 following.

(1) Interface Groups

One Interface Group is provided for terminating the Switched Transport at the customer's point of interconnection: Interface Group 6. Where transmission facilities permit, the individual transmission path between Iowa Network's central access tandem and another Iowa Network premises listed in Section 8 following may at the option of the customer be provided with optional features as set forth in (2)(a) and (b) following.

(X) Issued under authority of Special Permission Number 89-150 of the Federal Communications Commission.

Certain regulations previously found on this page can now be found on 1st Revised Page 100.

6. Switched Access Service (Cont'd)

6.1 General (Cont'd)

6.1.3 Rate Categories (Cont'd)

(A) Switched Transport (Cont'd)

(1) Interface Groups (Cont'd)

Interface Group 6 is provided with Type A or B Transmission Specifications depending on the Feature Group. All Interface Groups are provided with Data Transmission Parameters.

Only certain interfaces are available at the customer's point of interconnection. The various interfaces which are available are set forth in (j) following and Section 15.1.11.

(a) Reserved for Future Use

(b) Reserved for Future Use

(c) Reserved for Future Use

(d) Reserved for Future Use

(e) Reserved for Future Use

6. Switched Access Service (Cont'd)

6.1 General (Cont'd)

6.1.3 Rate Categories (Cont'd)

(A) Switched Transport (Cont'd)

(1) Interface Groups (Cont'd)

(f) Interface Group 6

Interface Group 6 provides DS1 level digital transmission at the customer's point of interconnection. The interface is capable of transmitting electrical signals at a nominal 1.544 Mbps, with the capability to channelize up to twenty-four (24) voice frequency transmission paths. When analog switching utilizing analog terminations is provided, Iowa Network will provide multiplex and channel bank equipment to derive twenty-four (24) transmission paths of a frequency bandwidth of approximately three hundred (300) to three thousand (3000) Hz. When digital switching or analog switching with digital carrier terminations is provided, Iowa Network will provide a DS1 signal in D3/D4 format.

The interface is provided with individual transmission path bit stream supervisory signaling.

(g) Reserved for Future Use

(h) Reserved for Future Use

(i) Reserved for Future Use

CENTRALIZED EQUAL ACCESS SERVICE

6. Switched Access Service (Cont'd)

6.1 General (Cont'd)

6.1.3 Rate Categories (Cont'd)

(A) Switched Transport (Cont'd)

(1) Interface Groups (Cont'd)

(j) Available Interface Codes

Following is a matrix showing which interface codes are available as a function of the switch supervisory signaling and Feature Group. For explanations of these codes, see the Glossary of Channel Interface Codes in 15.3.1 following.

Interface Group	Switch Supervisory Signaling	Interface Code	Feature Group B	Feature Group D
6	RV, EA, EB, EC	4DS9-15	X	X
	RV, EA, EB, EC	4DS9-15L	X	X

(B) Nonchargeable Optional Features (T)

Where facilities permit, Iowa Network will, at the option of the customer, provide the following nonchargeable optional features in association with Switched Transport. (C)

(1) Supervisory Signaling (T)

Where the transmission parameters permit, and where signaling conversion is required by the customer to meet its signaling capability, the customer may order an optional supervisory signaling arrangement for each transmission path provided as follows:

CENTRALIZED EQUAL ACCESS SERVICE

6. Switched Access Service (Cont'd)

6.1 General (Cont'd)

6.1.3 Rate Categories (Cont'd)

(B) Nonchargeable Optional Features (Cont'd) (T)

(1) Supervisory Signaling (Cont'd) (T)

Interface Group 6 may, at the option of the customer, be provided with individual transmission path SF supervisory signaling where such signaling is available in Iowa Network's central access tandem. Generally, such signaling is available only where Iowa Network's central access tandem provides an analog, i.e., non-digital, interface and a portion of the facility provided by the customer between Iowa Network's central access tandem and the customer's premises is analog.

(2) Customer Specified Entry Switch Receive Level (T)

This feature allows the customer to specify the receive transmission level at Iowa Network's central access tandem. The range of transmission levels, which may be specified, is described in Technical Reference TR-NPL-000334. This feature is available for Feature Group B.

CENTRALIZED EQUAL ACCESS SERVICE

6. Switched Access Service (Cont'd)

6.1 General (Cont'd)

6.1.3 Rate Categories (Cont'd)

(B) Nonchargeable Optional Features (Cont'd)

(3) Joint Provision of Common Channel Signaling Access (CCSA) (N)

There are no recurring charges for this feature. If the customer requests Iowa Network to reconfigure FGD trunks with inband signaling to provide FGD service with the CCSA option, the request will be treated as a discontinuance of existing service and the installation of a new service and the installation charges set forth in 6.8.1(C)(1) following will apply on a per SNAC basis. (N)

Certain regulation previously found on this page can now be found on 1st Revised Page 105.2.

CENTRALIZED EQUAL ACCESS SERVICE

6. Switched Access Service (Cont'd)

6.1 General (Cont'd)

6.1.3 Rate Categories (Cont'd)

(C) Chargeable Optional Features

Where facilities permit, Iowa Network will, at the option of the customer, provide the following chargeable optional features. (M)

(1) Interim NXX Translation

The Interim NXX Translation rate element provides for customer identification when calls are directed by end users in the 1+SAC+NXX+XXXX (e.g., 1-800-NXX-XXXX) format. The NXX codes are assigned to specific customers in conformance with the North American Numbering Plan (NANP). NXX code assignment(s) will be made by the Bellcore NANP Coordinator. Iowa Network will use the NXX code to identify the customer to whose point of termination the traffic is to be delivered (i.e., at appropriately equipped electronic end offices, access tandems or through contracted arrangements with other parties). It is then the responsibility of the customer to do any further translation the customer deems necessary to route the call. Customer assigned NXX codes, which have not been ordered, will be blocked. A non-recurring charge, as set forth in 6.8.1 (C) following is associated with this optional feature. (M)

Certain regulations previously found on this page can now be found on Original Page 105.3.

Certain regulations on this page formerly appeared on Original Page 105.1.

6. Switched Access Service (Cont'd)

6.1 General (Cont'd)

6.1.3 Rate Categories (Cont'd)

(C) Chargeable Optional Features (Cont'd) (M)

(1) Interim NXX Translation (Cont'd)

The nonrecurring charge is assessed only by a company that provides the final translation function. A company is said to have provided the final Interim NXX Translation when its translation identifies the customer's traffic and this traffic is then delivered to the customer's point of termination without any further translation. The description and application of this charge is as set forth in 6.7.1(B) following. (M)

Certain regulations on this page formerly appeared on Original Page 105.2.

6. Switched Access Service (Cont'd)

6.1 General (Cont'd)

6.1.4 Design Layout Report

At the request of the customer, Iowa Network will provide to the customer the makeup of the facilities and services provided. This information will be provided in the form of a Design Layout Report. The Design Layout Report will be provided to the customer at no charge, and will be reissued or updated whenever these facilities are materially changed.

6.1.5 Acceptance Testing

At no additional charge, Iowa Network will, at the customer's request, cooperatively test, at the time service is initiated, the following parameters: loss, C-notched noise, C-message noise, 3-tone slope, d.c. continuity and operational signaling.

6.1.6 Routine Testing

At no additional charge, Iowa Network will, at the customer's request, test after installation on an automatic or manual basis, 1004 Hz loss, C-message noise and Balance (Return Loss).

In the case of automatic testing, the customer shall provide remote office test lines and 105 test lines with associated responders or their functional equivalent.

The frequency of these tests will be that which is mutually agreed upon by the customer and Iowa Network, but shall consist of not less than quarterly 1004 Hz Loss and C-message noise tests and an annual Balance test. Trunk test failures requiring customer participation for trouble resolution will be provided to the customer on an as-occurs basis.

6. Switched Access Service (Cont'd)

6.1 General (Cont'd)

6.1.5 Routine Testing (Cont'd)

Additional tests may be ordered as set forth in 13.3.4 following. Charges for these additional tests are set forth in 13.3.4 (C) following.

6.1.7 Ordering Options and Conditions

Switched Access Service is ordered under the Access Order provisions set forth in Section 5 preceding. Also, included in that section are other charges, which may be associated with ordering Switched Access Service (e.g., Service Date Change Charges, Cancellation Charges, etc.).

CENTRALIZED EQUAL ACCESS SERVICE

6. Switched Access Service (Cont'd)

6.2 Provision and Description of Switched Access Service Feature Groups

Switched Access Service is provided in two different Feature Group arrangements. The provision of each Feature Group requires Switched Transport facilities. Interim NXX Translation is provided in conjunction with Feature Group D. Common Channel Signaling Access is also available in conjunction with FGD. (N) (N)

There are two (2) specific transmission performances (i.e., Types A and B) that have been identified for the provision of Feature Groups. The parameters for the transmission specifications are set forth in 6.4.1 following and Section 15.2.1.

Feature Groups are arranged with Centralized Equal Access Service for two-way calling. Originating calling permits the delivery of calls from Telephone Exchange Service locations to the customer premises. Terminating calling permits the delivery of calls from the customer premises to Telephone Exchange Service locations. Two-way calling permits the delivery of calls in both directions, but not simultaneously.

Following are detailed descriptions of each of the available Feature Groups. Each Feature Group is described in terms of its specific physical characteristics and calling patterns, the transmission specifications with which it is provided, and the standard testing capabilities.

6.2.1 Reserved for Future Use

6.2.2 Feature Group B (FGB)

(A) Description

(1) FGB is provided as trunk side switching through the use of access tandem switch trunk equipment at Iowa Network's central access tandem. The switch trunk equipment is provided with wink start start-pulsing signals and answer and disconnect supervisory signaling. (Z)

6. Switched Access Service (Cont'd)

6.2 Provision and Description of Switched Access Service Feature Groups (Cont'd)

6.2.6 Feature Group B (FGB) (Cont'd)

(A) Description (Cont'd)

(2) FGB switching is provided with multi-frequency address signaling in both the originating and terminating directions. Any other address signaling in the originating direction, if required by the customer, must be provided by the customer's end user using inband tone signaling techniques. Such inband tone address signals will not be regenerated by Iowa Network and will be subject to the ordinary transmission capabilities of the Switched Transport provided.

(3) The access code for FGB switching is a uniform access code. The form of the uniform access code is 950-0XXX or 950-1XXX for customers. These uniform access codes will be the assigned access numbers of all FGB Switched Access Service provided to the customer by Iowa Network.

(4) FGB switching, when used in the terminating direction, may be used to access valid NXXs in the LATA, time or weather announcement services of a Routing Exchange Carrier set forth in Section 9 following community information services of an information service provider and other customers' services (by dialing the appropriate digits). Only those valid NXX codes serviced by end office switches subtending Iowa Network's access tandem may be accessed.

6. Switched Access Service (Cont'd)

6.2 Provision and Description of Switched Access Service Feature Groups (Cont'd)

6.2.2 Feature Group B (FGB) (Cont'd)

(A) Description (Cont'd)

(4) (Cont'd)

The customer will also be billed additional non-access charges for calls to certain community information services for which rates are applicable, e.g., 976 (DIAL-IT) Network Service. Additionally, non-access charges will also be billed for calls from a FGB trunk to another customer's service in accordance with that customer's applicable service rate when Iowa Network performs the billing function for that customer.

Calls in the terminating direction will not be completed to 950-0XXX or 950-1XXX access codes, local operator assistance (0- and 0+), Directory Assistance (411) or 10XXX access codes. FGB may not be switched, in the terminating direction, to Switched Access Service Feature Groups B, C and D.

The customer will also be billed access charges by Routing Exchange Carriers and other Exchange Telephone Companies for the provision of access service in their operating territories between an Iowa Network premises listed in Section 8 following and the end offices served by Iowa Network's central access tandem. In addition, the customer may also be billed access charges by the Routing Exchange Carriers or other

6. Switched Access Service (Cont'd)

6.2 Provision and Description of Switched Access Service Feature Groups (Cont'd)

6.2.2 Feature Group B (FGB) (Cont'd)

(A) Description (Cont'd)

(4) (Cont'd)

Exchange Telephone Companies for the provision of access services between the customer's premises and an Iowa Network premises set forth in Section 8 following.

(B) Transmission Specifications

FGB is provided with Type B Transmission Specifications. The specifications for the associated parameters are guaranteed to the end office when routed directly or to the first point of switching when routed via an access tandem. Type DB Data Transmission parameters are provided with FGB to Iowa Network's central access tandem.

(C) Testing Capabilities

FGB is provided, in the terminating direction where equipment is available, with seven digit access to balance (100 type) test line, milliwat (102 type) test line, nonsynchronous or synchronous test line, automatic transmission measuring (105 type) test line, loop around test line, short circuit test line and open circuit test line. In addition to the test described in 6.1.5 preceding which are included with the installation of service, Additional Cooperative Acceptance Testing and Additional Automatic Testing will be provided as set forth in 13.3.4 following.

CENTRALIZED EQUAL ACCESS SERVICE

6. Switched Access Service (Cont'd)

6.2 Provision and Description of Switched Access Service Feature Groups (Cont'd)

6.2.3 Reserved for Future Use (C)

(D)

(D)

CENTRALIZED EQUAL ACCESS SERVICE

6. Switched Access Service (Cont'd)

6.2 Provision and Description of Switched Access Service Feature Groups (Cont'd)

6.2.3 Reserved for Future Use (Cont'd) (C)

(D)

(D)

CENTRALIZED EQUAL ACCESS SERVICE

6. Switched Access Service (Cont'd)

6.2 Provision and Description of Switched Access Service Feature Groups (Cont'd)

6.2.3 Reserved for Future Use (Cont'd) (C)

(D)

(D)

CENTRALIZED EQUAL ACCESS SERVICE

6. Switched Access Service (Cont'd)

6.2 Provision and Description of Switched Access Service Feature Groups (Cont'd)

6.2.3 Reserved for Future Use (Cont'd) (C)

(D)

(D)

6.2.4 Feature Group D (FGD)

(A) Description

(1) FGD is provided at Iowa Network's central access tandem.

CENTRALIZED EQUAL ACCESS SERVICE

6. Switched Access Service (Cont'd)

6.2 Provision and Description of Switched Access Service Feature Groups (Cont'd)

6.2.4 Feature Group D (FGD) (Cont'd)

(A) Description (Cont'd)

(2) FGD is provided as trunk side switching through the use of access tandem switch trunk equipment at Iowa Network's central access tandem. The switch trunk equipment is provided with wink start start-pulsing signals and answer and disconnect supervisory signaling. SS7 signaling is provided instead of multifrequency address signaling when the CCSA optional feature is ordered. (N) | (N)

(3) FGD switching is provided with multi-frequency address or SS7 signaling. Up to twelve (12) digits of the called party number dialed by the customer's end user using dual tone multifrequency or dial pulse address signals will be provided by Iowa Network equipment to the customer's point of interconnection. Such address signals will be subject to the ordinary transmission capabilities of the Switched Transport provided. (C)

(4) FGD switching, when used in the terminating direction, may be used to access valid NXXs in the LATA, time or weather announcement services of a Routing Exchange Carrier, community information services of an information service provider, and other customers' services (by dialing the appropriate codes) when such services can be reached using valid NXX codes. Only those valid NXX codes served by end office switches subtending Iowa Network's central access tandem may be accessed.

6. Switched Access Service (Cont'd)

6.2 Provision and Description of Switched Access Service Feature Groups (Cont'd)

6.2.4 Feature Group D (FGD) (Cont'd)

(A) Description (Cont'd)

(4) (Cont'd)

The customer will also be billed additional non-access charges for calls to certain community information services, for which rates are applicable, e.g., 976 (DIAL-IT) Network Services. Additionally, non-access charges will also be billed for calls from a FGD trunk to another customer's service in accordance with that customer's applicable service rates when Iowa Network performs the billing function for that customer.

Calls in the terminating direction will not be completed to 950-0XXX or 950-1XXX access codes, local operator assistance (0- and 0+), and 10XXX access codes. FGD may not be switched, in the terminating direction, to Switched Access Service Feature Groups B, C or D.

The customer will also be billed access charges by Routing Exchange Carriers and other Exchange Telephone Companies for the provision of access service in their operating territories between an Iowa Network premises listed in Section 8 following and the end offices served by Iowa Network's central access tandem. In addition, the customer may also be billed access charges by the Routing Exchange Carriers or other Exchange Telephone Companies for the provision of access services between the customer's premises and an Iowa

CENTRALIZED EQUAL ACCESS SERVICE

6. Switched Access Service (Cont'd)

6.2 Provision and Description of Switched Access Service Feature Groups (Cont'd)

6.2.4 Feature Group D (FGD) (Cont'd)

(A) Description (Cont'd)

(4) (Cont'd)

Network premises set forth in Section 8 following.

(5) FGD switching will be arranged to accept calls from telephone exchange service locations without the need for dialing the 10XXX uniform access code. Each telephone exchange service line may be marked with a code to identify which 10XXX code its calls will be directed to for interLATA and intraLATA service. The access code for FGD switching is a uniform access code of the form 10XXX unless a Routing Exchange Carrier's end office switch is unable to provide a uniform 10XXX code. A single access code will be the assigned number of all FGD access provided to the customer by Iowa Network. No access code is required for calls to a customer over FGD Switched Access Service if the end user's telephone exchange service is arranged for presubscription to that customer. (N) (X)

Where no access code is required, the number dialed by the end user shall be a seven (7) to ten (10) digit number, where appropriate, for calls in the North American Numbering Plan (NANP). (N) (X)

(X) Issued under authority of Special Permission Number 89-150 of the Federal Communications Commission.

Certain regulations previously found on this page can now be found on Original Page 118.1.

CENTRALIZED EQUAL ACCESS SERVICE

6. Switched Access Service (Cont'd)

6.2 Provision and Description of Switched Access Service Feature Groups (Cont'd)

6.2.4 Feature Group D (FGD) (Cont'd)

(A) Description (Cont'd)

(5) (Cont'd)

The form of the numbers dialed by the end user is NXX-XXXX, 0 or 1 + NXX- XXXX, NPA+NXX-XXXX, 0 or 1+ NPA + NXX+ XXXX, and for International Direct Distance Dialing (IDDD), 01 + CC + NN or 011 + CC + NN. (M) (X) (M)

The end offices of the Routing Exchange Carriers that are listed below are unable to provide a uniform 10XXX code. (C)

Company	Exchange
Grand Mound Telephone Association	Grand Mound, IA
Minerva Valley Telephone Company, Inc.	Clemens, IA Zearing, IA
*Farmers Mutual Telephone Company	Urbana, IA
Cascade Telephone Company	Cascade, IA

(C) (X)

* This end office will be capable of providing a uniform 10XXX code on or before May 1, 1989.

(X) Issued under authority of Special Permission Number 89-150 of the Federal Communications Commission.

Certain regulations found on this page formerly appeared on Original Page 118.

CENTRALIZED EQUAL ACCESS SERVICE

6. Switched Access Service (Cont'd)

6.2 Provision and Description of Switched Access Service Feature Groups (Cont'd)

6.2.4 Feature Group D (FGD) (Cont'd)

(A) Description (Cont'd)

(5) (Cont'd)

(D) (X)
| |
| |
| |
| |
| |
| |
(D) (X)

When the 10XXX code is used, FGD switching also provides for dialing the digit 0 (zero) for access to the customer's operator, or the end-of-dialing digit (#) for cut-through access to the customer's premises, or 911 for access to the emergency reporting service of a Routing Exchange Carrier.

(6) When a customer has had FGB access and subsequently replaces the FGB access with FGD access, at the customer's request and where facilities permit, Iowa Network will, for a period of ninety (90) days , direct calls dialed by the customer's end users using the customer's previous FGB access code to the customer's FGD access service. The customer must be prepared to handle normally dialed FGD calls as well as calls dialed with the FGB access code which require the customer to receive additional address signaling from the end user. Such calls will be rated as FGD.

(X) Issued under authority of Special Permission Number 89-150 of the Federal Communications Commission.

CENTRALIZED EQUAL ACCESS SERVICE

6. Switched Access Service (Cont'd)

6.2 Provision and Description of Switched Access Service Feature Groups (Cont'd)

6.2.4 Feature Group D (FGD) (Cont'd)

(A) Description (Cont'd)

(7) Unless prohibited by technical limitations, the customer's Interim NXX Translation traffic may, at the option of the customer, be combined in the same trunk group arrangement with the customer's non-Interim NXX Translation traffic. When required by technical limitations, or at the request of the customer, a separate trunk group will be established for Interim NXX translation traffic. (N) (N)

(B) Transmission Performance

FGD is provided with Type A Transmission Specifications:

Type DA Data Transmission Parameters are provided for the transmission path between the customer's premises and the access tandem and between the access tandem and the end office.

Certain regulations previously found on this page can now be found on Original Page 120.1.

CENTRALIZED EQUAL ACCESS SERVICE

6. Switched Access Service (Cont'd)

6.2 Provision and Description of Switched Access Service Feature Groups (Cont'd)

6.2.4 Feature Group D (FGD) (Cont'd)

(C) Testing Capabilities

FGD is provided, in the terminating direction where equipment is available, with seven (7) digit access to balance (100 type) test line, milliwatt (102 type) test line, nonsynchronous or synchronous test line, automatic transmission measuring (105 type) test line, loop around test line, short circuit test line and open circuit test line. In addition to the tests described in 6.1.5 preceding which are included with the installation of service, Additional Cooperative Acceptance Testing and Additional Automatic Testing will be provided for FGD as set forth in 13.3.4 following.

When FGD is ordered with the CCSA option, network compatibility and other operational tests will be performed cooperatively with Iowa Network, ONVOY, and the interexchange carrier at locations, dates, and times as specified by Iowa Network in consultation with the interexchange carrier. These tests as specified in TR-TSV-000905 must be successfully completed in order to receive the CCSA option. (C)

6.3 Reserved for Future Use

6. Switched Access Service (Cont'd)

6.4 Transmission Specifications

Each Switched Access Service transmission path is provided with standard transmission specifications. There are two different standard specifications (Types A and B). The standard for the transmission path is dependent on the Feature Group. The available transmission specifications are set forth in 6.4.1 and 15.2.1 following. Data Transmission Parameters are also provided with the Switched Access Service transmission path. Iowa Network will, upon notification by the customer that the data parameters set forth in 6.4.2(A), or 6.4.2(B) or 15.2.2 are not being met, conduct tests independently or in cooperation with the customer, and take any necessary action to insure that the data parameters are met.

All service configurations operated by Iowa Network after the effective date of this tariff will conform to the transmission specifications contained in this tariff.

The transmission specifications contained in this Section are immediate action limits. Acceptance limits are set forth in Technical Reference TR-NPL-000334. This Technical Reference also provides the basis for determining Switched Access Service maintenance limits.

6.4.1 Standard Transmission Specifications

Following are descriptions of the two Standard Transmission Specifications available with Switched Access Service Feature Groups. The specific applications in terms of the Feature Groups and Interface Group with which the Feature Group Standard Transmission Performances are provided are set forth in 6.2.2(B) and 6.2.4(B) preceding. (C)

(A) Type A Transmission Specifications

Type A Transmission Specifications are provided with the following parameters:

6. Switched Access Service (Cont'd)

6.4 Transmission Specifications (Cont'd)

6.4.1 Standard Transmission Specifications (Cont'd)

(A) Type A Transmission Specifications (Cont'd)

(1) Loss Deviation

The maximum Loss Deviation of the 1004 Hz loss relative to the Expected Measured Loss (EML) is ±2.0 dB.

(2) Attenuation Distortion

The maximum Attenuation Distortion in the 404 to 2804 Hz frequency band relative to the loss at 1004 Hz is -1.0 dB to +3.0 dB.

(3) C-Message Noise

The maximum C-Message Noise for the transmission path at the route miles listed is less than or equal to:

Route Miles	C-Message Noise
less than 50	32 dBrnCO
51 to 100	34 dBrnCO
101 to 200	37 dBrnCO
201 to 400	40 dBrnCO
401 to 1000	42 dBrnCO

(4) C-Notched Noise

The maximum C-Notched Noise, utilizing a -16 dBm0 holding tone is less than or equal to 45 dBrnCO.

6. Switched Access Service (Cont'd)

6.4 Transmission Specifications (Cont'd)

6.4.1 Standard Transmission Specifications (Cont'd)

(A) Type A Transmission Specifications (Cont'd)

(5) Echo Control

Echo Control, identified as Equal Level Echo Path Loss, and expressed as Echo Return Loss and Singing Return Loss is equal to or greater than the following:

Echo Return Loss	Singing Return Loss
16 dB	11 dB

(B) Type B Transmission Specifications

Type B Transmission Specifications are provided with the following parameters:

(1) Loss Deviation

The maximum Loss Deviation of the1004 Hz loss relative to the Expected Measured Loss (EML) is ± 2.5 dB.

(2) Attenuation Distortion

The maximum Attenuation Distortion in the 404 to 2804 Hz frequency band relative to loss at 1004 Hz is -2.0 dB to +4.0 dB.

(3) C-Message Noise

The maximum C-Message Noise for the transmission path at the route miles listed is less than or equal to:

CENTRALIZED EQUAL ACCESS SERVICE

6. Switched Access Service (Cont'd)

6.4 Transmission Specifications (Cont'd)

6.4.1 Standard Transmission Specifications (Cont'd)

(B) Type B Transmission Specifications (Cont'd)

(3) C-Message Noise (Cont'd)

	C-Message Noise*	
Route Miles	Type B1	Type B2
less than 50	32 dBrnCO	35 dBrnCO
51 to 100	33 dBrnCO	37 dBrnCO
101 to 200	35 dBrnCO	40 dBrnCO
201 to 400	37 dBrnCO	43 dBrnCO
401 to 1000	39 dBrnCO	45 dBrnCO

(4) C-Notched Noise

The maximum C-Notched Noise, utilizing a -16 dBmO holding tone is less than or equal to 47 dBrnCO.

(5) Echo Control

Echo Control is identified as Impedance Balance for FGB and Equal Level Echo Path Loss for FGD, and expressed as Echo Return Loss (ERL) and Singing Return Loss (SRL). The ERL and SRL also differ by Feature Group. They are greater than or equal to the following: (C)

* For Feature Group D only, Type B2 will be provided. For Feature Group B, Type B1 and B2 will be provided as set forth in Technical Reference TR-NPL-000334. (C)

CENTRALIZED EQUAL ACCESS SERVICE

6. Switched Access Service (Cont'd)

6.4 Transmission Specifications (Cont'd)

6.4.1 Standard Transmission Specifications (Cont'd)

(B) Type B Transmission Specifications (Cont'd)

(5) Echo Control (Cont'd)

	Echo Return Loss	Singing Return Loss
o For FGB access	8 dB	4 dB

(D)
|
|
|
|
|
|
(D)

(C) Reserved for Future Use

6.4.2 Data Transmission Parameters

Two types of Data Transmission Parameters, i.e., Type DA and Type DB, are provided for the Feature Group arrangements. The specific applications in terms of the Feature Groups with which they are provided are set forth in 6.2.2(B) and 6.2.4(B) preceding. (C)
Following are descriptions of each.

(A) Data Transmission Parameters Type DA

(1) Signal to C-Notched Noise Ratio

The Signal to C-Notched Noise Ratio is equal to or greater than 33 dB.

6. Switched Access Service (Cont'd)

6.4 Transmission Specifications (Cont'd)

6.4.2 Data Transmission Parameters (Cont'd)

(A) Data Transmission Parameters Type DA (Cont'd)

(2) Envelope Delay Distortion

The maximum Envelope Delay Distortion for the frequency bands and route miles specified is:

604 to 2804 Hz	
less than 50 route miles	500 microseconds
equal to or greater than 50 route miles	900 microseconds

1004 to 2404 Hz	
less than 50 route miles	200 microseconds
equal to or greater than 50 route miles	400 microseconds

(3) Impulse Noise Counts

The Impulse Noise Counts exceeding a 65 dBrnCO threshold in fifteen (15) minutes is no more than fifteen (15) counts.

(4) Intermodulation Distortion

The Second Order (R2) and Third Order (R3) Intermodulation Distortion products are equal to or greater than:

Second Order (R2)	33 dB
Third Order (R3)	37 dB

6. Switched Access Service (Cont'd)

6.4 Transmission Specifications (Cont'd)

6.4.2 Data Transmission Parameters (Cont'd)

(A) Data Transmission Parameters Type DA (Cont'd)

(5) Phase Jitter

The Phase Jitter over the 4 - 300 Hz frequency band is less than or equal to 5 degrees peak-to-peak.

(6) Frequency Shift

The maximum Frequency Shift does not exceed –2 to +2 Hz.

(B) Data Transmission Parameters Type DB

(1) Signal to C-Notched Noise Ratio

The signal to C-Notched noise Ratio is equal to or greater than 30 dB.

(2) Envelope Delay Distortion

The maximum Envelope Delay Distortion for the frequency bands and route miles specified is:

604 to 2804 Hz	
less than 50 route miles	800 microseconds
equal to or greater than 50 route miles	1000 microseconds

1004 to 2404 Hz	
less than 50 route miles	320 microseconds
equal to or greater than 50 route miles	500 microseconds

6. Switched Access Service (Cont'd)

6.4 Transmission Specifications (Cont'd)

6.4.2 Data Transmission Parameters (Cont'd)

(B) Data Transmission Parameters Type DB (Cont'd)

(3) Impulse Noise Counts

The Impulse Noise Counts exceeding a 67 dBrnCO threshold in fifteen (15) minutes is no more than fifteen (15) counts.

(4) Intermodulation Distortion

The Second Order (R2) and Third Order (R3) Intermodulation Distortion products are equal to or greater than:

Second Order (R2)	31 dB
Third Order (R3)	34 dB

(5) Phase Jitter

The Phase Jitter over the 4 - 300 Hz frequency band is less than or equal to 7 degrees peak-to-peak.

(6) Frequency Shift

The maximum Frequency Shift does not exceed –2 to +2 Hz.

CENTRALIZED EQUAL ACCESS SERVICE

6. Switched Access Service (Cont'd)

6.5 Obligations of Iowa Network

In addition to the obligations of Iowa Network set forth in Section 2 preceding, Iowa Network has certain other obligations pertaining only to the provision of Switched Access Service. These obligations are as follows:

6.5.1 Network Management

Iowa Network will administer its network to ensure the provision of acceptable service levels to all telecommunications users of Iowa Network's services. Iowa Network maintains the right to apply protective controls, i.e., those actions, such as call gapping, which selectively cancel the completion of traffic, over any traffic carried over its network, including that associated with a customer's Switched Access Service. Generally, such protective measures would only be taken as a result of occurrences such as failure or overload of Iowa Network or customer facilities, natural disasters, mass calling or national security demands. In the event that the protective controls applied by Iowa Network result in the complete loss of service by the customer, the customer will be granted a Credit Allowance for Service Interruption as set forth in 2.4.4(B)(1) preceding.

6.5.2 Design and Traffic Routing of Switched Access Service

When a customer's point of interconnection is located at Iowa Network's central access tandem, Iowa Network shall design and determine the routing of Switched Access Service and the selection of facilities from Iowa Network's central access tandem to the end offices of the Routing Exchange Carriers serving the customer. When a customer's point of interconnection is located at an Iowa network premises listed in Section 8 following other than Des Moines, Iowa Network shall design and determine the routing of Switched Access Service and the selection of (C) (X) | | | | (C) (X) (C) (X) | | | | (C) (X)

(X) Issued under authority of Special Permission Number 89-150 of the Federal Communications Commission.

CENTRALIZED EQUAL ACCESS SERVICE

6. Switched Access Service (Cont'd)

6.5 Obligations of Iowa Network (Cont'd)

6.5.2 Design and Traffic Routing of Switched Access Service (Cont'd)

facilities from that Iowa Network premises to Iowa Network's central access tandem and the end offices of the Routing Exchange Carriers serving the customer. For Feature Groups B and D, Iowa Network's central access tandem will always be the first point switching. (C)

CENTRALIZED EQUAL ACCESS SERVICE

6. Switched Access Service (Cont'd)

6.5 Obligations of Iowa Network (Cont'd)

6.5.2 Design and Traffic Routing of Switched Access Service (Cont'd)

Iowa Network shall also decide if capacity is to be provided by originating only, terminating only, or two-way trunk groups. (C) (X)

Finally, Iowa Network will decide whether trunk side access will be provided through the use of two-wire or four-wire trunk terminating equipment. Selection of facilities and equipment and traffic routing of the service are based on standard engineering methods, available facilities and equipment, and the Iowa Network traffic routing plans.

If the customer desires routing or directionality different from that determined by Iowa Network, Iowa Network will work cooperatively with the customer in determining the directionality of the service.

6.5.3 Provision of Service Performance Data

Subject to availability, end-to-end service performance data available to Iowa Network through its own service evaluation routines, may also be made available to the customer based on previously arranged intervals and format. These data provide information on overall end-to-end call completion and noncompletion performance, e.g., customer equipment blockage, failure results and transmission performance. These data do not include service performance data, which are provided under other tariff sections, e.g., testing service results. If data are to be provided in other than paper format, the charges for such exchange will be determined on an individual case basis.

(X) Issued under authority of Special Permission Number 89-150 of the Federal Communications Commission.

CENTRALIZED EQUAL ACCESS SERVICE

6. Switched Access Service (Cont'd)

6.5 Obligations of Iowa Network (Cont'd)

6.5.4 Trunk Group Measurement Reports

Subject to availability, Iowa Network will make available trunk group data in the form of usage in CCS, peg count and overflow, to the customer based on previously agreed to intervals.

6.5.5 Determination of Number of Transmission Paths

Iowa Network will determine the number of Switched Access Service transmission paths to be provided for the Switched Access Feature Groups ordered. A transmission path is a derived communication path of a frequency bandwidth of approximately 300 Hz to 3000 Hz provided over a high speed digital facility between a customer's point of interconnection listed in Section 8 following and Iowa Network's central access tandem. The number of transmission paths will be developed using the total busy hour minutes of capacity by type (as described in 6.1.1(F) preceding) for each Feature Group ordered to Iowa Network's central access tandem. The total busy hour minutes of capacity by type for the Feature Group will be converted to transmission paths using standard traffic engineering methods. For Feature Group B between the customer's premises and the customer's point of interconnection set forth in Section 8 following ordered from an Exchange Telephone Company on a per trunk basis, the customer specifies the number of transmission paths in the order for service to the Exchange Telephone Company.

6.5.6 Reserved for Future Use

CENTRALIZED EQUAL ACCESS SERVICE

6. Switched Access Service (Cont'd)

6.5 Obligations of Iowa Network (Cont'd)

6.5.7 Design Blocking Probability

Iowa Network will design the facilities used in the provision of Switched Access Service to meet the blocking probability criteria as set forth in (A) through (C) following.

(A) For Feature Group B, no design blocking criteria apply.

(B) For Feature Group D, the design blocking objective will be no greater than one percent (1%) between the customer's point of interconnection set forth in Section 8 following and Iowa Network's central access tandem. Standard traffic engineering methods as set forth in reference document Telecommunications Transmission Engineering -Volume 3 – Networks and Services (Chapters 6-7) will be used by Iowa Network to determine the number of transmission paths required to achieve this level of blocking. (C)

CENTRALIZED EQUAL ACCESS SERVICE

6. Switched Access Service (Cont'd)

6.5 Obligations of Iowa Network (Cont'd)

6.5.7 Design Blocking Probability (Cont'd)

(C) Iowa Network will perform routine measurement functions to assure that an adequate number of transmission paths are in service. Iowa Network will recommend that additional busy hour minutes of capacity be ordered by the customer when additional paths are required to reduce the measured blocking to the design blocking level. For the capacity ordered, the design blocking objective is assumed to have been met if the routine measurements show that the measured blocking does not exceed the threshold listed in the following table.

Number of Transmission Paths Per Trunk Group	Measured Blocking Thresholds in the Time Consistent Busy for the Number of Average Business Day Measurements Per Trunk Group			
	Measurements			
	15-20	11-14	7-10	3-6
2	.045	.055	.060	.095
3	.035	.040	.045	.060
4	.035	.040	.045	.055
5-6	.025	.035	.040	.045
7 or more	.020	.025	.030	.040

CENTRALIZED EQUAL ACCESS SERVICE

6. Switched Access Service (Cont'd)

6.6 Obligations of the Customer

In addition to the obligations of the customer set forth in Section 2 preceding, the customer has certain specific obligations pertaining to the use of Switched Access Service. These obligations are as follows:

6.6.1 Report Requirements

Customers are responsible for providing the following reports to Iowa Network when applicable.

(A) Jurisdictional Reports

When a customer orders Switched Access Service for both interstate and intrastate use, the customer is responsible for providing reports as set forth in 2.3.14 preceding. Charges will be apportioned in accordance with those reports. The method to be used for determining the interstate charges is set forth in 2.3.15 preceding.

(D) (X)
| |
| |
| |
| |
| |
| |
(D) (X)

6.6.2 Supervisory Signaling

The customer's facilities shall provide the necessary on-hook, off-hook, answer and disconnect supervision.

(X) Issued under authority of Special Permission Number 89-150 of the Federal Communications Commission.

CENTRALIZED EQUAL ACCESS SERVICE

6. Switched Access Service (Cont'd)

6.6 Obligations of the Customer (Cont'd)

6.6.3 Truck Group Measurement Reports

With the agreement of the customer, trunk group data in the form of usage in CCS, peg count and overflow for its end of all access trunk groups, where technologically feasible, will be made available to Iowa Network. These data will be used to monitor trunk group utilization and service performance and will be based on previously arranged intervals and format.

6.6.4 Design of Switched Access Services

When a customer orders Switched Access Service, the customer shall take reasonable steps to assure that sufficient access services have been ordered to handle its traffic.

6.6.5 Short Duration Mass Calling Requirements (N)

When a customer offers service for which a substantial call volume is expected during a short period of time (e.g., 900 service media stimulated events), the customer must notify Iowa Network and the affected Routing Exchange Carriers listed in Section 9 following at least 48 hours in advance of each peak period. Notification should include the nature, time, duration, and frequency of the event, an estimated call volume, and the telephone number(s) to be used.

On the basis of the information provided, Iowa Network may invoke network management controls, (e.g., call gapping and code blocking) to reduce the probability of excessive network congestion. Iowa Network will work cooperatively with the customer to determine the appropriate level of such control. (N)

CENTRALIZED EQUAL ACCESS SERVICE

6. Switched Access Service (Cont'd)

6.7 Rate Regulations

This section contains the specific regulations governing the rates and charges that apply for Switched Access Service.

6.7.1 Description and Application of Rates and Charges

There are two types of rates and charges that apply to Switched Access Service. These are usage rates and nonrecurring charges.

(A) Usage Rates

Usage rates are rates that apply only when a specific rate element is used. These rates are applied on a per access minute basis. Usage rates are accumulated over a monthly period.

(B) Nonrecurring Charges

Nonrecurring charges are one-time charges that apply for specific work activity (i.e. installation or change to an existing service). The types of nonrecurring charges that apply for Switched Access Service are installation of service, Interim NXX Translation optional feature, and service rearrangements. (C)

(1) Installation of Service (N)

Nonrecurring charges apply to each Switched Access Service installed. For FGB and FGD, which are ordered on a busy hour minutes of capacity basis, the charge is applied on a per trunk basis but the charge applies only when the capacity ordered requires the installation or activation of an additional trunk(s) which is uniquely identified for the sole use of the ordering customer. (N)

Certain regulations previously found on this page can now be found on 1st Revised Page 136.1.

CENTRALIZED EQUAL ACCESS SERVICE

6. Switched Access Service (Cont'd)

6.7 Rate Regulations (Cont'd)

6.7.1 Description and Application of Rates and Charges (Cont'd)

(B) Nonrecurring Charges (Cont'd)

(1) Installation of Service (Cont'd)

The nonrecurring charges associated with the initial conversion of FGD trunks from multi-frequency (MF) to common channel signaling are the installation charges at 6.8.1(C) following applied on a per SNAC basis. No additional nonrecurring charges are applied to FGD trunk conversions from MF to SS7 signaling subsequent to the installation of the SNACs. (N) (N)

(2) Interim NXX Translation Optional Feature

This nonrecurring charge applies to the initial order for the installation of the Interim NXX Translation optional feature with Feature Group D Switched Access Service and for each subsequent order received to add or change NXX translation codes. This charge, if applicable, applies whether this optional feature is installed coincident with or at any time subsequent to the commencement of Switched Access Service When it is necessary for multiple telephone companies to provide the translation function, the nonrecurring charge is assessed only by the company that provides the final translation function which identifies the customer's traffic and this traffic is then delivered to the customer's point of termination without any further translation.

Certain regulations previously found on this page can now be found on Original Page 136.1.1.

CENTRALIZED EQUAL ACCESS SERVICE

6. Switched Access Service (Cont'd)

6.7 Rate Regulations (Cont'd)

6.7.1 Description and Application of Rates and Charges (Cont'd)

(B) Nonrecurring Charges (Cont'd)

(3) Service Rearrangements

All changes to existing services, other than changes involving administrative activities listed in (C) following, will be treated as a discontinuance of the existing service and an installation of a new service. The nonrecurring charge described in (1) preceding will apply for this work activity. No additional nonrecurring charges apply to FGD trunk conversions from MF to SS7 signaling subsequent to the installation of the SNACs. (M) | | | (M) (N) | | (N)

Certain regulations found on this page formerly appeared on 1st Revised Page 136.1.

CENTRALIZED EQUAL ACCESS SERVICE

6. Switched Access Service (Cont'd)

6.7 Rate Regulations (Cont'd)

6.7.1 Description and Application of Rates and Charges (Cont'd)

(C) Administrative Changes (M)

Changes, which result in the establishment of new minimum period obligations, are treated as discontinuances of existing service and installations of new service.

Administrative changes, as follow will be made without changes to minimum period obligations: (M)

- Change of customer name,
- Change of customer or customer's end user premises address when the change of address is not a result of a physical relocation of equipment,
- Change in billing data (name, address, or contact name or telephone number),
- Change of agency authorization,
- Change of customer circuit identification,
- Change of billing account number,
- Change of customer test line number,
- Change of customer or customer's end user contact name or telephone number, and
- Change of jurisdiction.

Certain regulations found on this page formerly appeared on Original Page 136.1.

6. Switched Access Service (Cont'd)

6.7 Rate Regulations (Cont'd)

6.7.1 Description and Application of Rates and Charges (Cont'd)

(D) Reserved for Future Use

(E) Reserved for Future Use

(F) Application of the Switched Transport Rate

The Switched Transport rate applies per access minute.

6.7.2 Minimum Period

Switched Access Service is provided for a minimum period of one (1) month.

6.7.3 Reserved for Future Use

6.7.4 Reserved for Future Use

6.7.5 Change of Feature Group Type

Changes from one type of Feature Group to another will be treated as a discontinuance of one type of service and a start of another. When a customer upgrades a Feature Group B service to Feature Group D service, minimum period obligations will not change, i.e., the time elapsed in the existing minimum period obligations will be credited to the minimum period obligations for Feature Group D service. For all other changes from one type of Feature Group to another, new minimum period obligations will be established. (C)

6.7.6 Reserved for Future Use

CENTRALIZED EQUAL ACCESS SERVICE

6. Switched Access Service (Cont'd)

6.7 Rate Regulations (Cont'd)

6.7.7 Measuring Access Minutes

Customer traffic to and from end offices of the Routing Exchange Carriers set forth in Section 9 following will be measured (i.e., recorded) by Iowa Network at its central access tandem. Originating and terminating calls will be measured (i.e., recorded) by Iowa Network to determine the basis for computing chargeable access minutes. In the event the customer message detail is not available because Iowa Network lost or damaged tapes or incurred recording system outages, Iowa Network will estimate the volume of lost customer access minutes of use based on previously known values. For terminating and originating calls over FGB and FGD, the measured minutes are the chargeable access minutes. (C)

(D)

(D)

CENTRALIZED EQUAL ACCESS SERVICE

6. Switched Access Service (Cont'd)

6.7 Rate Regulations (Cont'd)

6.7.7 Measuring Access Minutes (Cont'd)

(D)

(D)

6. Switched Access Service (Cont'd)

6.7 Rate Regulations (Cont'd)

6.7.7 Measuring Access Minutes (Cont'd)

(D)
|
|
|
(D)

FGB and FGD access minutes or fractions thereof, the exact value of the fraction being a function of the switch technology where the measurement is made, are accumulated over the billing period for each end office, and are then rounded up to the nearest access minute for each end office. (C)

(A) Reserved for Future Use

(B) Feature Group B Usage Measurement

For originating calls over FGB, usage measurement begins when Iowa Network's central access tandem receives trunk seizure acknowledgement from the customer's switch indicating the customer is ready to receive the call.

The measurement of originating call usage over FGB ends when Iowa Network's central access tandem receives disconnect supervision from either the originating end user's end office, indicating the originating end user has disconnected, or the customer's switch, whichever is recognized first by Iowa Network's central access tandem.

For terminating calls over FGB, the measurement of access minutes begins when the terminating FGB first point of switching

CENTRALIZED EQUAL ACCESS SERVICE

6. Switched Access Service (Cont'd)

6.7 Rate Regulations (Cont'd)

6.7.7 Measuring Access Minutes (Cont'd)

(B) Feature Group B Usage Measurement (Cont'd)

receives answer supervision from the terminating end user's end office, indicating the terminating end user has answered. (C) (X) | | (C) (X)

(X) Issued under authority of Special Permission Number 89-150 of the Federal Communications Commission.

CENTRALIZED EQUAL ACCESS SERVICE

6. Switched Access Service (Cont'd)

6.7 Rate Regulations (Cont'd)

6.7.7 Measuring Access Minutes (Cont'd)

(B) Feature Group B Usage Measurement (Cont'd)

The measurement of terminating call usage over FGB ends when Iowa Network's central access tandem receives disconnect supervision from either the terminating end user's end office, indicating the terminating end user has disconnected, or the customer's switch, whichever is recognized first by Iowa Network's central access tandem.

(C) Reserved for Future Use

(C)

(D)

(D)

6. Switched Access Service (Cont'd)

6.7 Rate Regulations (Cont'd)

6.7.7 Measuring Access Minutes (Cont'd)

(D) Feature Group D Usage Measurement

For originating calls over FGD with multi-frequency address signaling, usage measurement begins when Iowa Network's central access tandem receives the first wink supervisory signal forwarded from the customer's switch. For originating calls over FGD with CCSA, usage measurement begins when either the Exit Message (EXM) or Address Complete Message (ACM) is received. The measurement of originating call usage over FGD ends when Iowa Network's central access tandem receives disconnect supervision from either the originating end user's end office, indicating the originating end user has disconnected, or the customer's switch, whichever is recognized first by Iowa Network's central access tandem. (C) (C) (N) | | (N)

For terminating calls over FGD, the measurement of access minutes begins when the terminating FGD first point of switching receives answer supervision from the terminating end user's end office, indicating the terminating end user has answered.

CENTRALIZED EQUAL ACCESS SERVICE

6. Switched Access Service (Cont'd)

6.7 Rate Regulations (Cont'd)

6.7.7 Measuring Access Minutes (Cont'd)

(D) Feature Group D Usage Measurement (Cont'd)

The measurement of terminating call usage over FGD ends when Iowa Network's central access tandem receives disconnect supervision from either the terminating end user's end office, indicating the terminating end user has disconnected, or the customer's switch, whichever is recognized first by Iowa Network's central access tandem.

6.7.8 Network Blocking Rate for Feature Group D

The customer will be notified by Iowa Network to increase its busy hour minutes of capacity when excessive trunk group blocking occurs on groups carrying Feature Group D traffic and the measured access minutes for that hour exceed that purchased. Excessive trunk group blocking occurs when the blocking thresholds stated below are exceeded. They are predicated on time consistent, hourly measurements over a thirty (30) day period excluding Saturdays, Sundays and national holidays. If the order for additional capacity has not been received by Iowa Network within fifteen (15) days of the notification, Iowa Network will bill the customer, at the rate set forth in 6.8.1 (B) following, for each over-flow in excess of the blocking threshold when (1) the average "30-day period" overflow exceeds the threshold level for any particular hour and (2) the "30-day period" measured average originating or two-way usage for the same clock hour exceeds the capacity purchased.

6. Switched Access Service (Cont'd)

6.7 Rate Regulations (Cont'd)

6.7.8 Network Blocking Rate for Feature Group D (Cont'd)

Blocking Thresholds

Trunks in Service	1/2%
1-2	.045
3-4	.035
5-6	.025
7 or greater	.020

6.7.9 Reserved for Future Use

6.7.10 Reserved for Future Use

6.7.11 Reserved for Future Use

6.7.12 Reserved for Future Use

6.7.13 Reserved for Future Use

6. Switched Access Service (Cont'd)

6.8 Rates and Charges

6.8.1 Switched Transport

(A) Rate

	Rate Per Access Minute	
	$ 0.00896	(I)

	Rate Per Call Blocked
(B) Network Blocking Charge +	$ 0.0070

(C) Nonrecurring Charges

(1) Installation

	Rate Per Trunk
Activation of the first trunk or SNAC contained in the order	$ 514.68
Activation of each additional trunk or SNAC contained in an order	$ 12.55

(2) Interim NXX Translation

	Rate Per Order
Activation or deactivation of the first NXX code contained in an order	$ 213.70
Activation or deactivation of each additional NXX code contained in an order	$ 23.81

+Applies to FGD

7.

RESERVED FOR FUTURE USE

CENTRALIZED EQUAL ACCESS SERVICE

8. Customer's Point of Interconnection Information

8.1 General Information

Centralized Equal Access Service is available to customers that interconnect with Iowa Network's facilities at either Iowa Network's central access tandem or another Iowa Network premises listed in this section on which the central offices of the Routing Exchange Carriers home their traffic. The V&H coordinates for the points of interconnection listed in Section 8.2 following are set forth in National Exchange Carrier Association, Inc. Tariff F.C.C. No. 4. (N) (X) (N) (X)

8.2 Customer's Point of Interconnection

Central Access Tandem	Iowa Network Premises	(C) (X)
Des Moines	Cedar Rapids	
Des Moines	Clarinda	
Des Moines	Creston	
Des Moines	Davenport	
Des Moines	Des Moines	
Des Moines	Fort Dodge	
Des Moines	Grinnell	
Des Moines	Knoxville	
Des Moines	Mason City	
Des Moines	Mount Ayr	
Des Moines	Mount Pleasant	
Des Moines	Newton	(C) (X)

(X) Issued under authority of Special Permission Number 89-150 of the Federal Communications Commission.

Certain regulations previously found on this page can now be found on Original Page 147.1.

CENTRALIZED EQUAL ACCESS SERVICE

8. Customer's Point of Interconnection Information (Cont'd)

8.2 Customer's Point of Interconnection (Cont'd)

Central Access Tandem	Iowa Network Premises	
Des Moines	Osceola	(C) (X)
Des Moines	Omaha	
Des Moines	Sioux City	
Des Moines	Spencer	(C) (X)

(X) Issued under authority of Special Permission Number 89-150 of the Federal Communications Commission.

Certain regulations found on this page formerly appeared on Original Page 147.

CENTRALIZED EQUAL ACCESS SERVICE

9. Routing Exchange Carriers

9.1 Exchanges and Localities

The names of the Routing Exchange Carriers (RECs) are as follows:

`

RECs

Ace Telephone Association

Ace Tel Assn - IA (OCN 1346) (N)

Advanced Ntwk Comm (OCN 7458) (N)

Algona Municipal Utilities

Algona Mun Ut - IA (OCN 9900) (N)

Alliance Com Coop-IA (OCN 1405)

Alliance Connect-IA (OCN 444G) (N)

Alpine Communications

Alpine Comm L.C. (OCN 1106) (N)

Alta Municipal Utility

Alta Municipal UT-IA (OCN 3097) (N)

Andrew Telephone Company, Inc. (OCN 1097) (T)

Arcadia Telephone Cooperative (OCN 1098)

Atkins Telephone Company, Inc. (OCN 1101) (T)

Aventure Communications Technology, LLC

Ayrshire Farmers Mutual Telephone Co. (OCN 1105) (T)

Baldwin-Nashville Telephone Co., Inc. (OCN 1107) (T)

Certain regulations previously found on this page can now be found on Original Page 148.1

CENTRALIZED EQUAL ACCESS SERVICE

9. Routing Exchange Carriers (Cont'd)

9.1 Exchanges and Localities (Cont'd)

RECs (Cont'd)

Barnes City Cooperative Telephone Company (OCN 1108)	(T)	(M)
Bernard Telephone Company, Inc. (OCN 1110)		
Breda Telephone Corp., Inc. (OCN 1112)		
Brooklyn Mutual Telecommunications Cooperative (OCN 1113)	(T)	
BTC, Inc.		(M)
BTC, Inc. - IA (OCN 156C)	(N)	
Butler-Bremer Mutual Telephone Company	(M)	
Butler-Bremer Mut Co (OCN 1115)	(N)	
Cascade Communications Company (OCN 1118)	(T)	(M)
Casey Mutual Telephone Company (OCN 1119)		
Cedar Communications, LLC (OCN 4796)		
Center Junction Telephone Co., Inc. (OCN 1121)		
Central Scott Telephone Company (OCN 1125)	(T)	(M)
Centurylink (OCN 1274)	(N)	
CenturyTel of Postville, Inc.	(M)	
Chat Mobility (OCN 6674)	(N)	

Certain regulations found on this page formerly appeared on 3rd Revised Page 148 and 3rd Revised Page 149.

CENTRALIZED EQUAL ACCESS SERVICE

9. Routing Exchange Carriers (Cont'd)

9.1 Exchanges and Localities (Cont'd)

RECs (Cont'd)

Citizens Mutual Telephone Cooperative (OCN 1129)	(T)
Clarence Telephone Company, Inc. (OCN 1130)	(T)
Clarksville Telephone Company, Inc.	
Clear Lake Independent Telephone Company (OCN 1132)	(T)
C-M-L Telephone Cooperative Association of Meriden, Iowa (OCN 1133)	
Colo Telephone Company (OCN 1134)	(T)
Commchoice of Iowa (OCN 4092	(N)
Communications 1 Network, Inc. (OCN 1262)	(T)
Comms 1 Ntw - IA (OCN 842E)	(N)
Community Agcy-IA (OCN 3112)	(N)
Community Cable Television Agency of O'Brien County	
Coon Creek Telecommunications (OCN 4189)	(T)
Coon Creek Telephone Company (OCN 1136)	(T)

Certain regulations previously found on this page can now be found on Original Page 148.1

CENTRALIZED EQUAL ACCESS SERVICE

9. Routing Exchange Carriers (Cont'd)

9.1 Exchanges and Localities (Cont'd)

RECs (Cont'd)

Coon Rapids Municipal Communications Utility

Coon Rapids Mun Util (OCN 4069) (N)

Coon Valley Cooperative Telephone Association, Inc.

Coon Vly Coop Tel (OCN 1137) (N)

Cooperative Tel Co (OCN 1139) (N)

Cooperative Telephone Company (Victor)

Cooperative Telephone Exchange (Stanhope)

Cooperative Tel Exch (OCN 1303) (N)

Corn Bel Comm - IA (OCN 3699) (N)

Corn Belt Telephone Company (OCN 1141) (T)

CS Technologies (OCN 272H) (N)

CS Technologies IA (OCN 204A) (N)

Cumberland Telephone Company (OCN 1146) (T)

Danville Mutual Telephone Company (OCN 1147)

Dixon Telephone Company (OCN 1150)

Dumont Telephone Company (OCN 1152)

Dunkerton Telephone Cooperative (OCN 1153)

East Buchanan Telephone Cooperative (OCN 1156) (T)

CENTRALIZED EQUAL ACCESS SERVICE

9. Routing Exchange Carriers (Cont'd)

9.1 Exchanges and Localities (Cont'd)

RECs (Cont'd)

Ellsworth Cooperative Telephone Association

Ellsworth Coop Tel (OCN 1157) (N)

Enventis (OCN 8593)

F&B Comm., Inc. - IA (OCN 4245) (N)

F&B Communications, Inc. (OCN 1160) (T)

Farmers & Merch Mut (OCN 1166) (N)

Farmers and Merchants Mutual Telephone Co. (Wayland)

Farmers Coop Tel Co (OCN 1162) (N)

Farmers Cooperative Telephone Co. (Dysart)

Farmers Merch Tel-IA (OCN 198H) (N)

Farmers Mtl Telco (OCN 1171)

Farmers Mut Coop Tel (OCN 1169)

Farmers Mut Cop Telc (OCN 1168)

Farmers Mut Tel (OCN 1173)

Farmers Mutual Co-Op (OCN 5417)

Farmers Mutual Tel (OCN 1174)

Farmers Mutual Telc (OCN 1172)

Farmers Mutual-IA (OCN 5395) (N)

Certain regulations previously found on this page can now be found on Original Page 150.1.

CENTRALIZED EQUAL ACCESS SERVICE

9. Routing Exchange Carriers (Cont'd)

9.1 Exchanges and Localities (Cont'd)

RECs (Cont'd)

Farmers Mutual Cooperative Telephone Co. (Harlan)	(M)	
Farmers Mutual Cooperative Telephone Co. (Moulton)		
Farmers Mutual Telephone Co. (Jesup)		
Farmers Mutual Telephone Co. (Nora Springs)		
Farmers Mutual Telephone Co. (Stanton)		
Farmers Mutual Telephone Cooperative (Shellsburg)		
Farmers Telephone Company (Batavia)		
Farmers Telephone Company (Essex)		
Farmers Telephone Company (Nora Springs)	(M)	
Farmers Tel Co - IA (OCN 1176)	(N)	
Farmers Tel Co (OCN 1177)		
Farmers Telephone Co (OCN 1175)	(N)	
Fenton Cooperative Telephone Company (OCN 1179)	(M)	(T)
Fibercomm, L.C. (OCN 7021)	(N)	
Goldfield Access Network (OCN 7094)	(M)	(T)
Goldfield Telephone Company (OCN 1188)	(M)	(T)
Grand Mound Comm IA (OCN 198D)	(N)	
Grand Mound Cooperative Telephone Association (OCN 1191)	(M)	(T)

Certain regulations found on this page formerly appeared on 3rd Revised Page 150 and 3rd Revised Page 151.

CENTRALIZED EQUAL ACCESS SERVICE

9. Routing Exchange Carriers (Cont'd)

9.1 Exchanges and Localities (Cont'd)

RECs (Cont'd)

Grand River Mutual (OCN 1888)	(N)
Grand River Mutual Telephone Corp.	
Great Lakes Comm-IA (OCN 345D)	(N)
Great Lakes Communication Corp.	
Griswold Cooperative Telephone Company (OCN 1195)	(T)
Grundy Center Municipal Utilities	
Grundy Ctr Util - IA (OCN 3614)	(N)
Guthrie Telecommunications Network	
Guthrie Telecom - IA (OCN 5840)	(N)
Harlan Municipal-IA (OCN 5361)	(N)
Hawarden Municipal Utilities (OCN 8708)	(T)
Hawkeye Telephone Company (OCN 1199)	(T)
Heart of Iowa Communications Cooperative	
Heart of IA Comm (OCN 1297)	(N)
Heart of IA Ventures (OCN 346F)	(N)
Hills Telephone Company, Inc.	
Hospers Telephone Company, Inc.	
Hospers Tel Exch Inc (OCN 1202)	(N)

Certain regulations previously found on this page can now be found on Original Page 150.1. and 1st Revised Page 151.1.

CENTRALIZED EQUAL ACCESS SERVICE

9. Routing Exchange Carriers (Cont'd)

9.1 Exchanges and Localities (Cont'd)

RECs (Cont'd)

HTC Comm - IA (OCN 966F)

Hubbard Cooperative Telephone Association

Hubbard Coop Tel (OCN 1203)

Huxley Communications Cooperative

Huxley Comm Coop -IA (OCN 5852)

Huxley Communications Corp. (OCN 1205)

Iamo Telephone Company

Iamo Tel Co IA (OCN 1206)

Imon Comm, LLC - IA (OCN 695G)

Independence Telecom (OCN 649D)

Independence Telecommunications Utility

Independent Networks, LLC (OCN 7215)

Interstate 35 Telephone Company

Interstate Cablevision Company – IA (OCN 860E) (N)

Interstate Comm. (OCN 1209)

Iowa Telecommunications Services, Inc.

Iowa Wireless Svcs (OCN 8577)

Jefferson Telephone Company (OCN 1212)

Jordan-Soldier Valley Telephone Company (OCN 1213)

Kalona Cooperative Telephone Company (OCN 1214)

Certain regulations previously found on this page can now be found on 1st Revised Page 151.2.

CENTRALIZED EQUAL ACCESS SERVICE

9. Routing Exchange Carriers (Cont'd)

9.1 Exchanges and Localities (Cont'd)

RECs (Cont'd)

Keystone Farmers Cooperative Telephone Company (M)

Keystone Farms Coop (OCN 1217)

Killduff Telephone Company (OCN 747C)

La Motte Telephone Company (OCN 1222)

La Porte City Telephone Company (OCN 1220)

Laurel Telephone Co., Inc.

Laurens Municipal Broadband Communications Utility (OCN 4115)

Lehigh Valley Cooperative Telephone Association (OCN 1225)

Lenox Mun Ut IA Comm (OCN 168F)

Liberty Communications

Local Telephone Data (OCN 2842)

Lone Rock Cooperative Telephone Company (OCN 1228)

Long Lines Metro SD (OCN 7010)

Long Lines Siouxland, LLC

Long Lines Wireless (OCN 819D)

Long Ln Siouxland NE (OCN 583E)

Lost Nation-Elwood Telephone Co. (OCN 1229)

Louisa Communication (OCN 4650)

LTDS Corporation

Certain regulations found on this page formerly appeared on 2nd Revised Page 151.1.

CENTRALIZED EQUAL ACCESS SERVICE

9. Routing Exchange Carriers (Cont'd)

9.1 Exchanges and Localities (Cont'd)

RECs (Cont'd)

Lynnville Comm Telco (OCN 1232)	(N)
Lynnville Telephone Co., Inc.	
Mahaska Communications Group, LLC	
Mahaska Comms Grp IA (OCN 916A)	(N)
Manning Munpl Comm (OCN 3057)	(N)
Mapleton Communications	
Mapleton Com Ut - IA (OCN 130A)	(N)
Marne & Elk Horn Telephone Co.	
Marne & Elk Horn Tel (OCN 1237)	(N)
Marne & Elk Horn Tel (OCN 206D)	
Martelle Com Coop IA (OCN 351F)	(N)
Martelle Cooperative Telephone Association	
Martelle Coop Tel (OCN 1238)	(N)
Massena Telephone Company, Inc. (OCN 1239)	(T)
MCC Telephony - IA (OCN 751F)	(N)
Mechanicsville Telephone Company (OCN 1241)	(T)
Mediapolis Telephone Company (OCN 1251)	
Miles Cooperative Telephone Association (OCN 1242)	(T)
Miller Telephone Company	

Certain regulations previously found on this page can now be found on Original Page 151.2 and 4th Revised Page 153.

CENTRALIZED EQUAL ACCESS SERVICE

9. Routing Exchange Carriers (Cont'd)

9.1 Exchanges and Localities (Cont'd)

RECs (Cont'd)

Minburn Telecommunications, Inc. (OCN 1158)	(M)	(T)
Minburn Telephone Company (OCN 1245)	(M)	(T)
Minburn Tel - IA (OCN 143H)	(N)	
Minerva Valley Telephone Co., Inc. (OCN 1246)	(M)	(T)
Modern Cooperative Telephone Co. (OCN 1247)	(M)	(T)
Montezuma Mutual Telephone Co.		
Monarc Techn - IA (OCN 629F)	(N)	
Morley Telephone Company		
Mutual Telephone Company of Morning Sun (OCN 1250)	(T)	
Mutual Telephone Co (OCN 1252)	(N)	
Nexgen Integrated IA (OCN 859D)	(N)	
North English Cooperative Telephone Company (OCN 1257)	(T)	
Northeast Iowa Telephone Co. (OCN 1230)		
Northern Iowa Telephone Company (OCN 1259)	(T)	
Northland Comm - IA (OCN 068H)	(N)	
Northwest Iowa Telephone Company (OCN 1260)	(T)	
Northwest Telephone Cooperative Association		
Northwest Tel Coop (OCN 1261)	(N)	
Ogden Telephone Company (OCN 1263)	(T)	

Certain regulations found on this page formerly appeared on 2nd Revised Page 152. Certain regulations previously found on this page can now be found on 2nd Revised Page 153.1.

CENTRALIZED EQUAL ACCESS SERVICE

9. Routing Exchange Carriers (Cont'd)

9.1 Exchanges and Localities (Cont'd)

RECs (Cont'd)

Olin Telephone Company, Inc. (OCN 1264)	(M)	(T)
OmniTel Communications	(M)	
Omnitel Comm - IA (OCN 3620)	(N)	
Onslow Cooperative Telephone Association (OCN 1265)	(M)	(T)
Oran Mutual Telephone Company (OCN 1266)		(T)
Orange City Communications	(M)	
Orange City Comm IA (OCN 9769)	(N)	
Osage Municipal Utilities		
Osage Mun Com Ut IA (OCN 9758)	(N)	
Palmer Mutual Telephone Company (OCN 1270)	(T)	
Palo Cooperative Telephone Association (OCN 1269)	(T)	
Panora Communications Telephone Cooperative		
Panora Comm. Coop. (OCN 1271)	(N)	
Partner Communications Cooperative (OCN 1187)	(T)	
Peoples Telephone Company (OCN 1273)		
Prairie Telephone Co., Inc. (OCN 1344)		
Prairieburg Telephone Co., Inc. (OCN 1275)	(T)	

Certain regulations found on this page formerly appeared on 3rd Revised Page 153. Certain regulations previously found on this page can now be found on Original Page 153.2.

CENTRALIZED EQUAL ACCESS SERVICE

9. Routing Exchange Carriers (Cont'd)

9.1 Exchanges and Localities (Cont'd)

RECs (Cont'd)

Premier Communications	(M)	
Premier Comms - IA (OCN 904D)	(N)	
Preston Telephone Company	(M)	
Preston Tel Co - IA (OCN 1276)	(N)	
Radcliffe Telephone Company	(M)	
Radcliffe Tel Co Inc (OCN 1277)	(N)	
Readlyn Telephone Company (OCN 1278)	(M)	(T)
Reasnor Telco, LLC (OCN 739D)	(N)	
Reinbeck Municipal Telecommunications Utility (OCN 9129)	(M)	(T)
Ringsted Telephone Company (OCN 1280)		
River Valley Telecommunications Cooperative (OCN 1189)	(M)	(T)

Certain regulations found on this page formerly appeared on 1st Revised Page 153.1 and 2rd Revised Page 154.

CENTRALIZED EQUAL ACCESS SERVICE

9. Routing Exchange Carriers(Cont'd)

9.1 Exchanges and Localities (Cont'd)

RECs (Cont'd)

Rockwell Cooperative Telephone Association

Rockwell Coop Tel (OCN 1282) (N)

Royal Telephone Company (OCN 1283) (T)

Ruthven Telephone Exchange Co.

Sac County Mutual Telephone Co. (OCN 1285) (T)

Schaller Telephone Company (OCN 1291)

Scranton Telephone Company (OCN 1294)

Searsboro Telephone Company (OCN 1292)

Sharon Telephone Company (OCN 1293) (T)

Shell Rock Comm (OCN 1295) (N)

Shell Rock Telephone Company

Shellsburg Cblvsn-IA (OCN 527G) (N)

South Central Communications, Inc. (OCN 1094) (T)

South Slope Cooperative Telephone Company, Inc. (OCN 1298) (T)

South Slope Telco IA (OCN 562E) (N)

Southwest Telephone Exchange, Inc. (OCN 1301) (T)

Spencer Mun Comm Ut (OCN 3390) (N)

Spencer Municipal Utilities

Springville Cooperative Telephone Association, Inc. (OCN 1302) (T)

Stratford Mutual Telephone Co. (OCN 1305). (T)

CENTRALIZED EQUAL ACCESS SERVICE

9. Routing Exchange Carriers(Cont'd)

9.1 Exchanges and Localities(Cont'd)

RECs (Cont'd)

Sully Telephone Association (OCN 1306)	(T)
Superior Telephone Cooperative (OCN 1307)	
Swisher Telephone Company (OCN 1304)	
Templeton Telephone Company (OCN 1308)	
Terrill Telephone Cooperative (OCN 1309)	(T)
Titonka-Burt Comm (OCN 1310)	(N)
Titonka Telephone Company	
United Farmers Telephone Co. (OCN 1316)	(T)
Universal Communications of Allison, Inc.	
Van Buren Telephone Co., Inc. (OCN 1319)	(T)
Van Horne Cooperative Telephone Co. (OCN 1320)	
Ventura Telephone Company, Inc. (OCN 1322)	(T)
Verizon Wireless-IA (OCN 6570)	(N)
Villisca Farmers Telephone Company (OCN 1324)	(T)

CENTRALIZED EQUAL ACCESS SERVICE

9. Routing Exchange Carriers (Cont'd)

9.1 Exchanges and Localities (Cont'd)

RECs (Cont'd)

Walnut Telco - IA (OCN 774B)	(N)
Walnut Telephone Company, Inc. (OCN 1326)	(T)
Webb-Dickens Telephone Corp. (OCN 1327)	(T)
Webster-Calhoun Cooperative Telephone Assn. (OCN 1328)	
Wellman Cooperative Telephone Association (OCN 1329)	
West Iowa Telephone Company (OCN 1331)	
West Liberty Telephone Company (OCN 1332)	
Western Iowa Telephone Association (OCN 1334)	
Westside Independent Telephone Co. (OCN 1335)	(T)
Wilton Telephone Co (OCN 1336)	(N)
Windstream Montezuma (OCN 1248)	(N)
Winnebago Cooperative Telephone Association (OCN 6103)	(T)
Winnebago Cooptel-IA (OCN 1337)	(N)
Woolstock Mutual Telephone Association (OCN 1342)	(T)
WSTN IA Tel Assoc-IA (OCN 205H)	(N)
WTC Communications, Inc.	
Wyoming Mutual Telephone Company (OCN 1343)	(T)

10.

RESERVED FOR FUTURE USE

CENTRALIZED EQUAL ACCESS SERVICE

11.

RESERVED FOR FUTURE USE

CENTRALIZED EQUAL ACCESS SERVICE

12.

RESERVED FOR FUTURE USE

CENTRALIZED EQUAL ACCESS SERVICE

13. Additional Engineering, Additional Labor and Miscellaneous Services

In this section, normally scheduled working hours are an employee's scheduled work period in any given calendar day (e.g., 7:00 a.m. to 4:00 p.m.) for the application of rates based on working hours. A Miscellaneous Service Order Charge, applies to any service, or combination of services ordered simultaneously from this section of the Tariff for which a service order is not already pending which does not have the charge applied. The Miscellaneous Service Order Charge is an administrative charge designed to compensate for the expenses associated with service order issuance.

The charge always applies to the following services since a pending service order would not exist: Overtime Repair (13.2.2), Stand by Repair (13.2.3), Testing and Maintenance with Other Telephone Companies other than when in conjunction with Acceptance Testing (13.2.4), Other Labor (13.2.5) and Maintenance of Service (13.3.1).

The charge does not apply to the following services since there would exist a pending service order: Additional Engineering (13.1), Overtime Installation (13.2.1), Stand by Acceptance Testing (13.2.3), Testing and Maintenance with Exchange Telephone Companies when in conjunction with Acceptance Testing (13.2.4), and Additional Cooperative Acceptance Testing [13.3.4(A)(1) and 13.3.4(B)(1)]. This charge is as follows:

- Miscellaneous Service Order Charge,
  per occurrence $19.28

13. Additional Engineering, Additional Labor and Miscellaneous Services (Cont'd)

13.1 Additional Engineering

Additional Engineering will be provided by Iowa Network at the request of the customer only when:

(A) A customer requests additional technical information after Iowa Network has already provided the technical information normally included on the Design Layout Report (DLR) as set forth in 6.1.4 preceding.

(B) Reserved for Future Use

(C) A customer requests a Design Change, additional engineering time is incurred by Iowa Network for the engineering review as set forth in 5.2.2(C). The charge for additional engineering will apply whether or not Iowa Network proceeds with the design change.

Iowa Network will notify the customer that additional engineering charges, as set forth in 13.1.1 following, will apply before any additional engineering is undertaken.

13.1.1 Rates For Additional Engineering

The charges for additional engineering are as follows:

CENTRALIZED EQUAL ACCESS SERVICE

13. Additional Engineering, Additional Labor and Miscellaneous Services (Cont'd)

13.1 Additional Engineering (Cont'd)

13.1.1 Rates for Additional Engineering (Cont'd)

Additional Engineering Periods	Each Half Hour or Fraction Thereof
(A) Basic Time, normally scheduled working hours, per engineer	$36.00

Additional Engineering Periods	Each Half Hour or Fraction Thereof
(B) Overtime, outside of regularly scheduled working hours, per engineer	$54.00

13. Additional Engineering, Additional Labor and Miscellaneous Services (Cont'd)

13.2 Additional Labor

Additional labor is that labor requested by the customer on a given service and agreed to by Iowa Network as set forth in 13.2.1 through 13.2.5 following. Iowa Network will notify the customer that additional labor charges as set forth in 13.2.6 following will apply before any additional labor is undertaken.

13.2.1 Overtime Installation

Overtime installation is that Iowa Network installation effort outside of regularly scheduled working hours.

13.2.2 Overtime Repair

Overtime repair is that Iowa Network maintenance effort performed outside of regularly scheduled working hours.

13.2.3 Stand By

Stand by includes all time in excess of one-half (½) hour during which Iowa Network personnel stand by to make installation acceptance tests or cooperative tests with a customer to verify facility repair on a given service.

13.2.4 Testing and Maintenance with Exchange Telephone Companies

Additional testing, maintenance or repair of facilities which connect to facilities of Exchange Telephone Companies which is in addition to normal effort required to test, maintain or repair facilities provided solely by Iowa Network.

13. Additional Engineering, Additional Labor and Miscellaneous Services (Cont'd)

13.2 Additional Labor (Cont'd)

13.2.5 Other Labor

Other labor is that additional labor not included in 13.2.1 through 13.2.4 preceding and labor incurred to accommodate a specific customer request that involves only labor, which is not covered by any other section of this tariff.

13.2.6 Charges for Additional Labor

The charges for additional labor are as follows:

(A) Installation or Repair

Additional Labor Periods	Each Half Hour or Fraction Thereof
- Overtime, outside of regularly scheduled working hours, on a scheduled work day, per technician	$16.11*
- Premium Time, outside of scheduled work day, per technician	$20.99*

*A call-out of an Iowa Network employee at a time not consecutive with the employee's scheduled work period is subject to a minimum charge of four (4) hours.

CENTRALIZED EQUAL ACCESS SERVICE

13. Additional Engineering, Additional Labor and Miscellaneous Services (Cont'd)

13.2 Additional Labor (Cont'd)

13.2.6 Rates for Additional Labor (Cont'd)

(B) Stand by

Additional Labor Periods	Each Half Hour or Fraction Thereof
- Basic time, regularly scheduled working hours, per technician	$11.24
- Overtime, outside of regularly scheduled working hours, on a scheduled work day, per technician	$16.11*
- Premium Time, outside of scheduled work day, per technician	$20.99*

*A call-out of an Iowa Network employee at a time not consecutive with the employee's scheduled work period is subject to a minimum charge of four (4) hours.

CENTRALIZED EQUAL ACCESS SERVICE

13. Additional Engineering, Additional Labor and Miscellaneous Services (Cont'd)

13.2 Additional Labor (Cont'd)

13.2.6 Rates for Additional Labor (Cont'd)

The charges for additional labor are as follows:

Additional Labor Periods	Each Half Hour or Fraction Thereof	
	Installation and Repair Technician	Central Access Tandem Maintenance Technician
(C) Testing and Maintenance with Exchange Telephone Companies, or Other Labor		
- Basic Time, regularly scheduled working hours, per technician	$11.24	$11.24
- Overtime, outside of regularly scheduled working hours on a scheduled work day, per technician	$16.11*	$16.11*
- Premium Time, outside of scheduled work day, per technician	$20.99*	$20.99*

*A call-out of an Iowa Network employee at a time not consecutive with the employee's scheduled work period is subject to a minimum charge of four (4) hours.

13. Additional Engineering, Additional Labor and Miscellaneous Services (Cont'd)

13.3 Miscellaneous Services

13.3.1 Maintenance of Service

(A) When a customer reports a trouble to Iowa Network for clearance and no trouble is found in Iowa Network's facilities, the customer shall be responsible for payment of a Maintenance of Service charge for the period of time from when Iowa Network personnel are dispatched to the customer point of interconnection to when the work is completed. Failure of Iowa Network personnel to find trouble in Iowa Network facilities will result in no charge if the trouble is actually in those facilities, but not discovered at the time.

(B) The customer shall be responsible for payment of a Maintenance of Service charge when Iowa Network dispatches personnel to the customer point of interconnection and the trouble is in equipment or communications systems provided by other than Iowa Network.

In either (A) or (B) preceding, no credit allowance will be applicable for the interruption involved if the Maintenance of Service charge applies.

(C) The charges for Maintenance of Service are as follows:

Maintenance of Service Periods	Each Half Hour or Fraction Thereof
Basic Time, Overtime* and Premium Time*	See the rates for Additional Labor set forth in 13.2.6(C) preceding.

*A call-out of an Iowa Network employee at a time not consecutive with the employee's scheduled work period is subject to a minimum charge of four (4) hours.

13. Additional Engineering, Additional Labor and Miscellaneous Services (Cont'd)

13.3 Miscellaneous Services (Cont'd)

13.3.2 Reserved for Future Use

13.3.3 Reserved for Future Use

13.3.4 Testing Services

Iowa Network will, in addition to any customer requested acceptance testing, perform such tests as it believes necessary to ensure that the access services ordered by a customer are functioning properly prior to furnishing such access services to the customer. In addition, Iowa Network, as part of the ongoing work to maintain the continued satisfactory performance of the access services ordered by the customer, may perform periodic tests.

Testing Services offered under this section of the tariff are optional and subject to rates and charges as set forth in 13.3.4(C) following. Other testing services, as described in 6.1.5 and 6.1.6 preceding, are provided by Iowa Network in association with Access Services and are furnished at no additional charge. Testing Services are normally provided by Iowa Network personnel at Iowa Network locations. In addition, Iowa Network will, at the request of the customer, perform Acceptance Testing with the customer in accordance with the provisions set forth in Section 6 preceding.

The offering of Testing Services under this section of the Tariff is made subject to the availability of the necessary qualified personnel and test equipment at the various test locations mentioned in (A), (B) and (C) following.

13. Additional Engineering, Additional Labor and Miscellaneous Services (Cont'd)

13.3 Miscellaneous Services (Cont'd)

13.3.4 Testing Services (Cont'd)

(A) Switched Access Service

Testing Services for Switched Access are comprised of (a) tests which are performed during the installation of a Switched Access Service, and (b) tests which are performed after acceptance of such access services by a customer, i.e., in-service tests. These in-service tests may be further divided into two broad categories of tests: scheduled and nonscheduled.

Scheduled tests are those tests performed by Iowa Network on a regular basis, as set forth in Section 6.1.6 preceding which are required to maintain Switched Access Service. Scheduled tests may be done on an automatic basis (no Iowa Network or customer technicians involved) or on a cooperative basis (Iowa Network technician(s) involved at Iowa Network office(s) and customer technicians involved at customer terminal location(s)).

(1) Additional Cooperative Acceptance Testing

Additional Cooperative Acceptance Testing (ACAT) of Switched Access Service involves Iowa Network provision of a technician at its office(s) and the customer provides a technician at its terminal location(s), with suitable test equipment to perform the required tests.

Additional Cooperative Acceptance Tests may, for example, consist of the following tests:

13. Additional Engineering, Additional Labor and Miscellaneous Services (Cont'd)

13.3 Miscellaneous Services (Cont'd)

13.3.4 Testing Services (Cont'd)

(A) Switched Access Service (Cont'd)

(1) Additional Cooperative Acceptance Testing (Cont'd)

* C-Notched Noise
* Impulse Noise
* Phase Jitter
* Signal to C-Notched Noise Ratio
* Intermodulation (Nonlinear) Distortion
* Frequency Shift (Offset)
* Envelope Delay Distortion
* Dial Pulse Percent Break

(2) Additional Automatic Testing

Additional Automatic Testing (AAT) of Switched Access Services (Feature Groups B, C and D), where the customer provides remote office test lines and 105 test lines with associated responders or their functional equivalent, will consist of monthly loss and C-message noise tests and an annual balance test. However, the customer may specify a more frequent schedule of tests. In addition to the loss/noise/balance tests, the customer may also order, at additional charges, gain-slope and C-notched noise testing.

Iowa Network will provide an AAT report that lists the test results for each trunk tested. Trunk test failures requiring customer participation for trouble resolution will be provided to the customer on an as-occurs basis.

13. Additional Engineering, Additional Labor and Miscellaneous Services (Cont'd)

13.3 Miscellaneous Services (Cont'd)

13.3.4 Testing Services (Cont'd)

(A) Switched Access Service (Cont'd)

(3) Reserved for Future Use

(4) Obligations of the Customer

(a) The customer shall provide the Remote Office Test Line priming data to Iowa Network as appropriate, to support AAT as set forth in 13.3.4(A)(2) preceding.

(b) Reserved for Future Use

(B) Reserved for Future Use

(C) Rates and Charges

(1) Switched Access

(a) Additional Cooperative Acceptance Testing

Testing Period	Each Half Hour or Fraction Thereof
Basic Time, Overtime* and Premium Time*	See the rates for Additional Labor as set forth in 13.2.6(C) preceding.

*A call-out of an Iowa Network employee at a time not consecutive with the employee's scheduled work period is subject to a minimum charge of four (4) hours.

13. Additional Engineering, Additional Labor and Miscellaneous Services (Cont'd)

13.3 Miscellaneous Services (Cont'd)

13.3.4 Testing Services (Cont'd)

(C) Rates and Charges (Cont'd)

(1) Switched Access (Cont'd)

(b) Additional Automatic Testing (AAT)

The Additional Tests as set forth following may be ordered by the customer, at additional charges, 60 days prior to the start of the customer prescribed schedule.

To First Point of Switching

Additional Tests	Per Test Per Transmission Path
Gain-Slope Tests	$3.58
C-Notched Noise Tests	$3.58
1004 Hz Loss*	$3.58
C-Message Noise *	$3.58
Balance (return loss)*	$3.58

*1004 Hz Loss, C-Message Noise and Balance are non-chargeable routine tests, however, they may be requested on an as needed or more than routine scheduled basis, in which case the charges herein apply.

CENTRALIZED EQUAL ACCESS SERVICE

13. Additional Engineering, Additional Labor and Miscellaneous Services (Cont'd)

13.3 Miscellaneous Services (Cont'd)

13.3.5 Provision of Access Service Billing Information

(A) The customer will receive its monthly bills in a standard paper format. The customer may receive usage detail on 5 1/4 or 3 1/2 inch floppy diskette in lieu of paper upon request and for no additional charge (C)

(B) At the option of the customer, and for an additional charge:

(1) Customer monthly usage detail in support of the monthly bill may be provided on magnetic tape. (C)

(2) Billing detail and/or information may be transmitted to the customer terminal location by data transmission.

(3) Additional copies of the customer monthly bill or billing detail may be provided in standard paper or on 5 1/4 or 3 1/2 inch floppy diskette. (C)

(C) Upon acceptance by Iowa Network of an order for data transmission, Iowa Network will determine the period of time to implement the transmission of such material on an individual order basis.

(D) The rates and charges for the provision of Access Service Billing Information are as follows:

	FID	Rates
(1) Provision of Standard Bill Detail and/or Information in magnetic tape format, per record	DMT	ICB rates and charges apply

CENTRALIZED EQUAL ACCESS SERVICE

13. Additional Engineering, Additional Labor and Miscellaneous Services (Cont'd)

13.3 Miscellaneous Services (Cont'd)

13.3.5 Provision of Access Service Billing Information (Cont'd)

(D) (Cont'd)

	FID	Rates	
(2) Data Transmission to a customer Terminal Location of Bill Detail and/ or Information,			
per record transmitted	TRMD B	ICB rates and charges apply	
(3) Additional Copies of customer monthly bill or billing detail in standard paper format, or 5 1/4 inch or 3 ½ inch floppy diskette			(C) (C)
per page	BOD NEL		
per diskette	BOD FH	ICB rates and charges apply	(C)

13.3.6 Reserved for Future Use

14.

RESERVED FOR FUTURE USE

15. Interface Groups, Transmission Specifications and Channel Interfaces

15.1 Switched Transport Interface Groups

Interface Group 6 is provided with Type A or B Transmission Specifications, depending on the Feature Group. This Interface Group is provided with Data Transmission Parameters.

Only certain interfaces are available at the customer's points of interconnection set forth in Section 8 preceding. The interfaces associated with the Interface Group may vary among Feature Groups. The various interfaces, which are available with the Interface Group, and the Feature Groups with which it may be used, are set forth in 15.1.11 following.

15.1.1 Reserved for Future Use

15.1.2 Reserved for Future Use

15.1.3 Reserved for Future Use

15.1.4 Reserved for Future Use

15.1.5 Reserved for Future Use

15.1.6 Interface Group 6

Interface Group 6 provides DS1 level digital transmission at the points of interconnection set forth in Section 8 preceding. The interface is capable of transmitting electrical signals at a nominal 1.544 Mbps, with the capability to channelize up to twenty-four (24) voice frequency transmission paths. When analog switching utilizing analog terminations is provided, Iowa Network will provide multiplex and channel bank equipment to derive twenty-four (24) transmission paths of a frequency bandwidth of approximately three hundred (300) to three thousand (3000) Hz. When digital switching or analog switching with digital carrier terminations is provided, Iowa Network will provide, at the first point of switching, a DS1 signal in D3/D4 format.

CENTRALIZED EQUAL ACCESS SERVICE

15. Interface Groups, Transmission Specifications and Channel Interfaces (Cont'd)

15.1 Switched Transport Interface Groups (Cont'd)

15.1.6 Interface Group 6 (Cont'd)

The Interface is provided with individual transmission path bit stream supervisory signaling.

15.1.7 Reserved for Future Use

15.1.8 Reserved for Future Use

15.1.9 Reserved for Future Use

15.1.10 Reserved for Future Use

15.1.11 Available Interface Codes

Following is a matrix showing, for the Interface Group, which interface codes are available as a function of Iowa Network switch supervisory signaling and Feature Group. For explanations of these codes, see the Glossary of Channel Interface Codes in 15.3 following.

Interface Group	Telephone Company Switch Supervisory Signaling	Interface Code	Feature Group B	Feature Group D	
6	RV, EA, EB, EC	4DS9-15	X	X	(C)
	RV, EA, EB, EC	4DS9-15L	X	X	(C)

15.1.12 Supervisory Signaling

This Interface Group may, at the option of the customer, be provided with individual transmission path SF supervisory signaling where such signaling is available in Iowa Network's central access tandem. Generally, such signaling is available only where Iowa Network's central access tandem provides an analog, i.e. non-digital, interface and a portion of the facility provided by the customer between Iowa Network's central access tandem and the customer's premises is analog.

15. Interface Groups, Transmission Specifications and Channel Interfaces (Cont'd)

15.2 Transmission Specification Switched Access Service

15.2.1 Standard Transmission Specifications

Following are descriptions of the two Standard Transmission Specifications available with Switched Access Service Feature Groups. The specific applications in terms of the Feature Groups are set forth in 6.2.2(B) and 6.2.4(B) preceding. (C)

(A) Transmission Specifications

Type A Transmission Specifications is provided with the following parameters:

(1) Loss Deviation

The maximum Loss Deviation of the 1004 Hz loss relative to the Expected Measured Loss (EML) is ±2.0 dB.

(2) Attenuation Distortion

The maximum Attenuation Distortion in the 404 to 2804 Hz frequency band relative to the loss at 1004 Hz is -1.0 dB to +3.0 dB.

(3) C-Message Noise

The maximum C-Message Noise for the transmission path at the route miles listed is less than or equal to:

Route Miles	C-Message Noise*
less than 50	32 dBrnCO
51 to 100	34 dBrnCO
101 to 200	37 dBrnCO
201 to 400	40 dBrnCO
401 to 1000	42 dBrnCO

15. Interface Groups, Transmission Specifications and Channel Interfaces (Cont'd)

15.2 Transmission Specification Switched Access Service (Cont'd)

15.2.1 Standard Transmission Specifications (Cont'd)

(A) Type A Transmission Specifications (Cont'd)

(4) C-Notched Noise

The maximum C-Notched Noise, utilizing a -16 dBm0 holding tone is less than or equal to 45 dBrnCO.

(5) Echo Control

Echo Control, identified as Equal Level Echo Path Loss, and expressed as Echo Return Loss and Singing Return Loss is equal to or greater than the following:

Echo Return Loss	Singing Return Loss
16 dB	11 dB

(6) Reserved for Future Use

(B) Type B Transmission Specifications

Type B Transmission Specifications are provided with the following parameters:

(1) Loss Deviation

The maximum Loss Deviation of the1004 Hz loss relative to the Expected Measured Loss (EML) is ± 2.5 dB.

(2) Attenuation Distortion

The maximum Attenuation Distortion in the 404 to 2804 Hz frequency band relative to loss at 1004 Hz is -2.0 dB to +4.0 dB.

CENTRALIZED EQUAL ACCESS SERVICE

15. Interface Groups, Transmission Specifications and Channel Interfaces (Cont'd)

15.2 Transmission Specification Switched Access Service (Cont'd)

15.2.1 Standard Transmission Specifications (Cont'd)

(B) Type B Transmission Specifications (Cont'd)

(3) C-Message Noise

The maximum C-Message Noise for the transmission path at the route miles listed is less than or equal to:

Route Miles	C-Message Noise* Type B1	C-Message Noise* Type B2
less than 50	32 dBrnCO	35 dBrnCO
51 to 100	33 dBrnCO	37 dBrnCO
101 to 200	35 dBrnCO	40 dBrnCO
201 to 400	37 dBrnCO	43 dBrnCO
401 to 1000	39 dBrnCO	45 dBrnCO

(4) C-Notched Noise

The maximum C-Notched Noise, utilizing a -16 dBmO holding tone is less than or equal to 47 dBrnCO.

(5) Echo Control

Echo Control is identified as Impedance Balance for FGB and Equal Level Echo Path Loss for FGD, and expressed as Echo Return Loss (ERL) and Singing Return Loss (SRL) also differ by Feature Group. They are greater than or equal to the following: (C)

* For Feature Group D only, Type B2 will be provided. For Feature Group B, Type B1 and B2 will be provided as set forth in Technical Reference TR-NPL-000334. (C)

CENTRALIZED EQUAL ACCESS SERVICE

15. Interface Groups, Transmission Specifications and Channel Interfaces (Cont'd)

15.2 Transmission Specification Switched Access Service (Cont'd)

15.2.1 Standard Transmission Specifications (Cont'd)

(B) Type B Transmission Specifications (Cont'd)

(5) Echo Control

	Echo Return Loss	Singing Return Loss
For FGB access	8 dB	4 dB

(D)

(D)

(6) Reserved for Future Use

(C) Reserved for Future Use

15.2.2 Data Transmission Parameters

Two types of Data Transmission Parameters, i.e., Type DA and Type DB, are provided for the Feature Group arrangements. The specific applications in terms of the Feature Groups with which they are provided are set forth in 6.2.2(B) and 6.2.4(B) preceding. Following are descriptions of each. (C)

15. Interface Groups, Transmission Specifications and Channel Interfaces (Cont'd)

15.2 Transmission Specification Switched Access Service (Cont'd)

15.2.2 Data Transmission Parameters (Cont'd)

(A) Data Transmission Parameters Type DA

(1) Signal to C-Notched Noise Ratio

The Signal to C-Notched Noise Ratio is equal to or greater than 33 dB.

(2) Envelope Delay Distortion

The maximum Envelope Delay Distortion for the frequency bands and route miles specified is:

604 to 2804 Hz

less than 50 route miles	500 microseconds
equal to or greater than 50 route miles	900 microseconds

1004 to 2404 Hz

less than 50 route miles	200 microseconds
equal to or greater than 50 route miles	400 microseconds

(3) Impulse Noise Counts

The Impulse Noise Counts exceeding a 65 dBrnCO threshold in fifteen (15) minutes is no more than fifteen (15) counts.

15. Interface Groups, Transmission Specifications and Channel Interfaces (Cont'd)

15.2 Transmission Specification Switched Access Service (Cont'd)

15.2.2 Data Transmission Parameters (Cont'd)

(A) Data Transmission Parameters Type DA

(4) Intermodulation Distortion

The Second Order (R2) and Third Order (R3) Intermodulation Distortion products are equal to or greater than:

Second Order (R2)	33 dB
Third Order (R3)	37 dB

(5) Phase Jitter

The Phase Jitter over the 4-300 Hz frequency band is less than or equal to 5 degrees peak-to-peak.

(6) Frequency Shift

The maximum Frequency Shift does not exceed –2 to +2 Hz.

(B) Data Transmission Parameters Type DB

(1) Signal to C-Notched Noise Ratio

The signal to C-Notched noise Ratio is equal to or greater than thirty (30) dB.

(2) Envelope Delay Distortion

The maximum Envelope Delay Distortion for the frequency bands and route miles specified is:

15. Interface Groups, Transmission Specifications and Channel Interfaces (Cont'd)

15.2 Transmission Specification Switched Access Service (Cont'd)

15.2.2 Data Transmission Parameters (Cont'd)

(B) Data Transmission Parameters Type DB (Cont'd)

	604 to 2804 Hz
less than 50 route miles	800 microseconds
equal to or greater than 50 route miles	1000 microseconds

	1004 to 2404 Hz
less than 50 route miles	320 microseconds
equal to or greater than 50 route miles	500 microseconds

(3) Impulse Noise Counts

The Impulse Noise Counts exceeding a 67 dBrnCO threshold in fifteen (15) minutes is no more than fifteen (15) counts.

(4) Intermodulation Distortion

The Second Order (R2) and Third Order (R3) Intermodulation Distortion products are equal to or greater than:

Second Order (R2)	31 dB
Third Order (R3)	34 dB

CENTRALIZED EQUAL ACCESS SERVICE

15. Interface Groups, Transmission Specifications and Channel Interfaces (Cont'd)

15.2 Transmission Specification Switched Access Service (Cont'd)

15.2.2 Data Transmission Parameters (Cont'd)

(B) Data Transmission Parameters Type DB (Cont'd)

(5) Phase Jitter

The Phase Jitter over the 4-300 Hz frequency band is less than or equal to 7 degrees peak-to-peak.

(6) Frequency Shift

The maximum Frequency Shift does not exceed –2 to +2 Hz.

15.3 Reserved for Future Use

15.4 Reserved for Future Use

16. Commercial Mobile Radio Service Transport (N)

16.1 General

This section establishes terms and conditions governing the intrastate and interstate use of Iowa Network's facilities in the transport of calls from a subscriber of a Commercial Mobile Radio Service (CMRS) provider to a subscriber of a Routing Exchange Carrier and from a subscriber of a Routing Exchange Carrier to a subscriber of a CMRS provider. This tariff is being filed pursuant to 47 U.S.C. §303 and 332 establishing the FCC's primary jurisdiction over the service territory and rates charged for the routing of CMRS traffic. In the event that CMRS Transport is not considered an access service, compliance with this tariff satisfies a CMRS provider's obligation under 47 U.S.C. '251(b)(5) to pay Iowa Network for the transport of CMRS calls.

16.2 Definitions

The following definitions apply to this Section 16:

Commercial Mobile Radio Service (CMRS): As defined in the Communications Act of 1934, as amended by the Telecommunications Act of 1996.

Intermediary Carrier: Qwest Communications and other telecommunications carriers, other than Iowa Network, that carry Transiting Traffic.

Originating Traffic: Calls placed by subscribers of a Routing Exchange Carrier to subscribers of a CMRS Provider (wireline to wireless).

Terminating Traffic: Calls placed by subscribers of a CMRS Provider to subscribers of a Routing Exchange Carrier (wireless to wireline).

Transiting Traffic: CMRS traffic that originates from one telecommunications carrier's network, transits another telecommunications carrier's network, and terminates to yet another telecommunications carrier's network. Transiting traffic provides the ability for the Intermediary Carrier to use its connection to an Iowa Network local or access tandem for delivery of calls that originate with a CMRS provider, utilize the network of Iowa Network and terminate to a Routing Exchange Carrier. (N)

16. Commercial Mobile Radio Service Transport (Cont'd)

(N)

16.3 Types of Service

Terminating Traffic. A per minute charge shall be assessed to the CMRS provider for use of Iowa Network's CEA facilities for the transport of intrastate and interstate Terminating Traffic.

Originating Traffic. A per minute charge shall be assessed to the Interexchange Carrier selected by the Routing Exchange Carriers subscriber (either through presubscription or by dialing a carrier access code (*e.g.*, 101XXXX)) for the intrastate and interstate use of Iowa Networks CEA facilities.

16.4 Obligations of CMRS Provider

In addition to the general obligations of Customers under this tariff and to other obligations stated in this Section 16, CMRS providers must place an order with Iowa Network according to MECOD guidelines, prior to receiving service. Notwithstanding the foregoing, the use of the service described in this Tariff by a CMRS provider shall be treated as an order for service and the CMRS provider shall pay Iowa Networks for that service.

16.5 Obligations of Intermediary Carriers

(a) Provision of Usage Information

When an Intermediary Carrier delivers Transiting Traffic between a CMRS provider and Iowa Network, the Intermediary Carrier shall promptly provide Iowa Network with usage information for that CMRS provider. The usage information shall be in a form acceptable to Iowa Network and, at minimum, be consistent with MECAB and MECOD guidelines and in EMI format and otherwise sufficient to facilitate the billing of the CMRS provider pursuant to this tariff. If the Intermediary Carrier does not provide information requested by Iowa Network to accurately bill the CMRS provider, the Intermediary Carrier shall be the customer for purposes of this intrastate and interstate traffic. Iowa Network shall assess tariff charges to the Intermediary Carrier as described in this Section 16, and the Intermediary Carrier shall promptly pay such charges to Iowa Network pursuant to the terms of this tariff.

(N)

16. Commercial Mobile Radio Service Transport (Cont'd) (N)

16.5 Obligations of Intermediary Carriers (Cont'd)

(b) Blocking Capability

Not with standing Subsection (a), if the Intermediary Carrier provides information sufficient to block CMRS traffic originating with a CMRS provider that has failed to compensate Iowa Network for the provision of service described herein, and Iowa Network has the technical capability to block such CMRS traffic, Iowa Network may, at its sole discretion, elect to block the use of its network by the delinquent CMRS providers rather than treat the Intermediary Carrier as the customer with respect to such traffic.

(c) Intermediary Carrier Liability

Notwithstanding the forgoing Subsections (a) and (b), Intermediary Carriers are solely liable to Iowa Network for the termination of Transiting Traffic that was terminated by Iowa Network prior to the effective date of this tariff. Such liability was established and governed by applicable state tariffs filed and approved by the Iowa Utilities Board. Following the effective date of this tariff, this tariff rather than the Iowa Network state tariff shall govern the charges for the transport of intrastate and interstate CMRS traffic pursuant to the FCC's jurisdiction over such CMRS traffic.

16.6 Usage Charge

The charge applicable to intrastate and interstate Commercial Mobile Radio Service Transport, is the same charge applicable to other uses of Iowa Network's CEA facilities, and is found in Section 6.8.1(A). (N)

Exhibit 4

AT&T Forbearance Pet.,
WC Docket No. 16-363
(filed Sept. 30, 2016)

PUBLIC VERSION

Before the
FEDERAL COMMUNICATIONS COMMISSION
Washington, D.C. 20554

In the Matter of	)	
	)	
Petition of AT&T Services, Inc. For Forbearance Under 47 U.S.C. § 160(c) From Enforcement Of Certain Rules For Switched Access Services And Toll Free Database Dip Charges	)	WC Docket No. ____

Accepted / Filed

SEP 30 2016

Federal Communications Commission
Office of the Secretary

PETITION OF AT&T SERVICES, INC. FOR FORBEARANCE UNDER 47 U.S.C. § 160(c)

Michael J. Hunseder
E. Benton Keatley
Sidley Austin LLP
1501 K Street, NW
Washington, D.C. 20005
(202) 736-8000 - telephone
(202) 736-8711 - facsimile

Christi Shewman
Gary L. Phillips
David L. Lawson
AT&T Services, Inc.
1120 20th Street, NW
Suite 1000
Washington, D.C. 20036
(202) 457-3090 - telephone
(202) 463-8066 - facsimile

September 30, 2016

Attorneys for AT&T Services, Inc.

TABLE OF CONTENTS

Page

I. INTRODUCTION AND SUMMARY 1

II. BACKGROUND 4

III. STANDARD FOR FORBEARANCE 11

IV. THE COMMISSION SHOULD FORBEAR FROM TARIFFING REQUIREMENTS FOR TANDEM SWITCHING AND TANDEM-SWITCHED TRANSPORT ACCESS CHARGES ON CALLS TO OR FROM LECs ENGAGED IN ACCESS STIMULATION 13

V. THE COMMISSION SHOULD FORBEAR FROM RULES THAT PERMIT CHARGES FOR 8YY DATABASE DIPS. 18

PUBLIC VERSION

Before the
FEDERAL COMMUNICATIONS COMMISSION
Washington, D.C. 20554

In the Matter of	)	
Petition of AT&T Services, Inc. For Forbearance Under 47 U.S.C. § 160(c) From Enforcement Of Certain Rules For Switched Access Services And Toll Free Database Dip Charges	)	WC Docket No. ____

PETITION OF AT&T SERVICES, INC.
FOR FORBEARANCE UNDER 47 U.S.C. § 160(c)

Pursuant to 47 U.S.C. § 160(c) and 47 C.F.R. § 1.53, Petitioner AT&T Services, Inc., on behalf of its affiliates ("AT&T"),[1] hereby petitions and respectfully requests that the Commission grant forbearance from its rules for (i) switched access services related to tandem and transport service provided on calls to carriers engaged in access stimulation; and (ii) database query charges to long distance carriers for toll-free services.[2]

I. INTRODUCTION AND SUMMARY

In 2011, the Commission adopted a new regulatory regime for intercarrier compensation, determining that a "uniform national bill-and-keep framework" would be the "ultimate end state" for all telecommunications traffic between carriers. Report and Order, *In re Connect America Fund*, 26 FCC Rcd 17663, ¶ 34 (2011) ("*USF/ICC Transformation Order*"). The Commission

[1] AT&T Corp. is the AT&T affiliate that principally provides long distance services, and, as such, it is the entity that is billed and that pays the charges for the access services discussed in this Petition. AT&T also has affiliates that operate as local exchange carriers that bill for some of the access services discussed in the Petition.

[2] Pursuant to 47 C.F.R. § 1.54(a), Appendix A to this Petition contains the precise scope of the relief sought, including the specific rules and regulations for which forbearance is required under 47 U.S.C. § 160(c).

found that bill-and-keep had several "significant policy advantages," including the introduction of "market discipline" into intercarrier compensation, which under the traditional model often requires a carrier to accept the prices and terms in another carrier's filed tariff. *Id.* ¶¶ 738, 742. Additionally, the Commission concluded that "bill-and-keep" would "best address[] access charge arbitrage," *id.* ¶ 1297, which the Commission recognized would continue to exist, even though it also adopted some reforms to attempt to "curtail" the "most prevalent" forms of access arbitrage, such as "access stimulation." *See, e.g.*, *id.* ¶¶ 649, 690.

The transition to a bill-and-keep regime was neither immediate nor universal. Instead, the Commission adopted a "multi-year transition," and did so for only some switched access rate elements – such as terminating end office switching and "certain transport rate elements" – and for only certain carriers in specific circumstances. *Id.* ¶¶ 798, 800.[3] For other rate elements, including other tandem switching and tandem transport services, the Commission did not "specify the transition to reduce these rates" and instead asked for further comment, which was received in 2012. *Id.* ¶ 800; *see id.* ¶¶ 1297-1325. The Commission "agree[d]" with those commenters that "warn[ed] that failure to take action promptly on these [other] elements could perpetuate inefficiencies, delay the deployment of IP networks and IP-to-IP interconnection, and maintain opportunities for arbitrage." *Id.* ¶ 1297; *see id.* ¶¶ 817, 819.

The Commission is now several years into its multi-year transition, and, for many carriers, terminating end office switching rates will be transitioned to bill-and-keep on July 1, 2017. *Id.* ¶ 801. Further, even though some transport rates will transition to bill-and-keep on July 1, 2018, *see* note 3, the Commission has not yet specified a transition period for other

[3] For price cap carriers and competitive local exchange carriers ("CLECs") that benchmark to price cap carriers, terminating end office and transport is subject to the transition for all terminating traffic within the tandem serving area when the terminating carrier owns the serving tandem switch. *Id.* ¶ 800.

transport rates. Consequently, absent prompt action, charges for transport services will soon be arbitrarily asymmetric: some carriers in certain circumstances will be permitted to tariff transport charges indefinitely, whereas others will have already transitioned to bill-and-keep. This is precisely the type of arbitrary intercarrier compensation system that the Commission has been trying to eradicate by its reforms. *See id.* ¶ 9.

As explained in more detail in the background to this Petition, the Commission's failure to act has, in fact, "perpetuate[d] inefficiencies, delay[ed] the deployment of IP networks and IP-to-IP interconnection, and maintain[ed] opportunities for arbitrage." *Id.* ¶ 1297. AT&T thus urges the Commission to act with urgency and finish the intercarrier compensation reforms that it years ago concluded were vital.

While the Commission can and should promptly issue new rules to address the remaining inefficiencies and arbitrage activities in its hybrid intercarrier compensation system, in the remainder of this Petition, AT&T explains why the Commission also should take immediate steps, under its forbearance authority, to address several statutory and regulatory requirements that cause unreasonable rates, harm consumers, and are inconsistent with the public interest.

First, the Commission should forbear from the tariffing of access charges for tandem switching and tandem-switched transport for all LECs, including intermediate LECs, on all calls to or from LECs engaged in access stimulation. *See infra* Part IV. The Commission has already determined that access stimulation causes unreasonable access rates, harms consumers, and injures competition – as well as diverting capital from broadband expenditures. *Id.* ¶¶ 662-665. Although the Commission instituted partial reforms in 2011, it recognized that those reforms would not eliminate access stimulation or the many "adverse effects" that arise from it. Today, access stimulation schemes continue to flourish, in large part because the carriers engaged in the

practice are able to generate access bills with very high per-minute per-mile transport charges. Forbearance is necessary to protect ratepayers and IXCs from being forced (i) to contribute to the "inflated profits" of LECs engaged in access stimulation and (ii) to subsidize users of "free" conference and adult chat line services.

Second, the Commission should forbear from its rules allowing LECs to assess per query database dip charges on toll-free calls. *See infra* Part V. These tariffed database query charges, which are not covered by the Commission's existing transition to bill-and-keep or its benchmark rules for CLEC access charges, vary substantially among LECs, and many query charges for toll-free database dips are priced well above the rates that prevail in the wholesale market for query charges. Forbearance from rules that allow and encourage such charges in tariffs is consistent with the Commission's existing approach to intercarrier compensation, which "rejects the notion" that only one party to a call "benefits from [the] call and therefore should bear the entire cost of originating,. transporting, and terminating a call." *USF/ICC Transformation Order*, ¶ 34. Eliminating these per query charges will also eliminate an implicit subsidy and, by subjecting the costs of these queries to market discipline, will ultimately reduce charges to consumers. *Id.* ¶¶ 14, 742, 745.

II. BACKGROUND

In 2011, the Commission took a critically important step by adopting a national bill-and-keep framework, and determining that this new regime would serve as the "ultimate end state" for *all* intercarrier compensation, including originating access charges and all transport access charges. *USF/ICC Transformation Order* ¶¶ 34; *see id.* ¶¶ 817, 819. However, as described above, the Commission's bill-and-keep reforms were incomplete and inadequate, because many forms of intercarrier compensation – most notably originating access charges and many transport related charges – were not subject to any transition to the bill-and-keep regime. *Id.* ¶¶ 35, 1297.

Today, nearly five years later, there is still no transition to bill-and-keep for these rate elements, even though the Commission found that such a result would be "problematic." *Id.* ¶ 820 ("we agree . . . that the continuation of transport charges in perpetuity would be problematic"); *id.* ¶ 817 ("we find that originating charges for all telecommunications traffic . . . should ultimately move to bill-and-keep"); *see id.* ¶ 1297. Because of the incomplete reform, the system for the remaining rate elements remains subject to the many flaws that the Commission identified as existing with the traditional intercarrier compensation regime. *Id.* ¶ 9 ("ICC has become riddled with inefficiencies and opportunities for wasteful arbitrage"); *see id.* ¶¶ 648, 736-53, 820.

First, the charges imposed on long distance carriers for the remaining originating access and transport rate elements, even though they are mostly capped, *see id.* ¶¶ 798, 801, continue to reflect implicit subsidies and to be priced inefficiently, based on out-of-date rate structures. *Id.* ¶¶ 9, 648, 752-53. There is little doubt that both originating access charges and the transport charges not subject to transition are priced above cost, providing implicit subsidies to the charging carrier, to the detriment of ratepayers of the purchasing carriers. *Id.* ¶ 9 (under the traditional intercarrier compensation regime, there are "hundreds of millions of Americans paying more on their wireless and long distance bills than they should in the form of hidden, inefficient charges"). What is more, under the traditional intercarrier compensation system, charges for these rate elements were "built" on an outdated and inefficient rate structure based "on geographic and per-minute charges." *Id.* ¶ 648. Yet, under the Commission's existing regime for elements not subject to transition, carriers will continue indefinitely to bill per-minute originating access charges, as well as per-minute, per mile transport charges that have little rational relationship to their underlying cost.

Second, these inefficient originating access and transport charges are not subject to any effective "competitive discipline." *Id.* ¶ 742. As the Commission has explained, under the traditional regime, the market for switched access charges is not subject to full competition, and long distance carriers generally have no choice but to pay for access charges that are lawfully tariffed and properly provided pursuant to tariffs filed by the LECs. *See, e.g.*, *CLEC Access Charge Reform Order*, 16 FCC Rcd. 9923, ¶¶ 2, 30-31, 34 (2001).[4] Although the Commission has allowed carriers to negotiate rates for intercarrier compensation, *see USF/ICC Transformation Order* ¶ 812, the LECs providing the access services not subject to a transition to a bill-and-keep regime have little, if any, incentive to provide their customers (IXCs) with rates and terms that are more favorable than those found in the LECs' access tariffs. By contrast, in competitive markets, customers purchasing a service have the ability to select between or among suppliers, and suppliers have every incentive to offer the best combination of rates and terms to win the business of the purchasers.

As to transport and tandem rate elements, the Commission's patchwork of reforms of intercarrier compensation are leading to especially perverse results, because there are "alternative

---

[4] In fact, the Commission has generally prohibited IXCs from refusing to complete calls to a particular LEC due to intercarrier disputes. *In re Establishing Just & Reasonable Rate*, 22 FCC Rcd. 11629, ¶¶ 1, 5 (2007) ("*Call Blocking Declaratory Ruling*") ("[C]arriers cannot . . . block[] traffic to LECs allegedly engaged in [traffic pumping].").

In its recent *ILEC Non-Dominance Order*, the Commission decided that incumbent LECs should not be classified as "dominant" in the provision of switched access. Declaratory Ruling, Second Report and Order, and Order on Reconsideration, *Technology Transitions; USTelecom Petition for Declaratory Ruling That Incumbent Local Exchange Carriers Are Non-Dominant in the Provision of Switched Access Services*, GN Docket No. 13-5, FCC 16-90 (rel. July 15, 2016) ("*ILEC Non-Dominance Order*"). That finding, however, rested on the fact that the Commission would ultimately be "phasing out per minute charges for interstate . . . access" and thus that, under the Commission's partially revised regulatory regime, ILECs, like CLECs, would be unable to control prices. *Id.* ¶ 25; *see id.* ¶¶ 26-28. The Commission recognized that "*all* LECs" – both ILEC and CLECs – "have control over access to their own telephone subscribers," and thus (absent the Commission's regulatory regime) have the ability to impose rates and terms on IXCs. *See id.* ¶ 30.

tandem providers" that have "made significant inroads in the market," and in many markets have been found to be "effectively competing against the incumbents by winning a significant percentage of the tandem transit traffic in those states."[5] For example, Inteliquent (formerly Neutral Tandem), which claims to be the first competitive tandem service provider,[6] started in a few major markets in 2004 but has now expanded to "almost all markets in the contiguous United States, Hawaii, and Puerto Rico."[7] Inteliquent recently reported that competition in this market has "intensified"[8] and that it has "faced increasing direct competition from other competitive providers of voice services, including Level 3, Peerless Network, and Hypercube."[9] Level 3 has its own tandem network, which, according to one filing, consists of five regional tandems.[10] Another major competitor in the market is HyperCube (recently renamed West Telecom Services), which provides "facilities-based competitive tandem service[]" in 47 states and the District of Columbia.[11] Peerless Network is another provider of "tandem switched access services to other carriers, and local and access tandem services."[12] The company has invested "nearly $30 million in over 40 major markets across the country" and "provides a combined TDM and IP network connected to nearly every major domestic carrier offering call

---

[5] John R. Harrington, et al., *An Evaluation of the Proposals in the FCC's Intercarrier Compensation Reform Docket Related to Tandem Transit Services*, 61 Fed. Com. L.J. 325, 368-69 (2009).

[6] Inteliquent, Inc., 2015 10-K, at 3 (Feb. 18, 2016).

[7] *Id.*

[8] *Id.* at 4. According to one of its SEC filings, Inteliquent provides competitive tandem services in 189 of the 192 Local Access and Transport Areas ("LATAs") in the United States and Puerto Rico (all except Fishers Island and parts of the Navajo Nation). *Id.*

[9] *Id.* at 7.

[10] *See* Letter from J. Nakahata (counsel for Level 3) to M. Dortch (FCC), *Connect America Fund*, WC Docket No. 10-90, at 6 (April 15, 2013).

[11] Letter from M. Hazzard (counsel for HyperCube) to M. Dortch (FCC), *Access Charge Reform*, CC Docket No. 96-262, Attachment at 2 (June 12, 2009); West Corporation, 2015 10-K, at 18 (Feb. 18, 2016).

[12] Letter from to M. Dortch (FCC), *IP-Enabled Services*, WC Docket No. 04-36, at 2 (Sept. 8, 2008).

origination and termination services in over 100 LATAs (Local Access Transport Areas) and 30 MTAs (Major Trading Areas)."[13] Onvoy provides "over 65 points of interconnection in 30 states and is connected to all major IXCs."[14] Tandem Transit, LLC is an "IP alternative" that works as a "third party transit manager."[15]

Given that there are multiple willing suppliers of tandem and transport services, the Commission should move rapidly to dismantle its traditional rules, which inhibit competition that would bring market discipline to transport and tandem rates. In particular, much of the problem arises because, under the Commission's traditional rules, IXCs generally must pay properly tariffed and billed tandem and transport charges, but are not always clearly permitted to select the provider of those services or the most efficient means to transport traffic. This perverse economic relationship means that IXCs are often billed for inefficient and costly tandem and transport services, which they would not willingly choose if they could more freely select among competitive providers of tandem and transport services.

In the present circumstances, the most effective way to transition tandem and transport access services to bill-and-keep would be for the Commission to eliminate the rules that force IXCs to pay for services on terms dictated by LECs and that act as barriers to competition for these services. For example, if the Commission were to detariff all tandem switching and transport, and issue reasonable rules to define the "network edge,"[16] then the resulting

---

[13] Comments of Peerless Network, Inc., *Technologies Transitions Policy Task Force*, GN Docket No. 13-5, at 2(July 8, 2013).

[14] Onvoy, https://www.onvoy.com/products/tandem-transit.

[15] Tandem Transit, http://www.tandemtransit.com/it-news.html.

[16] *See USF/ICC Transformation Order*, ¶ 1320; Comments of AT&T, WC Docket No. 10-90, *et al.*, at Part III, pp. 51-74 (filed Feb. 24, 2012).

competitive market would in most cases be able to ensure that IXCs would not be charged unreasonable transport charges to carry traffic to the "edge."

The Commission's failure to begin the transition of originating access and the remaining transport charges to bill-and-keep is also likely deterring investment in broadband and the orderly transition to IP networks. *See id.* ¶ 820. The Commission's failure to eliminate these deterrents is especially acute given that the transport rates of some LECs can be indefinitely maintained, whereas some transport rates of some incumbent LECs in many circumstances will be transitioning to bill-and-keep in July 2018.

Third, because of the inefficiencies in the current, outdated system governing charges for originating access and transport services, the "arbitrage schemes" that have consistently plagued the intercarrier compensation regime remain a significant problem. *USF/ICC Transformation Order*, ¶¶ 9, 648. Although the Commission adopted rules that, in part, address "access stimulation," and that are designed to "curtail" it, *see id.* ¶¶ 648-700, in AT&T's experience, access stimulation remains rampant. Indeed, since 2011, *billions* of minutes of access traffic continue to be stimulated each year, and despite the Commission's reform efforts, the practice has not been curtailed in any meaningful way. As a consequence, ordinary customers of IXCs and wireless providers continue to subsidize users of the "free" calling services associated with the schemes – and to unjustly enrich the LECs and service providers perpetuating these schemes. *See id.* ¶¶ 663-64.

The unscrupulous carriers that have continued to engage in access stimulation have sought to rely on inflated transport charges to replace arbitrage revenues that were reduced because of the reforms the Commission made in 2011. Even as terminating end office access charges have declined under the Commission's transition to bill-and-keep, carriers have been

able to maintain, and even expand, access stimulation schemes by billing excessive transport, and "inflat[ing] the mileage used to compute the transport charges." *Id.* ¶ 820.[17] For example, since 2012, one carrier engaged in access stimulation has billed AT&T 192 miles of distance-sensitive transport charges on virtually every minute of traffic. Under the Commission's reforms, this carrier's end office charges per call have been reduced to 0.07 cents per minute, but the charges for the 192 miles of transport add about 0.60 cents per minute on each call. In other words, the existence of these transport charges increased the billed rate by over 300 percent.[18]

Arbitrage activities also affect originating access charges. To win business, some tandem providers are sharing a portion of the tandem and transport revenues, to the detriment of both ratepayers and competitors. *See id.* ¶¶ 663, 665, 666 ("excess [access] revenues that are shared in access stimulation schemes provide additional proof that the LEC's rates are above cost"). Likewise, some LECs are engaged in schemes to overcharge on wireless-originated traffic, such as 8YY. *See, e.g.*, *AT&T Services, Inc. v. Great Lakes Comnet*, 30 FCC Rcd. 2586 (2015), *pet.*

---

[17] When examining past access arbitrage schemes, the Commission has recognized that its own rules often encouraged such schemes. *E.g.*, *CLEC Access Reform Order*, 16 FCC Rcd. 9923, ¶¶ 28-34 (because, under the Commission's tariff regime, the access provider is not chosen by the IXC that pays the access cost, and because the IXC cannot pass on excessive access costs to entities that cause such costs, the CLECs have the "ability to impose excessive access charges"); *USF/ICC Transformation Order*, ¶¶ 688-90 (CLEC access stimulation schemes have flourished because CLECs were allowed to benchmark against small ILECs with high rates, even though the CLECs handled very large volumes of traffic). The same is still true today. Unscrupulous LECs can file tariffs with access rates that are not subject to negotiation, and IXCs often have little realistic opportunity to avoid the charges. Even though the Commission has capped the rates, these caps can be ineffective in addressing "mileage pumping" schemes, or excessive transport charges billed in association with access stimulation schemes.

[18] In the litigation with this carrier, AT&T has several defenses as to why these charges are inappropriate and unlawful, including that, under the Commission's access stimulation and benchmark rules, the carrier should be lowering its rate for transport to match the "direct connection" rate offered by the lowest-priced price cap carrier in the state. Although AT&T expects to prevail in that case, the point here is that the Commission's incomplete reforms of ICC have not adequately curtailed access stimulation schemes, and that such schemes continue to lead to expensive and protracted litigation disputes in courts and before the Commission. Although the Commission should continue to address such wrongdoing in case-by-case adjudication, it should also move forward with reforms that make these harmful arbitrage activities more difficult to initiate in the first place.

for review denied in part, granted in part, 823 F.3d 998 (D.C. Cir. 2016). As such, reform of originating access charges is important to prevent further proliferation of such arbitrage activities. In fact, arbitrage schemes are increasingly shifting to 8YY (as well as tandem-switching and transport) as the Commission's reforms of other elements proceed.

Because the partial reforms to the intercarrier compensation regime continue to perpetuate inefficient rates, and to allow access arbitrage schemes to flourish, the Commission should promptly act to set the transition for the remaining intercarrier compensation charges, and to revise its existing rules to allow competition to discipline intercarrier compensation. However, in the meantime, as explained below, the Commission should immediately forbear from two types of requirements for which there is no current need, and that adversely affect intercarrier compensation and competition.

III. STANDARD FOR FORBEARANCE

Under Section 10(a) of the Communications Act of 1934, as amended ("Act"), the Commission

> shall forbear from applying any regulation or any provision of this chapter to a telecommunications carrier or telecommunications service, or class of telecommunications carriers or telecommunications services, in any or some of its or their geographic markets, if the Commission determines that—
>
> (1) enforcement of such regulation or provision is not necessary to ensure that the charges, practices, classifications, or regulations by, for, or in connection with that telecommunications carrier or telecommunications service are just and reasonable and are not unjustly or unreasonably discriminatory;
>
> (2) enforcement of such regulation or provision is not necessary for the protection of consumers; and
>
> (3) forbearance from applying such provision or regulation is consistent with the public interest."

47 U.S.C. § 160(a).

Forbearance is mandatory when these three statutory criteria are met, and "there is a great deal of overlap in the three factors." *Verizon v. FCC*, 770 F.3d 961, 964 (D.C. Cir. 2014). Under the first two factors, to determine what is "necessary," the Commission has applied, and the courts have embraced, a test in which the Commission examined whether there is a "strong connection" between the rule and the agency's purpose. *See, e.g.*, *CTIA v. FCC*, 330 F.3d 502, 512 (D.C. Cir. 2003). More recently, the Commission has explained that there must be a "current need" to maintain a statutory requirement or a challenged regulation. *AT&T Cost Assignment Forbearance Order*, 23 FCC Rcd. 7302, ¶ 20 (2008); *Verizon*, 770 F.3d at 967.

As to the "public interest" determination, Section 10(b) of the Act provides that the Commission "shall consider whether forbearance from enforcing the provision or regulation will promote competitive market conditions, including the extent to which such forbearance will enhance competition among providers of telecommunications services." 47 U.S.C. § 160(b). Where forbearance promotes competition, the Commission can rely on that determination to "find[] that forbearance is in the public interest." *Id.*

Section 10(c) provides that a forbearance petition "shall be deemed granted" if the Commission does not deny the petition "within one year after the Commission receives it," or an additional 90 days if the Commission extends that original one-year period. 47 U.S.C. § 160(c). Under Section 10(c), to avoid a petition being deemed granted, "the Commission must, within the statutorily prescribed period, affirmatively find that at least one of the substantive prerequisites for forbearance is not satisfied." *Qwest Corp. v. FCC*, 689 F.3d 1214, 1226 (10th Cir. 2012). Further, given the statutory deadline, the Commission has recognized, and the courts have agreed, that under Section 10(c), "the Commission must attend promptly to forbearance petitions." *Id.*

IV. THE COMMISSION SHOULD FORBEAR FROM TARIFFING REQUIREMENTS FOR TANDEM SWITCHING AND TANDEM-SWITCHED TRANSPORT ACCESS CHARGES ON CALLS TO OR FROM LECs ENGAGED IN ACCESS STIMULATION.

The Commission should forbear from the tariffing requirements of the Act and its rules as to all tandem switching and tandem-switched transport charges on all traffic to or from LECs engaged in access stimulation under the Commission's rules.[19] As to access stimulation, the Commission's tariffing rules for tandem and transport access charges lead to unjust and unreasonable rates, harm consumers, and are contrary to the public interest. As a result, forbearance is required. *See* 47 U.S.C. § 160.

In 2011, the Commission concluded that access stimulation schemes had many "adverse effects." *USF/ICC Transformation Order*, ¶ 662. For example, as the Commission explained, "[a]ccess stimulation imposes undue costs on consumers, inefficiently diverting capital away from more productive uses such as broadband deployment." *Id.* ¶ 663. Because the Commission's rate averaging rules limit IXCs from passing on the higher access charges billed by a LEC engaged in access stimulation, "all customers of these long-distance providers bear these costs, even though many of them do not use the access stimulator's services, and, in

[19] *See* 47 C.F.R. § 61.3(bbb) (defining access stimulation). As explained by the Commission, access stimulation often occurs when "a LEC with high switched access rates enters into an arrangement with a provider of high call volume operations such as chat lines, adult entertainment calls, and 'free' conference calls. The arrangement inflates or stimulates the access minutes terminated to the LEC, and the LEC then shares a portion of the increased access revenues resulting from the increased demand with the 'free' service provider, or offers some other benefit to the 'free' service provider. The shared revenues received by the service provider cover its costs, and it therefore may not need to, and typically does not, assess a separate charge for the service it is offering. Meanwhile, the wireless and interexchange carriers (collectively IXCs) paying the increased access charges are forced to recover these costs from all their customers, even though many of those customers do not use the services stimulating the access demand." *USF/ICC Transformation Order*, ¶ 656. Additionally, access stimulation is sometimes paired with fraudulent schemes such as computer-generated calls that hang up in order to generate return calls, and SIM box fraud.

essence, ultimately support businesses designed to take advantage of today's above-cost intercarrier compensation rates." *Id.* ¶ 663.

The Commission further noted that, in access stimulation schemes, "consumers that do not use" the nominally "free" conferencing and adult chat line services "are forced to subsidize the customers that do" place calls to these conference and chat line services. *Id.* ¶ 657. Such access stimulation schemes also allow the LECs engaging in them to reap "inflated profits" that make their access rates "unjust and unreasonable" under the Act. *Id.*

The Commission estimated that the size of the implicit subsidies paid by long distance ratepayers arising from access stimulation schemes was between $330 and $460 million per year, *id.* ¶ 664, but rather than eliminate the schemes and the subsidies entirely, the Commission elected to reduce "the extent" of the subsidy. *Id.* ¶ 657. It thus required any carrier engaged in "access stimulation" – which the Commissioned defined in its rules – to revise its tariffed access charges. Incumbent LECs were required to refile their tariffs using more accurate data, and CLECs were required to benchmark their access rates to the rates charged by the lowest-price price cap LEC in the state. *Id.* ¶¶ 667-91.

The Commission recognized that these changes in its rules would "not entirely eliminate the potential for access stimulation." *Id.* ¶ 690. However, it observed that "the reforms we adopt elsewhere in this Order will, over time, further reduce intercarrier payments and the incentives for this type of arbitrage," *id.*, and that such schemes will be "curtail[ed]." *Id.* ¶¶ 33, 648. In other words, because the Commission was transitioning terminating end office access charges to a bill-and-keep regime by 2018, it expected that LECs engaged in access stimulation would abandon these access stimulation schemes because the access revenues that they had been generating would be reduced.

However, the unscrupulous carriers engaged in access stimulation had other ideas. As noted above, while some carriers (but not all) complied with the new requirements by lowering their end office switching rates, these carriers attempted to recoup the resulting lost revenues by assessing high per-minute, per mile transport charges. They also refused to offer direct trunking to their end offices, which would have allowed IXCs to avoid most or all of the transport charges – even though the price cap LECs to which these carriers are benchmarked have long offered such flat-rated transport options.[20] As such, access stimulation LECs have been able to continue their schemes by billing inflated transport charges, which are not currently subject to any transition to bill-and-keep. Further, rather than "curtail" their access stimulation schemes, these carriers have expanded their activities: access stimulating LECs are, by traffic volume, the largest carriers in Iowa and in South Dakota, and the largest LECs engaged in access stimulation in these two states each carry between three to eight times the traffic volume of the largest price cap LEC in each state, even though they have far fewer switches and other network facilities.

The case for forbearance of the tariffing requirements for transport and tandem charges for calls to and from access stimulating LECs is simple, straightforward, and compelling.[21] *First*, tariffing of transport and tandem charges on calls to or from access stimulating LECs is not

[20] In adjudications with these carriers, AT&T has asserted that the failure of these access stimulating LECs to offer such direct connections violates the Act and the Commission's existing rules. As explained above, however, even though such direct connections are required by law, it is still important for the Commission to forbear from its tariffing rules to address the harms arising from continued access stimulation schemes. Establishing direct connections is an imperfect solution for ratepayers, as doing so does not eliminate the incentives that drive the growth in such schemes. Without forbearance, access-stimulating parties could simply shift their traffic to carriers that continue to offer high tariffed charges for tandem-switching and transport.

[21] The forbearance sought applies to all LECs. Thus, even if a LEC is not itself engaged in access stimulation, a LEC may not lawfully tariff (or bill pursuant to a tariff) for transport or tandem access charges for any calls to or from a LEC engaged in access stimulation. In many cases, the excessive tandem and transport charges are being billed by an intermediate carrier that may not have direct contractual arrangements with a provider of free calling services. Nevertheless, once forbearance is granted, such LECs could not lawfully tariff tandem or transport charges for any traffic routed to or from a LEC engaged in access stimulation.

necessary to ensure that access rates (or any other rates) are "just and reasonable.: 47 U.S.C. § 160(a)(1). To the contrary, the Commission already has concluded that, when LECs engage in access stimulation schemes, the "significant increases in switched access traffic," without a corresponding drop in access rates, results in "inflated profits that almost uniformly make the LEC's interstate switched access rates *unjust and unreasonable*." *USF/ICC Transformation Order*, ¶ 657 (emphasis added). Although the Commission has reduced the terminating end office rates that access stimulating LECs could lawfully tariff, these LECs responded by increasing both their traffic volumes and their transport charges (or shifted toward originating access schemes). As such, nearly five years after the Commission acted to curb this abuse, LECs engaged in access stimulation continue to reap "inflated" overall profits through access charges that remain unreasonable.[22]

Second, tariffing of transport and tandem charges on calls to or from access stimulating LECs is not necessary "for the protection of consumers." 47 U.S.C. § 160(a)(2). Here again, in 2011, the Commission already examined in detail the effect of access stimulation schemes on consumers, and it concluded that such schemes "impose[] undue costs on consumers." *USF/ICC Transformation Order*, ¶ 663. Specifically, the Commission explained that consumers that do not use the free calling services associated with LECs' access stimulation schemes – such as adult chat lines – are "forced to subsidize" the users of such services, as well as the access stimulating LECs. Even after the Commission's reforms, consumers are *still* paying such

[22] Further, detariffing would not mean that access stimulating LECs would be free from all federal regulation. To the contrary, the Commission would continue to regulate the terms of any intercarrier compensation under the Act. Thus, while LECs would be able, consistent with the Commission's overall approach to intercarrier compensation reform, to arrange for the receipt of compensation via express, negotiated agreements (*USF/ICC Transformation Order*, ¶ 812), such agreements would still be subject to a uniform, national regime. As such, the Act and the Commission's scheme would provide the exclusive means of compensation for tandem-switching and transport service (or any access service). Accordingly, LECs cannot recover under alternate state-law theories, and any attempts by states to directly or indirectly regulate intercarrier compensation would be preempted.

subsidies: previously, the subsidy consisted of both end office and transport access charges, whereas now it consists primarily of transport access charges, which are not fully subject to the Commission's transition to bill-and-keep. *See supra* page 10 (discussing carrier that charges about 0.60 cents per minute in transport access charges). There has never been any credible evidence that tariffed charges for access stimulation schemes are needed to protect consumers. *See USF/ICC Transformation Order* ¶ 666 (rejecting claims that access stimulation is an appropriate way to finance "economic development" or "expansion of broadband services" in rural communities).

Third, forbearance from the tariffing of transport and tandem charges on calls to or from access stimulating LECs is "consistent with the public interest." 47 U.S.C. § 160(a)(3). When the Commission addressed access stimulation in 2011, it concluded that it has many "adverse effects" and that it was a "wasteful arbitrage practice[e], which cost[s] carriers and ultimately consumers hundreds of millions of dollars annually." *USF/ICC Transformation Order*, ¶¶ 33, 662. The Commission further found that "[a]ccess stimulation also harms competition." *Id.* ¶ 665. This is because the "free" calling partners of the access stimulating LECs, due to their share of the inflated access charge revenues, are given a "competitive advantage over companies that charge their customers for the service." *Id.* For the reasons described above, these public interest harms to consumers and to competition have not been eliminated by the Commission's prior efforts to limit "the extent" of the harm arising from access stimulation.

In this regard, it is important to point out that the reason that the Commission declined in 2011 to detariff CLEC access charges related to access stimulation traffic was because it "expect[ed]" that its reforms "will reduce the effects of access stimulation significantly, and the intercarrier compensation reforms we adopt should resolve remaining concerns." *Id.* ¶ 692.

Unfortunately, the reforms have not materially reduced the harmful effects of access stimulation. And, because the Commission has not yet put in place a plan for a complete transition to bill-and-keep for transport rate elements, there remains a substantial opportunity for LECs to engage in access stimulation by billing excessive mileage charges.[23] The continued billing of these tariffed transport charges on calls to and from access stimulating LECs causes unreasonable rates, harms consumers and competition, and is not consistent with the public interest. Accordingly, forbearance is required under the statute.

V. THE COMMISSION SHOULD FORBEAR FROM RULES THAT PERMIT CHARGES FOR 8YY DATABASE DIPS.

The Commission should also forbear from its rules that permit LECs to tariff and assess per query database dip charges on toll-free calls.[24] These queries enable a LEC to identify the IXC to which a toll-free call should be routed. When the Commission initially authorized the charges associated with these database queries, it concluded that the "costs associated specifically with 800 data base access will be relatively modest."[25] In fact, at least one LEC conceded that "800 data base costs are so low that a non-recurring rate element could be used to recover them."[26] The Commission nevertheless permitted incumbent LECs to tariff a separate database dip charge, priced on a per query basis, emphasizing that the rates for the database access (which at that time were set on a rate of return basis) must be "based only on their data-

[23] Further, and in any event, the Commission in its prior proceeding was exercising its discretion in a rulemaking, and was not evaluating forbearance, which is governed by the specific statutory criteria in Section 10 of the Act.

[24] *See* App. A (listing rules). The Commission also authorized a separate tariffed charge for access to the Service Management System (SMS), which is now managed and billed by SMS 800, Inc. *See In the Matter of Toll Free Service Access Codes*, 28 FCC Rcd 15328 (2013). Nothing in this Petition affects those services. Nor does the Petition affect any rules for unbundling of access to databases. The Petition concerns only the database query charges that LECs tariff and bill to IXCs on toll-free calls.

[25] Report and Order, *In the Matter of Provision of Access for 800 Service*, 4 FCC Rcd. 2824, ¶ 73 (1989) ("*800 Report and Order*").

[26] *Id.* n.147.

base-specific costs."[27] If a LEC did not itself own the equipment needed to query the toll-free database, then it could "purchase query service from another LEC that has a regional data base."[28]

Today, an unusual and disturbing pattern has emerged with respect to the pricing of toll-free database queries – which, under the Commission's current regime, IXCs offering toll-free services have no choice but to accept and purchase at a LEC's tariffed rate. As to the charges tariffed by LECs and billed to captive IXCs, there is a wide variation in the tariffed charges for toll-free database queries billed by LECs.[29] However, as noted above, LECs have the ability to purchase the query service from wholesale service providers, pursuant to negotiated contracts. Based on AT&T's review of the prices charged in that market for database queries, the prices for such services are generally (i) more uniform; and (ii) lower than the tariffed rates billed by many LECs. These data raise questions as to whether Commission's rules are adequately constraining the price of toll free database queries, particularly those being billed by CLECs involved in access stimulation.

---

[27] *Id.* ¶ 74; *see* 47 C.F.R. § 69.118. The Commission later transitioned the charges to the price cap regime. Second Report and Order, *In the Matter of Provision of Access for 800 Service*, 8 FCC Rcd. 907 (1993). The Commission apparently has never expressly authorized competitive LECs to impose a database query charge, but virtually all CLECs do so. Further, when the Commission imposed a "benchmark" system to limit the access charges CLECs could impose on IXCs, the Commission declined to include toll-free database query charges within its benchmark rules, although the Commission explained that CLECs should "not look to this category of tariffed charges to make up for access revenues." *CLEC Access Charge Reform Order*, n.128.

[28] Report and Order, *In the Matter of 800 Data Base Access Tariffs*, 11 FCC Rcd. 15227, ¶ 9 (1996) ("*800 Database Query Tariff Investigation Order*").

[29] *Compare* Advanced Comm'cns Tech., Inc., Tariff F.C.C. No. 1, 1st Rev. Page 7-5 (incorporating NECA FCC Tariff No. 5 rate, which is $0.0057); Birch Comm'cns, Tariff FCC No. 1, Orig. Sheet 57 ($0.0075); Frontier Tel. Cos., Tariff FCC No. 1, Orig. Page 20-10 ($0.01047977); *and* XO Comm'cns, LLC, Tariff FCC No. 1, 3rd Rev. Page 162 ($0.011), *with* Ameritech Operating Cos., Tariff F.C.C. No. 22, 27th Rev. Page 228 ($0.002304), *and* Sw. Bell Tel. Co., Tariff F.C.C. No. 73, 22nd Rev. Page 6-209 ($0.002531).

As the Commission has long recognized, there is an obvious incentive for CLECs, absent regulation, to use the tariff rules "to impose excessive access charges on IXCs and their customers." *See CLEC Access Charge Reform Order*, ¶ 2. Moreover, when the Commission initially imposed a "benchmark" system to limit the access charges CLECs could impose on IXCs, it declined to include toll-free database query charges within its benchmark rules, although it did counsel the CLECs "not look to this category of tariffed charges to make up for access revenues." *Id.*, n.128. Based on the current pricing in some CLEC tariffs, that warning does not appear to have been effective. Indeed, it is evident that some CLECs have tariffed toll-free database query charges that are not just and reasonable, and that are in excess of the rates imposed by other LECs.[30]

Under these circumstances, the Commission should forbear from all of its rules that allow LECs to tariff a charge billed to IXCs for toll-free database queries.[31] Those rules include the specific provisions in Part 69 that authorize the per query database charges, as well as Section 203 and the Commission's tariffing rules that permit the toll-free database query charges to be imposed via tariff. All three of the statutory criteria for forbearance are met.

First, enforcement of these rules is not necessary to ensure that charges for toll-free services are just and reasonable, or to protect consumers. 47 U.S.C. § 160(a)(1), (2). To the contrary, the current regulatory regime creates the opposite incentive by allowing for wide variations in toll free database query charges, and the LEC tariffed rates at the high end of the

[30] When the Commission examined the reasonableness of toll-free database query charges in 1996, it found that some LECs offered the service for as low as $0.0022, and that the mean rate charged by all LECs was $0.0044. *800 Database Query Tariff Investigation Order*, ¶ 14.

[31] *See* App. A.

range are not just or reasonable.[32] If IXCs had a choice of providers for these queries – as the providing LECs do – then these current high rates could not be sustained.[33]

Most notably, if the costs of toll-free database queries are not forcibly passed on to IXCs and toll-free customers via tariffs, and existing competitive market forces are permitted to operate, then the resulting "market discipline" will work to reduce overall costs of such queries, by giving LECs "appropriate incentives to serve their [own end-user] customers efficiently." *USF/ICC Transformation Order* ¶ 742. By contrast, under the current regime, LECs have no incentive to provide database queries to IXCs at an efficient, market based price, because their tariffed charges are "not . . . subject to competitive discipline." *Id.* Indeed, under the current system, toll-free customers – because they absorb all of these costs through often-inflated tariffed query charges – are paying an "opaque implicit subsidy," which the Commission has pledged to eliminate. *Id.* ¶ 738.

Forbearance from toll free database queries is also consistent with the Commission's statements concerning cost causation. *See id.* ¶¶ 744-45. While the original purpose of a toll-free call may have been to allow the calling party to avoid per-minute long distance charges, and

---

[32] As the Commission has explained, as to toll-free calls, "the role of the originating LEC is more akin to the traditional role of the terminating LEC in that the IXC carrying the 8YY traffic must use the access service of the LEC subscribed to by the calling party. Stated differently, in the case of 8YY traffic, because the calling party chooses the access provider but does not pay for the toll call, it has no incentive to select a provider with lower originating access rates." *USF/ICC Transformation Order*, ¶ 1303.

[33] *Cf. CLEC Access Charge Reform Order*, ¶ 37 ("it is highly unusual for a competitor to enter a market at a price dramatically above the price charged by the incumbent, absent a differentiated service offering").

Although, in theory, the Commission could refine its rules for database queries to eliminate the high rates, or set some type of market-based benchmark that would act as a ceiling on toll-free database queries, such action would be inconsistent with the Commission's transformation to a bill-and-keep regime for intercarrier compensation. *See USF/ICC Transformation Order*, ¶ 736-37. As the Commission explained, under bill-and-keep, "a carrier generally looks to its end users – which are the entities and individuals making the choice to subscribe to that network – rather than looking to other carriers and their customers to pay for the costs of its network." *Id.*¶ 737. That methodology "has significant policy advantages," and the Commission can rely on those advantages to ensure that ratepayers are not harmed.

instead have the toll free customer pay the IXC for the long distance service, the Commission has now recognized that when any call is completed, "both parties generally benefit, . . . and therefore, [] both parties should split the cost of the call." *Id.* ¶ 744. That is what would occur on toll-free calls if the Commission forbears from its rules so that LECs would no longer be entitled to bill toll-free database queries in tariffs: originating LECs and their end users will be responsible for the costs of routing a toll-free call to the appropriate IXC (including the database query cost), and the called party (the toll-free customer) will continue to pay for the market-based costs associated with carrying the call from the originating LEC to the customer's equipment. After forbearance from tariffing of toll-free database query charges, rates for toll-free service should decrease, because that market has long been intensely competitive, and the elimination of high query charges that IXCs would not have voluntarily paid will be passed onto to consumers of toll-free services. *See id.* ¶ 748.

Second, for many of the same reasons, forbearance from rules allowing toll-free database queries is consistent with the public interest. 47 U.S.C. § 160(a)(3). As stated above, toll-free database query charges assessed on IXCs are not subject to any market discipline, were untouched by the Commission's past access reform orders, and the Commission's current rules provide no incentives for many LECs to reduce their costs. By contrast, wholesale providers of database query charges are subject to competitive pressures, and, as a consequence, their query rates are generally lower than those charged by many LECs. Forbearance will force all LECs to innovate and reduce costs because of competitive pressures, *see USF/ICC Transformation Order*, ¶¶ 742, 745, 750, and under Section 10(b), "forbearance is in the public interest" when – as here – "forbearance will promote competition among providers of telecommunications

service." 47 U.S.C. § 160(b). If forbearance is granted, LECs that innovate and find more efficient methods of querying the database will be able to reduce prices to their end users.

Notably, in 2013, when the Commission addressed changes to the administration of the SMS tariff that allows access to toll-free numbers, at least two Commissioners recognized that the Commission's regulations pertaining to toll-free numbers had not kept pace with changes in the marketplace.[34] Commissioner Clyburn (who was then acting Chairwoman) stated that use of toll-free numbers "has changed dramatically" since the Commission's applicable rules were put in place, and that the Commission should make "changes in[] our regulations so that they more closely reflect the current marketplace." Clyburn Statement, 28 FCC Rcd 15328 at 15349. And Commissioner Pai noted that as, to regulation of toll-free services, "there is still more to be done," and that it is "past time to reexamine" the Commission's pre-1996 Act decisions about toll-free services. Pai Statement, 28 FCC Rcd. at 15350. Commission Pai in particular recommended re-examination of whether toll-free numbers should be tariffed, "[g]iven that tariffs are going the way of the dodo," and he urged the Commission to "restructure [its] rules to better reflect [its] statutory authority and marketplace realities." *Id.* The conclusions of these Commissioners are equally applicable to the Commission's rules regarding LECs' tariffed database query charges for toll-free services.

For these reasons, the elimination of tariffed toll-free database queries forcibly imposed on IXCs and their toll-free customers would reduce rates, protect ratepayers, and promote competition to provide efficient database query services. As such, under Section 10 of the Act, forbearance is mandatory.

---

[34] *See* Separate Statement of Acting Chairwoman Mignon Clyburn, *In the Matter of Toll Free Service Access Codes*, 28 FCC Rcd 15328, 15349 (2013) (Clyburn Statement); *id.* at 15350 (Statement of Commissioner Ajit Pai).

CONCLUSION

For the foregoing reasons, the Commission is required to forbear from the two types of requirements identified above and in Appendix A. In addition, the Commission should take prompt action to complete intercarrier compensation reform.

Michael J. Hunseder
E. Benton Keatley
Sidley Austin LLP
1501 K Street, NW
Washington, D.C. 20005
(202) 736-8000 - telephone
(202) 736-8711 - facsimile

Christi Shewman
Gary L. Phillips
David L. Lawson
AT&T Services, Inc.
1120 20th Street, NW
Suite 1000
Washington, D.C. 20036
(202) 457-3090 - telephone
(202) 463-8066 - facsimile

September 30, 2016

Attorneys for AT&T Services, Inc.

APPENDIX A

Pursuant to Section 1.54 of the Commission's rules, 47 C.F.R. § 1.54, AT&T states that it seeks forbearance from the statutory provisions, rules, or requirements set forth in the table below.

47 C.F.R. § 1.54(a)(1)

Statutory Provisions, Rules, or Requirements Addressed In Part IV of the Petition	**As Applied to**
Section 203 of the Communications Act of 1934, as amended ("Act"), to the extent that it requires carriers to file tariffs for charges for tandem-switching and transport charges on calls to or from local exchange carriers ("LECs") engaged in access stimulation, as defined in 47 C.F.R. § 61.3(bbb); 47 U.S.C. § 203.	All LECs, including intermediate LECs and centralized equal access ("CEA") providers, on calls originated by or terminated to LECs engaged in access stimulation, as defined in 47 C.F.R. § 61.3(bbb)
Part 61 of the Commission's rules, to the extent that it allows for the tariffing of charges for tandem-switching and transport on calls to or from local exchange carriers engaged in access stimulation, as defined in 47 C.F.R. § 61.3(bbb), including but not limited to sections 61.26 and 61.47; 47 C.F.R. §§ 61.1 *et seq.*	All LECs, including intermediate LECs and CEA providers, on calls to or from LECs engaged in access stimulation, as defined in 47 C.F.R. § 61.3(bbb).
Part 69 of the Commission's rules, to the extent that it allows for the tariffing of charges for tandem-switching and transport on calls to or from local exchange carriers engaged in access stimulation, as defined in 47 C.F.R. § 61.3(bbb), including but not limited to sections 69.108 and 69.111; 47 C.F.R. §§ 69.1 *et seq.*	All LECs, including intermediate LECs and CEA providers, on calls to or from LECs engaged in access stimulation, as defined in 47 C.F.R. § 61.3(bbb).
Subpart J of Part 51 of the Commission's rules, to the extent that it allows for the tariffing of charges for tandem-switching and transport on calls to or from local exchange carriers engaged in access stimulation, as defined in 47 C.F.R. § 61.3(bbb), including but not limited to section 51.913; 47 C.F.R. §§ 51.901 *et seq.*	All LECs, including intermediate LECs and CEA providers, on calls to or from LECs engaged in access stimulation, as defined in 47 C.F.R. § 61.3(bbb).
Statutory Provisions, Rules, or Requirements Addressed In Part V of the Petition	**As Applied to**
Section 203 of the Act, to the extent that it requires carriers to tariff charges for 800 database access on a per-query basis; 47 U.S.C. § 203.	All LECs, including intermediate LECs and CEA providers.
Part 61 of the Commission's rules, to the extent that it allows for carriers to tariff charges for 800 database access on a per-query	All LECs, including intermediate LECs and

basis, including but not limited to section 61.47; 47 C.F.R. §§ 61.1 *et seq.*	CEA providers.
Part 69 of the Commission's rules, to the extent that it allows for carriers to tariff charges for 800 database access on a per-query basis, including but not limited to section 69.118; 47 C.F.R. § 69.118 *et seq.*	All LECs, including intermediate LECs and CEA providers.
The Commission's orders, to the extent that they require or allow carriers to tariff charges for 800 database access on a per-query basis, including but not limited to *In re Provision of Access for 800 Service*, 8 FCC Rcd. 907 (1993)	All LECs, including intermediate LECs and CEA providers.

47 C.F.R. § 1.54(a)(2)

AT&T requests that this forbearance relief be applied as a class to each carrier or group of carriers, and as specified for each provision, as set forth in the table above.

47 C.F.R. § 1.54(a)(3)

AT&T requests that this forbearance relief be applied to the services as set forth in the table above.

47 C.F.R. § 1.54(a)(4)

AT&T requests that this forbearance relief be applied in all regions across the entire United States and all territories.

47 C.F.R. § 1.54(a)(5)

Not applicable.

47 C.F.R. § 1.54(c)

Pursuant to Section 1.54(c) of the Commission's rules, AT&T states that it has taken positions in the following proceedings regarding relief that is comparable to the relief sought in this petition: *In re Connect America Fund*, WC Docket No. 10-90 *et al.*

47 C.F.R. § 1.54(e)(3)(i)

The scope of relief sought is set forth in the table above.

47 C.F.R. § 1.54(e)(3)(ii)

Not applicable.

47 C.F.R. § 1.54(e)(3)(iii)

Not applicable.

Exhibit 5

Referral Order, *INS v. AT&T Corp.*, No. 14-3439 (D.N.J. Aug. 4, 2016)

UNITED STATES DISTRICT COURT
FOR THE DISTRICT OF NEW JERSEY

IOWA NETWORK SERVICES, INC. Plaintiffs, v. AT&T CORP., Defendant.	Civil Action No.: 14-cv-03439 (PGS) MEMORANDUM ORDER

This matter is before the Court on two motions brought by Plaintiff, Iowa Network Services ("INS"): 1) Motion to Dismiss Counterclaims under Rule 12(b)(6) (ECF No. 12) and 2) Motion for Summary Judgment on Plaintiff's Tariff Claims (ECF No. 26). There is also a threshold issue presented, which is whether the doctrine of primary jurisdiction warrants referral of one or more of the issues in this matter to the Federal Communications Commission ("FCC"). The primary jurisdiction issue was raised in a July 6, 2015 letter to the Court by defendant AT&T, and the Court considers same as a motion to stay and refer the matter to the FCC.

I.

Defendant AT&T is a provider of long distance telecommunications services to all states. Plaintiff Iowa Network Services ("INS") provides telecommunication services known as Central Equal Access ("CEA") services within Iowa. AT&T transports telecommunication traffic to and from local telephone companies that serve end user customers. To transport communication traffic to end users in rural Iowa, AT&T delivers traffic to INS, then INS sends or switches the traffic to its network or the network of other local telephone companies who then, in turn, deliver the call to the end user. For INS

services, INS charges AT&T a fee set forth in a tariff filed with the FCC (discussed below).

AT&T has denied that any fees are owed to INS, and has filed counterclaims alleging that INS's operational practices in imposing tariffed rates for CEA service violate several provisions of the Federal Communications Act ("Communications Act"), including those provisions proscribing unjust and unreasonable practices. Generally speaking, AT&T alleges that INS operates contrary to the FCC's authorization by allegedly violating the Communications Act in the following ways: (1) INS has refused to comply with certain FCC rate caps; (2) INS has channeled most of its traffic through rural local exchanges. The critical facts underlying the two contentions are that these rural exchanges are authorized to charge higher tariff rates, and as a result, the cost of the services to AT&T substantially rises, even though INS could have more effectively routed the call through local exchanges whose rates were lower. This practice is referred to as "access stimulation."[1] AT&T alleges that, in order to stop access stimulation, the FCC capped such rates for those charges in 2011 (*See* Connect America Fund Order).

To determine whether primary jurisdiction of the FCC should be involved, the Court undertook a more in depth review of the counterclaim. The alleged facts below are derived primarily from the Counterclaims unless otherwise specified and are presumed to be true for the purposes of the motion to dismiss:

1. Access Services

According to the counterclaim, INS provides a service known as "exchange access" or more specifically, "switched access." ECF No. 9 (Counterclaims) ¶¶ 19-29. "Switched access" is offered by

1 As discussed *infra*, "access stimulation" involves routing large volumes of calls to rural areas to take advantage of the higher rural rates for access services.

local exchange carriers ("LECs") to long distance carriers (also known as interexchange carriers or "IXCs") to complete long distance calls. *Id.* ¶ 20. An LEC can be classified generally as an "incumbent" LEC (referred to herein as "ILEC"), which is the traditional provider of telephone services in a local exchange, or a "competitive" LEC ("CLEC"), which is a new entrant to the local telephone market. *Id.* ¶ 20. The LECs provide switch access services to IXCs pursuant either to tariffs or express contracts. *Id.*

The counterclaims provide the following example of how a long distance call is completed through these carriers: On a traditional long distance call, a caller places a call from, for example, Des Moines, IA to a friend in, for example, Chicago IL. The caller's local Iowa phone company accepts the outgoing call at a local switch that connects the caller's premises to its network, carries the call over the local network, and eventually hands off the call in or near Des Moines to the caller's selected long distance company. The long distance company (*i.e.*, the IXC) carries the call over its national network to a location near Chicago, and hands it off to a local phone company (an LEC) near Chicago that serves the called party. That Chicago LEC routes the call over its local network, including to a local "end office" switch that is directly connected to the called party's premises in Chicago, and the long distance call is completed. Counterclaims ¶ 21. In this example, the LEC that originated the call in Des Moines will assess an "originating" switch access charge on the IXC, and similar charges will be billed to the IXC for the "terminating" end of the call by the LEC in Chicago.

In the most basic scenario, the IXC establishes a "direct connection" with an LEC. This type of arrangement is used in areas where the IXC and the LEC exchange a large volume of traffic. However, with smaller LECs, there may be insufficient traffic to justify a direct connection with a particular IXC's network, and the carriers may exchange traffic indirectly through another provider. *Id.* at ¶ 27. This "indirect" calling arrangement is approved by the FCC for use in Iowa and a few other states where

competition for long distance services is developing. In order to successfully complete long distance traffic through indirect exchanges, a "centralized equal access" ("CEA") provider is utilized, and approved by the FCC. Because each remote ILEC had insufficient traffic volume to connect directly with each competing IXC, the remote ILECs cooperatively formed a CEA provider to transmit by long distance service to LEC. *Id.* ¶ 28. The CEA provider should provide the services at a less costly rate due to economies of scale by handling larger volumes of access traffic. *Id.* Such CEA rates are provided by a tariff approved by the FCC.

2. INS

INS was formed in 1987 by approximately 130 rural LECs to provide transport and other access services on behalf of the rural LECs. *Id.* ¶ 29. INS was approved to provide CEA services and has deployed tandem switching and transport facilities in order to offer equal access to multiple competitive IXCs at a single centralized location. *Id.* ¶J 29, 32. At that time (*i.e.*, prior to the Telecommunications Act of 1996, which opened up local telephone service competition), there was only a single provider of local telephone service in a given area; there were no CLECs at that time. *Id.* ¶ 30. Also at that time, prices for services offered by LEC were determined by "rate of return" regulation, which examined a carrier's reasonable costs and demand, and then rates were set to achieve a reasonable rate of return. *Id.* ¶ 31.

INS offers a particular package of access services; specifically, INS offers access to a centralized telephone facility (called a "switch") in Des Moines, Iowa, and a network to transport calls across Iowa. *Id.* ¶J 34-3 5. INS hands off the long distance calls to or from rural LECs, who use their own facilities to terminate or originate the calls placed to end user customers, and these carriers impose their own access charges on AT&T. See *id.* ¶ 2 1-22. Specifically, call routing works as follows:

> [W]hen a customer of an IXC places a long distance call to a customer of one of the LECs that uses INS, the IXC carries the call over its network to INS's switch in Des Moines, and hand off the call to INS. INS then transports the call to a point on its fiber network that is close to the local facilities of the rural LEC. The rural LEC then picks up the call and transports it to the called party within its authorized local exchange.

Id. ¶ 34. INS generally charges the IXCs a flat, per minute rate for each call. *Id.* ¶ 35.

3. Access Stimulation

The counterclaims describe an alleged "scheme" referred to "access stimulation." *Id.* ¶ 10. Under this "scheme," a remote LEC, which charges higher rates for access services under the FCC's rules, partners with a company that has less expensive rates due to its generation of a great deal of traffic through free calling services. *Id.* As a result of this "traffic-pumping," there is a sharp increase in the call traffic coming over the IXCs to the remote LECs and a sharp increase in the fees incurred by the IXC. *Id.* ¶11. According to the Counterclaims, such traffic in Iowa would typically be routed over INS's transport ring. *Id.* ¶ 10.

AT&T claims that as a result of access stimulation practices, the mix of traffic that INS carries has changed significantly. Formerly, nearly all of the traffic transported by INS involved the aggregation of small volumes for each of the ILECs connected to INS. Presently, it is alleged that about 89% of the traffic handled by INS consists of traffic from CLECs engaged in access stimulation. *Id.* ¶ 39.

4. FCC Price Caps

The access services provided by LECs are regulated by the FCC. In 2011, the FCC created several new rules with respect to pricing, and capped all interstate access rates that were in effect at the time. See *In re Connect America Fund*, 26 FCC Rcd. 17663, ¶ 18 ("Connect America Order"), petitions for review denied sub nom. *In re FCC, 11-161*. 753 F.3d 1015 (10th Cir. 2014). LECs were also required

over time to reduce access rates for intrastate calls to the same level as interstate calls. The parties' briefing as well as this memo refers to these rules at "rate caps."

5. AT&T's Dispute With INS

According to AT&T, after INS filed its tariffs with rates that AT&T claims exceeded the rate caps set by FCC rules, AT&T disputed INS's charges pursuant to the billing dispute provisions in INS's tariff. *Id.* ¶ 54. AT&T also began withholding payment on certain charges, but continues to pay INS some of the amounts it has billed based upon AT&T's own estimate of what the lawful charges should be. *Id.* Nevertheless, AT&T claims it has paid millions of dollars in charges associated with access stimulation of which it contends should be refunded. *Id.* ¶ 55.

In this lawsuit, AT&T alleges that INS and the Iowa LECs that engage in access stimulation, have engaged in unreasonable, anticompetitive and unlawful practices by (1) conspiring to refuse to allow AT&T to use more efficient means to transport access stimulation traffic such as a direct connection with the LEC, and (2) insisting that AT&T route traffic through INS. AT&T seeks damages as well as declaratory and injunctive relief. Count I of the Counterclaims alleges a violation of 47 U.S.C. § 201(b), which states that "[a]ll ... practices ... in connection with communications service[] shall be just and reasonable[] and any ... practice ... that is unjust or unreasonable is declared to be unlawful. AT&T alleges that INS raised its interstate switched access rates above the cap established by the FCC and failed to reduce its intrastate switched access services as allegedly required by FCC rules. Count II alleges that INS violated 47 U.S.C. § 203, because, according to AT&T, IN S's tariffs were not lawfully filed and do not comply with FCC regulations. Thus, Counts I and II allege that, because the FCC's regulations setting the rate caps lawfully implement the requirements in Sections 201(b) and 203 of the Act that a carrier's rates for services that appear in tariffs are just and reasonable, INS's filing of a tariff

with above-cap rates allegedly constitutes a violation of Sections 201(b) and 203. Count III is an alternative claim alleging that if INS is determined not to be an LEC, and, as a result, not subject to the FCC's rate caps, then it is an unreasonable practice in violation of Section 201(b) for INS to seek to collect tariffed access charges, because only LECs can provide and tariff switched access services. Count IV allege that INS acted unlawfully by entering into a CEA participation agreement with an LEC, Great Lakes Communication Corporation ("Great Lakes") and providing indirect interconnection with AT&T. Count V is a declaratory judgment claim asking that the Court declare that INS is subject to the FCC's rate caps, its existing tariff violates the caps, and AT&T is not required to pay bills that contain the unlawful tariff rates. Count VI is a declaratory judgment claim in which AT&T seeks an order declaring that INS is not the exclusive provider of transport services to CLECs.

INS has moved to dismiss the Counterclaims. After that motion was fully briefed and pending, INS moved for summary judgment on the claims in the complaint.

In order to analyze the primary jurisdiction issue, the Court must decide whether the counterclaims set forth a claim upon which relief may be granted. However, the Court will first briefly address Plaintiff's motion to summary judgment.

II.

Plaintiff has moved for summary judgment on all of the claims its complaint. AT&T has opposed the motion on both substantive as well as procedural grounds, including the fact that virtually no discovery has taken place in this matter to date. As the Third Circuit recently held, "[i]f discovery is incomplete, a district court is rarely justified in granting summary judgment, unless the discovery request pertains to facts that are not material to the moving party's entitlement to judgment as a matter of law." *Shelton v. Bledsoe*, 775 F.3d 554, 568 (3d Cir. 2015). In the instant matter, the parties have served

discovery requests but discovery was stayed before responses were served because Plaintiff filed the motion to dismiss. AT&T alleges that it seeks discovery essential to refuting INS's claims relating to agreements between INS and any access-stimulating LEC, revisions to INS's rates, INS's submissions to FCC, the services described in the complaint, billing records, and documents referring to INS as a rate-of-return carrier. Without this discovery, AT&T is prejudiced in responding to INS's summary judgment motion. As such, Plaintiff's motion for summary judgment is denied without prejudice.

The Court now turns to Plaintiff's motion to dismiss AT&T's counterclaim.

III.

Federal Rule of Civil Procedure 12(b)(6) provides for the dismissal of a complaint if the plaintiff fails to state a claim upon which relief can be granted. Fed. R. Civ. P. 12(b)(6). Under Federal Rule of Civil Procedure 8(a)(2), a pleading must contain "a short and plain statement of the claim showing that the pleader is entitled to relief." This pleading standard does not require detailed factual allegations," but it does require 'more than labels and conclusions"; a "formulaic recitation of the elements of a cause of action" will not suffice. *Bell Atl.. Corp. v. Twombly*, 550 U.S. 544, 555, 127 S.Ct. 1955, 167 L.Ed.2d 929 (2007). Therefore, in order to withstand a motion to dismiss pursuant to Rule 12(b)(6), "a complaint must contain sufficient factual matter, accepted as true, to 'state a claim to relief that is plausible on its face.' *Ashcroft v. Iqbal*, 556 U.S. 662, 678, 129 S.Ct. 1937, 173 L.Ed.2d 868 (2009).

The plausibility standard is satisfied "when the plaintiff pleads factual content that allows the court to draw the reasonable inference that the defendant is liable for the misconduct alleged." Id. The plausibility standard is not a "probability requirement," but "it asks for more than a sheer possibility that a defendant has acted unlawfully." *Id.* To decide if a complaint meets this plausibility standard and, therefore, survives a motion to dismiss, the Third Circuit has set forth a three-step analysis. A court must

(1) "outline the elements a plaintiff must plead to a state a claim for relief"; (2) "peel away those allegations that are no more than conclusions and thus not entitled to the assumption of truth"; and (3) "look for well-pled factual allegations, assume their veracity, and then determine whether they plausibly give rise to an entitlement to relief." *Bistrian v. Levi*, 696 F.3d 352, 365 (3d Cir. 2012) (internal quotation marks omitted); see also *Santiago v. Warminster Twp.*, 629 F.3d 121, 130 (3d Cir.2010).

A. Counts I, II, III, and V

Plaintiff moves to dismiss Counts I, II, III and V contending that these claims are barred by the Communications Act and conflict with lawful tariff rates currently in effect. First, Plaintiff argues that these counts fail to state a claim because the INS's tariffs are "deemed lawful." Under Section 204(a)(3) of the Telecommunications Act, "[a]ny charge, classification, regulation, or practice shall be effective 7 days (in the case of a reduction in rates or 15 days (in the case of an increase in rates) after the date on which it is filed with the Commission unless the Commission takes action under paragraph (1) before the end of that 7-day or 15-day period, as is appropriate." 47 U.S.C. §204(a)(3). As such, Plaintiff contends that because it filed its abovecap rates pursuant to Section 204(a)(3) and the rates were not challenged by AT&T or suspended by the FCC, the rates are lawful and cannot be challenged here.

In response, AT&T confirms that carriers commonly file tariffs with rates that the FCC has not reviewed, and if such a tariff is filed pursuant to Section 204(a)(3) and not suspended, the carrier cannot be liable retroactively for refunds even if it is later found that the carrier's rate is unreasonable. ECF No. 17 (Opp. Br.) at 7. However, AT&T argues that nothing in Section 204(a)(3) permits a carrier to file a rate or term in a tariff that the FCC has already found to be unlawful and have that rate or term, if not suspended by the FCC, transformed into a lawful rate or term. AT&T argues that INS was not permitted to file a tariff with rates above the rate cap and, therefore, the tariffs could not become effective or

"deemed lawful." AT&T also argues that when INS failed to revise its tariffs to reduce its intrastate rates over time (as required by the Connect America Order ¶ 801), those tariffs became unlawful and void as well. AT&T relies in large part on the position the FCC filed an amicus brief with the Third Circuit in *PaeTec Commc'ns v. MCI Commc'ns Servs.*, No 11-2268 (3d Cir. Mar. 14, 2012). In that case, a CLEC filed a switched access tariff pursuant to Section 204(a)(3) that contained rates higher than an FCC-specified benchmark. The carrier claimed that the rate was "deemed lawful" because the FCC had not suspended the tariff. The Third Circuit requested that the FCC file an amicus brief to address "[w]hether a CLEC's switched access tariff, filed on a 'streamlined' basis pursuant to 47 U.S.C. § 203(a)(3), but subsequently found to violate the FCC's benchmark, can enjoy 'deemed lawful' status?" Brief For Amicus Curiae at 2 (Brown Cert. Ex. A). The FCC answered in the negative, explaining that where a carrier is prohibited from filing a tariff, any attempt to do so would violate FCC rules and be void *ab initio* if filed with the FCC.[2] *Id.*

Additionally, AT&T takes issue with Plaintiff's argument that its claims must be dismissed because AT&T did not petition the FCC to suspend INS's tariff filings and the FCC did not suspend them. AT&T states that the FCC has previously held that decisions whether to suspend a tariff do not establish any binding precedent when the tariff is later challenged under Sections 206-208, under which AT&T's rights to relief in the proceeding arise. EFC No. 17 at 14. (citing *Qwest Communications Co. v.*

---

2 The Supreme Court has stated that it defers to the FCC in certain circumstances:

> In the absence of any unambiguous statute or regulation, we turn to the FCC's interpretation of its regulations in its amicus brief. See, e.g., *Chase Bank USA, N.A. v. McCoy*, 562 U.S. ---, ---, 131 S.Ct. 871, 880, 178 L.Ed.2d 716 (2011). As we reaffirmed earlier this Tenii, we defer to an agency's interpretation of its regulations, even in a legal brief, unless the interpretation is" 'plainly erroneous or inconsistent with the regulation [s]' " or there is any other" 'reason to suspect that he interpretation does not reflect the agency's fair and considered judgment on the matter in question.'" *Id.*, at ---, ---, 131 S.Ct., at 880, 881 (quoting Auer v. Robbins, 519 U.S. 452, 461, 462, 117 S.Ct. 905, 137 L.Ed.2d 79(1997)).

Northern Valley Communications, 26 FCC Rcd. 8332, ¶ 14, petition for review denied, 717 F.3d 1017 (D.C. Cir. 2013)).

AT&T further argues that even if INS were correct and Section 204(a)(3) applied here, customers can nevertheless obtain remedies against a "deemed lawful" tariff prospectively. Consequently, AT&T contends that Count V, which seeks declaratory relief, would nevertheless survive.

Also with respect to the Counterclaim's Counts I, II, and V, AT&T contends that dismissal is not warranted because AT&T has stated a *prima facie* claim that INS is engaged in access stimulation and thus INS is also liable under Sections 201 and 203. INS calls these allegations implausible speculation, but AT&T asserts in the Counterclaims that its bills from INS show billed minutes for terminate interstate switched access were more than 30 times the volume of originating interstate switched access services, which exceeds the 3:1 ratio which triggers a presumption of access stimulation for the FCC. Counterclaims ¶ 87.

INS's second argument in support of its motion as to Counts I, II, III and V is that it is not subject to the rate caps in the Connect America Order. INS contends that the Connect America Order does not apply to CEA tariff rates or the functions performed by CEA service. INS claims it is not an ILEC and thus is not a "rate of return" carrier as set forth in 47 C.F.R. § 5 1.903(g) and as such is not subject to the rate caps. AT&T argues that the FCC applied the caps to "all" interstate switched access services, including "all transport rates" and as INS's CEA service is a type of switched access service, the rate caps apply. *See* Connect America Order, ¶800-0 1.

B. <u>Counts IV and VI</u>

In Counts IV and VI, AT&T contends INS conspired with another LEC, Great Lakes, to force AT&T to use INS's services despite the fact that they were not necessary and were costly. INS argues

that the interconnection agreement with Great Lakes is "mandated" by the FCC, Iowa Board of Utilities, and court decisions. It further argues there is no legal basis to hold INS responsible for Great Lake's network design and call routing. INS also argues the claims are barred by the Hobb's Act.

In response, AT&T argues that the regulatory decisions that INS contends "mandates" the arrangement are all at least 20 years old and could not "mandate" any interconnection agreement between INS and CLECs like Great Lakes for the simple reason that CLECs did not exist that long ago because there was no competition in providing local access services. In local markets, competition did not arise until passage of the Telecommunications Act of 1996. AT&T also argues that even if INS were correct and there was some requirement that AT&T connect to CLECs through INS, on the facts pled here INS's arrangement is nevertheless unreasonable because on large volumes of calls INS's service (which AT&T alleges is unnecessary) substantially increase AT&T's costs without a corresponding benefit. Finally, to the extent that INS contends that it cannot be liable for Great Lake's network design and call routing, AT&T argues that the Court cannot make such a finding based solely on the pleadings.

The Court has considered the facts alleged in the Counterclaim in light of the relevant standard and that AT&T sets forth plausible causes of action in its counterclaim showing that it may be entitled to some relief. As such, the motion to dismiss is denied.

IV.

"The doctrine of primary jurisdiction . . . . is concerned with promoting proper relationships between the courts and administrative agencies charged with particular regulatory duties." *U.S. Western Pac. R. Co.*, 352 U.S. 59, 63, 77 S. Ct. 161, 1 L. Ed 2d 126 (1956). It is a principle of judicial administration designed to achieve consideration between administrative agencies and the Courts." *James v. Global Tel*Link*, 2014 U.S. Dist. Lexis 124708 *14 (D.N.J. Sept. 8, 2014). The doctrine applies

"to claims properly cognizable in court that contain some issue within the special competence of an administrative agency." *Reiter v. Cooper*, 507 U.S. 258, 268, 113 S. Ct. 1213, 122 L. Ed.2d 604 (1993). The doctrine of primary jurisdiction should be invoked where "the matter involves technical or policy considerations which are beyond the courts ordinary competence and within the agency's field of expertise." *MCI Commc'n Corp. v. Am. Telephone & Telegraph Co.*, 496 F.2d 214, 220 (3d Cir.1974). "The Third Circuit has stated that the doctrine applies when decision-making 'is divided between courts and administrative agencies [and] calls for judicial abstention in cases where protection of the integrity of a regulatory scheme dictates primary resort to the agency which administers the scheme" *Global Naps, Inc. v. Bell Atlantic-Net Jersey, Inc.*, 287 F.Supp.2d 532, 549 (D.N.J. 2003) (quoting *Cheyney State Coil. Faculty v. Hufstedler*, 703 F.2d 732, 736 (3d Cir. 1983)). Ordinarily, primary jurisdiction "comes into play whenever enforcement of a claim requires the resolution of issues which under a regulatory scheme have been placed within the special competence of an administrative body." *James* at 2014 U.S. Dist. Lexis 124708 *4.

Generally, the Court considers four factors in determining whether to refer a matter to an administrative agency. They are:

> (1) whether the issues presented fall within the "conventional expertise" of judges; (2) whether the issues are within the agency's discretion or require the exercise of the agency's expertise; (3) whether there are any dangers of inconsistent rulings between the courts and agency; and (4) whether a prior application has been made to the agency. *Oh v. AT&T Corp.*, 76 F. Supp. 2d 551, 557 (D.N.J. 1990).

Three of these four factors support the referral of this matter to the FCC. First, the issue does not fall within the conventional expertise of the Court. I am unfamiliar with (a) "access services" practices; (b) the terms within the Connect America Order; (c) the difference between Central Equal Access (CEA)

services and switched access service (AT&T Answer, ¶ 2); and (d) the significance of whether INS is a rate of return carrier or a competitive local exchange carrier.

Secondly, obviously the issues concerning the relationship between a long distance carrier (AT&T) and local carrier (INS) fits within the FCC's expertise.

Third, there is some risk of inconsistent findings between this Court and the FCC. More specifically, AT&T's answer and counterclaim refer to the Great Lake Communications case against which AT&T has an action pending before the FCC. The two matters may have overlapping issues and there is a risk inconsistent findings. In light of same, the matter should be referred to the FCC.

Since this matter has been pending before the Court for about 18 months, INS objects to referring the matter to the FCC because it will further delay an expeditious result. Balancing the delay, if any, against the FCC's expertise, the latter is the more prudent approach.

INS argues that their claim does not require any special knowledge of the FCC. INS argues that the case can be resolved by simply applying the Tariff. This is not so. AT&T's answer and counterclaim alleges sophisticated practices by INS that may render some charges void under the tariff. In addition some courts have found that the reasonableness of the rates requires a reference to FCC. See *Global Naps, Inc. v. Bell Atlantic-New Jersey, Inc.*, 287 F. Supp. 2d, 532, 549 (DNJ 2004); *AT&T v. People's Network, Inc.*, 1993 U.S. Dist. Lexis 21248 * 34. *See James v. Global Tel*Link Corp.*, 2014 U.S. Dist. Lexis 124708 * 15 (DNJ 2014). Here, the facts of the answer and counterclaim are far beyond the

"reasonableness" inquiry, and may require in depth knowledge of how the CES process operates and whether those practices may be manipulated. This requires the knowledge of fair and unbiased experts of the FCC.

ORDER

IT IS on this 14th day of October, 2015;

ORDERED that AT&T's motion to stay the matter and refer it to the FCC is granted; and it is further;

ORDERED that Plaintiff's motion to dismiss the counterclaim (EF No. 12) is denied without prejudice; and it is further

ORDERED that Plaintiff's motion for summary judgment (ECF No. 26) is denied without prejudice.

PETER G. SHERIDAN, U.S.D.J.

Exhibit 6

Order, *INS v. AT&T Corp.*, No. 15-4093 (3d Cir. Aug. 4, 2016)

UNITED STATES COURT OF APPEALS FOR THE THIRD CIRCUIT

February 16, 2016
ACO-048

No. **15-4093**

IOWA NETWORK SERVICES, INC., an Iowa corporation,
Appellant

v.

AT&T CORP., a New York corporation

(D.N.J. No. 3-14-cv-03439)

Present: AMBRO, SHWARTZ and GREENBERG, Circuit Judges

1. Clerk's Submission for Possible Dismissal of Appeal for Lack of Appellate Jurisdiction.

2. Response filed by Appellee AT&T Corp to possible dismissal for lack of appellate jurisdiction.

3. Response filed by Appellant Iowa Network Services Inc to possible dismissal for lack of appellate jurisdiction.

Respectfully,
Clerk/JK

O R D E R

The foregoing appeal is dismissed for lack of appellate jurisdiction. The District Court stayed the underlying proceeding pending the outcome of a referral of certain issues to the Federal Communications Commission pursuant to the doctrine of primary jurisdiction. Referrals on the basis of primary jurisdiction merely postpone federal court jurisdiction. See United States v. Phila. Nat'l Bank, 374 U.S. 321, 353 (1963). Accordingly, such an order is not a final, immediately appealable decision for purposes of 28 U.S.C. § 1291. See Richman Bros. Records, Inc. v. U.S. Sprint Commc'ns Co., 953 F.2d 1431, 1442 (3d Cir. 1991) ("[O]rders transferring discrete issues involving regulatory expertise under the doctrine of primary jurisdiction, by giving way to a *federal* administrative agency, are not final decisions appealable under section 1291."). In

(Continued)

O R D E R

addition, because a primary jurisdiction referral is "inextricably bound up" with the merits and is not otherwise effectively unreviewable, such an order does not qualify as an immediately appealable collateral order under Cohen v. Beneficial Indus. Loan Corp., 337 U.S. 541, 546 (1949). See Richman Bros., 953 F.2d at 1447.

By the Court,

s/ Thomas L. Ambro, Circuit Judge

Dated: August 4, 2016

mlr/cc: Tony S. Lee, Esq.
Robert E. Levy, Esq.
James U. Troup, Esq.
Richard H. Brown, III, Esq.
Michael J. Hunseder, Esq.

Exhibit 7

Form Filer Database, Detailed Information for INS

PUBLIC VERSION

Announcing a new FCC.gov
Tell us what you think and help shape the future »

FCC Form 499 Filer Database

DETAILED INFORMATION

Form 499 Filer 829226 RSS Feed

Filer Identification Information:

499 Filer ID Number:	**829226**
Registration Current as of:	**Apr 3 2017 12:00AM**
Legal Name of Reporting Entity:	**Aureon Communications, L.L.C.**
Doing Business As:	**Aureon Communications, L.L.C.**
Principal Communications Type:	**CAP/LEC**
Universal Service Fund Contributor:	**Yes**
(Contact USAC at 888-641-8722 if this is not correct.)	
Holding Company:	**AUREON NETWORK SERVICES INC**
Registration Number (CORESID):	**0020655486**
Management Company:	
Headquarters Address:	**7760 Office Plaza Drive South**
City:	**West Des Moines**
State:	**IA**
ZIP Code:	**50266**
Customer Inquiries Address:	**7760 Office Plaza Drive South**
City:	**West Des Moines**
State:	**IA**
ZIP Code:	**50266**
Customer Inquiries Telephone:	**877-777-7128 Ext:**
Other Trade Names:	**Alliance Connect LLC**

Agent for Service of Process:

Local/Alternate Agent for Service of Process:	
Telephone:	
Extension:	
Fax:	
E-mail:	
Business Address of Agent for Mail or Hand Service of Documents:	
City:	
State:	
ZIP Code:	
D.C. Agent for Service of Process:	**James Troup**
	Fletcher, Heald & Hildreth, PCC
Telephone:	**202-828-5700**
Extension:	
Fax:	**703-812-0486**
E-Mail:	**troup@fhhlaw.com**
Business Address of D.C. Agent for Mail or Hand Service of Documents:	**2200 Pennsylvania Ave, N.W.**
	4th Floor East
City:	**Washington**
State:	**DC**
ZIP Code:	**20037**

FCC Registration Information:

Chief Executive Officer:	**Mick Herke**
Business Address:	**7760 Office Plaza Drive South**
City:	**West Des Moines**
State:	**IA**
ZIP Code:	**50266**
Chairman or Other Senior Officer:	**Justyn Miller**
Business Address:	**7760 Office Plaza Drive South**
City:	**West Des Moines**
State:	**IA**
ZIP Code:	**50266**
President or Other Senior Officer:	**John Vogelaar**
Business Address:	**7760 Office Plaza Drive South**
City:	**West Des Moines**
State:	**IA**
ZIP Code:	**50266**

Jurisdictions in Which the Filing Entity Provides Telecommunications Services:

Iowa

Use browser "Back" button to return to results page.

This database reflects filings received by USAC as of May. 05, 2017

FCC Form 499 Filer Database Software Version 01.03.06 July 21, 2011

PUBLIC VERSION

Exhibit 8

AT&T GLCC Complaint, FCC Docket No. 16-170 (filed August 16, 2016)

PUBLIC VERSION

Before the
FEDERAL COMMUNICATIONS COMMISSION
Washington, D.C. 20554

In the Matter of **AT&T CORP.** **One AT&T Way** **Bedminster, NJ 07921** **(202) 457-3090** ***Complainant,*** ***v.*** **GREAT LAKES COMMUNICATION CORP.** **1713 McNaughton Way** **Spencer, IA 51301** **(712) 580-4700** ***Defendant.***	**File No. EB-16-MD-001**

FORMAL COMPLAINT OF AT&T CORP.

Letty Friesen
AT&T SERVICES, INC
161 Inverness Drive West
Englewood, CO 80112
(303) 299-5708
(281) 664-9858 (fax)

James F. Bendernagel, Jr.
Michael J. Hunseder
E. Benton Keatley
SIDLEY AUSTIN LLP
1501 K Street NW
Washington, DC 20005
(202) 736-8000
(202) 736-8711 (fax)

Brian A. McAleenan
Benjamin R. Brunner
SIDLEY AUSTIN LLP
One South Dearborn
Chicago, IL 60603
(312) 853-7000
(312) 853-7036 (fax)

Dated: August 16, 2016

Counsel for AT&T Corp.

TABLE OF CONTENTS

OVERVIEW 1
JURISDICTION 5
STATEMENT REGARDING SUPPORTING MATERIAL 5
REQUIRED CERTIFICATIONS 6
THE PARTIES 7
RELEVANT NON-PARTIES 8
INTRODUCTION AND SUMMARY 10
FACTS IN SUPPORT OF THE FORMAL COMPLAINT 10
A. Pertinent Regulatory Background. 10
B. GLCC's Founding and Business. 11
C. The IUB Criticizes GLCC's Business Practices. 12
D. GLCC Revises Its Interstate Switched Access Tariff In Response To The *Connect America Order*. 15
E. GLCC's Relationships with its Free Calling Parties 19
G. GLCC Does Not Treat The Revenues It Receives From Its Free Calling Parties As Interstate Telecommunications Service Revenues For Purposes Of State Taxation Or For Reporting Requirements To The Commission. 25
H. GLCC's Access Charges To AT&T. 27
I. GLCC's Refusal To Provide Direct Connection Arrangements To AT&T At Reasonable Rates. 28
COUNT I
(Refusal To Provide Direct Connection Arrangements In Violation Of Section 201(b) Of The Act) 34
COUNT II
(Failure To Provide Telecommunication Service For A Fee In Violation Of Sections 201(b) And 203(c) Of The Act) 36
COUNT III
(Declaratory Ruling on Referred Issue 4) 39

PRAYER FOR RELIEF 40

TABLE OF AUTHORITIES

Cases **Page(s)**

In re Access Charge Reform,
16 FCC Rcd. 9923 (2001) 39

AT&T Corp. v. *All American Tel. Co.*,
28 FCC Rcd. 3477 (2013) 39

AT&T Corp. v. *All American Tel. Co.*,
30 FCC Rcd. 8958 (2015), *appeal pending*, No. 15-1354 (D.C. Cir. 2016) 4

AT&T Corp. v. *Alpine Commc'ns, LLC*,
27 FCC Rcd. 11511 (2012), *recon denied*, 27 FCC Rcd. 16606 (2012) 9, 32

AT&T Corp. v. *Great Lakes Commc'ns Corp.*,
No. 07-0043 (S.D. Iowa Jan. 29, 2007) 26

AT&T Corp. v. *YMAX Commc'ns Corp.*,
26 FCC Rcd. 5742 (2011) 38

In re Connect America Fund,
26 FCC Rcd. 17663 (2011) ..... *passim*

In re Great Lakes Commc'ns Corp.,
No. SPU-2011-004 (IUB Aug. 30, 2012) 11, 12, 13

Great Lakes Commc'ns Corp. v. *AT&T Corp.*,
No. 13-04117, 2014 WL 2866474 (N.D. Iowa Jun. 24, 2014) 2, 14

Great Lakes Commc'ns Corp. v. *AT&T Corp.*,
No. 13-04117, 2015 WL 3948764 (N.D. Iowa Jun. 29, 2015) 2, 4, 5, 6

Great Lakes Commc'ns Corp. v. *AT&T Corp.*,
No. 13-04117, 2015 WL 897976 (N.D. Iowa Mar. 3, 2015) 2, 3, 4, 5

Iowa Network Servs., Inc. v. *AT&T Corp.*,
No. 14-03439, 2015 WL 5996301 (D.N.J. Oct. 14, 2015) 9

In re Qwest Commc'ns Corp.,
No. FCU-2007-002, 2009 WL 3052208 (IUB Sept. 21, 2009) 12, 13, 14

Qwest Commc'ns v. *Farmers & Merchs. Mut. Tel. Co.*,
24 FCC Rcd. 14801 (2009), *recon. denied*, 25 FCC Rcd. 3422 (2010), *aff'd*,
668 F.3d 714 (D.C. Cir. 2011) 12

Qwest Commc'ns v. *Northern Valley Commc'ns*,
26 FCC Rcd. 8332 (2011), *recon denied*, 26 FCC Rcd. 14520 (2011), *aff'd*,
Northern Valley Commc'ns v. *FCC*, 717 F.3d 1017 (D.C. Cir. 2013) 3, 36, 37, 39

In re Universal Serv. Contribution Methodology,
28 FCC Rcd. 16037 (2013) 26

Statutes

47 U.S.C. § 151 8

47 U.S.C. § 153(50) 18

47 U.S.C. § 201(b) ..... *passim*

47 U.S.C. § 203(c) ..... *passim*

47 U.S.C. § 206 40

47 U.S.C. § 208 5

Other Authorities

47 C.F.R. § 1.718 1

47 C.F.R. § 1.720 *et seq.* 1

47 C.F.R. §1.721(a) ..... *passim*

47 C.F.R. § 1.722(d) 5

47 C.F.R. § 52.21(n) 23

47 C.F.R. § 61.3(bbb) 19

47 C.F.R. § 61.26 .....3, 15

PUBLIC VERSION

Before the
FEDERAL COMMUNICATIONS COMMISSION
Washington, D.C. 20554

In the Matter of **AT&T CORP.** **One AT&T Way** **Bedminster, NJ 07921** **(202) 457-3090** ***Complainant,*** ***v.*** **GREAT LAKES COMMUNICATION CORP.** **1713 McNaughton Way** **Spencer, IA 51301** **(712) 580-4700** ***Defendant.***	**File No. EB-16-MD-001**

FORMAL COMPLAINT OF AT&T CORP.

1. Pursuant to Sections 201, 203, 206, and 208 of the Communications Act ("Act"), 47 U.S.C. §§ 201, 203, 206, 208, and Sections 1.718 and 1.720 *et seq.* of the rules of the Federal Communications Commission ("FCC" or "Commission"), 47 C.F.R. §§ 1.718, 1.720 *et seq.*, and in accordance with the Commission's February 2, 2016 Letter Ruling,[1] Complainant AT&T Corp. ("AT&T") hereby brings this Formal Complaint against Defendant Great Lakes Communication Corp. ("GLCC"), and states in support as follows:

OVERVIEW

2. In an Order dated March 3, 2015, the United States District Court for the Northern District of Iowa ("District Court"), acting on the report and recommendations of the

[1] Ex. 1, Letter from Lisa B. Griffin (Commission) to James F. Bendernagel, Jr. and Michael J. Hunseder (Counsel for AT&T) and Joseph P. Bowser and G. David Carter (Counsel for GLCC), dated Feb. 2, 2016 ("February 2 Letter Ruling").

Magistrate Judge, dismissed without prejudice and referred two of AT&T's counterclaims to the Commission pursuant to the primary jurisdiction doctrine.[2] In a subsequent Order dated June 29, 2015, the District Court referred three additional issues to the Commission pursuant to the primary jurisdiction doctrine.[3]

3. On January 8, 2016, AT&T notified Commission Staff of the two referral orders and suggested that the Commission address all of the referred issues in a single formal complaint filed at the Commission.[4] In a response dated January 11, 2016, GLCC argued that the District Court had not referred the two counterclaims addressed in the First Referral Order and took the position that those claims should be addressed in a separate and independent proceeding.[5] On January 29, 2016, Commission Staff conducted a status conference call with the parties to discuss how to effectuate the District Court's referral. In the February 2 Letter Ruling, the Commission rejected GLCC's position and directed AT&T to file this Formal Complaint addressing all of the issues referred in both the First and Second Referral Orders.[6]

4. In accordance with the February 2 Letter Ruling, Count I of this Formal Complaint alleges that GLCC's refusal to provide a direct connection arrangement with AT&T was an unjust and unreasonable practice in violation of Section 201(b) of the Act, 47 U.S.C.

[2] Order on Report and Recommendation, *Great Lakes Commc'ns Corp.* v. *AT&T Corp.*, No. 13-04117, 2015 WL 897976, at **5-7 (N.D. Iowa Mar. 3, 2015) ("First Referral Order").

[3] Mem. Op. & Order Regarding Referral to FCC, *Great Lakes Commc'ns Corp.* v. *AT&T Corp.*, No. 13-04117, 2015 WL 3948764, at **3-9 (N.D. Iowa Jun. 29, 2015) ("Second Referral Order").

[4] Ex. 2, Letter from James F. Bendernagel (Counsel for AT&T) to Christopher Killion (Commission), dated Jan. 8, 2016.

[5] Ex. 3, Letter from G. David Carter (Counsel for GLCC) to Christopher Killion (Commission), dated Jan. 11, 2016.

[6] Ex. 1, February 2 Letter Ruling at 2.

§ 201(b).[7] Under the Commission's rules, GLCC must benchmark its rates, and offer service functionally equivalent, to Qwest Corporation d/b/a CenturyLink QC ("CenturyLink"). 47 C.F.R. § 61.26(g). CenturyLink offers a direct connection arrangement, and GLCC previously offered a comparable service until it eliminated that arrangement when it amended its tariff following the *Connect America Order*.[8] *See* Legal Analysis, Part I. If GLCC offered a direction connection on the same terms as CenturyLink, that arrangement would dramatically reduce the charges assessed to AT&T and other interexchange carriers ("IXCs") and their customers for GLCC's access stimulation traffic. *Id.*[9]

5. Count II of this Formal Complaint alleges that GLCC has violated Sections 203(c) and 201(b) of the Act, 47 U.S.C. §§ 203(c) and 201(b), by unjustly and unreasonably billing AT&T for services contrary to the terms set forth in GLCC's revised tariff, as well as the Commission's rules. *See* Legal Analysis, Part II. GLCC's free conference and chat partners (the "Free Calling Parties") do not pay a fee for interstate telecommunications service, and thus are not end users pursuant to the terms of GLCC's revised tariff and the Commission's rules.[10] Consequently, GLCC is not entitled under the terms of its tariff, or the Commission's rules, to

[7] Along with this Formal Complaint, AT&T is submitting a legal analysis that sets forth in more detail the legal arguments in support of the Formal Complaint. *See* Legal Analysis in Support of Formal Complaint of AT&T Corp., File No. EB-16-MD-001 (August 15, 2016) ("Legal Analysis").

[8] Report and Order, *In re Connect America Fund*, 26 FCC Rcd. 17663, ¶¶ 33, 648-49 (2011) ("*Connect America Order*").

[9] Count I addresses an issue referred by the District Court in the First Referral Order, which Commission Staff labeled Issue 2 in its February 2 Letter Ruling.

[10] *See Qwest Commc'ns* v. *Northern Valley Commc'ns*, 26 FCC Rcd. 8332, ¶ 9 (2011) ("*Northern Valley I*"), *recon denied*, 26 FCC Rcd. 14520 (2011) ("*Northern Valley II*"), *aff'd*, *Northern Valley Commc'ns* v. *FCC*, 717 F.3d 1017 (D.C. Cir. 2013) ("*Northern Valley III*").

assess AT&T access charges on these calls. *See* Legal Analysis, Part III.[11]

6. Count III of this Formal Complaint alleges that GLCC may not recover for its regulated interstate call termination services from a long distance carrier except via a validly filed tariff or an express, negotiated contract with the IXC. *See* Legal Analysis, Part III. The District Court already ruled in favor of AT&T, dismissing GLCC's state law claims for recovery. *See id.* That holding was undeniably correct. *Id.* GLCC's services are interstate access services, and, as such, the Commission has exclusive jurisdiction over those services, and the states lack jurisdiction. *Id.* GLCC thus cannot rely on state law to recover for such services, particularly where the Commission has established two mechanisms for recovery and explained that there is no "regulatory gap" in its rules that allow for alternate damage theories. *Id.*[12] Additionally, although many state law equitable claims will be invalid as a matter of law where (as here) a contract (*i.e.*, the tariff) exists with respect to the imposition of access charges, if state law allowed any cause of action for recovery, that cause of action would conflict with the Commission's regime for access services and would be pre-empted. *See* Legal Analysis. Part III. Further, because GLCC filed a tariff for access services, its state law claims are inconsistent with, and barred by, the filed tariff doctrine. *Id.* Finally, there is no other basis under the Commission's rules (apart from a valid tariff or negotiated contract) for GLCC to obtain compensation for its services. *Id.*[13]

[11] Count II addresses an issue referred by the District Court in the Second Referral Order, which Commission Staff labeled Issue 3 in its February 2 Letter Ruling.

[12] *See AT&T Corp.* v. *All American Tel. Co.*, 30 FCC Rcd. 8958, ¶ 13 n.50 (2015), *appeal pending*, No. 15-1354 (D.C. Cir. 2016).

[13] Count III addresses the other two issues referred by the District Court in the Second Referral Order, which Commission Staff labeled Issues 4 and 5 in its February 2 Letter Ruling. Count III also addresses the other issue referred by the District Court in the First Referral Order, which Commission Staff labeled Issue 1 in its February 2 Letter Ruling.

JURISDICTION

7. The Commission has jurisdiction over this Formal Complaint under Section 208 of the Act, 47 U.S.C. § 208, and pursuant to the First Referral Order and the Second Referral Order. GLCC is a common carrier, subject to Title II of the Act, including Sections 201, 203, 206, and 208, 47 U.S.C. §§ 201, 203, 206, 208.[14]

8. In the First Referral Order, the District Court dismissed without prejudice two of AT&T's counterclaims, but retained jurisdiction over the underlying matter. First Referral Order, at **5-7. In the Second Referral Order, the District Court stayed the case pending the resolution of the referred issues. Second Referral Order, at **3-9.

9. In Counts I and II, AT&T requests damages for GLCC's unjust and unreasonable conduct. However, pursuant to Section 1.722(d) of the Commission's Rules, 47 C.F.R. § 1.722(d), and consistent with established Commission practice, AT&T requests that the Commission first determine the liability issues relating to Issues 1 and 2 and then decide AT&T's damages in a separate and subsequent proceeding. AT&T further requests that any damages relating to Count III be determined, if at all, in that separate proceeding.

STATEMENT REGARDING SUPPORTING MATERIAL

10. As part of this Formal Complaint, AT&T is including a complete statement of facts establishing that GLCC has violated the Communications Act and the Commission's rules implementing the Act.[15] AT&T is also attaching as exhibits copies of the documents and data

[14] *See* Ex. 4, Form 499 Filer Database, Detailed Information for GLCC, http://apps.fcc.gov/cgb/form499/499detail.cfm?FilerNum=825621 ("GLCC Form 499") (purporting to be local exchange carrier ("LEC"), which is a type of common carrier, and stating that it provides telecommunications services in Iowa).

[15] *See infra* ¶¶ 23-59.

compilations upon which it relies in support of this Formal Complaint.[16] Along with this Formal Complaint, AT&T is also providing (i) a Legal Analysis that explains why GLCC has violated the Act and the Commission's implementing rules; (ii) a supporting declaration by John W. Habiak; (iii) an information designation that is consistent with the Staff's August 9, 2016 Letter Ruling; (iv) stipulations (v) proposed interrogatory requests; and (vi) other forms and certifications required by the Commission's rules, 47 C.F.R. §1.721(a).[17] Finally, AT&T and GLCC have agreed to a series of stipulations that are also being provided.[18]

11. AT&T is filing a public version, a confidential version, and a highly confidential version of the Formal Complaint. This Formal Complaint and supporting material contain certain information and documents that have been designated as confidential or highly confidential in proceedings before the District Court. The public version is a redacted version of these materials. In the confidential and highly confidential versions, AT&T is filing these materials under seal on an unredacted basis pursuant to the Protective Order agreed to by the parties and entered by the Commission on June 2, 2016.

REQUIRED CERTIFICATIONS

12. Pursuant to Section 1.721(a)(8) of the Commission's rules, 47 C.F.R. § 1.721(a)(8), AT&T hereby certifies that it attempted in good faith to discuss the possibility of settlement with GLCC prior to filing the Formal Complaint. The parties held detailed settlement discussions prior to the District Court's Second Referral Order, but those discussions did not result in a settlement agreement. Although AT&T remains open to settlement, it does

[16] *See* Exs. 1-91.

[17] In accordance with the Staff's August 9, 2016 Letter Ruling, AT&T is not providing (1) proposed findings of fact and conclusions of law or (2) a document log.

[18] *See* Stipulations with Regard to Referred Matters, File No. EB-MD-001 (Aug. 15, 2016) ("Stip.").

not believe that efforts by the Commission Staff to assist the parties in settling this dispute, at this juncture, would be fruitful at this juncture. Instead, it is AT&T's view that it is important that the Formal Complaint proceeding move forward, after which both the parties and Commission Staff will be in a better position to assess the prospects for settlement.

13. Pursuant to Section 1.721(a)(9) of the Commission's rules, 47 C.F.R. § 1.721(a)(9), AT&T states that GLCC, as discussed above, filed an action in the District Court on December 18, 2013. AT&T's Formal Complaint originates from the First and Second Referral Orders in that action. Accordingly, this Formal Complaint is based on many of the same facts underlying the District Court action.

14. Pursuant to Section 1.721(a)(10) of the Commission's rules, 47 C.F.R. § 1.721(a)(10), as well as the Commission Staff's August 9, 2016 Letter Ruling, AT&T is submitting as an attachment to this Formal Complaint an information designation, which consists of the name, business address, and position of each individual believed to have firsthand knowledge of the facts alleged with particularity in the Formal Complaint, along with a description of the facts within any such individual's knowledge. Further, AT&T notes that the information designation incorporates the extensive discovery that was developed in the District Court action, including an exhibit list jointly prepared by the parties during the course of that action.

THE PARTIES

15. Complainant AT&T is a New York corporation that provides communications and other services, and has its principal place of business in Bedminster, New Jersey.[19] This

[19] *See* Ex. 5, Form 499 Filer Database, Detailed Information for AT&T, http://apps.fcc.gov/cgb/form499/499detail.cfm?FilerNum=806172 ("AT&T Form 499").

Formal Complaint relates to AT&T's role as a purchaser of services, and not as a common carrier providing services.[20]

16. Defendant GLCC is an Iowa corporation with its principal place of business in Spencer, Iowa.[21] For purposes of this Formal Complaint, GLCC is operating as a common carrier, and specifically as a competitive local exchange carrier ("CLEC"),[22] that is subject to the Act, 47 U.S.C. §§ 151 *et seq.* GLCC's CEO is Joshua D. Nelson.[23] GLCC's President is Kellie Beneke.[24] GLCC has authorization from the Iowa Utilities Board ("IUB") to provide telecommunications service in Milford, Lake Park, and Spencer, Iowa.[25] GLCC operates the only switch it owns or uses at Spencer.[26] GLCC has filed an interstate access tariff with the Commission that purports to govern the terms of its service to AT&T ("GLCC FCC Tariff No. 2").[27]

RELEVANT NON-PARTIES

17. In addition to the above-named parties, the following non-parties are involved in the facts underlying this Formal Complaint.

18. CenturyLink has its principal place of business in Monroe, Louisiana.[28] For

[20] Declaration of John W. Habiak ("Habiak Decl.") ¶ 3.

[21] *See* Stip. ¶ 1; Ex. 4, GLCC Form 499.

[22] *See* Stip. ¶ 1; Ex. 6, Deposition of Joshua D. Nelson ("Nelson Dep.") at 8:24-9:2, taken Nov. 6, 2014.

[23] Stip. ¶ 6; Ex. 6, Nelson Dep. at 5:12-14.

[24] Stip. ¶ 7; Ex. 7, Deposition of Kellie Beneke ("Beneke Dep.") at 4:9-12, taken Nov. 6, 2014.

[25] Stop. ¶ 3; Ex. 6, Nelson Dep. at 20:15-24; *see also id.* at 20:25-21:8 (GLCC's authorization to provide service in Spencer was not obtained until September 2014).

[26] Stip. ¶ 8; Ex. 6, Nelson Dep. at 91:12-16, 95:6-25.

[27] Ex. 8, GLCC FCC Tariff No. 2, filed Jan. 11, 2012.

[28] *See* Ex. 9, Form 499 Filer Database, Detailed Information for CenturyLink, http://apps.fcc.gov/cgb/form499/499detail.cfm?FilerNum=808440 ("CenturyLink Form 499").

purposes of this Formal Complaint, CenturyLink is an incumbent local exchange carrier ("ILEC") operating in various locations in the United States, including Iowa, and has the lowest rates for switched access service of any price-cap ILEC in the state.[29] CenturyLink has filed an interstate tariff with the Commission that governs the terms of its service ("CenturyLink FCC Tariff No. 11").[30]

19. Iowa Network Services, Inc. ("INS") is an Iowa corporation with its principal place of business in West Des Moines, Iowa.[31] For purposes of this Formal Complaint, INS is an intermediate carrier providing access services in Iowa.[32] As relevant to this dispute, INS transports traffic received from AT&T at its tandem switch in Des Moines over its fiber network to Spencer, Iowa.[33] INS has filed an interstate tariff with the Commission that purports to govern the terms of its service ("INS FCC Tariff No. 1").[34]

20. Other relevant non-parties include GLCC's Free Calling Parties. Free Calling Parties are entities that receive high volumes of inbound calls, such as those that provide free chat room services, conferencing services, adult content services, webinars, record voice

[29] Habiak Decl. ¶¶ 2, 17.

[30] Ex. 10, CenturyLink FCC Tariff No. 11, filed Apr. 16, 2013.

[31] *See* Ex. 11, Form 499 Filer Database, Detailed Information for INS, http://apps.fcc.gov/cgb/form499/499detail.cfm?FilerNum=804606 ("INS Form 499").

[32] *AT&T Corp.* v. *Alpine Commc'ns, LLC*, 27 FCC Rcd. 11511, ¶¶ 6-7 (2012) ("*Alpine*"), *recon denied*, 27 FCC Rcd. 16606 (2012); Habiak Decl. ¶ 2.

[33] *See generally* Ex. 6, Nelson Dep. at 96:1-98:25; Stip. ¶ 12.

[34] Ex. 12, INS FCC Tariff No. 1, filed Aug. 10, 1988. AT&T has claimed that INS's tariff is unlawful, and it has withheld certain payment to INS, and INS, in turn, has sued AT&T in the United States District Court for the District of New Jersey. The district court in that case has stayed the case, and has referred issues to the Commission for resolution under the primary jurisdiction doctrine. *See Iowa Network Servs., Inc.* v. *AT&T Corp.*, No. 14-03439, 2015 WL 5996301, at **5-6 (D.N.J. Oct. 14, 2015). INS filed an appeal of that decision, and the Third Circuit dismissed the appeal for lack of appellate jurisdiction. *See* Ex. 87, Order, *Iowa Network Servs., Inc.* v. *AT&T Corp.*, No. 15-4093 (3d Cir. Aug. 4, 2016).

playback, or international calling.[35]

INTRODUCTION AND SUMMARY

21. In this Formal Complaint, AT&T seeks a determination by the Commission that GLCC's refusal to provide a direct connection arrangement to AT&T was unjust and unreasonable in violation of Section 201(b) of the Act, 47 U.S.C. § 201(b). AT&T also seeks a determination by the Commission that GLCC has violated Section 203(c) of the Act, 47 U.S.C. § 203(c), and has engaged in unjust and unreasonable practices in violation of Section 201(b) of the Act, 47 U.S.C. § 201(b), by billing AT&T for interstate switched access services that it did not provide pursuant to the terms of its tariff or the Commission's rules. Finally, AT&T seeks a determination by the Commission that GLCC is not entitled to any compensation under any other basis, apart from a lawful, valid tariff that complies with the Act and the Commission's rules, or an express, negotiated contract.

22. Based on these facts, as well as the additional information set forth below, the Commission should find that GLCC's conduct violated Sections 201(b) and 203(c) of the Act, 47 U.S.C. §§ 201(b), 203(c).

FACTS IN SUPPORT OF THE FORMAL COMPLAINT

A. Pertinent Regulatory Background.

23. In its Legal Analysis, AT&T provides a summary of the relevant regulations regarding switched access service, CLECs, access stimulation, and the Commission's efforts to curtail access stimulation.[36] To avoid repetition, AT&T incorporates the regulatory background of its Legal Analysis by reference here.

[35] Stip. ¶ 10; Ex. 13, Expert Report of David I. Toof, Ph.D. ("Toof Report"), ¶¶ 43-44, submitted Oct. 3, 2014.

[36] *See* Legal Analysis, Part I.A-B.

B. GLCC's Founding and Business.

24. Josh Nelson and his parents founded GLCC in 2005.[37] Throughout its existence, GLCC has nominally operated as a CLEC in western Iowa.[38] In that regard, the IUB authorized GLCC to provide telecommunications service in Lake Park and Milford in 2005, and in Spencer in 2014.[39] GLCC owns and operates its only switch in Spencer.[40]

25. Throughout its existence, GLCC has partnered with free conferencing and chat companies to engage in access stimulation arrangements.[41] These access stimulation arrangements comprised GLCC's entire operation for many years.[42] Prior to August 2012, GLCC had no customers of any kind that were not Free Calling Parties.[43] **[[BEGIN CONFIDENTIAL]]** [redacted] **[[END CONFIDENTIAL]]**

26. **[[BEGIN CONFIDENTIAL]]** [redacted]

[37] Stip. ¶ 2; Ex. 6, Nelson Dep. at 8:12-23.

[38] Ex. 6, Nelson Dep. at 8:24-9:6.

[39] Stip. ¶ 3; Ex. 6, Nelson Dep. at 20:15-21:8.

[40] Stip. ¶ 8; Ex. 6, Nelson Dep. at 91:12-16, 95:6-25.

[41] Stip. ¶ 9; Ex. 6, Nelson Dep. at 8:24-9:9, 60:25-61:23

[42] *See infra* ¶ 29.

[43] Ex. 14, August 2012 Monthly Report, *In re Great Lakes Commc'ns Corp.*, No. SPU-2011-004 (IUB Aug. 30, 2012).

[44] Ex. 6, Nelson Dep. at 19:22-20:14.

[redacted] **[[END CONFIDENTIAL]]** As such, GLCC provides traditional local telephone service to just over 100 customers.[46] **[[BEGIN CONFIDENTIAL]]** [redacted] **[[END CONFIDENTIAL]]**

C. The IUB Criticizes GLCC's Business Practices.

27. The IUB has been highly critical of GLCC's access stimulation arrangements. In 2009, for example, the IUB found after a full evidentiary hearing that GLCC had "failed to comply with the terms and conditions of [its] own intrastate access tariffs, so the calls in question were not subject to access charges and refunds and credits are required."[48] Specifically, the IUB held that GLCC's Free Calling Parties were not "end users" under GLCC's intrastate tariff. The IUB further noted that GLCC had not collected the charges that end users are supposed to pay under that tariff.[49] The IUB's findings as to GLCC were very similar to the findings made by the Commission with regard to another Iowa LEC engaged in the same practices.[50]

28. In criticizing GLCC's access stimulation schemes, the IUB explained that "[i]f access rates are set at a level intended to recover the costs of providing access services, then a carrier's willingness to share a substantial portion of its access revenue with a [Free Calling Party] is evidence that the carrier's rates are too high for the volume of traffic being

[45] *Id.* at 16:21-18:9.

[46] *Id.*; *see also* Ex. 15, August 2014 Monthly Report, *In re Great Lakes Commc'ns Corp.*, No. SPU-2011-004 (IUB Aug. 29, 2014).

[47] Ex. 6, Nelson Dep. at 19:12-21.

[48] Ex. 90, Final Order, *In re Qwest Commc'ns Corp.*, No. FCU-2007-002, 2009 WL 3052208, at **2 (IUB Sept. 21, 2009) ("*IUB Final Order*").

[49] *Id.* at **24-25.

[50] *See Qwest Commc'ns* v. *Farmers & Merchs. Mut. Tel. Co.*, 24 FCC Rcd. 14801 (2009) ("*Farmers I*"), *recon. denied*, 25 FCC Rcd. 3422 (2010) ("*Farmers II*"), *aff'd*, 668 F.3d 714 (D.C. Cir. 2011) ("*Farmers III*").

terminated."[51] The IUB also announced that it would issue new rules "intended to prevent this abuse in the future."[52] The IUB stated:

> [Its] concern is that in circumstances like those presented in this case where (1) a carrier's access rates are set with reference to a relatively low historical volume of access services, (2) the current and future volume of those services is considerably greater, (3) the incremental cost of increased traffic is less than the charge per minute, (4) the carrier is willing to share a substantial portion of its access revenues, and (5) the carrier has substantial market power, even monopoly power, over those services, then the result is an unreasonable rate or service arrangement, in the absence of any other factors.[53]

The IUB further stated that it would "initiate a subsequent proceeding asking Great Lakes … to show cause why [its] certificate[], issued pursuant to Iowa Code § 476.29, should not be revoked."[54]

29. While the IUB ultimately did not revoke GLCC's certificate, the IUB did find significant problems in GLCC's operations.[55] The IUB determined that for most of GLCC's existence, it "has *never* provided any services that are considered to be components of local exchange service."[56] Although GLCC told the IUB repeatedly that it would construct and operate local network facilities to provide customers in certain Iowa communities with competitive local telephone services, the IUB found those representations to have been

[51] Ex. 90, *IUB Final Order*, at *57.

[52] *Id.* at *2.

[53] *Id.* at **58-59.

[54] *Id* at *67. The IUB also noted that the "evidence in this record shows that Great Lakes … ha[s] few, if any, customers, and that Great Lakes has provided service in an exchange that is not covered by its [operating] certificates." *Id.*

[55] Ex. 16, *In re Great Lakes Commc'ns Corp.*, No. SPU-2011-004, **1-4, 11-31 (IUB Mar. 30, 2012) ("*IUB Great Lakes Order*").

[56] *Id.* at *12 (emphasis added).

"false."[57] In particular, the IUB noted that until very recently, GLCC had "no outside plant or facilities. Great Lakes has never provided access to [a] local exchange network and no person is able to make an outbound call or place a local exchange call through Great Lakes."[58] The IUB concluded that the record "show[ed] that GLCC failed to provide local exchange service in accordance with its certificate and tariff."[59]

30. In discussing the cause of these failings, the IUB faulted GLCC's management, finding that, "[i]n the end, Great Lake's 2006 claim that it was providing local exchange service in [a specified Iowa local exchange] was either a knowing falsehood or evidence that Great Lakes lacks the managerial ability to understand and provide any of the services it claimed to offer … . [C]ompany management that makes false or incompetent statements to the Board is not providing adequate service."[60] The IUB also found that management's failure to understand the "requirement that [GLCC's] tariffs accurately reflect the exchanges where Great Lakes is attempting to provide service demonstrates insufficient managerial ability to provide service in accordance with its tariffs; at worst, GLCC's management failures indicate a willingness to misrepresent its actual business plan to the Board."[61] Finally, the IUB determined, in the words of the Magistrate Judge, that "GLCC had not changed certain practices between 2009 and 2012 despite being directed to do so in the 2009 Order."[62]

[57] *Id.* at **12-13, 14 (finding that GLCC's representation that it offered local services in Lake Park was "untrue when it was made and is still false").

[58] *Id.* at *13.

[59] *Id.* at *31.

[60] *Id.* at **14-15.

[61] *Id.* at *21.

[62] *Great Lakes Commc'ns Corp.* v. *AT&T Corp.*, No. 13-04117, 2014 WL 2866474, at *11 (N.D. Iowa Jun. 24, 2014) ("Report and Recommendation") (citing *IUB Great Lakes Order*).

D. GLCC Revises Its Interstate Switched Access Tariff In Response To The *Connect America Order.*

31. At its inception in 2005, GLCC filed a tariff with the Commission governing switched access service ("GLCC FCC Tariff No. 1").[63] The terms and descriptions of switched access service in GLCC FCC Tariff No. 1 (but not the rates) were generally consistent with the terms in Qwest Corporation's tariff.[64] Qwest Corporation, now known as CenturyLink, is the price-cap ILEC with the lowest switched access rates in Iowa.[65]

32. For example, the GLCC tariff and the CenturyLink tariff defined "Switched Access Service" in a nearly identical manner. CenturyLink FCC Tariff No. 11 defined the service as follows:

> Switched Access Service, which is available to customers for their use in furnishing their services to end users, provides a two-point electrical communications path between a customer's premises and an end user's premises. It provides for the use of terminating, switching, transport facilities and common subscriber plant of the Company. Switched Access Service provides for the ability to originate calls from an end user's premises to a customer's premises, and to terminate calls from a customer's premises to an end user's premises in the LATA where it is provided.[66]

GLCC FCC Tariff No. 1 provided as follows:

> Switched Access Service, which is available to customers for their use in furnishing their services to end users, provides a communication path between a customer premises and an end user's premises. It provides for the use of common terminating, switching and trunking facilities and common subscriber plant of the Telephone Company. Switched Access Service provides for the ability to

[63] Ex. 17, GLCC FCC Tariff No. 1, filed Sept. 1, 2005.

[64] *Compare generally* Ex. 17, GLCC FCC Tariff No. 1, *with* Ex. 10, CenturyLink FCC Tariff No. 11. While GLCC's terms and conditions were similar to CenturyLink's, GLCC's rates were higher, because at that time, GLCC's rates were set on the view that GLCC was entitled to the Commission's rural exemption, *see* 47 C.F.R. § 61.26(e), and/or were benchmarked to a different incumbent LEC (Spencer Municipal) with higher rates.

[65] Habiak Decl. ¶¶ 2, 17; Ex. 18, Deposition of Michael Starkey ("Starkey Dep.") at 116:21-23, taken Nov. 11, 2014.

[66] Ex. 10, CenturyLink FCC Tariff No. 11, Orig. Page 6-1.

> originate calls from an end user's premises to a customer premises, and to terminate calls from a customer premises to an end user's premises in the LATA where it is provided.[67]

33. Likewise, both tariffs defined "End User" as "any ***customer*** of an interstate or foreign telecommunications service that is not a carrier."[68] Similarly, "Customer(s)" was defined in both tariffs as "any individual [or] entity which subscribes to the services offered under this [T]ariff, including [both] Interexchange Carriers (ICs) [and] [E]nd [U]sers."[69] And both tariffs provided that End Users would subscribe to "End User Access Service," along with local exchange services under local tariffs, and (ii) charge a specified tariffed rate to the End User for the tariffed End User Access Service.[70]

34. Further, both GLCC FCC Tariff No. 1 and CenturyLink FCC Tariff No. 11 offered "Direct[-]Trunked Transport," which provided for a direct connection with the carriers' end office switch.[71] CenturyLink FCC Tariff No. 1 defined the service as follows:

> (1) the transport between the serving wire center of the customer's premises and a Company end office, Company Hub or Company access tandem or between a Company Hub and a Company end office or Company access tandem on circuits dedicated to the use of a single customer, without switching at the Company access tandem or, (2) the transport with Tandem Signaling Information (i.e., CIC and 0ZZ codes or equivalent SS7 parameters) between the serving wire center of the customer-provided tandem premises and a Company end office subtending the customer-provided tandem or a Company Hub or between a Company Hub

[67] Ex. 17, GLCC FCC Tariff No. 1, Orig. Page 6-1.

[68] *Id.* at Orig. Page 2-61 (emphasis added); Ex. 10, CenturyLink FCC Tariff No. 11, Orig. Page 2-87 (emphasis added).

[69] Ex. 17, GLCC FCC Tariff No. 1, Orig. Page 2-59; Ex. 10, CenturyLink FCC Tariff No. 11, Orig. Page 2-82.

[70] Ex. 17, GLCC FCC Tariff No. 1, Orig. Pages 4-1, 4-3, 12-1; Ex. 10, CenturyLink FCC Tariff No. 11, Orig. Pages 4-1, 4-2, 4-11.

[71] Stip. ¶ 13; Ex. 17, GLCC FCC Tariff No. 1, Orig. Pages 2-60, 6-1, 6-3; Ex. 10, CenturyLink FCC Tariff No. 11, Orig. Pages 2-84, 6-9.

and a Company end office subtending the customer-provided tandem.[72]

GLCC FCC Tariff No. 1 similarly defined "Direct-Trunked Transport" as "transport from the serving wire center to the end office or from the serving wire center to the access tandem on circuits dedicated to the use of a single customer."[73]

35. In early 2012, following the issuance of the *Connect America Order*, GLCC filed a shorter, substantially revised tariff with the Commission.[74] Unlike GLCC's initial tariff, GLCC FCC Tariff No. 2 does not track the terms of CenturyLink FCC Tariff No. 11.[75]

36. In contrast with CenturyLink FCC Tariff No. 11 and its original tariff, the GLCC FCC Tariff No. 2 defines "Switched Access Service" as follows:

> Switched Access Service provides for the use of switching and/or transport facilities or services to enable a Buyer to utilize the Company's Network to accept Calls or to deliver Calls. Switched Access Service may be provided via a variety of means and facilities, where available, to be determined by the Company at its sole discretion.[76]

37. GLCC FCC Tariff No. 2 defines "Buyer" as an "Interexchange Carrier utilizing the Company's Access Service to complete a Call to or from End Users"[77] and "End User" as "any Customer of an Interstate or Foreign Telecommunications Service that is not a carrier. … An End User must pay a fee to the Company for telecommunications service."[78] The tariff further defines a "Customer of an Interstate or Foreign Telecommunications Service" as "any

[72] Ex. 10, CenturyLink FCC Tariff No. 11, 1st Rev. Page 2-84.
[73] Ex. 17, GLCC FCC Tariff No. 1, Orig. Page 2-60.
[74] Stip. ¶ 4.
[75] *See, e.g.*, Ex. 13, Toof Report ¶¶ 84, 90, 93-98.
[76] Ex. 8, GLCC FCC Tariff No. 2, Orig. Page 45.
[77] *Id.* at Orig. Page 7.
[78] *Id.* at Orig. Page 8.

person or entity who sends or receives an interstate or foreign Telecommunications service transmitted to or from a Buyer across the Company's Network, provided that the person or entity must pay a fee to the Company for telecommunications service."[79] GLCC FCC Tariff No. 2 also eliminated the provision for "End User Access Service," or any other service that an End User could subscribe to under, and purchase out of, the tariff.[80]

38. GLCC FCC Tariff No. 2 also separately defines "Access Service" as "includ[ing] services and facilities provid[ing] for the origination or termination of any interstate or foreign Telecommunication regardless of the technology used in transmission."[81] The tariff then adopts the definition of "Telecommunications" set forth in the Act: "The transmission, between or among points specified by the user, of information of the user's choosing, without change in the form or content of the information as sent or received."[82]

39. As revised, GLCC FCC Tariff No. 2 prohibits GLCC from assessing switched access charges on the IXC, unless the IXC is a "Buyer" of GLCC's services. And an IXC cannot be a "Buyer" unless GLCC's "Customer[s]" (the Free Calling Parties) have paid GLCC a fee for a telecommunications service, and thus qualify as "End User[s]."[83] Indeed, GLCC's CEO acknowledged that GLCC FCC Tariff No. 2 requires that, for an entity to be an "End User" for purposes of assessing switched access charges on calls to that entity, such entity must pay the LEC a fee for interstate telecommunications services.[84]

40. Finally, in amending its tariff in 2012, GLCC eliminated the "Direct Trunked

[79] *Id.* at Orig. Page 7.
[80] *See generally id.*
[81] *Id.* at Orig. Page 7.
[82] *Id.* at Orig. Page 9; 47 U.S.C. § 153(50).
[83] Ex. 8, GLCC FCC Tariff No. 2, Orig. Pages 7-9, 45.
[84] Ex. 6, Nelson Dep. at 26:10-29:22.

Transport" provision.[85] As a consequence, GLCC FCC Tariff No. 2 has no provision for a direct connection.[86]

E. GLCC's Relationships with its Free Calling Parties.

41. GLCC's relationships with its Free Calling Parties are generally governed by two agreements: a "Marketing Agreement" and a so-called "Telecommunications Service Agreement."[87] **[[BEGIN HIGHLY CONFIDENTIAL]]** [redacted] **[[END HIGHLY CONFIDENTIAL]] [[BEGIN CONFIDENTIAL]]** [redacted] **[[END CONFIDENTIAL]]**

[85] Stip. ¶ 13; *See* Ex. 13, Toof Report ¶ 86 & n.74.

[86] Ex. 6, Nelson Dep. at 126:9-15.

[87] Stip. ¶ 17; Ex. 6, Nelson Dep. at 40:6-42:7.

[88] **[[BEGIN HIGHLY CONFIDENTIAL]]** [redacted] **[[END HIGHLY CONFIDENTIAL]]**

[89] *Id.*

[90] Stip. ¶ 21; **[[BEGIN HIGHLY CONFIDENTIAL]]** [redacted] **[[END HIGHLY CONFIDENTIAL]]**; *see also* Ex. 6, Nelson Dep. at 77:14-78:13.

42. The Marketing Agreements are revenue sharing agreements.[91] **[[BEGIN HIGHLY CONFIDENTIAL]]** [redacted] **[[END HIGHLY CONFIDENTIAL]]**

43. GLCC provides its Free Calling Parties certain services pursuant to agreements titled "Telecommunications Service Agreements."[97] **[[BEGIN HIGHLY CONFIDENTIAL]]** [redacted]

[91] 47 C.F.R. § 61.3(bbb). The Commission has held that the excess revenues shared in access stimulation schemes such as these are ultimately passed on to unwitting consumers. *Connect America Order* ¶ 663; *cf. id.* ¶ 666 ("excess revenues that are shared in access stimulation schemes provide additional proof that the LEC's rates are above cost" and therefore unlawful).

[92] Stip. ¶ 20; *see, e.g.*, **[[BEGIN HIGHLY CONFIDENTIAL]]** [redacted] **[[END HIGHLY CONFIDENTIAL]]**; Ex. 6, Nelson Dep. at 75:8-76:5.

[93] **[[BEGIN HIGHLY CONFIDENTIAL]]** [redacted] **[[END HIGHLY CONFIDENTIAL]]**

[94] Stip. ¶ 19; Ex. 6, Nelson Dep. at 75:8-76:5.

[95] Ex. 13, Toof Report at Ex. DIT-4. That amount excludes all of the AT&T unpaid charges (plus interest) sought by GLCC in this litigation, **[[BEGIN HIGHLY CONFIDENTIAL]]** [redacted] **[[END HIGHLY CONFIDENTIAL]]**

[96] *Id.*

[97] Stip. ¶ 22.

[redacted]

[98] *See, e.g.*, **[[BEGIN HIGHLY CONFIDENTIAL]]** [redacted] **[[END HIGHLY CONFIDENTIAL]]**

[99] *See* **[[BEGIN HIGHLY CONFIDENTIAL]]** [redacted] **[[END HIGHLY CONFIDENTIAL]]**

[100] *See, e.g.*, **[[BEGIN HIGHLY CONFIDENTIAL]]** [redacted] **[[END HIGHLY CONFIDENTIAL]]**

[101] Ex. 7, Beneke Dep. at 11:25-14:16.

[102] Ex. 6, Nelson Dep. at 45:25-46:3; *see also* Ex. 7, Beneke Dep. 13:14-14:23.

[103] Stip. ¶ 21; Ex. 13, Toof Report at Ex. DIT-3; Ex. 18, Starkey Dep. at 195:19-196:13 (confirming accuracy of Toof Report at Ex. DIT-3); Ex. 42, Expert Report of Michael Starkey ("Starkey Report") at 8, Aug. 18, 2014.

[redacted]

[104] *Compare* Ex. 13, Toof Report at Exhibit DIT-3, *with* Ex. 43, GLCC Resp. to Interrogs. at Exhibit A. **[[BEGIN HIGHLY CONFIDENTIAL]]** [redacted] **[[END HIGHLY CONFIDENTIAL]]**

[105] Ex. 6, Nelson Dep. at 48:7-20, 60:25-61:23.

[106] *Id.* at 86:15-87:2; Ex. 18, Starkey Dep. at 265:14-269:7.

[107] *See* 47 C.F.R. § 52.21(n).

[redacted]

[108] Ex. 6, Nelson Dep. at 47:14-19; 54:6-55:25.

[109] *Id.* at 54:11-55:25.

[110] **[[BEGIN HIGHLY CONFIDENTIAL]]** [redacted] **[[END HIGHLY CONFIDENTIAL]]**

[redacted] **[[END HIGHLY CONFIDENTIAL]]**

G. GLCC Does Not Treat The Revenues It Receives From Its Free Calling Parties As Interstate Telecommunications Service Revenues For Purposes Of State Taxation Or For Reporting Requirements To The Commission.

47. Under Iowa law, taxes are owed on the sale of "all telecommunications service,"[114] and the definition of "telecommunications service" pertinent to that tax is essentially the same as the definition set forth in GLCC's revised tariff and the Communications Act.[115] **[[BEGIN CONFIDENTIAL]]** [redacted]

[111] *See, e.g.*, **[[BEGIN HIGHLY CONFIDENTIAL]]** [redacted] **[[END HIGHLY CONFIDENTIAL]]**

[112] Ex. 6, Nelson Dep. at 53:5-11; Ex. 7, Beneke Dep. at 12:13-15:6. **[[BEGIN HIGHLY CONFIDENTIAL]]** [redacted] **[[END HIGHLY CONFIDENTIAL]]**

[113] Ex. 13, Toof Report at Ex. DIT-3; Ex. 7, Beneke Dep. at 21:12-22:3.

[114] Iowa Admin. Code, Revenue, Ch. 224, Telecommunications Services, § 701-0224.1(423) ("The gross receipts from the sale of all telecommunication service and ancillary service are subject to the sales or use tax").

[115] *Id.* § 701-224.2(423) ("*Telecommunication service* means the electronic transmission, conveyance, or routing of voice, data, audio, video, or any other information or signals to a point, or between or among points") (internal quotations omitted).

[redacted] **[[END CONFIDENTIAL]] [[BEGIN HIGHLY CONFIDENTIAL]]** [redacted] **[[END HIGHLY CONFIDENTIAL]] [[BEGIN CONFIDENTIAL]]** [redacted] **[[END CONFIDENTIAL]]**

48. GLCC is also required to report to the Commission its interstate telecommunications revenues – including "End User ... Revenue Information."[120] The Commission uses the reported revenues to determine whether a telecommunications provider is required to contribute to the federal Universal Service Fund.[121] **[[BEGIN CONFIDENTIAL]]** [redacted]

[116] Ex. 6, Nelson Dep. at 68:15-69:12. **[[BEGIN CONFIDENTIAL]]** [redacted] **[[END CONFIDENTIAL]]**

[117] *Id.* at 66:16-68:14; Ex. 54, SMU Invoices to GLCC, GLCC_ATT_027118-83, at GLCC_ATT_027122.

[118] Stip. ¶ 25; Ex. 6, Nelson Dep. at 69:13-16.

[119] Stip. ¶ 25; Ex. 6, Nelson Dep. at 65:4-65:18, 69:13-16; Ex. 7, Beneke Dep. at 22:19-23:11.

[120] Ex. 55, GLCC Form 499-A, p. 5, Block 4-A (2014).

[121] *See In re Universal Serv. Contribution Methodology*, 28 FCC Rcd. 16037, ¶ 12 (2013) ("CLECs must report their end-user interstate revenues on the FCC Forms 499").

[redacted] **[[END CONFIDENTIAL]]**

H. GLCC's Access Charges To AT&T.

49. GLCC first began to bill AT&T for switched access services in late 2005 or early 2006, and the traffic volumes increased quickly.[125] Upon investigation of this rapid increase in traffic, AT&T sued GLCC and other carriers in Iowa federal court in early 2007.[126] A central issue in that case was whether GLCC had in fact provided interstate switched access service consistent with the terms of its tariff and with the Commission's rules regarding switched access service.[127]

50. **[[BEGIN CONFIDENTIAL]]** [redacted]

[122] Ex. 56, Declaration of Kellie Beneke ("Beneke Decl.") ¶¶ 2-3, executed Jan. 10, 2015.

[123] Ex. 57, 2014 Instructions to the TRW, Form 499-A, at 15. LECs that impose fees associated with completing interstate long distance calls, such as "end user access" services, report those revenues under the interstate category of Line 404.3. *Id.*

[124] Ex. 56, Beneke Decl. ¶¶ 2-3; Ex. 55, GLCC Form 499-A, at 3 (2014); Ex. 57, 2014 Instructions to the TRW, Form 499-A, at 35.

[125] Ex. 6, Nelson Dep. at 8:21-9:2; Habiak Decl. ¶ 6.

[126] Ex. 58, Complaint, *AT&T Corp.* v. *Great Lakes Commc'ns Corp.*, No. 07-0043 (S.D. Iowa Jan. 29, 2007); Habiak Decl. ¶7

[127] Ex. 13, Toof Report ¶ 61; Habiak Decl. ¶ 7.

[128] Ex. 13, Toof Report ¶ 63; Habiak Decl. ¶ 7.

[redacted] **[[END CONFIDENTIAL]]** disputes arose almost immediately over whether GLCC was properly billing AT&T for access service, and whether its new tariff – GLCC FCC Tariff No. 2 – properly implemented the requirements of the *Connect America Order*.[132] On May 2, 2012, AT&T notified GLCC that it did not believe that GLCC was providing service consistent with its tariff and that it would be withholding payment on GLCC's bills pending resolution of the disputes.[133] At no point since that time has AT&T assented to GLCC's continued provision of the services for which it has been billed and that are in dispute.[134]

I. GLCC's Refusal To Provide Direct Connection Arrangements To AT&T At Reasonable Rates.

52. For high access traffic volumes, carriers in many cases implement a direct

[129] Habiak Decl. ¶¶ 7-8; Ex. 59, Settlement Agreement and Release, at 1, dated May 26, 2011 ("2011 Settlement Agreement").

[130] Habiak Decl. ¶ 8; Ex. 59, 2011 Settlement Agreement, at 8-9.

[131] Habiak Decl. ¶ 8; Ex. 13, Toof Report ¶ 79.

[132] Ex. 13, Toof Report ¶ 80.

[133] *See* Ex. 60, Email from J. Nelson to R. Buntrock and D.G. Carter, GLCC_ATT_024841, dated May 2, 2012; Habiak Decl. ¶ 10.

[134] Ex. 18, Starkey Dep. at 327:6-23; Habiak Decl. ¶ 11.

connection arrangement because its flat-rate (rather than per-minute) pricing usually offers the most efficient, least costly, way to route large volumes of traffic to a LEC.[135]

53. GLCC's relationships with its Free Calling Parties generate enormous traffic volumes that dwarf those of CenturyLink, the lowest price cap LEC operating in the State of Iowa.[136] **[[BEGIN HIGHLY CONFIDENTIAL]]** [redacted] **[[END HIGHLY CONFIDENTIAL]].** In contrast, GLCC's expert has stated that CenturyLink terminated approximately one billion minutes of long distance calls per year to <u>all</u> of its end offices throughout the State of Iowa.[138] **[[BEGIN CONFIDENTIAL]]** [redacted] **[[END CONFIDENTIAL]]**

54. GLCC handles these significantly higher volumes with considerably less switching and related facilities than does CenturyLink. For example, CenturyLink provides service to a large percentage of the total access lines in Iowa, and it promotes and offers its

[135] Habiak Decl. ¶ 5; Ex. 13, Toof Report ¶¶ 87-89; *see also* Ex. 18, Starkey Dep. at 120:7-21 (testifying that "[w]hen traffic volumes are high enough, the flat fee associated with a dedicated or direct transport link can be cheaper to the IXC than paying per minute rate elements," like those assessed by GLCC and INS); Ex. 61, Rebuttal Expert Report of Michael Starkey at 5, submitted Nov. 5, 2014 ("Starkey Rebuttal Report").

[136] Habiak Decl. ¶¶ 2, 17, 26; Ex. 13, Toof Report ¶ 88.

[137] Stip. ¶ 26; Ex. 6, Nelson Dep. at 134:22-135:13.

[138] Ex. 18, Starkey Dep. at 109:11-110:6; Ex. 61, Starkey Rebuttal Report at 5 & Ex. F (providing MOUs for "Qwest Corp-IA").

[139] Ex. 18, Starkey Dep. at 135:21-136:24; Ex. 13, Toof Report ¶ 88.

network services to a broad array of businesses and residences.[140] Between 2012 and 2015, CenturyLink served more than 50 times the number of access lines in Iowa that Great Lakes served.[141] Further, CenturyLink uses a large array of network equipment and facilities, including numerous end office switches (as well as local loops) to connect to its customers.[142] In that connection, CenturyLink has about 22 stand-alone end office switches and 28 host end office switches (plus tandem switches and many remote switches) in the State of Iowa.[143] In contrast, GLCC operates in a few small towns in northwestern Iowa, and its CEO testified that it operates only a single switch in Spencer.[144] In addition, GLCC serves a minimal amount of traditional customers, and the overwhelming percentage of its traffic goes to a few Free Calling

[140] Ex. 62, SEC Form 10-K, FYE Dec. 31, 2015, CenturyLink, Inc., at 3, 6-8, 13-14, filed Feb. 24, 2016; Ex. 63, IUB, 2015 Telephone Utility Report Annual Information, https://iub.iowa.gov/sites/default/files/files/records_center/annual_reports/telephone/2015-telephone.xls ("2015 IUB Report") (Local Exchange Carrier tab showing Qwest Corporation d/b/a CenturyLink QC provides service to 40 percent of total access lines used by LECs in Iowa); Ex. 64, IUB, 2014 Telephone Utility Report Annual Information, https://iub.iowa.gov/sites/default/files/files/records_center/annual_reports/telephone/2014-telephone.xls ("2014 IUB Report") (43 percent); Ex. 65, IUB, 2013 Telephone Utility Report Annual Information, https://iub.iowa.gov/sites/default/files/files/records_center/annual_reports/telephone/2013%20Telephone.xls, ("2013 IUB Report") (45 percent); Ex. 66, IUB, 2012 Telephone Utility Report Annual Information, https://iub.iowa.gov/sites/default/files/files/records_center/annual_reports/telephone/2012%20Telephone.xls ("2012 IUB Report") (46 percent).

[141] *See* Ex. 63, 2015 IUB Report (showing that Qwest Corporation d/b/a CenturyLink QC provided service to 39 times more access lines than Great Lakes Communication Corp. d/b/a IGL Teleconnect); Ex. 64, 2014 IUB Report (49 times); Ex. 65, 2013 IUB Report (62 times); Ex. 66, 2012 IUB Report (62 times).

[142] Habiak Decl. ¶ 28; Ex. 62, SEC Form 10-K, FYE Dec. 31, 2015, CenturyLink, Inc., at 8, filed Feb. 24, 2016.

[143] Habiak Decl. ¶ 29.

[144] Stip. ¶ 8; Ex. 6, Nelson Dep. at 20:15-24; 91:12-16, 95:6-25. An industry database indicates that GLCC may have a few additional facilities, but it is not clear if those facilities are operational or comparable to those operated by CenturyLink. In any event, even if GLCC has a few additional switch facilities, GLCC's network is plainly not comparable to that of CenturyLink's Iowa network.

Parties.[145] The Free Calling Parties have equipment located at or near GLCC's facilities.[146]

55. While CenturyLink typically delivers traffic at the volumes at issue in this case via a direct connection arrangement,[147] GLCC has refused to offer AT&T such an arrangement despite handling significantly more traffic, with significantly less facilities, than CenturyLink.[148] As discussed above, GLCC's initial tariff mirrored that of CenturyLink's tariff, offering a direct connection arrangement to interconnecting carriers.[149] However, in response to the *Connect America Order*, GLCC revised its tariff in 2012 and eliminated the "Direct-Trunked Transport" service it had previously offered.[150]

56. Around the same time, AT&T requested a direct connection from its facilities to those of GLCC.[151] GLCC refused this request,[152] **[[BEGIN HIGHLY CONFIDENTIAL]]**

[145] Ex. 6, Nelson Dep. at 16:21-18:9, 19:12-20:14.

[146] *Id.* at 96:1-98:22.

[147] Ex. 13, Toof Report ¶ 11.

[148] Habiak Decl. ¶¶ 15-16.

[149] Ex. 17, GLCC FCC Tariff No. 1, Orig. Pages 2-60, 6-3, 10-11; Ex. 10, CenturyLink FCC Tariff No. 11, Orig. Pages 2-6, 2-84, 6-9, 6-12, 6-225.

[150] Stip. ¶ 13; Ex. 6, Nelson Dep. at 126:9-15.

[151] Habiak Decl. ¶ 15; Ex. 6, Nelson Dep. at 120:2-8; Ex. 67, Deposition of John Habiak ("Habiak Dep.") at 164:12-165:2, taken Nov. 13, 2014.

[152] Habiak Decl. ¶ 15.

[153] Ex. 6, Nelson Dep. at 120:9-121:6.

[154] Ex. 18, Starkey Dep. at 116:10-12; *see also* Ex. 6, Nelson Dep. at 120:20-121:1.

[redacted] **[[END HIGHLY CONFIDENTIAL]]**

57. Because GLCC does not offer a direct connection arrangement by tariff, and has otherwise refused to provide such an arrangement to AT&T under a contract with terms comparable to CenturyLink's service, AT&T does not have a direct connection with GLCC's switch in Spencer. Instead, AT&T hands off its traffic to an intermediate carrier, INS. The Commission has described INS, and its role in routing long distance traffic to small carriers with low traffic volumes as follows:

> [T]o carry long-distance traffic efficiently to remote local exchanges in Iowa, about 135 rural carriers formed a [Centralized Equal Access ("CEA")] provider called … INS. They developed this arrangement in part because the costs of hauling long-distance traffic to and from each of the many small carriers were high, and competing IXCs found it too "expensive … to provide their own facilities to each of these small exchanges, given the relatively low amount of [long distance] traffic they generate … . IXCs generally [deliver traffic] by interconnection with the INS access tandem in Des Moines. INS then delivers the long-distance traffic received from IXCs over its fiber ring to one of sixteen POIs located across the state. At the POIs, the Iowa LECs connect with the INS network and transport interstate switched access traffic between their POIs and their end office switches.[156]

58. Unlike the traditional traffic handled by INS, the traffic at issue in this case almost entirely comprises long distance calls that are directed to GLCC's Free Calling Parties.[157] The pertinent aspects of the routing of such calls are as follows: (1) AT&T carries

[155] Ex. 6, Nelson Dep. at 122:1-125:20. To resolve a discovery dispute in the District Court, GLCC produced its agreement, but only for use in the District Court proceeding, and provided that, if AT&T initiated a complaint at the Commission, it could request the document to be produced at that juncture. Although arguably that is no longer necessary in light of the Protective Order in this case, out of an abundance of caution, AT&T is requesting production of this agreement (and any other such agreements that GLCC has for termination of long distance traffic).

[156] *Alpine* ¶¶ 6-7.

[157] Habiak Decl. ¶ 4.

the calls over its long distance network and delivers them to the INS tandem switch in Des Moines; (2) INS transports the calls over its fiber network from Des Moines to GLCC's point of interconnection in Spencer (a total distance of approximately 133 miles); (3) GLCC transports the calls to its nearby switch in Spencer; (4) GLCC's switch at Spencer then directs the calls to GLCC's facilities in Lake Park, where the calls are connected to the equipment of the Free Calling Parties associated with the called number.[158]

59. By failing to offer a direct connection arrangement via tariff, GLCC has forced AT&T (and therefore its customers) to pay significant amounts for INS's service. Pursuant to its federal tariff, INS currently bills AT&T $0.00896 per minute to deliver the long distance traffic at issue from INS's Des Moines tandem switch to Spencer.[159] In that connection, INS has billed AT&T for approximately **[[BEGIN CONFIDENTIAL]]**[redacted] **[[END CONFIDENTIAL]]** in access charges during the relevant period.[160] If GLCC had agreed to provide AT&T with direct connection arrangements, AT&T could have avoided INS's expensive services and delivered the traffic at issue to Spencer via a less costly means.[161] For example, under CenturyLink's tariff, the monthly rate for a direct connection between Des Moines and Spencer would be approximately **[[BEGIN CONFIDENTIAL]]** [redacted] **[[END CONFIDENTIAL]]** per DS3 on a flat-rate basis, which given the minutes at issue would result in per-minute rates that range between **[[BEGIN CONFIDENTIAL]]**[redacted] **[[END CONFIDENTIAL]]**. As such, the savings to AT&T from a direct connection arrangement with GLCC over the period of this dispute would range from approximately

[158] Stip. ¶ 12; Ex. 6, Nelson Dep. at 96:1-98:22.

[159] Ex. 12, INS FCC Tariff No. 1, 12th Rev. Page 145, 1st Rev. Page 147, Orig. Page 147.1; *see also* Ex. 67, Habiak Dep. at 105:6-106:18; Habiak Decl. ¶ 20.

[160] Habiak Decl. ¶ 20.

[161] *Id.* ¶ 21.

[[BEGIN CONFIDENTIAL]] [redacted]

[[END CONFIDENTIAL]]

COUNT I

(Refusal To Provide Direct Connection Arrangements In Violation Of Section 201(b) Of The Act)

60. AT&T repeats and re-alleges each and every allegation contained in paragraphs 1 to 59 of this Formal Complaint as if set forth fully herein.

61. Seeking to secure an efficient and lower cost means of termination of calls bound for GLCC, AT&T requested that GLCC provide a "direct connection" between AT&T's facilities and GLCC's end office switch. Direct connections avoid the need to incur any tandem switching or per-minute transport costs.

62. GLCC has refused to provide a direct connection with AT&T at rates equal to those of CenturyLink, thus forcing AT&T to deliver traffic to INS and to incur the associated costs for tandem switching and per minute transport.[163]

63. AT&T estimates that a direct connection arrangement would have reduced AT&T's costs for delivering traffic generated by GLCC's access stimulation arrangements by between **[[BEGIN CONFIDENTIAL]]** [redacted]

[[END CONFIDENTIAL]]

64. GLCC's refusal to grant AT&T a direct connection violates the Commission's *Connect America Order* and Section 201(b) of the Act, 47 U.S.C. § 201(b).[165] Section 201(b)

[162] *Id.* ¶ 24.

[163] *See supra* ¶¶ 56-59.

[164] *See supra* ¶ 59.

[165] *See* Legal Analysis, Part I.

provides that "[a]ll … practices … in connection with … communication service[] shall be just and reasonable[] and any … practice … that is unjust or unreasonable is declared to be unlawful."

65. Because access stimulation "almost uniformly" produces "inflated profits" for the LECs on their access services (which rendered the rates for those services … "unjust and unreasonable under Section 201(b) of the Act,")[166] the Commission adopted reforms requiring access stimulating LECs, like GLCC, to reduce their rates to a level equal to those of the lowest-priced LEC with rates regulated by the Commission's price cap rules.[167]

66. In Iowa, CenturyLink is the price cap LEC with the lowest-priced access rates.

67. As noted above, because AT&T's long distance network is not directly connected to GLCC's local facilities, AT&T must purchase tandem switching and switched transport services from INS for calls to be delivered to GLCC's facilities in Spencer.[168] INS bills AT&T a per-minute rate for these calls.[169] Given the extraordinarily high volumes of minutes generated by GLCC's access stimulation arrangements, the resulting charges billed to AT&T by INS are correspondingly large.

68. A direct connection arrangement based on the terms of CenturyLink's tariff would be substantially less expensive than the current arrangement in which AT&T incurs INS's tariffed charges. GLCC has refused to provide such an arrangement at rates equal to those offered by CenturyLink.

69. CenturyLink offers a direct connection arrangement under its tariff. If GLCC

[166] *Connect America Order* ¶ 657; *id.* ¶¶ 662-64.
[167] *Id.* ¶¶ 689-90.
[168] *See supra* ¶ 58.
[169] *See supra* ¶ 59.

were to offer a similar direct connection arrangement for its access stimulation traffic, AT&T's costs for transporting such traffic to and from GLCC would have been reduced by between **[[BEGIN CONFIDENTIAL]]** [redacted] **[[END CONFIDENTIAL]]**

70. Accordingly, GLCC violated its obligations under the *Connect America Order* because it has not matched the rates of CenturyLink, the price cap LEC with the lowest rates for switched access service in Iowa. If AT&T were delivering the volumes of traffic at issue to CenturyLink, AT&T would be paying CenturyLink's direct connection rate. But GLCC is causing AT&T to incur substantially higher access costs on account of its refusal to provide a direct connection or equivalent service.

71. For the foregoing reasons, GLCC's refusal to provide a direct connection arrangement with AT&T is an unjust and unreasonable practice in violation of Section 201(b) of the Act, 47 U.S.C. § 201(b).

72. As a direct and proximate result of GLCC's violation of the Act, AT&T is being unjustly and unreasonably billed for unnecessary high-priced transport arrangements.

COUNT II

(Failure To Provide Telecommunication Service For A Fee In Violation Of Sections 201(b) And 203(c) Of The Act)

73. AT&T repeats and re-alleges each and every allegation contained in paragraphs 1 to 72 of this Formal Complaint as if set forth fully herein.

74. Section 203(c) of the Act, 47 U.S.C. § 203(c), provides that "[n]o carrier … shall charge, demand, or collect, or receive a greater or less or different compensation for such

[170] *See id.*

communication or for any service" except as provided in their filed tariffs. Section 201(b) of the Act, 47 U.S.C. § 201(b), provides that "[a]ll … practices … in conjunction with … communications service[] shall be just and reasonable[] and any … practice … that is unjust or unreasonable is declared to be unlawful."

75. GLCC's bills to AT&T are almost entirely comprised of charges for interstate switched access services associated with calls to and from the Free Calling Parties with which GLCC has partnered as part of its access stimulation activities. However, the terms of GLCC's federal interstate switched access tariffs, and Commission precedent, confirm that GLCC has not actually provided switched access services to AT&T as defined by its tariff or by the governing Commission rules.

76. GLCC's tariff states that GLCC can provide "Switched Access Services" for calls to and from the Free Calling Parties only if those entities are "End Users."[171] And GLCC's tariff defines "End Users" as a "Customer of an Interstate or Foreign Telecommunications Service" that "pay a fee to [GLCC] for telecommunications service."[172] Thus, to be an "End User" under the tariff, the Free Calling Party must pay GLCC a fee for interstate telecommunications service.[173] This tariff provision comports with the Commission's rules, which, as explained in *Northern Valley I*, likewise provide that access charges can only be imposed on calls to "end users," and that to be an "end user" a person or entity must pay a fee for interstate telecommunications services.

77. The Free Calling Parties with which GLCC partnered are not paying GLCC a fee

[171] Ex. 8, GLCC FCC Tariff No. 2, Orig. Pages 7-8, 45-48 (definitions and descriptions associated with "Switched Access Services").

[172] *Id.*; *Northern Valley I* ¶ 9.

[173] *See supra* ¶ 39.

for any telecommunications service, nor for any interstate service.[174] **[[BEGIN HIGHLY CONFIDENTIAL]]** [redacted] **[[END HIGHLY CONFIDENTIAL]]**

78. GLCC's contemporaneous reporting and tax practices further demonstrate that GLCC did not receive any fees for interstate telecommunications service from its Free Calling Parties. **[[BEGIN CONFIDENTIAL]]** [redacted] **[[END CONFIDENTIAL]]**

79. Because switched access services are defined by GLCC's tariff as services to an End User that is paying a fee to GLCC for interstate or foreign telecommunications, the Free Calling Parties' payment of a fee for non-telecommunications services is irrelevant. Accordingly, the Free Calling Parties are not "End Users" under GLCC's tariff or the Commission's rules.

[174] *See* Legal Analysis Part II.A.

[175] *See id.*; Ex. 13, Toof Report ¶ 97.

[176] *See supra* ¶ 49.

[177] *See supra* ¶ 48.

80. For the foregoing reasons, GLCC violated its revised tariff and the Commission's rules when it billed AT&T for access charges on calls to the Free Calling Parties. Such actions violated Section 203(c) of the Act, 47 U.S.C. § 203(c), and was an unjust and unreasonable practice in violation of Section 201(b) of the Act, 47 U.S.C. § 201(b).[178]

81. As a direct and proximate result of GLCC's violation of the Act, AT&T is being unjustly and unreasonably billed for access charges.

COUNT III

(Declaratory Ruling on Referred Issue 4)

82. AT&T repeats and re-alleges each and every allegation contained in paragraphs 1 to 81 of this Formal Complaint as if set forth fully herein.

83. Under the Act and the Commission's rules and Orders, a CLEC can obtain compensation for regulated access services in only one of two ways: (1) by tariff; or (2) by express contract.[179] Those are the exclusive bases for GLCC to recover access charges or other intercarrier compensation from AT&T. Furthermore, states lack jurisdiction over interstate telecommunications services, and thus state law causes of action cannot provide a basis of recovery for such services.[180] To the extent state law causes of action are permitted to recover for such services, the state law causes of action also conflict with federal law, including the

[178] *See, e.g.*, *AT&T Corp.* v. *YMAX Commc'ns Corp.*, 26 FCC Rcd. 5742, ¶ 34 & n.105 (2011)

[179] *See, e.g.*, 47 U.S.C. §§ 203(c), 211; *Northern Valley I* ¶¶ 6, 11; *AT&T Corp.* v. *All American Tel. Co.*, 28 FCC Rcd. 3477, ¶ 37 (2013) (until a CLEC files valid interstate tariffs under Section 203 of the Act or enters into contracts with IXCs for the access services it intends to provide, it lacks authority to bill for those services"); *In re Access Charge Reform*, 16 FCC Rcd. 9923 (2001).

[180] *See* Legal Analysis, Part III.A.

Commission's comprehensive regime for access charges and the filed rate doctrine.[181]

84. Therefore, all mechanisms for recovery of charges for the calls at issue based on state law – whether quantum meruit, unjust enrichment or any other state-law cause of action or theory of recovery – are preempted by the Act and the Commission's rules and Orders.[182]

85. Accordingly, because its state law causes of action are preempted, and because, for the reasons explained above, GLCC's revised tariff does not permit the recovery of the charges at issue and the parties have no express contract obligating AT&T to pay such charges, GLCC has no basis to recover any of the billed charges.

PRAYER FOR RELIEF

86. Wherefore, and pursuant to Section 1.721(a)(7) of the Commission's rules, 47 C.F.R. § 1.721(a)(7), Complainant AT&T requests that the Commission:

a. Find that Defendant GLCC has violated Section 201(b) of the Act, 47 U.S.C. § 201(b), by refusing to offer a direct connection arrangement with AT&T, at the reasonable, benchmark rate, despite the fact that, for the volumes of traffic at issues in this case, a direct connection arrangement is CenturyLink's lowest tariffed rate;

b. Find that Defendant GLCC has violated Sections 203(c) and 201(b) of the Act, 47 U.S.C. §§ 203(c) and 201(b), by unlawfully billing AT&T for switched access service, pursuant to GLCC's revised tariff, despite the fact that its Free Calling

[181] *See id.* at Part III.B-D.

[182] *See id.* at Part III. While AT&T does not believe that GLCC is entitled to recover any amounts pursuant to its alternative theories of recovery, if the Commission were to conclude otherwise, the applicable rate for such service could not exceed the intrastate rate (*i.e.*, $0.0007 per MOU) that GLCC proposed to charge for intrastate switched access service. *See id.* at Part IV; Ex. 13, Toof Report ¶¶ 125-29.

Parties are not end users that have paid a fee for interstate telecommunications service;

c. Find that any claim by Defendant GLCC for compensation under quantum meruit, quasi-contract, constructive contract, unjust enrichment, or any other state law theory, is preempted by the Act; and

d. Find that Defendant GLCC must (i) refund amounts they improperly billed to AT&T, and which AT&T paid, in amounts to be determined in a subsequent proceeding, and (ii) pay AT&T all consequential damages arising from GLCC's violations of the Act, including but not limited to any charges that AT&T has or will incur because of GLCC's failure to provide a direct connection at just and reasonable rates.[183]

[183] *See* 47 U.S.C. § 206.

Respectfully submitted,

James F. Bendernagel, Jr.

Letty Friesen
AT&T SERVICES, INC
161 Inverness Drive West
Englewood, CO 80112
(303) 299-5708
(281) 664-9858 (fax)

James F. Bendernagel, Jr.
Michael J. Hunseder
E. Benton Keatley
SIDLEY AUSTIN LLP
1501 K Street NW
Washington, DC 20005
(202) 736-8000
(202) 736-8711 (fax)

Brian A. McAleenan
Benjamin R. Brunner
SIDLEY AUSTIN LLP
One South Dearborn
Chicago, IL 60603
(312) 853-7000
(312) 853-7036 (fax)

Dated: August 16, 2016

Counsel for AT&T Corp.

PUBLIC VERSION

CERTIFICATE OF FEE PAYMENT

I hereby declare under penalty of perjury that (1) AT&T paid the $230 filing fee for the Formal Complaint (pursuant to Commission Rule 1.1106, 47 C.F.R. § 1.1106) by means of a wire transfer by Benjamin R. Brunner of Sidley Austin LLP, and submitted simultaneously with the Formal Complaint, and (2) AT&T Corp.'s FRN is 0005937974.

Respectfully submitted,

James F. Bendernagel, Jr.

PUBLIC VERSION

CERTIFICATE OF SERVICE

I hereby certify that on August 16, 2016, I caused a copy of the foregoing Formal Complaint, as well as all accompanying materials, to be served as indicated below to the following:

Marlene H. Dortch
Office of the Secretary
Market Disputes and Resolution Division
Federal Communications Commission
445 12th Street SW
Washington, DC 20554
(Original of the Public Version, the Confidential Version, the Highly Confidential Version via Hand Delivery)

Lisa Griffin
Anthony DeLaurentis
Sandra Gray-Fields
Christopher Killion
Enforcement Bureau
Federal Communications Commission
445 12th Street SW
Washington, DC 20554
(One Copy of the Public Version, the Confidential Version, and the Highly Confidential Version via E-mail)

Joseph P. Bowser
G. David Carter
Innovista Law PPLC
1200 18th Street NW
Suite 700
Washington, DC 20036
(202) 750-3500
(202) 750-3503 (fax)
(One Copy of the Public Version, Confidential Version, and Highly Confidential Version via E-mail)

Respectfully submitted,

James F. Bendernagel, Jr.

Exhibit 9

Form Filer Database, Detailed Information for AT&T

Announcing a new FCC.gov
Tell us what you think and help shape the future »

FCC Form 499 Filer Database

DETAILED INFORMATION

Form 499 Filer 806172 RSS Feed

Filer Identification Information:

499 Filer ID Number:	**806172**
Registration Current as of:	**Apr 3 2017 12:00AM**
Legal Name of Reporting Entity:	**AT&T Corp.**
Doing Business As:	**AT&T Corp.**
Principal Communications Type:	**Interexchange Carrier (IXC)**
Universal Service Fund Contributor:	**Yes**
(Contact USAC at 888-641-8722 if this is not correct.)	
Holding Company:	**AT&T INC**
Registration Number (CORESID):	**0005937974**
Management Company:	
Headquarters Address:	**One AT&T Way**
City:	**Bedminster**
State:	**NJ**
ZIP Code:	**079212694**
Customer Inquiries Address:	**One AT&T Way**
City:	**Bedminster**
State:	**NJ**
ZIP Code:	**079212694**
Customer Inquiries Telephone:	**800-222-0400 Ext:**
Other Trade Names:	**AT&T** **ACC Business** **AT&T Alaska**

Agent for Service of Process:

Local/Alternate Agent for Service of Process:	
Telephone:	
Extension:	
Fax:	
E-mail:	
Business Address of Agent for Mail or Hand Service of Documents:	
City:	
State:	
ZIP Code:	
D.C. Agent for Service of Process:	**Jeanine Poltronieri** **AT&T Services, Inc**
Telephone:	**202-457-2042**
Extension:	
Fax:	
E-Mail:	**jp7321@att.com**
Business Address of D.C. Agent for Mail or Hand Service of Documents:	**1120 20th Street, NW** **Suite 1000**
City:	**Washington**
State:	**DC**
ZIP Code:	**20036**

FCC Registration Information:

Chief Executive Officer:	**Thaddeus Arroyo**
Business Address:	**208 S. Akard St.**
City:	**Dallas**
State:	**TX**
ZIP Code:	**75202**
Chairman or Other Senior Officer:	**Julianne Galloway**
Business Address:	**208 S. Akard St.** **Room 1824**
City:	**Dallas**
State:	**TX**
ZIP Code:	**75202**
President or Other Senior Officer:	**Wayne Wirtz**
Business Address:	**208 S. Akard St.** **Room 3212**
City:	**Dallas**
State:	**TX**
ZIP Code:	**75202**

Jurisdictions in Which the Filing Entity Provides Telecommunications Services:

PUBLIC VERSION

Alabama
Alaska
American Samoa
Arizona
Arkansas
California
Colorado
Connecticut
Delaware
District of Columbia
Florida
Georgia
Guam
Hawaii
Idaho
Illinois
Indiana
Iowa
Johnston Atoll
Kansas
Kentucky
Louisiana
Maine
Maryland
Massachusetts
Michigan
Midway Atoll
Minnesota
Mississippi
Missouri
Montana
Nebraska
Nevada
New Hampshire
New Jersey
New Mexico
New York
North Carolina
North Dakota
Northern Mariana Islands
Ohio
Oklahoma
Oregon
Pennsylvania
Puerto Rico
Rhode Island
South Carolina
South Dakota
Tennessee
Texas
Utah
U.S. Virgin Islands
Vermont
Virginia
Wake Island
Washington
West Virginia
Wisconsin
Wyoming

Use browser "Back" button to return to results page.

Federal Communications Commission
445 12th Street SW
Washington, DC 20554
More FCC Contact Information...

Phone: 1-888-CALL-FCC (1-888-225-5322)
TTY: 1-888-TELL-FCC (1-888-835-5322)
Fax: 1-866-418-0232

- Privacy Policy
- Website Policies & Notices
- Required Browser Plug-ins
- Freedom of Information Act

Exhibit 10

FCC, Equal Access Report
(C.C.B. Nov. 3, 1997)

PUBLIC VERSION

DISTRIBUTION OF EQUAL ACCESS LINES AND PRESUBSCRIBED LINES

James Eisner
Katie Rangos

Industry Analysis Division
Common Carrier Bureau
Federal Communications Commission
November 1997

This report is available for reference in the Common Carrier Bureau's Public Reference Room, 2000 M Street, N.W., Room 575. Copies may be purchased by calling International Transcription Services, Inc. (ITS) at (202) 857-3800. The report can be downloaded [file name EQACC-97.ZIP] from the FCC-State Link internet site at http://www.fcc.gov/ccb/stats on the World Wide Web. The report can also be downloaded from the FCC-State Link computer bulletin board system at (202) 418-0241.

Distribution Of Equal Access Lines and Presubscribed Lines

This report summarizes the conversion to equal access from 1984 through 1996. In addition, this report summarizes information on the number of lines presubscribed to long distance carriers by state and by study area.[1] The data allow us to determine shares of presubscribed lines for each state and for each study area. This report supplements nation-wide information on long distance market shares and presubscribed lines that is published in the report Long Distance Market Shares.

Until recently, information on the number of presubscribed lines served by each long distance carrier was necessary in connection with the universal service program. Following passage of the Telecommunications Act of 1996, in accordance with the specific mandate set forth in the Act, the FCC changed its rules on universal service. At the end of 1996, the National Exchange Carrier Association (NECA) stopped collecting the underlying data used in this report. Thus, the data presented in this report will not be updated in future reports.

Equal Access

Equal access refers to a class of service whereby all long distance service providers receive equivalent connections to the local exchange carrier's network. Where a local exchange carrier serves customers using equal access switches, those customers can utilize their preferred long distance provider by dialing "1" plus the ten digit telephone number they want to reach.

At the end of 1996, 99.4% of the nation's telephone lines had been converted to equal access. Bell operating companies (BOCs) had converted almost 100% of their lines to equal access and other companies had converted 97.6% of their lines. About 740,000 lines were converted to equal access in 1996.

Where equal access is available, each customer is asked to select a long distance carrier. Thereafter, all of the customer's long distance calls are normally routed to the carrier that the customer has chosen. The customer is said to be "presubscribed" to the carrier selected. Where equal access is not yet available, the use of long distance carriers other than AT&T usually requires special dialing arrangements--such as dialing a seven digit local telephone number and entering a personal identification number before dialing a long distance call. In areas where equal access is not yet available, all lines are presubscribed to AT&T.

When AT&T divested its local telephone companies at the beginning of 1984, the BOCs assumed an obligation to make equal access generally available. The first offices were converted to equal access in the summer of 1984. By the end of 1985, equal access had been provided to half of all the lines served by BOCs. Thereafter, the pace of conversion slowed as the process began to focus on older, smaller offices. Nevertheless, by December 31, 1996, five of the original seven regional

---

[1] A study area is a local exchange carrier's operations in a given state.

BOCs created in 1984 had converted all of their lines to equal access and the remaining two regional BOCs provided equal access to more than 99.9% of their customers.[2]

BOCs serve about three-quarters of the nation's telephone lines. The remaining lines are served by about 1,300 other local telephone companies. In 1985, GTE (the largest of these other local telephone companies) agreed to provide equal access to its customers; by December of 1996, 97.9% of GTE's lines had been converted to equal access. Later in 1985, the FCC ordered most smaller telephone companies to provide equal access, although certain smaller companies without computerized switches were exempt from this requirement.

Although 99.4% of the nation's lines have been converted to equal access, the sheer size of the industry--158.7 million presubscribed telephone lines--means that about 915,000 lines do not yet receive equal access.

Presubscribed Lines

State-by-state market shares for AT&T, MCI and Sprint are presented from the end of 1989 to the end of 1996. AT&T's nation-wide market share of presubscribed lines declined from 77.4% to 63.1% from December 1989 to December 1996. During the same period, market share for carriers other than AT&T, MCI and Sprint increased from 3.7% to 14.8%.

Data on presubscribed lines indicates that competition is developing in almost all areas of the country. In study areas that have completely implemented equal access, 98.8% of the study areas had at least five long distance carriers providing service.

Discussion of Tables

Table 1 traces equal access from 1984 though 1996. (As explained in the technical notes, data for the period prior to 1988 are not entirely compatible with post-1988 data.) As shown in Table 1, the number of telephone lines converted to equal access in the United States grew from 0% at the end of June 1984 to 50.4% at the end of June 1986, and to 99.4% by the end of 1996.

Table 2 presents a state-by-state summary of telephone lines converted to equal access at the end of 1996. In addition, Table 2 provides information on the number of local telephone companies providing service in each state,[3] as well as an estimate of the number of long distance carriers and long distance market shares. Although over 99% of the nation's lines had been converted to equal

---

[2] Ameritech, Bell Atlantic, Bell South, Nynex and Pacific Telesis provide equal access to all of their customers. Southwestern Bell and U.S. West provide equal access to more than 99.9% of their customers.

[3] Some companies operate in more than one state and, consequently, are counted more than once. Ameritech, for example, serves five states and is counted in each.

access by the end of 1996, equal access was provided to all of the customers in only six states (Connecticut, Delaware, Maryland, Massachusetts, New Jersey and Rhode Island) and the District of Columbia. Alaska was the only state with fewer than 90% of its lines converted to equal access.

In each state other than Alaska, more than 20 long distance carriers provide service. The number of long distance carriers serving a state in the continental United States ranges from 24 in the District of Columbia to 159 in Texas.[4] In the continental United States, AT&T's market share ranges from 38.8% in Connecticut to 72.1% in Rhode Island. With the exception of Connecticut, AT&T's market share is highest in the northeast. AT&T's market share exceeds 70% in Maine, Massachusetts, New Hampshire, New Jersey and Rhode Island.

The information presented in Tables 3 and 4 suggests that competition in the long distance market exists in almost all study areas with equal access regardless of size. Table 3 shows the average number of long distance carriers providing service in study areas with equal access by the size of the study area. The average number of long distance carriers serving a study area ranges from 5.9 for study areas with fewer than 250 presubscribed lines to 99.5 for study areas with at least 2,500,000 presubscribed lines.

Table 4 shows long distance market shares by the size of the study area at the end of 1996. MCI's and Sprint's market shares generally increase with the number of presubscribed lines in the study area. The market share for carriers other than AT&T, MCI and Sprint is highest in study areas with between 10,000 and 250,000 presubscribed lines.

Not all access lines are presubscribed to long distance carriers. Some customers have chosen to have long distance calls limited (toll restricted) and some customers have not selected a long distance carrier (no-PIC). Thus, total access lines include presubscribed lines plus toll restricted & no-PIC lines. Table 5 summarizes, by study area, the number of long distance carriers, equal access lines, presubscribed lines by carrier, toll restricted & no-PIC lines and total access lines as of December 31, 1996. Toll restricted/no-PIC access lines have increased from 2.4% to 4.8% from December 1989 to December 1996.

The five long distance carriers with the most presubscribed lines nation-wide have presubscribed lines in almost every study area that has implemented equal access. AT&T, MCI and Sprint have presubscribed lines in virtually 100% of the study areas. WorldCom and Excel have presubscribed lines in over 96% of the study areas.

At the end of 1996, 1,121 study areas were able to offer equal access to all of their customers, an increase of 132 study areas from the end of 1995. The number of study areas with no equal access lines at the end of 1996 was 169, as compared to 302 at the end of 1995. At the end of 1996, 144 study areas had a mixture of equal access and non-equal access lines.

---

[4] The estimate for the number of long distance carriers serving a state equals the number of long distance carriers from the local study area with the maximum number of long distance carriers in that state.

GTE and the United Telephone System together provide almost one-half of the non-equal access lines remaining in the country. GTE had 327,000 non-equal access lines and the United Telephone System had 122,000 non-equal access lines at the end of 1996. GTE operating companies in Ohio, Illinois, Michigan and Texas each had over 40,000 presubscribed lines that have not been converted to equal access.

For those companies with 100% conversion in 1996, the company with the most presubscribed lines was Pacific Bell with 15,156,776; the company with the least lines was West Side Telephone Company of Pennsylvania with 35 lines. For companies with no equal access lines in 1996, the company with the most lines was Highland Telephone Cooperative in Tennessee with 20,914 presubscribed lines; the company with the least lines was Circle Utilities in Alaska with 24 presubscribed lines.

Tables 6.1 through 6.7 provide state-by-state summaries for earlier periods in the same format that Table 2 contained data for 1996. Table 6.1 shows that at the end of 1989, 86.2% of the presubscribed lines in the United States had been converted to equal access with only one state, Delaware, and the District of Columbia having 100% conversion. In comparison, Table 2 shows that by December 31, 1996, 99.4% of the presubscribed lines in the United States had been converted to equal access with six states and the District of Columbia having 100% conversion.

Technical Notes and Data Sources

The equal access requirements imposed on the BOCs are contained in United States v. American Tel. & Tel. Co. 552 F. Supp. 131 (D.D.C. 1982). GTE's obligation to provide equal access is contained in United States v. GTE Corporation, Civil Action No. 83-1298, 1985-1 Trade Cases ¶ 66,355 (D.D.C. January 11, 1985).

The equal access requirements for non-Bell companies were first imposed by the Commission in MTS and WATS Market Structure Phase III, CC Docket No. 78-72, 100 FCC 2d 860 (1985). A series of later decisions pertained to various other aspects of the issue. Puerto Rico Telephone Company Equal Access Conversion Schedule, 5 FCC Rcd 5830 (1990), contains cites to prior decisions.

Until recently, information on the number of presubscribed lines served by each long distance carrier was necessary in connection with the universal service program. Following passage of the Telecommunications Act of 1996, in accordance with the specific mandate set forth in the Act, the FCC changed its rules on universal service. As a result, information for December 1996 is the last presubscribed line data NECA plans to collect.

The data collected by NECA contains information on whether presubscribed lines provide equal access. NECA's data base of presubscribed lines is the source of all data shown in Tables 2, 3, 4, 5 and 6.1 through 6.7.

Other sources of historical data are also available, but the sources are not always consistent or available for all companies. Data for earlier years is available from tariff review plans, projections

filed in the Rate of Return Represcription proceeding, CC Docket 89-624, and infrastructure reports filed as part of the Commission's Automated Reporting Management Information System (ARMIS). The trends shown in Table 1 have been pieced together from differing sources. The historical record shown in Table 1 reflects our best judgment using the various sources available and is generally consistent with previously published estimates. [See, Telephone Lines Converted to Equal Access, mimeo no. 3563, released June 13, 1990.]

There are two differences between presubscribed lines and market share data in this report and those reported in Long Distance Market Shares, Second Quarter 1997. First, AT&T's market share in this report does not include lines presubscribed to Alascom. Second, lines presubscribed to Sprint in this report also include lines that are presubscribed to United Telephone Long Distance. As noted previously, lines identified as "toll restricted" and "no-PIC" are not included in the count of presubscribed lines; neither are special access lines, WATS lines, and other specialized lines.

This report is available in the Common Carrier Public Reference Room. Copies may be purchased by calling International Transcription Services, Inc. (ITS) at (202) 857-3800. The report can also be downloaded [file name EQACC-97.ZIP] from the FCC-State Link internet site at http://www.fcc.gov/ccb/stats on the World Wide Web. The report can also be obtained from the FCC -State Link computer bulletin board at (202)418-0241.

TABLE 1
TELEPHONE LINES CONVERTED TO EQUAL ACCESS
(PRESUBSCRIBED ACCESS LINES IN THOUSANDS)

		BELL COMPANIES		OTHER COMPANIES		TOTAL	
		LINES	% EQUAL ACCESS	LINES	% EQUAL ACCESS	LINES	% EQUAL ACCESS
1984	JUNE	84,321	0.00	26,278	0.00	110,599	0.0
	DECEMBER	85,457	3.80	26,633	1.00	112,090	3.1
1985	JUNE	86,609	26.90	26,992	2.48	113,601	21.1
	DECEMBER	87,777	50.90	27,355	3.45	115,132	39.6
1986	JUNE	88,960	61.90	27,724	13.64	116,684	50.4
	DECEMBER	90,159	74.30	28,098	27.99	118,257	63.3
1987	JUNE	91,374	77.70	28,477	37.68	119,851	68.2
	DECEMBER	92,606	84.70	28,860	47.77	121,467	75.9
1988	JUNE	93,520	87.40	29,145	51.58	122,665	78.9
	DECEMBER	94,813	91.30	29,548	56.32	124,361	83.0
1989	JUNE	96,632	93.40	30,115	59.59	126,747	85.4
	DECEMBER	98,214	94.06	30,268	60.75	128,482	86.2
1990	JUNE	99,815	94.96	30,962	63.77	130,777	87.6
	DECEMBER	100,993	96.81	31,416	70.63	132,409	90.6
1991	JUNE	102,027	97.43	31,870	73.45	133,896	91.7
	DECEMBER	103,102	98.41	32,185	77.52	135,287	93.4
1992	JUNE	104,060	98.85	32,643	80.67	136,704	94.5
	DECEMBER	105,744	99.31	32,981	84.50	138,725	95.8
1993	JUNE	107,084	99.38	33,531	86.64	140,615	96.3
	DECEMBER	108,847	99.63	33,963	89.12	142,809	97.1
1994	JUNE	110,583	99.80	34,646	90.60	145,229	97.6
	DECEMBER	113,092	99.87	35,387	92.20	148,479	98.0
1995	JUNE	114,827	99.90	35,518	94.40	150,335	98.6
	DECEMBER	116,344	99.90	36,258	95.70	152,602	98.9
1996	JUNE	119,119	100.00	36,883	96.80	156,002	99.2
	DECEMBER	120,910	100.00	37,763	97.60	158,672	99.4

TABLE 2

PRESUBSCRIBED TELEPHONE LINES BY STATE AS OF DECEMBER 31, 1996

STATE	NUMBER OF TELEPHONE COMPANIES		BELL COMPANY LINES		OTHER COMPANY LINES		MARKET SHARES				TOTAL LINES
	LOCAL	LONG DISTANCE*	EQUAL ACCESS	NON-EQUAL ACCESS	EQUAL ACCESS	NON-EQUAL ACCESS	AT&T	MCI	SPRINT	OTHER CARRIERS	
ALABAMA	30	68	1,804,922	0	416,009	12,431	67.1%	13.0%	4.0%	15.9%	2,233,362
ALASKA	25	2	0	0	308,979	46,206	0.0%	0.0%	0.0%	100.0%	355,185
ARIZONA	14	95	2,255,788	711	155,215	2,898	59.8%	14.4%	8.9%	16.8%	2,414,612
ARKANSAS	28	64	887,446	0	381,685	19,326	67.2%	11.4%	5.5%	15.9%	1,288,457
CALIFORNIA	22	100	15,825,276	0	3,948,898	31,136	61.7%	16.4%	9.0%	12.9%	19,805,310
COLORADO	27	96	2,276,307	1,831	92,300	10,744	56.1%	17.0%	8.9%	18.0%	2,381,182
CONNECTICUT	2	65	0	0	2,035,573	0	38.8%	11.3%	5.3%	44.6%	2,035,573
DELAWARE	1	70	466,474	0	0	0	66.4%	16.5%	6.3%	10.8%	466,474
DISTRICT OF COLUMBIA	1	24	771,630	0	0	0	67.9%	17.7%	6.8%	7.6%	771,630
FLORIDA	13	154	5,663,040	0	3,865,704	42,758	66.2%	12.2%	8.0%	13.6%	9,571,502
GEORGIA	36	108	3,572,631	0	671,366	31,411	64.3%	14.4%	8.4%	12.9%	4,275,408
HAWAII	1	31	0	0	586,974	28,314	56.5%	13.9%	18.5%	11.1%	615,288
IDAHO	21	56	449,625	0	160,233	2,897	58.5%	13.2%	6.2%	22.1%	612,755
ILLINOIS	56	108	6,233,999	0	1,153,220	55,376	66.4%	13.6%	7.4%	12.6%	7,442,595
INDIANA	42	83	1,953,053	0	1,145,476	23,638	67.9%	13.0%	6.5%	12.6%	3,122,167
IOWA	153	67	989,362	0	495,012	10,894	61.8%	16.5%	5.3%	16.3%	1,495,268
KANSAS	39	72	1,244,898	0	199,374	42,034	61.9%	13.0%	10.9%	14.2%	1,486,306
KENTUCKY	19	81	1,113,544	0	776,373	7,665	67.2%	12.6%	4.3%	15.9%	1,897,582
LOUISIANA	20	97	2,102,325	0	151,262	12,216	63.2%	13.3%	4.4%	19.1%	2,265,803
MAINE	19	61	633,594	0	116,874	4,410	71.3%	11.6%	6.6%	10.5%	754,878
MARYLAND	2	30	3,046,238	0	5,829	0	64.6%	18.8%	7.4%	9.2%	3,052,067
MASSACHUSETTS	3	91	4,148,019	0	3,795	0	70.5%	13.0%	8.7%	7.8%	4,151,814
MICHIGAN	38	88	4,843,416	0	809,673	49,964	62.7%	14.5%	6.2%	16.6%	5,703,053
MINNESOTA	89	78	2,055,017	0	659,497	15,072	58.5%	19.8%	5.8%	15.9%	2,729,586
MISSISSIPPI	19	66	1,166,783	0	52,683	25,281	66.9%	14.0%	3.7%	15.5%	1,244,747
MISSOURI	44	90	2,325,764	0	674,867	63,551	62.5%	12.9%	10.6%	13.9%	3,064,182
MONTANA	18	51	334,537	0	135,820	11,341	64.0%	11.6%	6.2%	18.2%	481,698
NEBRASKA	42	57	501,392	0	404,197	22,334	59.2%	14.1%	6.4%	20.3%	927,923
NEVADA	14	52	294,577	0	776,083	3,444	58.6%	13.3%	14.8%	13.3%	1,074,104
NEW HAMPSHIRE	12	65	707,034	0	42,870	2,859	71.1%	11.3%	8.2%	9.4%	752,763
NEW JERSEY	3	113	5,587,098	0	189,400	0	71.2%	14.3%	5.1%	9.3%	5,776,498
NEW MEXICO	15	66	693,849	0	108,617	11,700	59.8%	16.1%	7.6%	16.5%	814,166
NEW YORK	44	128	10,373,195	0	1,180,966	8,218	64.3%	14.2%	9.0%	12.5%	11,562,379
NORTH CAROLINA	26	73	2,066,889	0	2,086,598	13,129	63.8%	11.5%	10.2%	14.5%	4,166,616
NORTH DAKOTA	24	49	207,695	0	123,591	22,958	59.4%	16.3%	4.4%	19.9%	354,244
OHIO	42	75	3,733,502	0	2,413,246	80,892	63.1%	14.0%	7.3%	15.6%	6,227,640
OKLAHOMA	39	88	1,503,575	7,320	298,718	13,212	63.0%	12.4%	6.5%	18.2%	1,822,825
OREGON	33	77	1,230,646	0	611,272	5,396	64.0%	11.3%	9.0%	15.7%	1,847,314
PENNSYLVANIA	37	112	5,500,537	0	1,594,339	24,793	66.1%	14.3%	6.4%	13.3%	7,119,669
RHODE ISLAND	1	63	602,318	0	0	0	72.1%	12.0%	7.5%	8.5%	602,318
SOUTH CAROLINA	27	63	1,309,243	0	651,840	922	60.3%	14.9%	5.3%	19.4%	1,962,005
SOUTH DAKOTA	32	50	257,672	0	122,661	4,748	61.0%	15.0%	4.6%	19.4%	385,081
TENNESSEE	25	106	2,465,023	0	570,920	35,869	67.3%	13.3%	6.3%	13.1%	3,071,812
TEXAS	57	159	8,376,840	0	2,242,582	59,016	58.5%	15.8%	7.7%	17.9%	10,678,438
UTAH	13	68	941,891	0	35,588	7,115	58.1%	14.6%	7.4%	19.8%	984,594
VERMONT	10	51	307,533	0	52,649	5,290	67.7%	12.5%	7.1%	12.7%	365,472
VIRGINIA	21	58	2,839,412	0	921,353	4,608	61.9%	20.6%	8.3%	9.2%	3,765,373
WASHINGTON	22	86	2,258,674	0	1,002,466	9,059	59.8%	13.8%	10.1%	16.4%	3,270,199
WEST VIRGINIA	10	32	703,559	0	140,265	2,516	69.7%	15.5%	4.7%	10.2%	846,340
WISCONSIN	89	79	2,047,863	0	1,004,961	4,945	64.2%	14.7%	5.7%	15.5%	3,057,769
WYOMING	10	45	226,095	0	34,883	13,331	66.9%	12.7%	6.1%	14.3%	274,309
UNITED STATES	1,430 **		120,899,800	9,862	35,612,756	905,917	63.3%	14.5%	7.6%	14.6%	157,428,335
NORTHERN MARIANA IS	1	3	0	0	20,976	0	0.0%	71.3%	0.0%	28.7%	20,976
PUERTO RICO	2	9	0	0	1,166,721	0	41.1%	10.6%	4.0%	44.4%	1,166,721
VIRGIN ISLANDS	1	5	0	0	56211	0	70.8%	0.0%	10.3%	18.9%	56,211
GRAND TOTAL	1,434 **	621	120,899,800	9,862	36,856,664	905,917	63.1%	14.5%	7.6%	14.8%	158,672,243

Source: National Exchange Carrier Association PSL Database

*The estimate for the number of long distance carriers serving a state equals the number of long distance carriers from the local study area with the maximum number of long distance carriers.

**This total number of operating companies overstates the actual number of operating companies because many operating companies serve more than one state. There are about 1,300 separate operating companies.

TABLE 3

AVERAGE NUMBER OF LONG DISTANCE CARRIERS PER STUDY AREA BY SIZE OF STUDY AREA AS OF DECEMBER 31, 1996

LINES IN STUDY AREA*	NUMBER OF STUDY AREAS**	AVERAGE NUMBER OF LINES PER STUDY AREA	AVERAGE NUMBER OF LDC PER STUDY AREA***
0-249	18	178	5.9
250-499	62	375	7.9
500-999	150	727	8.7
1,000-2,499	289	1,643	9.7
2,500-4999	193	3,641	10.9
5,000-9,999	159	6,993	12.2
10,000-24,999	116	15,028	14.9
25,000-49,999	35	33,043	17.3
50,000-99,999	28	67,710	24.9
100,000-249,999	18	172,659	33.9
250,000-499,999	10	329,769	47.7
500,000-999,999	13	722,701	52.8
1,000,000-2,499,999	17	1,717,263	72.5
>2,500,000	13	6,134,093	99.5
AVERAGE	1,121	117,714	14.3

Source: National Exchange Carrier Association PSL Database

* Lines measured by presubscribed lines.

** The sample only includes study areas that have entirely converted to equal access.

***LDC is an abbreviation for long distance carriers.

TABLE 4

MARKET SHARES OF LONG DISTANCE CARRIERS BY SIZE OF STUDY AREA AS OF DECEMBER 31, 1996

LINES IN STUDY AREA*	NUMBER OF STUDY AREAS**	AT&T	MCI	SPRINT	OTHER CARRIER
0-249	18	68.8%	10.9%	4.3%	16.0%
250-499	62	68.4%	12.2%	5.3%	14.2%
500-999	150	66.8%	10.8%	4.8%	17.6%
1,000-2,499	289	69.9%	10.9%	4.2%	15.0%
2,500-4999	193	68.7%	11.1%	4.1%	16.2%
5,000-9,999	159	67.1%	10.9%	4.0%	18.1%
10,000-24,999	116	62.2%	11.7%	4.3%	21.9%
25,000-49,999	35	55.8%	11.4%	4.1%	28.7%
50,000-99,999	28	54.6%	10.2%	5.8%	29.4%
100,000-249,999	18	58.8%	11.6%	6.4%	23.1%
250,000-499,999	10	61.9%	12.9%	9.0%	16.2%
500,000-999,999	13	63.6%	14.6%	7.4%	14.4%
1,000,000-2,499,999	17	61.0%	14.1%	7.0%	17.8%
>2,500,000	13	64.6%	15.5%	7.7%	12.2%
NATIONAL AVERAGE	1,121	63.1%	14.5%	7.6%	14.8%

Source: National Exchange Carrier Association PSL Database

* Lines measured by presubscribed lines.

** The sample only includes study areas that have entirely converted to equal access.

PUBLIC VERSION

Table 5: NUMBER OF LONG DISTANCE CARRIERS, LONG DISTANCE CARRIER'S PRESUBSCRIBED LINES AND EQUAL ACCESS LINES BY LOCAL EXCHANGE CARRIERS (AS OF DECEMBER 31, 1996)

STATE	NAME	NUMBER OF LDC*	PRESUBSCRIBED LINES AT&T	MCI	SPRINT	WORLDCOM	EXCEL	OTHER CARRIERS	TOTAL	EQUAL ACCESS	NOT EQUAL ACCESS	OTHER LINES TOLL RESTRICTED/ NO-PIC	ACCESS LINES TOTAL
ALABAMA	SOUTH CENTRAL BELL-AL	68	1,208,169	251,071	75,272	64,998	67,574	137,838	1,804,922	1,804,922	0	95,504	1,900,426
	GTE SOUTH INC. - ALABAMA	37	86,924	13,044	6,701	6,578	7,584	13,386	134,217	134,166	51	7,856	142,073
	CONTEL SOUTH-AL DBA GTE SYSTEMS OF SOUTH	37	75,419	9,779	2,526	3,027	3,660	9,236	103,657	103,656	11	2,462	106,129
	GULF TELEPHONE COMPANY - ALABAMA	17	18,254	3,768	1,442	1,044	1,990	11,271	37,769	37,769	0	5,994	43,763
	ALLTEL ALABAMA	24	16,553	1,799	565	440	728	2,370	22,455	22,455	0	1,218	23,673
	FARMERS TEL COOP INC - ALABAMA	12	12,297	1,972	370	266	1,948	236	17,089	17,089	0	87	17,176
	PEOPLES TELEPHONE COMPANY	10	11,775	989	275	123	623	162	13,947	13,947	0	63	14,010
	FRONTIER COMMUNICATIONS OF ALABAMA, INC.	14	6,020	1,384	205	806	366	3,396	12,267	12,267	0	375	12,642
	BRINDLEE MOUNTAIN TEL. COMPANY	8	6,647	1,204	321	62	914	2,423	11,571	11,571	0	310	11,881
	FRONTIER COMMUNICATIONS OF THE SOUTH	14	4,002	1,017	197	2,754	347	2,507	10,824	10,824	0	79	10,903
	ONEONTA TEL. COMPANY INC.	9	4,299	641	316	70	244	1,157	6,927	6,927	0	135	7,062
	MILLRY TELEPHONE CO. INC	10	4,053	448	106	84	237	219	6,047	6,047	0	41	6,088
	NEW HOPE TEL. COOP., INC.-AL	8	4,301	380	105	52	459	78	5,375	5,375	0	108	5,483
	ROANOKE TEL. CO., INC.	1	4,876	0	0	0	0	0	4,876	0	4,876	0	4,876
	BUTLER TELEPHONE CO. INC.	9	3,957	316	64	40	121	138	4,636	4,636	0	22	4,658
	UNION SPRINGS TEL. COMPANY	9	3,449	283	61	97	136	298	4,324	4,324	0	147	4,471
	GRACEBA TOTAL COMMUNICATIONS	9	3,522	242	159	34	314	67	4,338	4,338	0	14	4,352
	BLOUNTSVILLE TEL. COMPANY INC	9	3,064	228	63	19	76	94	3,544	3,544	0	57	3,601
	HOPPER TEL. COMPANY INC.	11	2,590	209	107	31	317	189	3,443	3,443	0	78	3,521
	MON-CRE TEL. COOP. INC.	8	2,462	170	58	17	92	55	2,854	2,854	0	107	2,961
	PINE BELT TELEPHONE COMPANY	8	1,852	290	54	20	90	140	2,446	2,446	0	130	2,576
	OAKMAN TEL. COMPANY INC.	8	2,277	116	35	12	41	7	2,488	2,488	0	16	2,504
	GROVE HILL TEL. CORP.	11	1,841	212	58	47	74	119	2,351	2,351	0	4	2,355
	HAYNEVILLE TEL. COMPANY INC.	8	1,499	178	103	37	61	134	2,012	522	1,490	229	2,241
	NATIONAL TEL. CO. OF AL	1	2,222	0	0	0	0	0	2,222	0	2,222	0	2,222
	FRONTIER COMMUNICATIONS OF LAMAR COUNTY	10	1,154	162	59	38	60	661	2,134	2,134	0	57	2,191
	MOUNDVILLE TELEPHONE COMPANY	1	1,659	0	0	0	0	0	1,659	0	1,659	0	1,659
	RAGLAND TEL. CO.	1	1,262	0	0	0	0	0	1,262	0	1,262	0	1,262
	CASTLEBERRY TEL. COMPANY INC.	1	860	0	0	0	0	0	860	0	860	0	860
	GOSHEN TELEPHONE COMPANY	7	689	52	15	10	58	12	836	836	0	0	836
SUBTOTAL			1,498,848	290,154	89,327	80,706	88,134	186,193	2,233,362	2,220,931	12,431	115,093	2,348,455
ALASKA	ANCHORAGE TELEPHONE UTILITY	2	0	0	0	0	0	145,020	145,020	145,020	0	6,904	151,924
	GLACIER STATE TELEPHONE COMPANY	2	0	0	0	0	0	42,300	42,300	40,240	2,060	1,572	43,872
	MATANUSKA TELEPHONE ASSOC., INC.	2	0	0	0	0	0	41,096	41,096	39,395	1,701	1,028	42,124
	FAIRBANKS MUNICIPAL UTILITIES SYSTEM	2	0	0	0	0	0	31,560	31,560	31,560	0	2,603	34,163
	JUNEAU & DOUGLAS TELEPHONE COMPANY	2	0	0	0	0	0	21,351	21,351	21,351	0	1,114	22,465
	GTE ALASKA INCORPORATED	2	0	0	0	0	0	17,628	17,628	2,617	15,011	0	17,628
	SITKA TELEPHONE COMPANY	2	0	0	0	0	0	11,842	11,842	5,255	6,587	338	12,180
	KETCHIKAN PUBLIC UTILITIES	2	0	0	0	0	0	9,299	9,299	9,299	0	743	10,042
	UNITED UTILITIES INC.	1	0	0	0	0	0	5,176	5,176	0	5,176	0	5,176
	COPPER VALLEY TEL. COOP. INC.	2	0	0	0	0	0	4,578	4,578	4,429	149	582	5,160
	TELEPHONE UTILITIES OF ALASKA	2	0	0	0	0	0	5,013	5,013	5,013	0	113	5,126
	INTERIOR TELEPHONE COMPANY INC.	2	0	0	0	0	0	4,200	4,200	2,125	2,075	144	4,344
	ALASKA TELEPHONE COMPANY	1	0	0	0	0	0	3,423	3,423	0	3,423	0	3,423
	OTZ TELEPHONE COOPERATIVE, INC.	1	0	0	0	0	0	2,659	2,659	0	2,659	0	2,659
	ARCTIC SLOPE TEL. ASSOCIATION COOP.INC.	2	0	0	0	0	0	2,076	2,076	867	1,209	91	2,167
	NUSHAGAK TELEPHONE COOPERATIVE, INC.	1	0	0	0	0	0	1,972	1,972	0	1,972	0	1,972
	CORDOVA TELEPHONE COOPERATIVE, INC.	2	0	0	0	0	0	1,808	1,808	1,808	0	116	1,924
	BRISTOL BAY TELEPHONE COOP. INC.	1	0	0	0	0	0	1,744	1,744	0	1,744	0	1,744
	MUKLUK TEL. COMPANY, INC	1	0	0	0	0	0	1,013	1,013	0	1,013	0	1,013
	BUSH-TELL INC.	1	0	0	0	0	0	678	678	0	678	0	678
	YUKON TELEPHONE COMPANY, INC.	1	0	0	0	0	0	367	367	0	367	0	367
	NORTH COUNTRY TELEPHONE COMPANY	1	0	0	0	0	0	164	164	0	164	0	164
	SUMMIT TEL & TEL CO OF ALASKA	0	0	0	0	0	0	115	115	0	115	0	115
	BETTLES TELEPHONE CO. INC	1	0	0	0	0	0	79	79	0	79	0	79
	CIRCLE UTILITIES	1	0	0	0	0	0	24	24	0	24	0	24
SUBTOTAL			0	0	0	0	0	355,185	355,185	308,979	46,206	15,348	370,533
ARIZONA	MOUNTAIN BELL-ARIZONA	95	1,355,194	335,003	205,078	108,122	58,824	194,278	2,256,499	2,255,788	711	237,384	2,493,883
	CITIZENS UTILITIES RURAL COMPANY INC.	27	39,418	6,753	3,831	1,752	3,604	24,378	79,736	79,736	0	952	80,688
	CITIZENS UTILITIES CO. DBA CITIZENS-ARIZ	37	18,209	2,621	1,075	820	949	9,495	33,169	33,169	0	48	33,217
	NAVAJO COMMUNICATIONS CO INC-AZ	10	7,485	1,012	3,523	100	240	481	12,841	12,841	0	1,567	14,408
	CONTEL OF CALIFORNIA - ARIZONA	14	5,420	627	369	163	196	319	7,114	7,083	31	146	7,260
	VALLEY TELEPHONE COOPERATIVE INC-AZ	20	5,133	732	368	97	315	426	7,071	7,071	0	0	7,071

PUBLIC VERSION

Table 5: NUMBER OF LONG DISTANCE CARRIERS, LONG DISTANCE CARRIER'S PRESUBSCRIBED LINES AND EQUAL ACCESS LINES BY LOCAL EXCHANGE CARRIERS (AS OF DECEMBER 31, 1996)

ARIZONA CONT'D	TABLE TOP TELEPHONE COMPANY, INC.	27	3,081	291	228	204	100	221	4,125	4,125	0	185	4,310
	SOUTHWESTERN TEL. CO.	10	3,377	174	248	51	176	50	4,076	4,076	0	75	4,151
	ARIZONA TEL. CO.	11	2,744	123	133	141	63	48	3,252	2,378	874	0	3,252
	GILA RIVER TELECOMMUNICATIONS, INC.	10	1,788	189	228	131	0	56	2,392	2,392	0	68	2,460
	TOHONO O'ODHAM UTILITY AUTHORITY	1	1,993	0	0	0	0	0	1,993	0	1,993	0	1,993
	UNIVERSAL TEL CO OF SOUTHWEST - AZ	9	431	113	104	0	0	818	1,466	1,466	0	20	1,486
	MIDVALE TELEPHONE EXCHANGE, INC.-ARIZONA	10	358	38	30	5	36	26	493	493	0	5	498
	FORT MOJAVE TELECOMMUNICATIONS, INC.	7	284	48	12	20	7	14	385	385	0	10	395
SUBTOTAL			1,444,915	347,724	215,227	111,626	64,510	230,610	2,414,612	2,411,003	3,609	240,460	2,655,072
ARKANSAS	SOUTHWESTERN BELL-ARKANSAS	64	585,571	113,985	58,004	43,428	40,234	46,244	887,446	887,446	0	25,909	913,355
	ALLTEL ARKANSAS, INC.	29	63,636	7,554	2,643	2,974	5,091	11,971	94,069	91,493	2,576	3,017	97,086
	CONTEL OF AR, INC. DBA GTE ARKANSAS	31	65,883	8,113	2,845	2,775	5,451	9,125	94,192	93,080	1,112	1,436	95,628
	GTE SOUTHWEST INC. - ARKANSAS	32	53,724	7,443	2,954	2,328	3,649	7,804	77,902	77,803	99	2,129	80,031
	CENTURY TELEPHONE OF MOUNTAIN HOME, INC.	17	10,226	1,457	661	511	1,051	5,761	19,666	19,666	0	378	20,044
	CONTEL KS DBA GTE SYSTEMS OF ARKANSAS	22	14,878	1,429	569	520	739	1,364	19,499	19,041	458	440	19,939
	CENTURY TELEPHONE OF ARKANSAS, INC.	13	9,612	1,080	316	242	647	4,891	16,788	12,320	4,468	384	17,172
	PRAIRIE GROVE TELEPHONE COMPANY	8	6,563	626	203	162	660	33	8,247	8,247	0	142	8,389
	ARKANSAS TELEPHONE COMPANY	13	5,681	640	264	177	240	124	7,135	7,135	0	466	7,601
	NORTHERN ARKANSAS TEL. CO.,INC.	10	5,112	840	652	239	447	92	7,382	7,382	0	79	7,461
	MOUNTAIN VIEW TELEPHONE COMPANY	13	4,634	674	217	158	338	60	6,081	6,081	0	0	6,081
	TRI-COUNTY TEL. CO. INC.-AR	11	2,661	608	267	139	412	1,864	5,951	5,951	0	128	6,079
	SOUTHWEST ARKANSAS TEL. COOP. INC.	10	4,505	334	79	42	260	72	5,292	5,292	0	282	5,574
	YELL COUNTY TELEPHONE COMPANY	9	4,367	327	198	60	150	90	5,192	5,192	0	0	5,192
	WALNUT HILL TELEPHONE COMPANY	1	4,936	0	0	0	0	0	4,936	0	4,936	0	4,936
	E. RITTER TELEPHONE COMPANY	9	3,603	460	127	97	181	53	4,521	4,521	0	154	4,675
	SOUTH ARKANSAS TEL. CO.,INC.	1	3,643	0	0	0	0	0	3,643	0	3,643	0	3,643
	YELCOT TEL. CO.,INC.	11	2,467	384	131	97	212	58	3,349	3,349	0	100	3,449
	MADISON COUNTY TEL. CO. INC.	7	2,722	245	104	60	106	41	3,278	3,278	0	49	3,327
	CLEVELAND CTY TEL. CO.	8	2,815	214	25	28	106	36	3,224	3,224	0	9	3,233
	CENTRAL ARKANSAS TEL. COOP INC.	8	2,299	200	45	47	134	39	2,764	2,764	0	0	2,764
	CENTURY TELEPHONE OF REDFIELD, INC.	9	1,177	129	53	22	99	272	1,752	1,752	0	55	1,807
	LAVACA TELEPHONE-AR	9	1,067	117	58	22	282	11	1,557	1,557	0	26	1,583
	CENTURY TELEPHONE OF SOUTH ARKANSAS, INC	9	937	80	19	7	26	201	1,270	1,270	0	22	1,292
	DECATUR TELEPHONE CO INC- ARKANSAS	7	1,083	54	28	4	113	5	1,287	1,287	0	0	1,287
	RICE BELT TEL. CO.,INC.	1	1,025	0	0	0	0	0	1,025	0	1,025	0	1,025
	MAGAZINE TELEPHONE COMPANY	1	893	0	0	0	0	0	893	0	893	0	893
	SCOTT COUNTY TELEPHONE COMPANY	1	116	0	0	0	0	0	116	0	116	0	116
SUBTOTAL			866,035	146,952	70,462	54,139	60,628	90,211	1,288,457	1,269,131	19,326	35,205	1,323,662
CALIFORNIA	PACIFIC BELL	100	9,835,012	2,604,909	1,440,760	430,230	358,790	1,155,545	15,825,276	15,825,276	0	422,924	16,248,200
	GENERAL TEL CO OF CALIFORNIA	83	1,973,597	571,906	297,253	76,908	84,451	352,351	3,356,466	3,331,224	25,242	205,210	3,561,676
	CONTEL OF CALIFORNIA - CALIFORNIA	40	231,041	35,774	18,790	6,662	9,618	15,946	317,831	316,384	1,447	8,128	325,959
	ROSEVILLE TELEPHONE COMPANY	24	70,814	14,990	8,168	1,620	4,152	5,056	104,800	104,800	0	3,336	108,136
	CITIZENS UTILITIES CO. OF CALIF.	31	42,686	14,080	5,250	1,356	4,016	30,306	97,694	97,694	0	356	98,050
	SIERRA TELEPHONE COMPANY, INC.	15	12,459	2,401	1,001	630	1,155	1,356	19,002	19,002	0	487	19,489
	CITIZENS TELECOMMUNICATIONS OF GOLDEN STATE	12	9,302	1,832	588	204	583	1,726	14,235	14,235	0	380	14,615
	WEST COAST TEL. CO. OF CALIFORNIA	15	9,492	1,220	692	133	183	537	12,257	12,017	240	431	12,688
	EVANS TELEPHONE COMPANY	15	7,725	1,141	454	502	187	226	10,235	10,235	0	436	10,671
	THE VOLCANO TELEPHONE COMPANY	14	7,807	778	379	106	291	239	9,600	9,600	0	729	10,329
	THE PONDEROSA TELEPHONE COMPANY	17	5,674	1,001	332	159	617	454	8,237	8,237	0	0	8,237
	CITIZENS TELECOMMUNICATIONS CO. OF TUOLUMNE	10	3,568	701	322	122	478	367	5,558	5,558	0	51	5,609
	KERMAN TELEPHONE COMPANY	12	4,102	580	254	88	154	160	5,338	5,338	0	176	5,514
	THE SISKIYOU TELEPHONE CO.	9	2,782	585	273	45	571	87	4,343	4,343	0	0	4,343
	HAPPY VALLEY TELEPHONE COMPANY	10	2,233	338	141	13	338	39	3,102	3,102	0	0	3,102
	CALAVERAS TELEPHONE COMPANY	9	2,174	325	149	40	144	44	2,876	2,876	0	80	2,956
	CALIFORNIA-OREGON TELEPHONE CO	10	2,064	263	129	24	69	24	2,573	2,573	0	0	2,573
	FORESTHILL TELEPHONE COMPANY	1	2,547	0	0	0	0	0	2,547	0	2,547	0	2,547
	WINTERHAVEN TELEPHONE COMPANY	7	1,468	123	55	7	20	7	1,680	1,680	0	0	1,680
	DUCOR TELEPHONE COMPANY	1	866	0	0	0	0	0	866	0	866	0	866
	HORNITOS TELEPHONE COMPANY	1	582	0	0	0	0	0	582	0	582	0	582
	PINNACLES TELEPHONE COMPANY	1	212	0	0	0	0	0	212	0	212	0	212
SUBTOTAL			12,228,207	3,252,947	1,775,020	518,649	465,817	1,564,470	19,805,310	19,774,174	31,136	642,724	20,448,034
COLORADO	MOUNTAIN BELL-COLORADO	96	1,259,573	392,781	207,609	97,542	70,865	246,675	2,275,045	2,273,214	1,831	220,490	2,495,535

PUBLIC VERSION

Table 5: NUMBER OF LONG DISTANCE CARRIERS, LONG DISTANCE CARRIER'S PRESUBSCRIBED LINES AND EQUAL ACCESS LINES BY LOCAL EXCHANGE CARRIERS (AS OF DECEMBER 31, 1996)

COLORADO CONT'D	EAGLE TELECOMMUNICATIONS INC.	40	45,930	8,766	3,115	2,184	2,489	3,894	66,378	66,378	0	2,346	68,724
	DELTA COUNTY TELE-COMM INC.	15	5,992	805	402	175	707	283	8,364	8,364	0	187	8,551
	UNIVERSAL TEL. CO. OF COLORADO	17	3,191	729	329	173	246	2,150	6,818	6,818	0	296	7,114
	EASTERN SLOPE RURAL TEL ASSN INC	1	4,444	0	0	0	0	0	4,444	0	4,444	0	4,444
	EL PASO COUNTY MUTUAL TEL CO	14	2,056	510	230	79	153	65	3,093	3,093	0	38	3,131
	PHILLIPS COUNTY TEL. CO.	1	1,928	0	0	0	0	0	1,928	0	1,928	0	1,928
	THE RYE TELEPHONE CO. INC.	11	1,229	175	142	27	62	44	1,679	1,505	174	77	1,756
	HAXTUN TELEPHONE COMPANY	9	1,123	228	87	58	79	43	1,618	1,618	0	0	1,618
	PLAINS COOPERATIVE TEL. ASSOC. INC.	8	1,013	258	42	21	108	32	1,474	1,474	0	17	1,491
	WIGGINS TEL. ASSOC.	8	1,146	149	45	12	53	28	1,433	1,433	0	27	1,460
	NUCLA-NATURITA TEL. CO.	1	1,418	0	0	0	0	0	1,418	0	1,418	0	1,418
	BUCU TEL COOPERATIVE ASSOC. INC	1	1,096	0	0	0	0	0	1,096	0	1,096	0	1,096
	STRASBURG TEL. CO.	12	814	127	49	28	16	46	1,080	1,080	0	0	1,080
	COLUMBINE TELEPHONE COMPANY	12	626	164	113	31	28	76	1,038	1,038	0	29	1,067
	BLANCA TELEPHONE CO.	10	674	87	53	23	10	10	857	857	0	42	899
	BIG SANDY TELECOM. INC.	11	586	130	60	19	43	21	859	859	0	28	887
	PINE DRIVE TEL. CO.	7	422	75	40	6	23	104	670	670	0	0	670
	FARMERS TEL CO. INC. - COLORADO	1	369	0	0	0	0	0	369	0	369	0	369
	NUNN TEL. COMPANY	1	359	0	0	0	0	0	359	0	359	0	359
	SUNFLOWER TELEPHONE CO.,INC. - CO	1	326	0	0	0	0	0	326	0	326	0	326
	ROGGEN TELEPHONE COOPERATIVE CO.	1	238	0	0	0	0	0	238	0	238	0	238
	PEETZ COOP. TEL. CO.	7	166	24	2	4	8	2	206	206	0	5	211
	RICO TEL. CO.	1	144	0	0	0	0	0	144	0	144	0	144
	AGATE TELEPHONE CO.	1	114	0	0	0	0	0	114	0	114	0	114
	STONEHAM COOPERATIVE TEL. CO.	1	75	0	0	0	0	0	75	0	75	0	75
	WILLARD TEL. CO.	1	59	0	0	0	0	0	59	0	59	0	59
SUBTOTAL			1,335,111	405,008	212,318	100,382	74,890	253,473	2,381,182	2,368,607	12,575	223,582	2,604,764
CONNECTICUT	SOUTHERN NEW ENGLAND TEL.	65	775,494	227,335	106,158	37,035	15,562	853,805	2,015,389	2,015,389	0	97,665	2,113,054
	THE WOODBURY TEL. CO.	15	14,208	3,118	1,284	251	205	1,118	20,184	20,184	0	370	20,554
SUBTOTAL			789,702	230,453	107,442	37,286	15,767	854,923	2,035,573	2,035,573	0	98,035	2,133,608
DELAWARE	DIAMOND STATE TEL. CO.	70	309,648	77,019	29,328	6,426	5,033	39,020	466,474	466,474	0	39,698	506,172
SUBTOTAL			309,648	77,019	29,328	6,426	5,033	39,020	466,474	466,474	0	39,698	506,172
DIST. OF COLUMBIA	C & P TELEPHONE COMPANY OF WASH D.C.	24	523,890	136,597	52,636	17,532	0	40,975	771,630	771,630	0	115,769	887,399
SUBTOTAL			523,890	136,597	52,636	17,532	0	40,975	771,630	771,630	0	115,769	887,399
FLORIDA	SOUTHERN BELL-FLORIDA	154	3,893,388	748,579	305,492	201,782	139,592	374,207	5,663,040	5,663,040	0	348,646	6,011,686
	GTE FLORIDA INCORPORATED	88	1,252,452	238,976	146,046	64,838	66,888	230,820	2,000,020	1,997,444	2,576	76,634	2,076,654
	UNITED TELEPHONE CO. OF FLORIDA	70	852,585	135,607	254,369	38,475	47,577	69,475	1,398,088	1,357,906	40,182	32,104	1,430,192
	CENTRAL TELEPHONE COMPANY OF FLORIDA	52	228,520	37,163	53,282	9,420	18,344	14,209	360,938	360,938	0	13,729	374,667
	ALLTEL FLORIDA, INC.	37	50,890	5,321	2,257	1,154	3,936	8,735	72,293	72,293	0	2,001	74,294
	ST. JOSEPH TEL. AND TELE. CO.	16	17,986	2,233	1,667	506	1,654	1,728	25,774	25,774	0	2,708	28,482
	VISTA-UNITED TELECOMMUNICATIONS SYSTEMS	16	10,284	516	359	109	37	331	11,636	11,636	0	2,638	14,274
	QUINCY TELEPHONE CO-FL DIV.	13	9,546	1,194	535	101	885	293	12,556	12,556	0	492	13,048
	GULF TEL. CO.- FL	15	5,680	970	509	97	1,069	483	8,808	8,808	0	105	8,913
	NORTHEAST FLORIDA TEL. CO., INC.	15	4,493	1,009	220	120	837	233	6,912	6,912	0	627	7,539
	FLORALA TELEPHONE COMPANY-FLORIDA	9	3,253	346	169	49	437	69	4,323	4,323	0	99	4,422
	FRONTIER COMMUNICATIONS OF THE SOUTH-FL	12	1,899	367	100	559	265	664	3,854	3,854	0	19	3,873
	INDIANTOWN TELEPHONE SYSTEM	13	1,904	198	150	55	62	891	3,260	3,260	0	264	3,524
SUBTOTAL			6,332,882	1,172,479	765,155	317,265	281,583	702,138	9,571,502	9,528,744	42,758	480,066	10,051,568
GEORGIA	SOUTHERN BELL-GEORGIA	108	2,269,727	551,998	318,489	101,663	105,700	225,054	3,572,631	3,572,631	0	203,048	3,775,679
	ALLTEL GEORGIA COMMUNICATIONS CORP.	43	170,457	24,318	16,714	5,334	10,386	31,299	258,508	258,508	0	9,211	267,719
	GEORGIA ALLTEL TELECOM	35	55,172	6,601	3,395	1,306	3,391	8,967	78,833	78,833	0	1,797	80,630
	STANDARD TEL. CO.	14	40,248	3,912	3,282	835	1,840	10,825	60,942	60,942	0	801	61,743
	ALLTEL GEORGIA, INC.	27	36,452	4,821	2,358	799	2,071	6,603	53,104	53,104	0	1,200	54,304
	COASTAL UTILITIES, INC.	11	15,122	3,549	2,096	377	1,381	6,943	30,368	30,368	0	2,491	32,859
	FRONTIER COMMUNICATIONS OF GEORGIA, INC.	16	9,738	1,764	2,914	368	550	6,439	21,773	21,773	0	591	22,364
	CAMDEN TEL & TEL CO INC - GEORGIA	9	12,240	2,073	1,550	296	1,081	1,013	18,253	18,253	0	371	18,624
	INTERSTATE TELEPHONE COMPANY	9	10,006	1,621	295	878	0	1,467	14,267	14,267	0	0	14,267
	PINELAND TELEPHONE COOP	13	9,281	1,269	485	99	402	299	11,835	11,835	0	23	11,858
	RINGGOLD TEL. COMPANY	11	9,321	940	454	165	251	150	11,281	11,281	0	421	11,702
	WILKES TEL. & ELECTRIC CO.	11	3,949	1,100	351	113	460	4,137	10,110	10,110	0	812	10,922

PUBLIC VERSION

Table 5: NUMBER OF LONG DISTANCE CARRIERS, LONG DISTANCE CARRIER'S PRESUBSCRIBED LINES AND EQUAL ACCESS LINES BY LOCAL EXCHANGE CARRIERS (AS OF DECEMBER 31, 1996)

GEORGIA CONT'D	ELLIJAY TEL. CO.	12	8,300	811	449	229	304	89	10,191	10,191	0	359	10,550
	PUBLIC SERVICE TELEPHONE CO.	5	8,030	1,034	375	0	618	56	10,113	10,113	0	0	10,113
	BLUE RIDGE TELEPHONE COMPANY	14	7,785	625	350	113	465	152	9,490	9,490	0	3	9,493
	PLANT TELEPHONE COMPANY	13	7,354	683	299	120	435	103	8,994	8,994	0	260	9,254
	BULLOCH COUNTY RURAL TEL. COOP INC.	12	6,706	710	227	96	356	140	8,235	8,235	0	446	8,681
	HART TELEPHONE COMPANY	1	8,421	0	0	0	0	0	8,421	0	8,421	0	8,421
	PLANTERS RURAL TEL. COOP., INC.	10	5,887	832	200	143	346	139	7,547	7,547	0	116	7,663
	GEORGIA TELEPHONE CORPORATION	8	4,784	996	198	76	404	71	6,529	6,529	0	12	6,541
	ALMA TELEPHONE CO INC	11	4,654	737	160	124	457	120	6,252	6,252	0	197	6,449
	NELSON-BALL GROUND TEL. CO.	15	4,693	651	326	88	149	69	5,976	5,976	0	53	6,029
	CHICKAMAUGA TEL. CORP.	4	3,264	1,282	754	0	0	465	5,765	2,501	3,264	116	5,881
	TRENTON TELEPHONE COMPANY	1	5,501	0	0	0	0	0	5,501	0	5,501	0	5,501
	DARIEN TELEPHONE CO. INC.	10	3,442	847	233	79	309	111	5,021	1,579	3,442	201	5,222
	VALLEY TEL. CO.	8	3,696	588	110	420	0	262	5,076	5,076	0	0	5,076
	BRANTLEY TELEPHONE COMPANY INC.	9	3,309	515	151	17	515	25	4,532	4,532	0	122	4,654
	PROGRESSIVE RURAL TEL. COOP., INC.	9	3,881	258	111	46	225	36	4,557	4,557	0	0	4,557
	HAWKINSVILLE TELEPHONE CO.	1	4,382	0	0	0	0	0	4,382	0	4,382	0	4,382
	CITIZENS TELEPHONE CO INC - GEORGIA	1	4,333	0	0	0	0	0	4,333	0	4,333	0	4,333
	WILKINSON COUNTY TEL. CO., INC.	7	2,887	855	151	23	202	23	4,141	4,141	0	0	4,141
	PEMBROKE TELEPHONE CO. INC.	9	2,549	446	272	21	127	111	3,526	3,526	0	0	3,526
	FRONTIER COMMUNICATIONS OF FAIRMOUNT	10	1,152	173	70	8	50	670	2,123	2,123	0	20	2,143
	WAVERLY HALL TEL. CO., INC.	1	1,257	0	0	0	0	0	1,257	0	1,257	0	1,257
	GLENWOOD TELEPHONE COMPANY	1	811	0	0	0	0	0	811	0	811	0	811
	QUINCY TELEPHONE CO-GA DIV.	8	598	82	11	4	25	10	730	730	0	26	756
SUBTOTAL			2,749,398	616,091	357,731	113,840	132,500	305,848	4,275,408	4,243,997	31,411	222,697	4,498,105
HAWAII	GTE HAWAIIAN TEL. CO. INC.	31	347,491	85,619	113,855	2,409	23,079	42,835	615,288	586,974	28,314	17,566	632,854
SUBTOTAL			347,491	85,619	113,855	2,409	23,079	42,835	615,288	586,974	28,314	17,566	632,854
IDAHO	MOUNTAIN BELL-IDAHO	56	243,524	59,885	26,556	20,578	20,296	49,903	420,742	420,742	0	27,894	448,636
	GTE NORTHWEST INC. - IDAHO	32	63,798	11,751	7,604	3,719	9,065	11,873	107,810	107,779	31	4,076	111,886
	PACIFIC NORTHWEST BELL-IDAHO	37	16,928	3,703	1,690	1,374	2,115	3,073	28,883	28,883	0	1,683	30,566
	CITIZENS TELECOMMUNICATIONS COMPANY OF ID	23	9,411	1,466	594	553	882	3,275	16,181	16,181	0	3,057	19,238
	PROJECT MUTUAL TEL. COOP. ASSN.	17	5,115	822	339	756	250	619	7,901	7,901	0	62	7,963
	FREMONT TELCOM	29	3,605	622	350	103	435	493	5,608	5,608	0	292	5,900
	ALBION TEL. CO. INC.	25	2,798	659	180	127	235	607	4,606	4,606	0	115	4,721
	CENTURY TELEPHONE OF IDAHO	12	1,569	333	138	76	596	1,180	3,892	3,892	0	69	3,961
	FARMERS MUTUAL TEL CO LTD. - ID	9	1,865	422	117	69	164	220	2,857	2,857	0	192	3,049
	FILER MUTUAL TELEPHONE COMPANY - ID	10	1,413	163	97	20	106	239	2,038	2,038	0	70	2,108
	CAMBRIDGE TEL. CO.,INC.-ID	13	1,319	181	76	52	107	252	1,987	1,987	0	59	2,046
	CUSTER TEL. COOPERATIVE INC.	10	1,222	178	62	25	266	127	1,880	1,880	0	0	1,880
	MUD LAKE TEL. COOP. INC. ASSOC.	8	639	223	70	38	345	101	1,416	1,416	0	53	1,469
	GEM STATE UTILITIES CORP-ID	9	869	163	74	28	143	101	1,398	1,333	65	31	1,429
	ROCKLAND TEL. CO.,INC.	11	816	175	39	33	92	80	1,235	1,235	0	25	1,260
	MIDVALE TEL. EXCH. INC.	15	750	73	36	11	122	58	1,050	920	130	99	1,149
	POTLATCH TELEPHONE COMPANY INC.	1	1,049	0	0	0	0	0	1,049	0	1,049	0	1,049
	TROY TELEPHONE COMPANY	1	884	0	0	0	0	0	884	0	884	0	884
	SILVER STAR TEL. CO. INC.-ID	11	355	82	19	6	24	24	510	510	0	13	523
	RURAL TELEPHONE COMPANY - ID	1	423	0	0	0	0	0	423	0	423	0	423
	INLAND TELEPHONE COMPANY - ID	1	306	0	0	0	0	0	306	0	306	0	306
SUBTOTAL			356,687	80,901	38,041	27,658	35,243	72,225	612,755	609,858	2,897	37,781	650,536
ILLINOIS	ILLINOIS BELL TEL. CO.	108	4,146,767	882,688	485,316	180,698	98,795	439,735	6,233,999	6,233,999	0	196,354	6,430,353
	GTE NORTH INC. - ILLINOIS	65	423,652	62,889	27,787	10,018	25,152	50,474	599,972	553,234	46,738	25,353	625,325
	CENTRAL TEL. CO. OF IL	42	135,954	27,548	25,380	5,765	3,526	8,275	206,448	206,448	0	4,921	211,369
	CONTEL OF IL, INC. DBA GTE ILLINOIS	46	119,120	19,916	8,426	3,247	7,041	14,791	172,541	165,367	7,174	3,697	176,238
	ILLINOIS CONSOLIDATED TELEPHONE COMPANY	13	36,194	6,061	2,262	724	2,325	37,076	84,642	84,642	0	3,550	88,192
	GTE SOUTH INC. - ILLINOIS	28	28,048	4,252	1,510	897	1,791	3,094	39,592	38,709	883	1,729	41,321
	HARRISONVILLE TELEPHONE COMPANY	14	7,257	1,362	745	407	599	6,772	17,142	17,142	0	0	17,142
	GENESEO TELEPHONE COMPANY	11	3,107	565	308	108	456	3,051	7,593	7,593	0	170	7,763
	WABASH TELEPHONE COOPERATIVE INC.	10	1,924	372	69	37	184	2,268	4,854	4,854	0	0	4,854
	FRONTIER COMMUNICATIONS OF ILLINOIS, INC	10	2,734	597	139	34	182	901	4,587	4,587	0	46	4,633
	MCDONOUGH TELEPHONE COOPERATIVE INC.	8	1,247	173	102	42	79	2,763	4,406	4,406	0	47	4,453
	FRONTIER COMMUNICATIONS-MIDLAND, INC.	11	3,213	488	104	22	197	313	4,337	4,337	0	81	4,418
	MID CENTURY TEL. COOP., INC.	9	1,880	253	137	26	128	1,993	4,417	4,417	0	0	4,417

PUBLIC VERSION

Table 5: NUMBER OF LONG DISTANCE CARRIERS, LONG DISTANCE CARRIER'S PRESUBSCRIBED LINES AND EQUAL ACCESS LINES BY LOCAL EXCHANGE CARRIERS (AS OF DECEMBER 31, 1996)

ILLINOIS CONT'D	ADAMS TELEPHONE COOPERATIVE	10	1,055	134	53	42	57	2,913	4,254	4,254	0	4	4,258
	SHAWNEE TELEPHONE COMPANY	11	1,225	145	66	21	117	2,516	4,090	4,090	0	27	4,117
	MARSEILLES TEL. CO. OF MARS.	9	2,671	321	109	33	122	505	3,761	3,761	0	0	3,761
	METAMORA TELEPHONE COMPANY	11	2,289	281	182	57	57	849	3,712	3,712	0	0	3,712
	CASS COUNTY TELEPHONE COMPANY	10	1,374	181	42	32	231	1,159	3,019	3,019	0	29	3,048
	FRONTIER COMMUNICATIONS-SCHUYLER, INC.	8	2,116	337	143	103	73	211	2,983	2,983	0	48	3,031
	EGYPTIAN TELEPHONE COOPERATIVE ASSN.	11	1,811	203	79	23	61	666	2,843	2,843	0	173	3,016
	HAMILTON COUNTY TELEPHONE COOP.	11	1,399	153	50	24	134	550	2,310	2,310	0	0	2,310
	FRONTIER COMMUNICATIONS OF MT. PULASKI	11	1,433	153	56	22	100	110	1,874	1,874	0	39	1,913
	EL PASO TELEPHONE COMPANY	9	705	157	30	25	78	892	1,887	1,887	0	13	1,900
	CAMBRIDGE TELEPHONE COMPANY - IL	9	902	140	98	38	50	556	1,784	1,784	0	77	1,861
	FRONTIER COMMUNICATIONS OF ORION, INC.	8	1,082	178	44	34	57	416	1,811	1,811	0	9	1,820
	HENRY COUNTY TEL. CO.	9	863	150	55	30	79	342	1,519	1,519	0	78	1,597
	MONTROSE MUTUAL TELEPHONE COMPANY	9	769	95	28	16	89	582	1,579	1,579	0	1	1,580
	MADISON TELEPHONE COMPANY	10	186	41	32	16	41	1,105	1,421	1,421	0	16	1,437
	GRIDLEY TELEPHONE COMPANY	9	315	92	44	11	20	924	1,406	1,406	0	0	1,406
	GLASFORD TELEPHONE COMPANY	6	1,031	130	26	9	18	8	1,222	1,222	0	0	1,222
	ODIN TELEPHONE EXCHANGE INC.	9	967	64	21	15	29	48	1,144	1,144	0	0	1,144
	ALHAMBRA-GRANITFORK TELEPHONE COMPANY	10	290	35	19	10	39	725	1,118	1,118	0	10	1,128
	LA HARPE TELEPHONE COMPANY	7	342	37	21	16	31	647	1,094	1,094	0	0	1,094
	FRONTIER COMMUNICATIONS-PRARIE, INC.	9	650	123	24	12	30	208	1,047	1,047	0	14	1,061
	HOME TELEPHONE COMPANY - ST JACOB	9	114	17	15	8	20	751	925	925	0	5	930
	C-R TELEPHONE COMPANY	10	725	87	13	25	42	24	916	916	0	0	916
	FRONTIER COMMUNICATIONS OF LAKESIDE, INC	8	548	75	24	2	18	210	877	877	0	10	887
	FRONTIER COMMUNICATIONS OF DEPUE, INC.	7	532	62	36	0	18	155	803	803	0	0	803
	WOODHULL COMMUNITY TELEPHONE COMPANY	8	408	57	18	2	18	260	763	763	0	16	779
	GRAFTON TELEPHONE COMPANY	8	233	19	32	3	18	458	763	763	0	11	774
	VIOLA HOME TELEPHONE COMPANY	9	399	16	11	6	25	312	769	769	0	0	769
	MOULTRIE INDEPENDENT TELEPHONE COMPANY	9	298	55	17	8	26	319	723	723	0	30	753
	CROSSVILLE TELEPHONE COMPANY	8	316	21	38	0	17	301	693	693	0	0	693
	NEW WINDSOR TELEPHONE COMPANY	9	302	29	23	3	19	247	623	623	0	1	624
	LEAF RIVER TELEPHONE COMPANY	9	325	62	21	10	50	150	618	618	0	3	621
	REYNOLDS TELEPHONE COMPANY	7	146	22	11	8	13	357	557	557	0	15	572
	YATES CITY TELEPHONE COMPANY	8	350	28	9	2	3	163	555	555	0	2	557
	TONICA TELEPHONE COMPANY	7	249	14	12	4	7	250	536	536	0	0	536
	ONEIDA TELEPHONE EXCHANGE	6	98	16	18	2	6	390	530	530	0	0	530
	FLAT ROCK TELEPHONE CO-OP, INCORPORATED	7	46	12	2	2	3	445	510	510	0	0	510
	MCNABB TELEPHONE COMPANY	9	169	17	3	1	16	239	445	445	0	13	458
	CLARKSVILLE MUTUAL TELEPHONE COMPANY	1	183	0	0	0	0	0	183	0	183	0	183
	LEONORE MUTUAL TELEPHONE COMPANY	1	145	0	0	0	0	0	145	0	145	0	145
	THE GRANDVIEW MUTUAL TELEPHONE COMPANY	1	93	0	0	0	0	0	93	0	93	0	93
	KINSMAN MUTUAL TELEPHONE COMPANY	1	89	0	0	0	0	0	89	0	89	0	89
	STELLE TEL. CO.	1	71	0	0	0	0	0	71	0	71	0	71
SUBTOTAL			4,940,408	1,010,923	553,810	202,698	142,267	592,469	7,442,595	7,387,219	55,376	236,592	7,679,187
INDIANA	INDIANA BELL TEL. CO.	83	1,325,314	257,248	115,275	68,358	49,029	137,829	1,953,053	1,953,053	0	132,355	2,085,408
	GTE NORTH INC. - INDIANA	67	422,693	86,379	39,807	15,573	23,007	42,138	629,597	610,832	18,765	38,522	668,119
	UNITED TELEPHONE CO. OF INDIANA INC.	42	141,032	25,111	35,750	4,262	9,082	8,710	223,947	221,468	2,479	2,599	226,546
	CONTEL OF INDIANA, INC. DBA GTE INDIANA	39	120,268	18,082	6,046	6,442	5,120	11,487	167,445	166,183	1,262	4,757	172,202
	SMITHVILLE TEL. CO., INC.	13	20,452	3,392	1,245	386	785	587	26,847	26,847	0	1,369	28,216
	NORTHWESTERN INDIANA TEL. CO., INC.	11	7,554	2,463	681	369	373	216	11,656	11,656	0	44	11,700
	CLAY CTY. RURAL TEL. COOP., INC.	13	8,422	1,055	380	147	352	274	10,630	10,630	0	112	10,742
	CONTEL OF SOUTH, INC. DBA GTE SYSTEMS OF IND	16	6,692	1,258	351	189	544	602	9,636	9,171	465	432	10,068
	COMMUNICATIONS CORP OF INDIANA	12	7,504	930	387	209	371	204	9,605	9,605	0	106	9,711
	ROCHESTER TELEPHONE CO. INC.	10	5,219	912	313	217	315	113	7,089	7,089	0	91	7,180
	HANCOCK RURAL TELEPHONE CORP.	13	4,596	759	264	92	240	184	6,135	6,135	0	116	6,251
	PERRY-SPENCER RURAL TEL. COOP., INC.	11	4,287	429	145	64	159	96	5,180	5,180	0	158	5,338
	TIPTON TELEPHONE COMPANY INC.	9	3,802	475	129	47	144	67	4,664	4,664	0	31	4,695
	SOUTHEASTERN INDIANA RURAL TEL. COOP.	10	3,424	320	98	95	104	117	4,158	4,158	0	0	4,158
	SUNMAN TEL. CO., INC.	10	2,954	426	155	109	227	146	4,017	4,017	0	8	4,025
	TRI-COUNTY TEL. CO., INC.-IN	11	2,441	516	151	140	99	84	3,431	3,431	0	15	3,446
	CENTRAL INDIANA TELEPHONE CO. INC.	8	1,466	311	129	29	70	1,099	3,104	3,104	0	34	3,138
	WASH. CTY. RURAL TEL. COOP., INC.	9	2,427	254	102	53	90	50	2,976	2,976	0	64	3,040
	DAVIESS-MARTIN CTY. RURAL TEL. CORP.	10	2,240	329	88	72	174	77	2,980	2,980	0	0	2,980
	LIGONIER TELEPHONE COMPANY	11	1,682	413	202	83	99	113	2,592	2,592	0	24	2,616

PUBLIC VERSION

Table 5: NUMBER OF LONG DISTANCE CARRIERS, LONG DISTANCE CARRIER'S PRESUBSCRIBED LINES AND EQUAL ACCESS LINES BY LOCAL EXCHANGE CARRIERS (AS OF DECEMBER 31, 1996)

INDIANA CONT'D	FRONTIER COMMUNICATIONS OF THORNTOWN, IN	9	1,682	286	85	20	41	360	2,474	2,474	0	19	2,493
	FRONTIER COMMUNICATIONS OF INDIANA, INC.	8	1,737	220	80	47	104	280	2,468	2,468	0	8	2,476
	MULBERRY COOP. TELEPHONE CO INC.	7	1,941	375	88	32	0	13	2,449	2,449	0	0	2,449
	CITIZENS TELEPHONE CORP - WARREN	10	1,802	192	86	3	137	77	2,297	2,297	0	34	2,331
	HOME TELEPHONE COMPANY INC.	9	1,767	157	47	22	80	23	2,096	2,096	0	11	2,107
	HOME TELEPHONE COMPANY OF PITTSBORO INC	8	1,593	275	61	58	69	24	2,100	2,100	0	5	2,105
	COMMUNICATIONS CORP. OF SOUTHERN INDIANA	9	1,544	242	145	14	41	17	2,003	2,003	0	6	2,009
	PULASKI-WHITE RURAL TEL. COOP., INC.	8	1,578	169	102	15	76	26	1,966	1,966	0	0	1,966
	NEW PARIS TELEPHONE INC.	10	1,225	290	118	112	112	76	1,933	1,933	0	7	1,940
	MONON TELEPHONE CO. INC.	12	1,473	192	38	51	52	31	1,837	1,837	0	87	1,924
	SWEETSER RURAL TEL. CO., INC.	9	1,188	216	47	29	92	48	1,620	1,620	0	155	1,775
	CAMDEN TELEPHONE CO INC - INDIANA	10	1,363	208	58	29	57	20	1,735	1,735	0	0	1,735
	ODON TEL. CO.	9	742	209	33	12	66	541	1,603	1,603	0	20	1,623
	YEOMAN TELEPHONE COMPANY INC.	10	1,003	153	71	19	51	17	1,314	1,314	0	4	1,318
	SWAYZEE TEL. CO., INC.	10	780	149	56	7	53	34	1,079	1,079	0	0	1,079
	CRAIGVILLE TELEPHONE CO INC.	9	570	126	51	36	59	37	879	879	0	0	879
	NEW LISBON TELEPHONE COMPANY INC.	6	684	72	15	0	52	6	829	829	0	0	829
	WEST POINT TELEPHONE CO. INC.	1	667	0	0	0	0	0	667	0	667	0	667
	BLOOMINGDALE HOME TEL. CO., INC.	7	472	53	12	5	0	50	592	592	0	4	596
	MERCHANTS & FARMERS TELEPHONE CO	6	429	66	17	8	0	24	544	544	0	0	544
	GEETINGSVILLE TELEPHONE CO INC.	7	385	62	13	3	16	2	481	481	0	0	481
	S & W TEL. CO., INC.	8	374	43	16	3	14	9	459	459	0	2	461
SUBTOTAL			2,119,468	404,817	202,057	97,461	91,556	205,908	3,122,167	3,098,529	23,638	181,199	3,303,366
IOWA	NORTHWESTERN BELL-IOWA	67	612,459	180,238	53,367	60,433	25,938	56,927	989,362	989,362	0	45,130	1,034,492
	GTE NORTH INC. - IOWA	41	72,717	15,389	5,295	3,310	4,009	13,449	114,169	110,639	3,530	1,468	115,637
	CONTEL OF IA, INC., DBA GTE IA	30	51,350	8,488	2,761	1,938	2,812	9,018	76,367	73,347	3,020	789	77,156
	CONTEL OF KS, INC., DBA GTE SYSTEMS OF IA	29	45,894	7,961	2,979	2,644	2,240	8,799	70,517	70,299	218	1,067	71,584
	FRONTIER COMMUNICATIONS OF IOWA, INC.	19	22,849	7,190	1,895	2,337	1,809	16,370	52,450	52,450	0	746	53,196
	SOUTH SLOPE COOP. TEL. CO.	14	4,128	2,330	674	336	222	798	8,488	8,488	0	32	8,520
	WINNEBAGO COOP TELEPHONE ASSN - IA	16	4,077	1,088	600	173	279	578	6,795	6,795	0	49	6,844
	CLEAR LAKE INDP. TELEPHONE CO.	14	4,393	869	576	232	176	313	6,559	6,559	0	8	6,567
	GRAND RIVER MUTUAL TEL CORP - IA	12	4,146	630	279	90	300	353	5,798	5,798	0	114	5,912
	CENTRAL SCOTT TELEPHONE	12	2,947	974	352	151	157	621	5,202	5,202	0	0	5,202
	WEST IOWA TELEPHONE COMPANY	13	3,040	826	278	273	112	330	4,859	4,859	0	92	4,951
	WEBSTER-CALHOUN COOP TELEPHONE ASSN.	13	912	80	59	15	103	3,751	4,920	4,920	0	9	4,929
	MUTUAL TEL. CO.	12	2,514	666	254	526	108	176	4,244	4,244	0	53	4,297
	ACE TELEPHONE ASSOCIATION- IOWA	12	2,860	660	189	174	84	189	4,156	4,156	0	54	4,210
	NORTHWEST IOWA TEL. CO., INC.	11	1,784	1,453	117	119	34	67	3,574	3,574	0	387	3,961
	THE CITIZENS MUTUAL TELEPHONE COMPANY	14	2,540	430	182	172	139	344	3,807	3,807	0	71	3,878
	WEST LIBERTY TELEPHONE COMPANY	10	2,335	600	288	97	103	244	3,667	3,667	0	65	3,732
	WESTERN IOWA TELEPHONE ASSN.	12	2,165	664	171	104	76	229	3,409	3,408	0	1	3,407
	JEFFERSON TELEPHONE COMPANY- IA	13	2,274	333	125	86	49	321	3,188	3,188	0	160	3,348
	NORTHERN IOWA TELEPHONE COMPANY	11	1,406	546	192	152	170	200	2,666	2,666	0	24	2,690
	VAN BUREN TELEPHONE CO INC.	14	1,982	265	110	68	92	64	2,581	2,581	0	0	2,581
	FARMERS MUTUAL TEL. CO.-NORA SPRINGS	14	1,627	342	238	40	75	64	2,386	2,386	0	31	2,417
	HEART OF IOWA TELEPHONE COOP.	11	1,398	223	107	84	42	204	2,058	2,058	0	101	2,159
	FARMERS MUTUAL TEL. COOP.-SHELLSBURG	11	666	339	204	749	32	71	2,061	2,061	0	46	2,107
	MEDIAPOLIS TELEPHONE COMPANY	13	1,417	246	163	46	58	74	2,004	2,004	0	51	2,055
	BUTLER-BREMER MUT. TELEPHONE COMPANY	8	1,298	321	169	29	53	117	1,987	1,987	0	11	1,998
	GRISWOLD CO-OP TELEPHONE COMPANY	9	1,513	170	105	37	53	120	1,998	1,998	0	0	1,998
	FARMERS MUTUAL COOP TEL CO- HARLAN	10	1,267	314	201	59	48	94	1,983	1,983	0	1	1,984
	MONTEZUMA MUTUAL TELEPHONE COMPANY	11	1,275	339	91	53	53	122	1,933	1,933	0	39	1,972
	LA PORTE CITY TELEPHONE COMPANY	10	1,130	322	238	109	57	72	1,928	1,928	0	12	1,940
	WILTON TELEPHONE COMPANY	12	1,143	266	123	41	141	157	1,871	1,871	0	15	1,886
	HILLS TEL. CO., INC.-IA	11	973	333	120	256	76	120	1,878	1,878	0	2	1,880
	KALONA COOP TELEPHONE COMPANY	13	1,073	316	190	104	81	112	1,876	1,876	0	0	1,876
	LEHIGH VALLEY COOP. TEL. ASSN.	10	1,435	113	120	23	53	90	1,834	1,834	0	34	1,868
	NORTHEAST IOWA TELEPHONE CO.	10	1,122	232	104	43	38	274	1,813	1,813	0	52	1,865
	FARMERS MUTUAL TEL. CO.-JESUP	1	1,841	0	0	0	0	0	1,841	0	1,841	0	1,841
	SCHALLER TEL. CO.	12	1,258	241	68	182	29	58	1,836	1,836	0	1	1,837
	PANORA COOP. TEL. ASSN., INC.	10	906	227	95	18	60	498	1,774	1,774	0	41	1,815
	OGDEN TELEPHONE COMPANY - IA	12	1,174	201	128	60	80	135	1,778	1,778	0	0	1,778
	CASCADE TELEPHONE COMPANY	11	1,148	272	147	25	31	139	1,762	1,762	0	0	1,762
	HUXLEY COOP TELEPHONE COMPANY	9	1,013	259	158	35	101	93	1,659	1,659	0	48	1,707

PUBLIC VERSION

Table 5: NUMBER OF LONG DISTANCE CARRIERS, LONG DISTANCE CARRIER'S PRESUBSCRIBED LINES AND EQUAL ACCESS LINES BY LOCAL EXCHANGE CARRIERS (AS OF DECEMBER 31, 1996)

IOWA CONT'D	FARMERS TEL. CO.-RICEVILLE	10	1,225	243	123	16	61	20	1,688	1,688	0	13	1,701
	POSTVILLE TELEPHONE CO DBA PTI COMMUNICA	10	719	333	80	124	28	175	1,459	1,459	0	85	1,544
	BROOKLYN MUTUAL TELEPHONE COMPANY	9	499	129	48	710	22	72	1,480	1,480	0	28	1,508
	COOPERATIVE TELEPHONE COMPANY	9	1,176	123	103	15	36	40	1,493	1,493	0	0	1,493
	EAST BUCHANAN TELEPHONE COOP	9	1,012	188	145	38	56	38	1,477	1,477	0	0	1,477
	MARNE & ELK HORN TELEPHONE CO.	12	992	150	73	20	63	154	1,452	1,452	0	0	1,452
	FARMERS COOP TELEPHONE CO - DYSART	9	1,065	74	104	27	22	92	1,384	1,384	0	2	1,386
	ROCKWELL COOP TELEPHONE ASSN.	10	960	112	126	5	75	78	1,356	1,356	0	12	1,368
	AMANA COLONIES TELEPHONE COMPANY	10	647	215	312	20	24	105	1,323	1,323	0	21	1,344
	NORTHWEST TEL. COOP.	12	738	275	189	23	43	54	1,322	1,322	0	11	1,333
	WELLMAN COOP TELEPHONE ASSN.	10	851	225	98	49	57	32	1,312	1,312	0	0	1,312
	SPRINGVILLE COOP. TEL. ASSN.	11	691	235	108	37	46	132	1,249	1,249	0	0	1,249
	MID-IOWA TELEPHONE CO.	12	929	100	48	22	34	67	1,200	1,200	0	21	1,221
	VILLISCA FARMERS TELEPHONE CO.	5	931	109	44	0	76	20	1,180	1,180	0	17	1,197
	FARMERS MUTUAL TEL. CO. - STANTON	10	755	163	57	17	57	124	1,173	1,173	0	10	1,183
	PRESTON TELEPHONE COMPANY	9	800	136	80	7	24	112	1,159	1,159	0	10	1,169
	BREDA TELEPHONE COOPERATIVE	13	781	142	54	86	30	54	1,147	1,147	0	9	1,156
	SAC COUNTY MUTUAL TEL. CO.	9	799	161	58	37	14	74	1,143	1,143	0	0	1,143
	PRAIRIE TELEPHONE COMPANY INC.	11	679	152	47	18	72	149	1,117	1,117	0	13	1,130
	SHARON TEL. CO.	10	635	209	110	21	44	76	1,095	1,095	0	28	1,123
	INTERSTATE 35 TELEPHONE COMPANY	9	701	163	128	15	42	60	1,109	1,109	0	0	1,109
	FARMERS & BUSINESSMEN'S TEL. CO.	10	483	167	96	10	13	316	1,105	1,105	0	0	1,105
	SULLY TEL. ASSOC.	10	675	170	95	52	34	68	1,094	1,094	0	0	1,094
	KEYSTONE FRMS. COOP TELEPHONE CO	9	375	102	144	367	12	45	1,045	1,045	0	0	1,045
	SHELL ROCK TEL. CO.	12	740	114	75	37	21	53	1,040	1,040	0	0	1,040
	RIVER VALLEY TEL. COOP.	10	714	98	70	20	61	34	997	997	0	17	1,014
	DANVILLE MUT. TELEPHONE COMPANY	8	646	152	95	20	47	45	1,005	1,005	0	0	1,005
	FRONTIER COMMUNICATIONS-SCHUYLER, INC.	10	626	129	133	19	27	45	979	979	0	6	985
	MODERN COOP TELEPHONE COMPANY	11	655	123	80	16	23	41	937	937	0	0	937
	MABEL COOPERATIVE TELEPHONE CO. IA	8	823	48	18	5	8	8	910	910	0	0	910
	PEOPLES TELEPHONE COMPANY - IA	9	581	122	62	20	8	62	855	855	0	9	864
	NORTH ENGLISH COOP TEL. COMPANY	10	619	140	43	17	21	16	856	856	0	6	862
	MECHANICSVILLE TELEPHONE COMPANY	8	513	157	48	37	26	40	821	821	0	26	847
	CLARENCE TELEPHONE COMPANY INC.	10	566	101	61	22	30	48	822	822	0	0	822
	C-M-L TEL. COOP. ASSN.	8	512	127	54	25	13	71	802	802	0	10	812
	HUBBARD COOP. TEL. ASSN.	10	523	58	42	35	47	93	798	798	0	6	804
	MINERVA VALLEY TELEPHONE CO. INC.	10	471	99	78	16	51	59	774	774	0	25	799
	OLIN TELEPHONE CO INC.	11	433	114	50	20	16	145	778	778	0	13	791
	READLYN TELEPHONE COMPANY	11	371	152	165	35	35	33	791	791	0	0	791
	FARMERS & MERCHANTS MUTUAL TEL. CO.	5	552	126	20	0	64	23	785	785	0	0	785
	FARMERS TELEPHONE COMPANY- ESSEX	10	452	104	33	57	37	83	766	766	0	15	781
	RUTHVEN TEL. EXCH. CO.	9	516	98	72	24	13	28	751	751	0	30	781
	WALNUT TELEPHONE COMPANY	11	508	105	46	11	16	63	749	749	0	18	767
	SWISHER TEL. CO.	9	430	191	68	18	24	17	748	748	0	9	757
	CORN BELT TELEPHONE COMPANY	8	559	55	36	43	7	45	745	745	0	0	745
	SOUTHWEST TEL. EXCH., INC.	7	439	123	68	4	53	56	743	743	0	0	743
	MILES COOP. TEL. ASSN.	11	453	125	66	8	21	60	733	733	0	0	733
	STRATFORD MUTUAL TEL. CO.	9	257	81	52	300	18	15	723	723	0	10	733
	HOSPERS TELEPHONE EXCHANGE INC.	11	370	155	45	46	17	87	720	720	0	5	725
	ATKINS TELEPHONE COMPANY	9	318	144	86	128	12	21	709	709	0	13	722
	MASSENA TELEPHONE COMPANY	9	440	77	47	11	22	109	706	706	0	8	714
	WYOMING MUTUAL TELEPHONE COMPANY	10	401	101	32	11	11	146	702	702	0	0	702
	LOST NATION - ELWOOD TEL. CO.	9	297	75	53	169	10	75	679	679	0	19	698
	DUMONT TELEPHONE COMPANY	11	163	35	35	334	9	117	693	693	0	0	693
	COOPERATIVE TELEPHONE EXCHANGE	9	477	52	45	25	13	72	684	684	0	0	684
	ELLSWORTH COOP. TELEPHONE ASSN.	8	550	8	21	18	20	47	664	664	0	17	681
	MUTUAL TEL. CO. OF MORNING SUN	12	518	46	41	17	17	42	681	681	0	0	681
	NORWAY RURAL TELEPHONE COMPANY	9	401	79	16	42	45	73	656	656	0	21	677
	UNITED FARMERS TELEPHONE COMPANY	10	323	108	65	6	5	149	656	656	0	16	672
	COON VALLEY COOP. TEL. ASSN., INC.	7	540	55	10	10	17	31	663	663	0	5	668
	VAN HORNE COOP TELEPHONE CO.	8	107	75	56	66	13	329	646	646	0	22	668
	COLO TELEPHONE COMPANY	11	483	94	17	5	30	34	663	663	0	0	663
	COON CREEK TELEPHONE COMPANY	9	156	108	58	241	24	55	642	642	0	16	658
	LA MOTTE TELEPHONE CO.	1	658	0	0	0	0	0	658	0	658	0	658
	DUNKERTON TELEPHONE COOP.,INC.	1	649	0	0	0	0	0	649	0	649	0	649

PUBLIC VERSION

Table 5: NUMBER OF LONG DISTANCE CARRIERS, LONG DISTANCE CARRIER'S PRESUBSCRIBED LINES AND EQUAL ACCESS LINES BY LOCAL EXCHANGE CARRIERS (AS OF DECEMBER 31, 1996)

IOWA CONT'D	DIXON TELEPHONE COMPANY	11	459	37	44	8	20	64	632	632	0	8	640
	GOLDFIELD TEL. CO.	9	401	84	22	9	10	86	612	612	0	8	620
	GRAND MOUND COOP TELEPHONE ASSN.	8	428	53	37	4	14	59	595	595	0	9	604
	MANILLA TELEPHONE COMPANY	6	433	84	31	16	7	30	601	601	0	0	601
	BERNARD TELEPHONE COMPANY INC.	9	334	96	52	11	7	83	583	583	0	1	584
	FARMERS MUTUAL COOP. TEL. CO.-MOULTON	8	372	59	59	10	52	20	572	572	0	0	572
	TITONKA TELEPHONE COMPANY	7	350	72	38	23	20	59	562	562	0	0	562
	VENTURA TELEPHONE CO. INC.	8	394	69	42	11	15	10	541	541	0	0	541
	HAWKEYE TELEPHONE COMPANY	10	370	67	41	8	8	34	528	528	0	5	533
	SCRANTON TEL. CO.	7	397	72	17	11	6	8	511	511	0	0	511
	RADCLIFFE TELEPHONE CO INC.	10	293	79	38	16	38	44	508	508	0	0	508
	ROYAL TEL. CO.	1	484	0	0	0	0	0	484	0	484	0	484
	CASEY MUTUAL TELEPHONE CO.	12	361	57	12	14	3	31	478	478	0	5	483
	PALO COOP. TEL. ASSN.	8	263	92	50	9	14	32	460	460	0	8	468
	RINGSTED TELEPHONE COMPANY	9	348	33	33	2	16	35	467	467	0	1	468
	MINBURN TELEPHONE COMPANY	10	341	39	24	2	9	40	455	455	0	12	467
	TERRIL TELEPHONE COMPANY	9	288	74	44	13	11	8	438	438	0	5	443
	WEBB-DICKENS TELEPHONE CORPORATION	7	204	82	36	14	10	88	434	434	0	7	441
	FARMERS TELEPHONE COMPANY- BATAVIA	6	292	57	41	7	15	12	424	424	0	16	440
	THE BURT TELEPHONE COMPANY	10	270	62	34	10	21	36	433	433	0	0	433
	IAMO TELEPHONE COMPANY- IA	9	263	42	20	5	25	71	426	426	0	1	427
	CUMBERLAND TEL. CO.	5	293	75	32	9	0	8	417	417	0	0	417
	AYRSHIRE FMRS. MUT. TEL. CO.	7	241	60	20	5	7	33	366	366	0	14	380
	WESTSIDE INDP. TELEPHONE COMPANY	8	212	61	23	64	7	7	374	374	0	0	374
	TEMPLETON TELEPHONE COMPANY	8	209	43	27	7	15	64	365	365	0	1	366
	ANDREW TELEPHONE CO. INC.	7	218	73	19	0	3	44	357	357	0	0	357
	FENTON CO-OP TELEPHONE COMPANY	9	221	44	11	1	2	77	356	356	0	0	356
	LYNNVILLE COMM. TEL. CO., INC.	11	234	45	25	11	13	14	342	342	0	1	343
	BALDWIN-NASHVILLE TELEPHONE CO. INC.	7	215	56	27	4	3	28	333	333	0	4	337
	ARCADIA TELEPHONE COOP	6	245	33	12	12	14	15	331	331	0	0	331
	JORDAN SOLDIER VAL COOP. TEL. CO.	9	140	43	23	84	1	37	328	328	0	0	328
	PALMER MUTUAL TELEPHONE CO.	9	181	60	38	9	13	23	324	324	0	3	327
	DEEP RIVER MUT. TELEPHONE COMPANY	10	225	43	10	2	2	35	317	317	0	9	326
	SEARSBORO TEL. CO.	3	288	14	14	0	0	0	316	316	0	0	316
	LAUREL TELEPHONE COMPANY INC.	10	202	43	19	9	20	11	304	304	0	3	307
	LONE ROCK CO-OP TELEPHONE CO	6	180	31	11	8	10	61	301	301	0	0	301
	MARTELLE COOP. TELEPHONE ASSN.	4	199	50	38	0	0	7	294	294	0	0	294
	WOOLSTOCK MUT. TELEPHONE ASSN.	7	204	35	12	9	7	14	281	281	0	1	282
	ORAN MUTUAL TELEPHONE COMPANY	8	128	64	48	6	6	22	274	274	0	3	277
	DEFIANCE TELEPHONE COMPANY	7	181	35	9	29	2	20	276	276	0	0	276
	ONSLOW COOP TELEPHONE ASSN.	8	120	25	8	1	6	87	247	247	0	0	247
	PRAIRIEBURG TELEPHONE COMPANY INC.	5	131	52	25	0	4	5	217	217	0	0	217
	CENTURY TELEPHONE OF CHESTER, INC.	1	207	0	0	0	0	0	207	0	207	0	207
	SUPERIOR TEL. COOP.	1	182	0	0	0	0	0	182	0	182	0	182
	BARNES CITY COOP TELEPHONE CO.	6	144	15	3	3	8	5	178	178	0	0	178
	CENTER JUNCTION TEL. CO., INC.	6	111	18	5	3	1	18	156	156	0	0	156
	MILLER TELEPHONE COMPANY-IA	1	105	0	0	0	0	0	105	0	105	0	105
SUBTOTAL			924,732	247,134	79,288	79,575	42,575	121,964	1,495,268	1,484,374	10,894	51,551	1,546,819
KANSAS	SOUTHWESTERN BELL-KANSAS	72	751,504	170,138	133,661	39,278	40,552	109,765	1,244,898	1,244,898	0	38,094	1,282,992
	UNITED TELEPHONE CO OF KS	34	44,225	7,005	14,488	1,377	3,016	3,488	73,600	66,102	7,498	2,094	75,694
	UNITED TELEPHONE COMPANY OF EASTERN KANS	35	35,085	4,618	9,189	889	1,732	2,212	53,725	42,972	10,753	1,005	54,730
	PIONEER TELEPHONE ASSOCIATION INC.	11	8,328	4,104	582	666	547	233	14,460	14,460	0	338	14,798
	CRAW-KAN TELEPHONE COOP INC- KS	11	9,869	1,915	381	145	1,030	115	13,455	13,455	0	91	13,546
	RURAL TEL. SERVICE CO.,INC.	11	5,971	911	341	236	419	139	8,017	8,017	0	132	8,149
	THE UTC OF MO DBA UTC OF SE. KS	17	3,594	418	1,346	181	285	128	5,952	5,952	0	201	6,153
	SUNFLOWER TEL. CO.,INC.	1	5,423	0	0	0	0	0	5,423	0	5,423	0	5,423
	UNITED TELEPHONE ASSN. INC.	1	5,387	0	0	0	0	0	5,387	0	5,387	0	5,387
	WAMEGO TELEPHONE COMPANY INC.	10	3,480	474	194	99	182	247	4,676	4,676	0	123	4,799
	SOUTHERN KANSAS TEL. CO.,INC.	1	4,467	0	0	0	0	0	4,467	0	4,467	0	4,467
	HAVILAND TELEPHONE COMPANY INC.	12	2,972	387	117	113	198	200	3,987	3,763	224	67	4,054
	GOLDEN BELT TELEPHONE ASSN. INC.	9	2,786	379	138	39	168	63	3,573	3,573	0	33	3,606
	TRI-COUNTY TEL. ASSN. INC.-KS	9	2,564	406	118	45	131	41	3,305	3,305	0	60	3,365
	MOKAN DIAL, INC.- KS	9	1,879	294	276	102	118	170	2,839	2,839	0	2	2,841
	BLUE VALLEY TELEPHONE COMPANY	9	2,333	198	62	25	93	52	2,763	2,763	0	0	2,763

PUBLIC VERSION

Table 5: NUMBER OF LONG DISTANCE CARRIERS, LONG DISTANCE CARRIER'S PRESUBSCRIBED LINES AND EQUAL ACCESS LINES BY LOCAL EXCHANGE CARRIERS (AS OF DECEMBER 31, 1996)

KANSAS CONT'D	J. B. N. TELEPHONE COMPANY INC.	1	2,634	0	0	0	0	0	2,634	0	2,634	0	2,634
	MOUNDRIDGE TEL. CO.	11	1,848	298	116	104	80	168	2,614	2,614	0	3	2,617
	KANOKLA TEL. ASSOC. INC.- KS	1	2,369	0	0	0	0	0	2,369	0	2,369	0	2,369
	COLUMBUS TELEPHONE COMPANY	7	1,911	122	66	30	101	54	2,284	2,284	0	79	2,363
	TWIN VALLEY TEL. INC.-KS	9	1,678	230	67	33	74	144	2,226	2,226	0	81	2,307
	WHEAT STATE TELEPHONE, INC.	12	1,719	247	52	57	72	66	2,213	2,213	0	59	2,272
	WILSON TELEPHONE COMPANY INC.	11	1,742	213	45	16	82	101	2,199	2,199	0	21	2,220
	COUNCIL GROVE TEL. CO.	10	1,592	296	59	28	52	36	2,063	2,063	0	61	2,124
	HOME TELEPHONE COMPANY INC.	11	1,354	202	81	44	110	100	1,891	1,891	0	61	1,952
	SOUTH CENTRAL TEL. ASSN. INC.-KS	8	1,415	219	50	57	96	50	1,887	1,887	0	32	1,919
	RAINBOW TEL COOPERATIVE ASSN INC.	7	1,486	163	85	31	78	10	1,853	1,853	0	8	1,861
	S & T TEL. COOP. ASSN.	1	1,687	0	0	0	0	0	1,687	0	1,687	0	1,687
	ELKHART TELEPHONE COMPANY INC.	6	1,344	159	54	8	8	8	1,581	1,581	0	0	1,581
	CUNNINGHAM TELEPHONE CO. INC.	9	1,338	55	51	3	30	21	1,498	772	726	12	1,510
	TOTAH TELEPHONE CO. INC.	8	1,040	172	32	44	87	18	1,393	1,393	0	0	1,393
	PEOPLES MUTUAL TEL. CO.-KS	7	1,123	0	91	15	60	7	1,296	1,296	0	64	1,360
	H & B COMMUNICATIONS INC.	9	894	71	29	14	39	13	1,060	1,060	0	5	1,065
	S & A TEL. CO.,INC.	1	866	0	0	0	0	0	866	0	866	0	866
	MADISON TEL. CO. INC.- KS	7	611	82	14	22	39	3	771	771	0	42	813
	MUTUAL TELEPHONE COMPANY	9	291	53	14	19	26	22	425	425	0	10	435
	LA HARPE TELEPHONE COMPANY INC.	8	339	25	12	3	5	4	388	388	0	14	402
	GORHAM TELEPHONE COMPANY INC.	7	283	37	11	8	15	3	357	357	0	0	357
	ZENDA TELEPHONE COMPANY INC.	5	192	16	8	2	6	0	224	224	0	3	227
SUBTOTAL			919,623	193,908	161,830	43,733	49,531	117,681	1,486,306	1,444,272	42,034	42,795	1,529,101
KENTUCKY	SOUTH CENTRAL BELL-KENTUCKY	81	738,208	155,446	46,060	55,906	49,515	68,409	1,113,544	1,113,544	0	41,415	1,154,959
	GTE SOUTH INC. - KENTUCKY	45	225,376	43,057	18,674	17,135	20,953	31,189	356,384	356,039	345	15,651	372,035
	CINCINNATI BELL-KENTUCKY	46	127,523	18,724	9,043	2,868	4,531	14,826	177,515	177,515	0	4,606	182,121
	CONTEL KY, INC. DBA GTE KENTUCKY	30	58,900	6,865	2,251	2,359	3,919	10,429	84,723	84,635	88	2,895	87,618
	SOUTH CENTRAL RURAL TEL.COOP.CORP.INC.	15	20,045	1,741	591	470	1,352	914	25,113	25,113	0	132	25,245
	BRANDENBURG TELEPHONE COMPANY, INC.	15	14,632	2,921	1,465	764	960	1,083	21,825	21,825	0	1,725	23,550
	ALLTEL KENTUCKY, INC.	19	14,187	1,486	836	572	1,017	3,002	21,100	21,100	0	698	21,798
	WEST KY. RURAL TEL. COOP. CORP., INC.	12	13,331	1,848	492	272	364	699	17,006	17,006	0	2	17,008
	FOOTHILLS RURAL TEL. COOP. CORP., INC.	13	10,341	1,207	297	288	492	266	12,891	12,891	0	674	13,565
	MOUNTAIN RURAL TEL. COOP. CORP., INC.	10	10,260	1,373	252	235	771	423	13,314	13,314	0	204	13,518
	DUO COUNTY TEL. COOP., INC.	9	8,554	770	234	276	739	271	10,844	10,844	0	673	11,517
	LESLIE COUNTY TEL. CO., INC.	8	7,007	504	105	128	249	131	8,124	6,390	1,734	0	8,124
	THACKER/GRIGSBY TEL. CO., INC.	9	4,745	1,154	180	152	551	163	6,945	6,945	0	225	7,170
	PEOPLES RURAL TEL. COOP. CORP.	11	5,498	642	132	45	90	353	6,760	1,262	5,498	179	6,939
	BALLARD RURAL TEL. COOP. CORP., INC.	10	4,852	568	150	62	192	377	6,201	6,201	0	135	6,336
	LOGAN TELEPHONE COOPERATIVE, INC.	8	4,675	635	175	112	331	218	6,146	6,146	0	107	6,253
	HAROLD TELEPHONE CO INC.	11	4,519	774	115	35	303	145	5,891	5,891	0	0	5,891
	SALEM TEL. CO.	9	1,617	94	57	40	92	61	1,961	1,961	0	0	1,961
	LEWISPORT TEL. CO., INC.	8	1,027	134	29	24	40	41	1,295	1,295	0	5	1,300
SUBTOTAL			1,275,297	239,943	81,138	81,743	86,461	133,000	1,897,582	1,889,917	7,665	69,326	1,966,908
LOUISIANA	SOUTH CENTRAL BELL-LOUISIANA	97	1,336,560	287,415	95,232	139,369	51,623	192,126	2,102,325	2,102,325	0	149,063	2,251,388
	CENTURY TELEPHONE OF EVANGELINE, INC.	17	18,153	2,593	582	717	639	9,900	32,605	31,661	944	963	33,568
	EAST ASCENSION TELEPHONE COMPANY	17	15,065	3,389	1,315	1,016	1,023	9,465	31,273	31,273	0	1,019	32,292
	CENTURY TELEPHONE OF CENTRAL LOUISIANA	17	9,435	1,385	338	277	477	5,507	17,419	17,419	0	302	17,721
	LAFOURCHE TEL. CO.	14	10,570	1,120	347	420	235	1,000	13,692	13,692	0	215	13,907
	CENTURY TELEPHONE OF SOUTHEAST LOUISIANA	16	5,226	931	259	160	257	4,939	11,772	11,772	0	266	12,038
	CENTURY TELEPHONE OF NORTHWEST LOUISIANA	13	5,721	704	215	169	407	2,076	9,292	9,292	0	165	9,457
	CAMERON TEL. CO.- LA	14	3,369	618	180	264	106	2,562	7,099	7,099	0	590	7,689
	CENTURY TELEPHONE OF NORTH LOUISANA, INC	13	3,919	496	130	99	206	2,180	7,030	7,030	0	115	7,145
	RESERVE TELEPHONE COMPANY	13	2,407	412	118	85	156	2,026	5,204	2,797	2,407	278	5,482
	CENTURY TELEPHONE OF SOUTHWEST LOUISIANA	13	3,416	408	124	83	97	1,141	5,269	5,269	0	88	5,357
	KAPLAN TELEPHONE COMPANY	7	4,252	447	142	1	0	296	5,138	5,138	0	187	5,325
	STAR TEL. CO., INC.	1	4,762	0	0	0	0	0	4,762	0	4,762	0	4,762
	ELIZABETH TELEPHONE COMPANY INC	9	2,159	341	85	68	69	98	2,820	2,820	0	106	2,926
	CENTURY TELEPHONE COMPANY OF EAST LOUISIANA	10	1,444	290	45	29	185	539	2,532	2,532	0	133	2,665
	CENTURY TELEPHONE OF RINGGOLD, INC.	10	1,356	130	47	35	68	203	1,848	1,848	0	58	1,906
	CAMPTI-PLEASANT HILL TEL. COMPANY	1	1,883	0	0	0	0	0	1,883	0	1,883	0	1,883
	CENTURY TELEPHONE OF CHATHAM, INC.	10	500	162	25	8	61	864	1,620	1,620	0	20	1,640
	DELCAMBRE TELEPHONE COMPANY	1	1,334	0	0	0	0	0	1,334	0	1,334	0	1,334

PUBLIC VERSION

Table 5: NUMBER OF LONG DISTANCE CARRIERS, LONG DISTANCE CARRIER'S PRESUBSCRIBED LINES AND EQUAL ACCESS LINES BY LOCAL EXCHANGE CARRIERS (AS OF DECEMBER 31, 1996)

LOUISIANA CONT'D	NORTHEAST LOUISIANA TEL. CO., INC.	1	886	0	0	0	0	0	886	0	886	0	886
SUBTOTAL			1,432,428	300,811	99,184	142,800	55,598	234,982	2,265,803	2,253,587	12,216	153,568	2,419,371
MAINE	NEW ENGLAND TEL.-MAINE	61	443,822	74,345	43,890	10,098	12,250	49,189	633,594	633,594	0	13,739	647,333
	MAINE TELECOMMUNICATIONS GROUP, INC.	16	38,756	6,028	2,397	399	981	2,099	50,660	46,250	4,410	1,545	52,205
	SOMERSET TEL. CO.	11	9,366	886	356	74	161	299	11,142	11,142	0	90	11,232
	COMMUNITY SERVICE TEL. CO.	11	8,116	1,132	479	82	152	432	10,393	10,393	0	28	10,421
	SACO RIVER TEL. & TELE. CO.	9	6,493	878	330	63	145	155	8,064	8,064	0	233	8,297
	STANDISH TEL. CO.	8	5,754	760	451	85	120	88	7,258	7,258	0	147	7,405
	PINE TREE TEL. & TELE. CO.	8	4,673	698	300	91	95	258	6,115	6,115	0	139	6,254
	OXFORD COUNTY TEL. & TELE. CO.	9	3,445	860	279	75	160	205	5,024	5,024	0	364	5,388
	UNITY TEL. CO., INC.	9	3,250	462	248	85	158	332	4,535	4,535	0	266	4,801
	HARTLAND & ST. ALBANS TEL. CO.	9	2,822	246	82	36	148	48	3,382	3,382	0	11	3,393
	CHINA TEL. CO.	10	2,510	319	149	45	50	104	3,180	3,180	0	104	3,284
	HAMPDEN TEL. CO.	10	2,275	170	178	9	147	74	2,853	2,853	0	80	2,933
	WEST PENOBSCOT TEL. & TEL. CO.	9	1,750	217	62	5	106	64	2,204	2,204	0	4	2,208
	LINCOLNVILLE TEL. CO.	8	1,377	135	127	12	34	34	1,719	1,719	0	12	1,731
	WARREN TEL. CO.	9	1,458	94	60	18	41	27	1,698	1,698	0	0	1,698
	UNION RIVER TEL. CO.	8	902	161	55	4	56	8	1,186	1,186	0	11	1,197
	COBBOSSEECONTEE TEL. CO.	7	533	96	28	10	11	11	689	689	0	10	699
	BRYANT POND TEL. CO.	8	414	89	37	9	16	16	581	581	0	54	635
	ISLAND TEL. CO.	7	491	57	27	1	8	17	601	601	0	0	601
SUBTOTAL			536,207	87,633	49,535	11,204	14,839	53,460	754,878	750,468	4,410	16,837	771,715
MARYLAND	C & P TELEPHONE COMPANY OF MARYLAND	30	1,966,143	572,412	227,177	58,151	0	222,355	3,046,238	3,046,238	0	333,406	3,379,644
	ARMSTRONG TELEPHONE COMPANY OF MD	12	4,353	801	180	167	100	228	5,829	5,829	0	150	5,979
SUBTOTAL			1,970,496	573,213	227,357	58,318	100	222,583	3,052,067	3,052,067	0	333,556	3,385,623
MASSACHUSETTS	NEW ENGLAND TEL.-MA	91	2,924,007	537,770	361,166	77,914	29,837	217,325	4,148,019	4,148,019	0	127,154	4,275,173
	GRANBY TEL. & TELE. CO. - MA	9	2,224	257	151	22	34	61	2,749	2,749	0	0	2,749
	RICHMOND TEL. CO.	10	795	153	53	5	11	29	1,046	1,046	0	19	1,065
SUBTOTAL			2,927,026	538,180	361,370	77,941	29,882	217,415	4,151,814	4,151,814	0	127,173	4,278,987
MICHIGAN	MICHIGAN BELL TEL. CO.	88	3,030,151	727,671	317,543	121,312	136,784	509,955	4,843,416	4,843,416	0	172,672	5,016,088
	GTE NORTH INC. - MICHIGAN	70	399,942	74,408	25,874	8,495	26,347	85,182	620,249	577,393	42,856	26,778	647,027
	CENTURY TELEPHONE OF MICHIGAN, INC.	22	26,705	5,995	1,547	553	1,925	14,362	51,087	51,087	0	527	51,614
	CONTEL OF SOUTH DBA GTE SYSTEMS OF MICH	34	32,028	5,511	1,986	631	2,045	6,005	48,206	48,201	5	1,665	49,871
	CENTURY TELEPHONE MIDWEST, INC.	18	13,594	3,199	732	296	1,163	8,174	27,158	27,158	0	286	27,444
	FRONTIER COMMUNICATIONS OF MICHIGAN, INC	19	7,010	2,250	552	155	1,137	10,950	22,054	22,054	0	48	22,102
	WOLVERINE TELEPHONE COMPANY	13	6,429	1,128	229	77	364	787	9,014	9,014	0	20	9,034
	BARRY COUNTY TELEPHONE COMPANY	12	5,801	907	233	86	440	151	7,618	7,618	0	68	7,686
	UPPER PENINSULA TEL. CO.	8	4,684	822	288	46	204	291	6,335	6,335	0	27	6,362
	HIAWATHA TELEPHONE COMPANY	9	3,981	693	451	49	133	435	5,739	5,739	0	114	5,853
	SHIAWASSEE TELEPHONE COMPANY	13	3,973	589	203	53	280	329	5,427	5,427	0	9	5,436
	BARAGA TELEPHONE COMPANY	10	3,205	700	245	57	303	315	4,825	4,825	0	365	5,190
	ALLENDALE TELEPHONE COMPANY	12	3,323	573	482	103	310	291	5,082	5,082	0	86	5,168
	ACE TELEPHONE CO. OF MI INC.	13	3,512	606	177	66	202	306	4,869	4,869	0	120	4,989
	COMMUNICATIONS CORP. OF MICHIGAN	10	3,352	488	192	26	240	195	4,493	4,493	0	36	4,529
	ONTONAGON COUNTY TELEPHONE CO.	1	3,760	0	0	0	0	0	3,760	0	3,760	0	3,760
	PIGEON TELEPHONE COMPANY	15	2,343	495	141	40	140	378	3,537	3,537	0	80	3,617
	CENTURY TELEPHONE OF NORTHERN MICHIGAN	11	1,399	324	85	80	171	679	2,735	2,735	0	95	2,830
	CHATHAM TELEPHONE COMPANY - MI	9	2,176	312	105	9	75	83	2,760	2,760	0	33	2,793
	DEERFIELD FARMERS TELEPHONE COMPANY	10	1,823	340	120	38	139	82	2,542	2,542	0	23	2,565
	KALEVA TELEPHONE COMPANY	11	1,591	283	92	24	139	102	2,231	2,231	0	98	2,329
	BLOOMINGDALE TELEPHONE COMPANY	11	1,502	216	81	6	114	84	2,003	2,003	0	0	2,003
	CARR TELEPHONE COMPANY	7	1,506	209	64	0	75	69	1,983	1,983	0	0	1,983
	SPRINGPORT TEL. CO.	14	1,439	157	44	14	71	81	1,806	1,806	0	20	1,826
	LENNON TELEPHONE COMPANY	10	1,280	238	46	24	93	97	1,778	1,778	0	23	1,801
	CHIPPEWA COUNTY TELEPHONE COMPANY	9	1,232	165	62	5	34	65	1,563	1,563	0	0	1,563
	CLIMAX TELEPHONE COMPANY	1	1,349	0	0	0	0	0	1,349	0	1,349	0	1,349
	BLANCHARD TELEPHONE ASSOC. INC.	12	906	152	37	25	121	65	1,306	1,306	0	32	1,338
	SAND CREEK TEL. CO.	10	770	169	54	27	68	43	1,131	1,131	0	22	1,153
	PENINSULA TELEPHONE COMPANY - MI	1	1,088	0	0	0	0	0	1,088	0	1,088	0	1,088
	ISLAND TELEPHONE COMPANY	9	745	111	55	4	28	52	996	996	0	7	1,003
	WESTPHALIA TELEPHONE COMPANY	11	613	183	32	6	39	76	949	949	0	4	953

PUBLIC VERSION

Table 5: NUMBER OF LONG DISTANCE CARRIERS, LONG DISTANCE CARRIER'S PRESUBSCRIBED LINES AND EQUAL ACCESS LINES BY LOCAL EXCHANGE CARRIERS (AS OF DECEMBER 31, 1996)

MICHIGAN CONT'D	MIDWAY TELEPHONE COMPANY	1	906	0	0	0	0	0	906	0	906	0	906
	WINN TELEPHONE COMPANY	8	502	71	21	6	67	31	698	698	0	1	699
	DRENTHE TELEPHONE COMPANY	6	497	81	26	20	48	5	677	677	0	0	677
	FARMERS MUT. OF CHAPIN DBA CHAPIN TEL CO	9	432	74	23	6	19	84	638	638	0	0	638
	WALDRON TELEPHONE COMPANY	12	469	50	21	15	28	33	616	616	0	7	623
	OGDEN TELEPHONE COMPANY	7	333	49	15	3	22	7	429	429	0	0	429
SUBTOTAL			3,576,340	829,279	351,858	132,355	173,368	639,844	5,703,053	5,653,089	49,964	203,266	5,906,319
MINNESOTA	NORTHWESTERN BELL-MINNESOTA	78	1,199,759	440,201	115,759	58,836	54,242	186,220	2,055,017	2,055,017	0	91,598	2,146,615
	UNITED TELEPHONE CO OF MINN	42	77,447	20,475	24,401	2,398	4,276	9,265	138,321	128,406	9,915	1,889	140,310
	CONTEL OF MN, INC., DBA GTE MN	39	67,035	14,663	3,101	2,872	4,106	17,790	109,567	106,176	3,391	1,995	111,562
	FRONTIER COMMUNICATIONS OF MINNESOTA	30	48,941	16,631	4,831	2,419	3,932	29,967	106,721	106,721	0	954	107,675
	MANKATO CITIZENS TELEPHONE CO.	15	18,784	7,834	1,561	435	666	4,354	33,634	33,634	0	1,075	34,709
	EAST OTTER TAIL TELEPHONE CO.	19	10,016	2,494	465	478	1,291	2,173	16,919	16,919	0	153	17,072
	GARDEN VALLEY TELEPHONE COMPANY	19	9,529	1,488	269	337	799	1,725	14,147	14,147	0	573	14,720
	SCOTT RICE TEL. CO.	12	8,260	2,811	739	215	535	340	12,900	12,900	0	432	13,332
	ARVIG TELEPHONE COMPANY	10	5,588	1,412	302	95	332	3,830	11,557	11,447	110	105	11,662
	NEW ULM TELECOM, INC.	11	7,335	1,442	203	341	388	1,421	11,130	11,130	0	84	11,214
	HUTCHINSON TELEPHONE COMPANY	18	6,231	1,749	369	356	316	2,037	11,058	11,058	0	110	11,168
	LAKEDALE TELEPHONE COMPANY	18	6,685	1,841	284	220	349	1,407	10,786	10,786	0	36	10,822
	ACE TELEPHONE ASSOCIATION - MN	17	6,836	1,479	219	281	285	1,611	10,711	10,711	0	17	10,728
	SHERBURNE COUNTY RURAL TEL. CO.	19	6,252	1,476	389	187	358	1,095	9,757	9,757	0	222	9,979
	LORETEL SYSTEMS, INC.	17	5,912	1,592	316	134	666	1,006	9,626	9,626	0	39	9,665
	MELROSE TELEPHONE COMPANY	24	6,473	1,405	258	178	517	650	9,481	9,481	0	99	9,580
	MID-COMMUNICATIONS, INC.	13	5,976	1,054	251	69	251	731	8,332	8,332	0	170	8,502
	CONSOLIDATED TELEPHONE COMPANY- MN	17	5,539	1,254	281	67	221	837	8,199	8,199	0	90	8,289
	BLUE EARTH VALLEY TELEPHONE CO.	15	4,402	1,026	187	108	333	1,081	7,137	7,137	0	8	7,145
	MID STATE TELEPHONE COMPANY	12	5,242	1,003	173	93	235	321	7,067	7,067	0	2	7,069
	PAUL BUNYAN RURAL TEL. COOP.	15	4,377	1,007	232	84	360	610	6,670	6,670	0	297	6,967
	BRIDGEWATER TELEPHONE COMPANY	11	3,521	760	284	138	146	1,783	6,632	6,632	0	60	6,692
	WIKSTROM TELEPHONE COMPANY INC.	15	4,037	992	146	117	287	402	6,041	6,041	0	89	6,130
	SLEEPY EYE TEL. CO.	13	3,845	700	158	140	148	627	5,708	5,708	0	32	5,740
	REDWOOD COUNTY TEL. CO.	11	2,393	661	99	73	112	2,095	5,433	5,433	0	0	5,433
	RUNESTONE TEL. ASSN.	15	3,042	548	146	71	93	203	4,193	4,193	0	58	4,251
	PARK REGION MUTUAL TEL. CO.	16	2,538	540	102	27	179	859	4,245	4,245	0	0	4,245
	KASSON & MANTORVILLE TEL. CO.	15	2,647	594	113	56	114	357	3,881	3,881	0	22	3,903
	ECKLES TELEPHONE COMPANY	16	2,346	645	132	87	116	398	3,724	3,724	0	0	3,724
	BENTON COOPERATIVE TELEPHONE CO.	10	2,396	491	64	23	114	574	3,662	3,662	0	0	3,662
	WEST CENTRAL TELEPHONE ASSN.	13	2,312	463	71	42	281	306	3,475	3,475	0	128	3,603
	GTE NORTH INC. - MINNESOTA	12	2,188	319	82	64	93	555	3,301	2,579	722	27	3,328
	TWIN VALLEY-ULEN TEL CO INC.	12	1,925	460	94	28	295	397	3,199	3,199	0	91	3,290
	ALBANY MUTUAL TELEPHONE ASSN. INC.	17	2,017	365	50	51	109	376	2,968	2,968	0	0	2,968
	GARDONVILLE COOPERATIVE TEL. ASSN.	13	2,071	339	81	31	64	312	2,898	2,898	0	70	2,968
	PINE ISLAND TELEPHONE COMPANY	14	1,828	510	95	31	71	165	2,700	2,700	0	75	2,775
	MIDWEST TEL. CO.	13	1,759	327	80	21	94	261	2,542	2,542	0	53	2,595
	WESTERN TELEPHONE COMPANY	10	1,650	367	105	27	97	48	2,294	2,294	0	4	2,298
	CROSSLAKE TELEPHONE COMPANY	17	1,532	311	76	45	34	287	2,285	2,285	0	9	2,294
	CANNON VALLEY TELECOM, INC.	14	1,473	266	59	42	110	205	2,155	2,155	0	9	2,164
	FEDERATED TELEPHONE COOPERATIVE	12	1,265	184	49	15	54	515	2,082	2,082	0	11	2,093
	ZUMBROTA TELEPHONE COMPANY	10	1,659	197	50	32	21	100	2,059	2,059	0	15	2,074
	DEER RIVER TELEPHONE CO.	13	1,248	237	44	54	43	222	1,848	1,848	0	63	1,911
	PEOPLES TELEPHONE COMPANY - MN	14	1,176	268	100	12	68	271	1,895	1,895	0	0	1,895
	JOHNSON TELEPHONE COMPANY	13	1,257	255	53	37	86	129	1,817	1,817	0	32	1,849
	OSAKIS TELEPHONE COMPANY	14	1,270	263	61	28	63	126	1,811	1,811	0	23	1,834
	HOME TEL. CO - MN	15	1,260	265	45	23	41	181	1,815	1,815	0	8	1,823
	MADELIA TELEPHONE COMPANY	14	1,169	152	67	8	61	250	1,707	1,707	0	0	1,707
	INTERSTATE TELECOMMUNICATIONS COOP., INC	11	992	224	52	31	68	221	1,588	1,588	0	14	1,602
	CLARA CITY TELEPHONE EXCH. CO.	12	1,110	214	47	10	84	110	1,575	1,575	0	0	1,575
	K.M.P TELEPHONE COMPANY	9	1,197	178	40	21	98	32	1,566	1,566	0	0	1,566
	WINSTED TELEPHONE COMPANY	9	1,100	148	72	74	56	97	1,547	1,547	0	3	1,550
	STARBUCK TEL. CO.	8	1,071	269	46	26	57	51	1,520	1,520	0	0	1,520
	BLACKDUCK TELEPHONE COMPANY	13	779	175	30	101	72	333	1,490	1,490	0	9	1,499
	HALSTAD TELEPHONE COMPANY	12	868	265	37	4	74	161	1,409	1,409	0	14	1,423
	LONSDALE TELEPHONE COMPANY	12	990	216	29	21	39	85	1,380	1,380	0	0	1,380
	EMILY COOPERATIVE TELEPHONE CO.	12	1,009	196	27	15	36	63	1,346	1,346	0	19	1,365

PUBLIC VERSION

Table 5: NUMBER OF LONG DISTANCE CARRIERS, LONG DISTANCE CARRIER'S PRESUBSCRIBED LINES AND EQUAL ACCESS LINES BY LOCAL EXCHANGE CARRIERS (AS OF DECEMBER 31, 1996)

MINNESOTA CONT'D	SPRING GROVE COOP TEL CO	6	1,091	65	42	31	30	21	1,280	1,280	0	0	1,280
	WOODSTOCK TELEPHONE COMPANY	9	803	153	20	19	211	55	1,261	1,261	0	0	1,261
	WINTHROP TEL. CO.	13	864	190	35	24	42	63	1,218	1,218	0	5	1,223
	CITY OF BARNESVILLE TELEPHONE CO	13	660	246	37	11	34	139	1,127	1,127	0	12	1,139
	FARMERS MUTUAL TEL. CO.-BELLINGHAM	9	824	89	11	34	19	134	1,111	1,111	0	0	1,111
	MINNESOTA VALLEY TEL. CO. INC.	13	721	186	33	25	30	103	1,098	1,098	0	5	1,103
	HARMONY TELEPHONE COMPANY	12	667	94	25	11	11	127	935	935	0	0	935
	UPSALA COOPERATIVE TELEPHONE ASSN.	1	900	0	0	0	0	0	900	0	900	0	900
	VALLEY TEL. CO.-MN	10	479	96	25	3	17	191	811	811	0	7	818
	LOWRY TELEPHONE COMPANY	13	533	130	22	14	23	80	802	802	0	7	809
	WINNEBAGO COOP TELEPHONE ASSOC - MN	12	510	109	32	17	18	113	799	799	0	2	801
	NORTHLAND TELEPHONE CO DBA PTI COMMUNICA	12	578	90	24	10	50	33	785	785	0	2	787
	MABEL COOPERATIVE TELEPHONE CO.- MN	7	697	45	10	1	4	13	770	770	0	0	770
	ARROWHEAD COMMUNICATIONS CORP.	10	510	106	18	24	19	64	741	741	0	7	748
	HANCOCK TELEPHONE COMPANY- MN	9	449	162	21	23	28	33	716	716	0	4	720
	FELTON TELEPHONE COMPANY INC.	10	467	78	14	7	51	68	685	685	0	19	704
	EAGLE VALLEY TELEPHONE COMPANY	11	459	64	9	6	37	81	656	656	0	22	678
	MANCHESTER-HARTLAND TELEPHONE CO.	9	448	69	22	0	12	53	604	604	0	1	605
	HILLS TELEPHONE CO. INC. - MN	10	338	97	27	33	22	58	575	575	0	0	575
	MINNESOTA LAKE TELEPHONE COMPANY	11	374	67	5	9	36	60	551	551	0	0	551
	ROTHSAY TELEPHONE COMPANY INC.	9	349	75	14	6	16	59	519	519	0	10	529
	SACRED HEART TEL. CO.	6	372	74	19	0	36	7	508	508	0	0	508
	DANUBE TELEPHONE COMPANY	6	360	53	11	6	26	2	458	458	0	0	458
	DELAVAN TELEPHONE COMPANY	12	222	41	10	5	9	45	332	332	0	1	333
	LISMORE COOPERATIVE TELEPHONE CO.	8	251	32	10	1	5	32	331	331	0	1	332
	GRANADA TEL. CO.	6	204	40	2	4	8	8	266	266	0	10	276
	CALLAWAY TELEPHONE COMPANY	8	157	47	10	1	28	27	270	270	0	2	272
	EASTON TELEPHONE COMPANY	12	151	47	10	2	20	42	272	272	0	0	272
	DUNNELL TELEPHONE COMPANY INC.	10	196	34	10	9	8	9	266	266	0	0	266
	CLEMENTS TELEPHONE COMPANY	6	72	20	2	1	4	94	193	193	0	0	193
	WOLVERTON TELEPHONE COMPANY	7	129	22	6	4	4	19	184	184	0	7	191
	NORTHERN TELEPHONE COMPANY OF MN	1	34	0	0	0	0	0	34	0	34	0	34
SUBTOTAL			1,598,428	540,412	158,102	72,140	78,893	283,611	2,729,586	2,714,514	15,072	101,110	2,830,696
MISSISSIPPI	SOUTH CENTRAL BELL-MISSISSIPPI	66	772,725	168,656	44,254	57,320	37,190	86,638	1,166,783	1,166,783	0	83,175	1,249,958
	CENTURY TELEPHONE OF NORTH MISSISSIPPI	17	8,347	1,866	473	758	639	3,326	15,429	15,429	0	682	16,111
	BAY SPRINGS TELEPHONE COMPANY INC.	1	11,404	0	0	0	0	0	11,404	0	11,404	0	11,404
	ALLTEL MISSISSIPPI, INC.	20	6,648	952	173	286	356	1,714	10,129	10,129	0	283	10,412
	FRANKLIN TELEPHONE COMPANY INC - MS	13	5,483	624	140	204	346	616	7,413	7,413	0	265	7,678
	FULTON TELEPHONE COMPANY INC.	11	5,612	530	248	131	101	590	7,212	1,600	5,612	106	7,318
	FRONTIER COMMUNICATIONS OF MISSISSIPPI	1	5,526	0	0	0	0	0	5,526	0	5,526	198	5,724
	DELTA TELEPHONE COMPANY INC.	14	2,755	412	88	121	133	415	3,924	3,924	0	113	4,037
	CALHOUN CITY TEL. COMPANY INC.	11	3,157	267	61	85	68	60	3,698	3,698	0	145	3,843
	SOUTHEAST MISSISSIPPI TELEPHONE COMPANY	11	2,541	148	151	68	388	105	3,401	3,401	0	0	3,401
	BRUCE TELEPHONE COMPANY - MS	8	2,101	429	105	38	100	101	2,874	2,874	0	183	3,057
	DECATUR TELEPHONE CO INC- MS	10	1,636	141	34	33	12	49	1,905	1,905	0	0	1,905
	SMITHVILLE TEL. CO.	10	909	43	21	35	8	19	1,035	1,035	0	0	1,035
	MOUND BAYOU TEL. & COMMUNICATIONS, INC.	10	580	39	63	4	34	234	954	374	580	75	1,029
	NOXAPATER TELEPHONE COMPANY	1	998	0	0	0	0	0	998	0	998	0	998
	MYRTLE TEL. CO.	1	863	0	0	0	0	0	863	0	863	0	863
	SLEDGE TEL. CO., INC.	8	342	62	11	19	20	71	525	525	0	0	525
	LAKESIDE TELEPHONE COMPANY, INC.	8	250	45	53	13	3	12	376	376	0	0	376
	GEORGETOWN TELE. CO., INC	1	298	0	0	0	0	0	298	0	298	0	298
SUBTOTAL			832,175	174,234	45,875	59,115	39,398	93,950	1,244,747	1,219,466	25,281	85,225	1,329,972
MISSOURI	SOUTHWESTERN BELL-MISSOURI	90	1,421,375	322,877	258,750	88,534	59,223	175,005	2,325,764	2,325,764	0	98,534	2,424,298
	UNITED TELEPHONE CO. OF MISSOURI	45	124,838	20,135	38,645	5,291	7,839	5,375	202,123	186,318	15,805	33,104	235,227
	CONTEL OF MO. INC. DBA GTE MISSOURI	45	145,408	21,273	11,415	7,153	8,663	21,521	215,433	199,581	15,852	3,664	219,097
	GTE NORTH INC. - MISSOURI	36	68,538	14,453	8,523	4,716	4,615	7,564	108,409	107,726	683	3,348	111,757
	CONTEL SYSTEMS MO DBA GTE SYSTEMS OF MO	28	33,953	4,652	2,166	1,339	2,830	5,457	50,397	48,010	2,387	750	51,147
	ALLTEL MISSOURI INC.	28	33,121	4,334	1,845	770	2,417	7,674	50,161	45,477	4,684	920	51,081
	GRAND RIVER MUTUAL TEL CORP - MO	11	12,198	499	496	139	171	111	13,611	8,208	5,403	332	13,943
	FIDELITY TELEPHONE COMPANY	11	8,569	1,487	867	437	682	359	12,401	12,401	0	30	12,431
	CHARITON VALLEY TELEPHONE CO.	10	4,209	444	329	79	278	2,397	7,736	7,736	0	68	7,804
	NORTHEAST MISSOURI RURAL TEL CO.	11	6,728	294	279	24	205	66	7,596	3,909	3,687	45	7,641

PUBLIC VERSION

Table 5: NUMBER OF LONG DISTANCE CARRIERS, LONG DISTANCE CARRIER'S PRESUBSCRIBED LINES AND EQUAL ACCESS LINES BY LOCAL EXCHANGE CARRIERS (AS OF DECEMBER 31, 1996)

MISSOURI CONT'D	CASS COUNTY TEL CO	12	6,096	412	283	55	83	51	6,980	2,790	4,190	12	6,992
	KINGDOM TELEPHONE COMPANY	12	3,765	340	141	55	121	125	4,547	4,547	0	109	4,656
	STEELVILLE TEL. EXCH. INC.	7	2,833	443	126	190	234	93	3,919	3,919	0	160	4,079
	MARK TWAIN RURAL TELEPHONE CO.	1	3,964	0	0	0	0	0	3,964	0	3,964	0	3,964
	THE KS STATE TEL. DBA GTE OF EASTERN MO	10	2,656	396	170	177	219	283	3,901	3,896	5	23	3,924
	CITIZENS TELEPHONE CO - MISSOURI	9	2,850	451	170	101	158	38	3,768	3,768	0	94	3,862
	MID-MISSOURI TELEPHONE CO.	8	2,445	445	151	89	337	82	3,549	3,549	0	68	3,617
	GREEN HILLS TELEPHONE CORP.	7	2,864	237	152	90	108	38	3,489	3,489	0	9	3,498
	BPS TEL CO	1	3,337	0	0	0	0	0	3,337	0	3,337	0	3,337
	MCDONALD COUNTY TELEPHONE CO.	9	2,323	250	99	36	305	61	3,074	3,074	0	79	3,153
	SENECA TEL. CO.	9	2,082	272	55	58	216	53	2,736	2,736	0	83	2,819
	GRANBY TEL CO - MISSOURI	7	2,110	262	56	79	115	33	2,655	2,655	0	39	2,694
	CRAW-KAN TELEPHONE COOP INC - MO	8	1,787	272	102	41	104	8	2,314	2,314	0	17	2,331
	BOURBEUSE TELEPHONE COMPANY	10	1,380	273	125	24	98	70	1,970	1,970	0	0	1,970
	OZARK TELEPHONE CO.	10	1,614	52	59	50	120	68	1,963	1,963	0	7	1,970
	GOODMAN TEL. CO.	9	1,203	184	60	25	154	28	1,654	1,654	0	52	1,706
	ROCK PORT TEL. CO.	7	1,486	30	74	18	12	8	1,628	1,628	0	30	1,658
	ELLINGTON TELEPHONE COMPANY	1	1,607	0	0	0	0	0	1,607	0	1,607	0	1,607
	KLM TEL. CO.	1	1,430	0	0	0	0	0	1,430	0	1,430	0	1,430
	LATHROP TELEPHONE COMPANY	9	1,038	149	76	3	24	16	1,306	1,306	0	5	1,311
	STOUTLAND TELEPHONE COMPANY	6	1,045	85	40	20	85	3	1,278	1,278	0	1	1,279
	LE-RU TELEPHONE COMPANY	9	923	129	67	32	88	15	1,254	1,254	0	7	1,261
	IAMO TELEPHONE COMPANY - MO	7	936	53	63	27	48	23	1,150	1,150	0	0	1,150
	OREGON FARMERS MUTUAL TEL. CO.	7	992	71	33	20	6	9	1,133	1,133	0	0	1,133
	MILLER TELEPHONE COMPANY - MO	7	830	89	34	32	34	14	1,033	1,033	0	13	1,046
	NEW LONDON TEL CO.	6	786	67	26	15	39	6	939	939	0	0	939
	ORCHARD FARM TELEPHONE COMPANY	8	604	72	19	9	27	19	750	750	0	0	750
	MOKAN DIAL, INC.- MO	9	568	31	69	12	25	29	734	734	0	6	740
	HOLWAY TELEPHONE COMPANY	6	454	22	53	3	19	12	563	563	0	0	563
	CHOCTAW TELEPHONE COMPANY	1	517	0	0	0	0	0	517	0	517	0	517
	NEW FLORENCE TELEPHONE CO.	7	372	36	13	1	4	5	431	431	0	0	431
	PEACE VALLEY TELEPHONE CO.	6	309	35	10	0	37	4	395	395	0	0	395
	ALMA TELEPHONE COMPANY	8	275	40	25	1	26	6	373	373	0	0	373
	FARBER TELEPHONE COMPANY	4	169	23	7	0	11	0	210	210	0	0	210
SUBTOTAL			1,016,587	395,669	325,673	109,742	89,782	226,729	3,064,182	3,000,631	63,551	141,609	3,205,791
MONTANA	MOUNTAIN BELL-MONTANA	51	205,045	44,099	22,886	9,459	16,190	36,858	334,537	334,537	0	12,659	347,196
	NORTH-WESTERN TELEPHONE SYSTEMS, INC.	14	34,463	4,227	3,130	1,312	2,069	6,721	52,822	52,822	0	1,949	54,771
	3-RIVERS TEL. COOPERATIVE INC.	11	12,284	1,091	600	124	579	1,021	15,699	15,699	0	476	16,175
	NEMONT TELEPHONE COOP - MONTANA	10	9,334	1,483	542	267	713	778	13,117	13,117	0	361	13,478
	MID-RIVERS TEL. COOPERATIVE INC.	10	7,053	1,102	381	324	731	576	10,167	10,167	0	107	10,274
	TRIANGLE TEL. COOPERATIVE ASSN. INC.	9	6,867	473	240	8	700	579	8,867	6,169	2,698	807	9,674
	CITIZENS TELECOMMUNICATIONS CO. OF MONT	20	4,573	519	300	205	509	1,414	7,520	7,520	0	80	7,600
	CENTRAL MONTANA COMMUNICATIONS, INC.	9	5,531	491	283	19	466	636	7,396	5,521	1,875	165	7,561
	CLARK FORK TELECOMMUNICATIONS, INC.	6	4,443	724	482	146	0	1,482	7,277	7,277	0	0	7,277
	BLACKFOOT TEL. COOPERATIVE INC.	7	4,735	678	721	109	0	1,005	7,248	7,204	44	0	7,248
	PROJECT TEL. CO.	14	3,187	522	193	82	273	320	4,577	4,577	0	231	4,808
	RANGE TEL. COOP INC.-MT	12	2,691	386	267	102	190	254	3,890	3,890	0	1	3,891
	RONAN TEL. CO.	1	3,220	0	0	0	0	0	3,220	0	3,220	0	3,220
	INTERBEL TEL. COOPERATIVE INC.	1	1,431	0	0	0	0	0	1,431	0	1,431	0	1,431
	NORTHERN TEL. COOP INC - MT	1	1,385	0	0	0	0	0	1,385	0	1,385	0	1,385
	LINCOLN TEL. CO. INC.	7	674	79	54	1	100	84	992	992	0	0	992
	SOUTHERN MONTANA TEL. CO.	9	666	62	23	50	48	46	895	895	0	0	895
	HOT SPRINGS TEL. CO	1	688	0	0	0	0	0	688	0	688	0	688
SUBTOTAL			308,240	55,906	30,102	12,208	23,468	51,774	481,698	470,357	11,341	16,839	488,534
NEBRASKA	NORTHWESTERN BELL-NEBRASKA	57	315,319	81,299	35,201	25,274	14,541	29,758	501,392	501,392	0	27,313	528,705
	LINCOLN TEL. & TELE. CO.	23	119,844	28,910	12,303	7,820	7,057	82,773	258,707	258,707	0	4,488	263,195
	GTE NORTH INC. - NEBRASKA	30	31,440	7,203	2,955	2,579	3,178	2,616	49,971	49,918	53	1,152	51,123
	UNITED TELEPHONE CO. OF THE WEST-NE	23	14,475	3,042	6,181	959	1,149	781	26,587	25,579	1,008	948	27,535
	GREAT PLAINS COMMUNICATIONS, INC.	12	16,459	5,370	1,117	1,299	1,537	412	26,194	26,194	0	170	26,364
	BLAIR TELEPHONE COMPANY	11	5,048	788	283	188	286	260	6,853	6,853	0	158	7,011
	NEBRASKA CENTRAL TELEPHONE COMPANY	10	3,849	783	419	347	589	239	6,226	6,226	0	125	6,351
	HAMILTON TELEPHONE COMPANY	10	4,377	627	206	390	227	66	5,893	5,893	0	292	6,185
	SOUTHEAST NEBRASKA TEL. CO.	1	4,156	0	0	0	0	0	4,156	0	4,156	0	4,156

PUBLIC VERSION

Table 5: NUMBER OF LONG DISTANCE CARRIERS, LONG DISTANCE CARRIER'S PRESUBSCRIBED LINES AND EQUAL ACCESS LINES BY LOCAL EXCHANGE CARRIERS (AS OF DECEMBER 31, 1996)

NEBRASKA CONT'D	NORTHEAST NEBRASKA TELEPHONE COMPANY	1	4,017	0	0	0	0	0	4,017	0	4,017	0	4,017
	CONSOLIDATED TELEPHONE COMPANY- NE	1	2,936	0	0	0	0	0	2,936	0	2,936	0	2,936
	COZAD TELEPHONE COMPANY	9	1,880	389	102	114	121	129	2,735	2,735	0	198	2,933
	EASTERN NEBRASKA TELEPHONE COMPANY	8	2,206	200	71	80	142	33	2,732	1,332	1,400	33	2,765
	GLENWOOD TELEPHONE MEMBERSHIP CORP.	8	2,069	92	128	45	118	285	2,737	2,737	0	0	2,737
	PIERCE TELEPHONE COMPANY	8	1,453	166	56	58	79	23	1,835	1,835	0	10	1,845
	HARTINGTON TEL. CO.	1	1,626	0	0	0	0	0	1,626	0	1,626	0	1,626
	CONSOLIDATED TELCO, INC.	1	1,537	0	0	0	0	0	1,537	0	1,537	0	1,537
	CAMBRIDGE TELEPHONE COMPANY - NE	8	1,003	145	38	56	116	54	1,412	1,412	0	0	1,412
	DALTON TEL. CO.,INC.	1	1,330	0	0	0	0	0	1,330	0	1,330	0	1,330
	THREE RIVER TELCO	1	1,300	0	0	0	0	0	1,300	0	1,300	0	1,300
	BENKELMAN TELEPHONE COMPANY INC.	5	883	98	51	200	0	28	1,260	1,260	0	9	1,269
	HOOPER TELEPHONE COMPANY	1	1,199	0	0	0	0	0	1,199	0	1,199	0	1,199
	PLAINVIEW TELEPHONE COMPANY INC.	7	878	155	33	24	60	20	1,170	1,170	0	6	1,176
	ARAPAHOE TELEPHONE COMPANY	6	833	97	33	100	69	14	1,146	1,146	0	11	1,157
	STANTON TEL. CO.,INC.	10	773	129	53	104	39	47	1,145	1,145	0	9	1,154
	ARLINGTON TELEPHONE COMPANY	10	790	131	29	24	41	27	1,042	1,042	0	12	1,054
	ROCK COUNTY TEL. CO.	9	505	169	28	53	99	160	1,014	1,014	0	15	1,029
	CLARKS TELEPHONE COMPANY	7	805	87	45	35	46	6	1,024	1,024	0	4	1,028
	HENDERSON CO-OP TELEPHONE COMPANY	8	722	120	43	45	42	24	996	996	0	0	996
	DILLER TELEPHONE COMPANY	7	804	69	16	7	13	14	923	923	0	0	923
	HEMINGFORD COOP. TELEPHONE COMPANY	1	901	0	0	0	0	0	901	0	901	0	901
	CURTIS TELEPHONE COMPANY	7	478	128	43	53	82	28	812	812	0	0	812
	HERSHEY COOPERATIVE TELEPHONE CO	1	784	0	0	0	0	0	784	0	784	0	784
	HOME TEL. CO. OF NE	7	429	105	52	34	81	28	729	729	0	29	758
	WAUNETA TEL. CO.	5	484	66	33	60	0	39	682	682	0	4	686
	K & M TELEPHONE COMPANY INC.	8	428	95	34	16	47	7	627	627	0	15	642
	KEYSTONE-ARTHUR TELEPHONE COMPANY	6	472	63	26	28	39	5	633	633	0	3	636
	PETERSBURG TELEPHONE COMPANY	8	353	34	16	18	38	7	466	466	0	4	470
	EUSTIS TELEPHONE EXCHANGE INC.	8	226	64	13	68	55	16	442	442	0	15	457
	HARTMAN TELEPHONE EXCHANGES INC.	7	347	38	12	27	11	6	441	441	0	0	441
	ELSIE MUTUAL TELEPHONE COMPANY	6	148	29	17	19	10	1	224	224	0	1	225
	SODTOWN TEL. CO.	1	87	0	0	0	0	0	87	0	87	0	87
SUBTOTAL			549,653	130,691	59,637	40,124	29,912	117,906	927,923	905,589	22,334	35,024	962,947
NEVADA	CENTRAL TELEPHONE COMPANY - NEVADA	52	390,831	94,861	118,455	23,902	21,361	54,114	703,524	703,524	0	31,289	734,813
	NEVADA BELL	33	188,824	39,918	34,284	6,674	9,859	15,018	294,577	294,577	0	16,967	311,544
	CONTEL OF CALIFORNIA - NEVADA	18	18,732	2,742	2,158	729	1,281	2,461	28,103	27,991	112	791	28,894
	CITIZENS-NV-NORTH	12	13,515	2,782	1,639	321	775	2,419	21,451	21,451	0	215	21,666
	CHURCHILL CO. TEL. & TEL. SYSTEM	12	7,221	1,229	1,119	204	724	874	11,371	11,371	0	517	11,888
	RIO VIRGIN TELEPHONE COMPANY	13	2,819	377	441	140	207	801	4,785	4,785	0	62	4,847
	MOAPA VALLEY TELEPHONE COMPANY	12	2,120	401	318	57	181	129	3,206	3,206	0	74	3,280
	CITIZENS-NV-SOUTH	11	1,608	331	195	38	92	286	2,550	2,550	0	26	2,576
	LINCOLN COUNTY TELEPHONE SYSTEM INC.	1	2,098	0	0	0	0	0	2,098	0	2,098	0	2,098
	HUMBOLDT TELEPHONE COMPANY	8	558	60	31	6	16	29	700	593	107	0	700
	FILER MUTUAL TELEPHONE COMPANY - NV	8	421	57	32	13	51	38	612	612	0	23	635
	RURAL TELEPHONE COMPANY - NV	1	610	0	0	0	0	0	610	0	610	0	610
	GEM STATE UTILITIES CORP-NV	1	419	0	0	0	0	0	419	0	419	8	427
	BEEHIVE TELEPHONE COMPANY, INC., NV	1	98	0	0	0	0	0	98	0	98	0	98
SUBTOTAL			629,874	142,758	158,672	32,084	34,547	76,169	1,074,104	1,070,660	3,444	49,972	1,124,076
NEW HAMPSHIRE	NEW ENGLAND TEL.-NH	65	500,905	80,736	58,964	12,671	6,346	47,410	707,034	707,034	0	13,147	720,181
	MCTA, INC.	13	8,000	1,167	737	105	111	409	10,529	10,529	0	340	10,869
	GRANITE STATE TEL., INC.	12	4,905	810	481	97	98	2,450	8,841	8,841	0	126	8,967
	MERRIMACK COUNTY TEL. CO.	11	5,397	786	312	61	68	339	6,963	6,963	0	194	7,157
	UNION TEL. CO.	11	5,422	636	266	48	60	154	6,586	6,586	0	94	6,680
	KEARSARGE TEL. CO.	12	4,893	613	406	63	59	277	6,331	6,331	0	154	6,485
	WILTON TEL. CO. - NH	1	2,741	0	0	0	0	0	2,741	0	2,741	0	2,741
	CHICHESTER TEL. CO.	9	1,187	113	61	30	15	25	1,431	1,431	0	51	1,482
	DUNBARTON TEL. CO.	8	981	222	72	4	15	51	1,345	1,345	0	6	1,351
	MERIDEN TEL. CO.	8	405	44	46	10	2	12	519	519	0	4	523
	BRETTON WOODS TEL. CO.	8	221	35	49	1	3	16	325	325	0	35	360
	DIXVILLE TEL. CO.	1	118	0	0	0	0	0	118	0	118	0	118
SUBTOTAL			535,175	85,104	61,304	13,110	6,777	51,143	752,703	749,904	2,859	14,151	766,914

PUBLIC VERSION

Table 5: NUMBER OF LONG DISTANCE CARRIERS, LONG DISTANCE CARRIER'S PRESUBSCRIBED LINES AND EQUAL ACCESS LINES BY LOCAL EXCHANGE CARRIERS (AS OF DECEMBER 31, 1996)

NEW JERSEY	NEW JERSEY BELL	113	3,973,684	807,113	280,063	113,425	53,392	359,421	5,587,098	5,587,098	0	140,368	5,727,466
	UNITED TEL. CO. OF NJ, INC.	46	133,742	20,568	15,285	3,373	2,176	5,560	180,704	180,704	0	4,080	184,784
	WARWICK VALLEY TEL. CO.-NJ	13	4,630	1,219	387	181	130	2,149	8,696	8,696	0	59	8,755
SUBTOTAL			4,112,056	828,900	295,735	116,979	55,698	367,130	5,776,498	5,776,498	0	144,507	5,921,005
NEW MEXICO	MOUNTAIN BELL-NEW MEXICO	66	408,074	118,538	56,059	32,572	25,602	53,004	693,849	693,849	0	72,292	766,141
	GTE SOUTHWEST INC. - NEW MEXICO	32	24,190	3,698	1,929	985	2,103	6,560	39,465	39,328	137	2,860	42,325
	CONTEL WEST, INC. DBA GTE OF WEST-NM	38	22,648	5,245	2,059	1,492	2,188	5,174	38,806	38,686	120	778	39,584
	E.N.M.R. TEL COOP. INC.-NM	12	7,949	476	362	114	0	2,176	11,077	11,077	0	0	11,077
	WESTERN NEW MEXICO TEL. CO., INC.	1	5,708	0	0	0	0	0	5,708	0	5,708	0	5,708
	UNIVERSAL TEL CO OF SOUTHWEST- NM	11	3,691	295	107	88	125	506	5,012	1,993	3,019	63	5,075
	NAVAJO COMMUNICATIONS CO INC-NM	9	1,928	1,140	921	40	85	113	4,227	4,227	0	540	4,767
	TULAROSA BASIN TEL.	22	2,724	515	227	116	358	178	4,118	4,118	0	231	4,349
	PENASCO VALLEY TEL. COOPERATIVE INC.	1	2,716	0	0	0	0	0	2,716	0	2,716	0	2,716
	LEACO RURAL TEL. COOPERATIVE INC.	19	1,601	202	130	88	173	71	2,265	2,265	0	358	2,623
	ROOSEVELT COUNTY RURAL TEL. COOP.,INC.	15	1,715	231	87	59	23	202	2,317	2,317	0	0	2,317
	LA JICARITA RURAL TEL. COOP. INC.	6	1,490	358	113	18	64	5	2,048	2,048	0	126	2,174
	VALLEY TELEPHONE COOPERATIVE INC-NM	14	1,045	183	100	10	108	62	1,508	1,508	0	12	1,520
	BACA VALLEY TEL. CO.	7	538	86	22	6	39	5	696	696	0	0	696
	DELL TELEPHONE CO-OP. INC.-NM	5	266	34	23	4	27	0	354	354	0	4	358
SUBTOTAL			486,483	131,001	62,139	35,592	30,895	68,056	814,166	802,466	11,700	77,264	891,430
NEW YORK	NEW YORK TELEPHONE	128	6,823,594	1,503,506	991,324	207,762	93,586	753,423	10,373,195	10,373,195	0	742,766	11,115,961
	FRONTIER CORPORATION	26	240,102	67,461	25,438	5,297	3,293	189,970	531,561	531,561	0	3,153	534,714
	CITIZENS TELECOMMUNICATIONS COMPANY OF NY	44	133,987	22,105	7,555	2,228	3,997	79,909	249,781	249,781	0	1,014	250,795
	FRONTIER COMMUNICATIONS OF NEW YORK, INC	20	23,561	8,098	2,785	1,108	1,031	26,849	63,432	63,432	0	581	64,013
	ALLTEL NEW YORK INC.- FULTON	20	30,132	4,622	1,690	963	1,001	6,208	44,616	44,616	0	1,640	46,256
	ALLTEL NEW YORK INC. - JAMESTOWN	20	30,311	5,479	2,140	598	0	6,073	44,601	44,601	0	1,235	45,836
	TACONIC TEL. CORP.	13	17,476	3,705	1,399	311	299	1,126	24,316	24,316	0	876	25,192
	CITIZENS TELECOM CO OF NY - WESTERN COUNTIES	25	14,740	2,011	730	294	435	6,413	24,623	24,623	0	32	24,655
	OGDEN TELEPHONE COMPANY - NY	17	11,256	2,882	991	625	337	5,188	21,279	21,279	0	18	21,297
	FRONTIER COMMUNICATIONS OF SYLVAN LAKE	14	5,016	2,339	620	253	209	7,824	16,263	16,263	0	145	16,408
	WARWICK VALLEY TEL. CO.-NY	12	6,047	1,755	858	232	273	5,583	14,748	14,748	0	133	14,881
	CITIZENS TELECOMMUN CO OF NY - RED HOOK	21	7,784	1,573	646	257	165	4,096	14,521	14,521	0	55	14,576
	CHAUTAUQUA & ERIE TEL. CORP.	9	3,048	1,054	291	128	203	5,939	10,673	10,673	0	162	10,835
	DUNKIRK AND FREDONIA TEL. CO.	13	7,435	857	374	103	208	385	9,362	9,362	0	403	9,765
	FRONTIER COMMUNICATIONS OF SENECA GORHAM	10	2,542	1,163	322	103	118	5,123	9,371	9,371	0	60	9,431
	DEPOSIT TELEPHONE CO. INC.	16	6,182	1,171	396	181	140	360	8,430	8,430	0	352	8,782
	STATE TEL. CO.	11	5,590	992	380	106	130	352	7,550	7,550	0	504	8,054
	EMPIRE TELEPHONE CORP - NEW YORK	13	5,658	880	313	89	184	351	7,484	7,484	0	126	7,610
	FRONTIER COMMUNICATIONS OF AUSABLE VALLEY	12	1,978	661	158	63	71	3,748	6,679	6,679	0	25	6,704
	TRUMANSBURG HOME TELEPHONE COMPANY	10	5,062	744	263	69	153	175	6,466	6,466	0	55	6,521
	MIDDLEBURGH TELEPHONE CO.	12	4,722	741	228	48	94	241	6,074	6,074	0	71	6,145
	TOWNSHIP TELEPHONE COMPANY INC.	11	4,947	552	177	37	131	151	5,995	3,743	2,252	65	6,060
	BERKSHIRE TEL. CORP.	8	4,380	775	276	44	98	175	5,748	5,748	0	58	5,806
	CHAMPLAIN TEL. CO.	6	4,136	833	305	32	0	147	5,453	5,453	0	55	5,508
	DELHI TELEPHONE COMPANY	11	2,903	624	258	47	56	276	4,164	4,164	0	681	4,845
	ONTARIO TEL. CO., INC.	10	3,368	494	152	72	42	454	4,582	4,582	0	117	4,699
	MARGARETVILLE TEL. CO.,INC.	11	3,054	413	176	18	65	94	3,820	3,820	0	0	3,820
	CHAZY & WESTPORT TEL. CORP.	9	2,951	299	130	30	14	250	3,674	3,674	0	49	3,723
	ONEIDA COUNTY RURAL TEL. CO.	8	1,733	471	115	57	65	886	3,327	3,327	0	74	3,401
	NEWPORT TELEPHONE CO. INC.	12	2,580	475	119	52	44	109	3,379	3,315	64	0	3,379
	PORT BYRON TELEPHONE COMPANY	8	2,707	272	64	30	34	116	3,313	3,313	0	47	3,360
	ARMSTRONG TELEPHONE COMPANY - NY	10	2,559	335	86	36	127	61	3,204	3,204	0	80	3,284
	ALLTEL NY INC. - RED JACKET	9	1,777	263	48	15	32	403	2,538	2,538	0	95	2,633
	VERNON TELEPHONE COMPANY INC.	1	2,569	0	0	0	0	0	2,569	0	2,569	0	2,569
	GERMANTOWN TELEPHONE CO INC	10	1,940	319	98	25	38	126	2,546	2,546	0	17	2,563
	NICHOLVILLE TEL. CO.,INC.	7	1,841	184	94	1	25	187	2,332	2,332	0	75	2,407
	EDWARDS TELEPHONE CO. INC.	8	1,763	182	64	12	19	28	2,068	2,068	0	3	2,071
	HANCOCK TELEPHONE COMPANY - NY	8	1,376	150	62	18	0	109	1,715	1,715	0	32	1,747
	CITIZENS TEL. CO. OF HAMMOND, NY	1	1,697	0	0	0	0	0	1,697	0	1,697	0	1,697
	CASSADAGA TEL. CORP.	8	948	219	53	17	57	49	1,343	1,343	0	75	1,418
	PATTERSONVILLE TEL CO- NEW YORK	9	963	193	110	23	21	35	1,345	1,345	0	30	1,375
	CROWN POINT TELEPHONE CORPORATION	9	748	87	23	10	9	29	906	906	0	42	948
	THE FISHERS ISLAND TEL. CO.	1	915	0	0	0	0	0	915	0	915	0	915

PUBLIC VERSION

Table 5: NUMBER OF LONG DISTANCE CARRIERS, LONG DISTANCE CARRIER'S PRESUBSCRIBED LINES AND EQUAL ACCESS LINES BY LOCAL EXCHANGE CARRIERS (AS OF DECEMBER 31, 1996)

NEW YORK CONT'D	ORISKANY FALLS TELEPHONE CORP.	1	721	0	0	0	0	0	721	0	721	0	721
SUBTOTAL			7,438,891	1,640,958	1,041,311	221,394	106,804	1,113,021	11,562,379	11,554,161	8,218	755,001	12,317,380
NORTH CAROLINA	SOUTHERN BELL-NORTH CAROLINA	73	1,392,036	279,772	112,268	70,200	78,990	133,623	2,066,889	2,066,889	0	77,659	2,144,548
	CAROLINA TELEPHONE & TEL. CO.	40	572,331	91,496	251,711	13,241	42,510	51,498	1,022,787	1,022,787	0	42,887	1,065,674
	CENTRAL TEL. CO. - NORTH CAROLINA	32	172,137	22,365	24,918	4,193	9,741	11,454	244,808	244,808	0	6,622	251,430
	ALLTEL CAROLINA, INC.-NORTH	29	110,709	17,558	8,585	3,140	7,496	24,358	171,846	171,846	0	6,190	178,036
	GTE SOUTH INC. - NORTH CAROLINA	39	89,474	21,631	11,424	4,126	5,916	13,584	146,155	146,080	75	15,049	161,204
	CONTEL OF NC, INC. DBA GTE NORTH CAROLINA	31	77,725	10,334	3,983	2,640	5,025	9,196	108,903	108,894	9	3,936	112,839
	NORTH STATE TELEPHONE CO. - NC	15	77,928	12,683	4,134	2,257	2,047	4,760	103,809	103,809	0	5,939	109,748
	THE CONCORD TELEPHONE COMPANY	10	19,110	5,595	2,149	1,262	2,212	65,956	96,284	96,284	0	2,268	98,552
	LEXINGTON TELEPHONE COMPANY	16	15,316	3,521	1,135	350	1,217	9,192	30,731	30,731	0	190	30,921
	ATLANTIC TELEPHONE MEMB. CORP.	14	21,997	3,189	1,354	314	1,216	1,816	29,886	29,886	0	406	30,292
	SKYLINE TEL. MEMB. CORP.	15	22,751	2,402	1,293	412	1,500	748	29,106	29,166	0	739	29,905
	YADKIN VALLEY TEL. MEMB. CORP.	9	20,825	1,750	918	162	1,131	402	25,188	25,188	0	740	25,928
	CITIZENS TELEPHONE COMPANY - NC	13	12,698	1,935	747	408	449	791	17,028	17,028	0	96	17,124
	STAR TEL. MEMB. CORP.	12	4,641	564	406	73	532	9,766	15,982	15,982	0	731	16,713
	SURRY TEL. MEMB. CORP.	11	10,513	930	308	150	478	383	12,762	12,762	0	0	12,762
	WILKES TELEPHONE MEMB. CORP.	11	7,630	751	327	128	357	263	9,456	9,456	0	199	9,655
	MEBTEL, INC.	12	5,954	1,240	476	173	217	719	8,779	8,779	0	47	8,826
	RANDOLPH TELEPHONE MEMB. CORP.	1	8,647	0	0	0	0	0	8,647	0	8,647	0	8,647
	RANDOLPH TEL. CO.	11	2,842	463	166	63	146	179	3,859	3,859	0	123	3,982
	TRI-COUNTY TEL. MEMB. CORP.-NC	1	3,117	0	0	0	0	0	3,117	0	3,117	0	3,117
	PIEDMONT TELEPHONE MEMB. CORP.	8	2,176	175	100	29	0	391	2,871	2,871	0	77	2,948
	ELLERBE TELEPHONE COMPANY	11	1,556	157	40	35	98	80	1,966	1,966	0	93	2,059
	PINEVILLE TELEPHONE CO.	10	1,015	310	105	48	96	122	1,696	1,696	0	112	1,808
	SALUDA MOUNTAIN TEL. CO.	9	1,207	133	79	25	79	29	1,552	1,552	0	2	1,554
	BARNARDSVILLE TELEPHONE COMPANY	1	1,281	0	0	0	0	0	1,281	0	1,281	0	1,281
	SERVICE TELEPHONE COMPANY	9	974	86	25	3	24	56	1,168	1,168	0	1	1,169
SUBTOTAL			2,656,590	479,040	426,651	103,432	161,537	339,366	4,166,616	4,153,487	13,129	164,106	4,330,722
NORTH DAKOTA	NORTHWESTERN BELL-NORTH DAKOTA	49	125,055	38,594	10,915	15,175	7,796	10,160	207,695	207,695	0	8,940	216,635
	SRT COMMUNICATIONS, INC.	12	7,255	4,054	1,240	2,173	813	13,130	28,665	28,665	0	1,583	30,248
	NORTH DAKOTA TELEPHONE COMPANY	22	12,948	3,215	489	1,084	535	729	19,000	16,590	2,410	271	19,271
	WEST RIVER TELECOMMUNICATIONS COOPERATIVE	17	6,578	2,087	439	451	868	5,138	15,561	15,561	0	409	15,970
	SOURIS RIVER TELECOMMUNICATIONS COOP.	11	3,535	1,563	665	139	339	5,311	11,552	11,552	0	277	11,829
	POLAR COMMUNICATIONS MUTUAL AID CORP.	9	6,416	1,135	283	441	430	131	8,836	8,836	0	102	8,938
	DICKEY RURAL TEL COOP.	19	6,262	1,085	199	307	449	215	8,517	5,956	2,561	180	8,697
	CONSOLIDATED TELEPHONE COOPERATIVE	15	6,738	765	194	172	254	255	8,378	4,655	3,723	135	8,513
	RESERVATION TELEPHONE COOPERATIVE	13	6,387	308	65	74	167	76	7,077	2,015	5,062	407	7,484
	BEK COMMUNICATIONS COOPERATIVE	16	4,468	1,342	268	443	414	150	7,085	7,085	0	159	7,244
	UNITED TELEPHONE MUTUAL AID CORP.	8	4,854	1,028	424	283	535	40	7,174	7,174	0	14	7,188
	NORTHWEST COMMUNICATIONS COOPERATIVE	11	4,607	310	62	63	95	87	5,224	1,898	3,326	102	5,326
	DAKOTA CENTRAL TELECOMMUNICATIONS COOP.	14	4,130	548	113	94	98	59	5,042	2,838	2,204	104	5,146
	RED RIVER RURAL TEL. ASSN.	12	2,445	549	111	69	162	245	3,581	3,581	0	74	3,655
	INTER-COMMUNITY TELEPHONE COMPANY	10	2,098	250	57	26	65	26	2,522	1,304	1,218	23	2,545
	GRIGGS COUNTY TELEPHONE COMPANY	13	1,609	258	84	123	78	57	2,209	2,209	0	15	2,224
	MIDSTATE TELEPHONE COMPANY	1	1,592	0	0	0	0	0	1,592	0	1,592	0	1,592
	POLAR COMMUNICATIONS, INC.	11	1,086	224	72	34	107	49	1,572	1,572	0	10	1,582
	YORK TELEPHONE COMPANY	12	779	169	36	31	71	73	1,159	1,119	40	16	1,175
	MOORE & LIBERTY TELEPHONE COMPANY	9	922	34	8	0	5	5	974	190	784	4	978
	WOLVERTON TEL. CO.	8	230	44	12	3	16	20	325	325	0	4	329
	NEMONT TELEPHONE COOPERATIVE - ND	6	217	19	10	5	10	2	263	263	0	3	266
	NOONAN FARMERS TELEPHONE COMPANY	7	141	29	5	6	10	12	203	203	0	3	206
	ABSARAKA COOP TELEPHONE CO	1	38	0	0	0	0	0	38	0	38	0	38
SUBTOTAL			210,400	57,610	15,751	21,196	13,317	35,970	354,244	331,286	22,958	12,835	367,079
OHIO	OHIO BELL TEL. CO.	75	2,329,538	561,353	237,601	128,583	71,076	405,351	3,733,502	3,733,502	0	133,220	3,866,722
	GTE NORTH INC. - OHIO	68	519,422	95,905	37,974	14,233	24,309	61,407	753,250	700,660	52,590	32,411	785,661
	CINCINNATI BELL-OHIO	56	478,894	94,851	43,472	13,050	17,275	79,505	727,947	727,947	0	24,353	752,300
	UNITED TELEPHONE CO. OF OHIO	49	321,311	61,762	112,499	8,716	17,653	38,560	560,501	533,978	26,523	9,707	570,208
	WESTERN RESERVE TELEPHONE COMPANY	31	93,882	23,230	10,599	3,182	3,976	22,878	157,756	157,756	0	5,040	162,796
	ALLTEL OHIO, INC.	34	75,597	12,605	6,488	1,991	2,967	20,130	119,778	119,778	0	4,220	123,998
	CENTURY TELEPHONE COMPANY OF OHIO	26	41,103	8,125	3,437	996	2,127	15,033	71,421	71,421	0	2,795	74,216
	CHILLICOTHE TELEPHONE COMPANY	15	19,853	4,803	1,477	528	836	4,296	31,793	31,793	0	2,632	34,425

PUBLIC VERSION

Table 5: NUMBER OF LONG DISTANCE CARRIERS, LONG DISTANCE CARRIER'S PRESUBSCRIBED LINES AND EQUAL ACCESS LINES BY LOCAL EXCHANGE CARRIERS (AS OF DECEMBER 31, 1996)

OHIO CONT'D	THE CHAMPAIGN TELEPHONE COMPANY	14	6,820	1,520	752	103	598	916	10,818	10,818	0	10	10,828
	TELEPHONE SERVICE COMPANY	14	5,803	1,109	627	106	465	1,111	9,218	9,218	0	0	9,218
	CONNEAUT TELEPHONE COMPANY	11	5,339	916	413	80	235	394	7,383	7,215	168	179	7,562
	ORWELL TELEPHONE COMPANY	12	4,209	723	321	42	336	525	6,156	6,156	0	116	6,272
	GERMANTOWN INDEPENDENT TEL. CO.	11	2,849	389	157	101	164	215	3,895	3,895	0	47	3,942
	DOYLESTOWN TELEPHONE COMPANY	11	2,455	491	170	52	121	259	3,548	3,548	0	31	3,579
	MINFORD TELEPHONE COMPANY INC.	9	2,224	216	77	11	97	91	2,716	2,716	0	0	2,716
	LITTLE MIAMI COMMUNICATIONS CORPORATION	11	1,945	279	85	31	165	93	2,598	2,598	0	0	2,598
	CONTINENTAL TELEPHONE CO OF OHIO	11	1,672	254	72	11	131	79	2,219	2,219	0	0	2,219
	SYCAMORE TELEPHONE COMPANY	10	1,475	233	76	11	66	113	1,974	1,974	0	0	1,974
	COLUMBUS GROVE TELEPHONE COMPANY	11	1,182	192	54	8	92	93	1,621	1,621	0	12	1,633
	KALIDA TELEPHONE CO. INC.	10	928	158	80	35	85	62	1,348	1,348	0	69	1,417
	THE OTTOVILLE MUTUAL TEL. COMPANY	7	997	38	61	0	34	135	1,265	1,265	0	0	1,265
	THE ARTHUR MUTUAL TELEPHONE COMPANY	8	949	115	50	12	64	30	1,220	1,220	0	35	1,255
	SHERWOOD MUTUAL TEL. ASSOC.	9	972	79	35	24	29	18	1,157	1,157	0	39	1,196
	OAKWOOD TELEPHONE COMPANY	9	807	120	38	12	58	102	1,137	1,137	0	0	1,137
	THE NEW KNOXVILLE TELEPHONE COMPANY	10	682	135	38	21	43	189	1,108	1,108	0	0	1,108
	BENTON RIDGE TELEPHONE COMPANY	8	1,015	45	8	4	4	16	1,092	487	605	0	1,092
	AYERSVILLE TELEPHONE COMPANY	8	797	110	49	17	62	42	1,077	1,077	0	0	1,077
	THE NOVA TELEPHONE COMPANY	10	785	103	35	27	26	55	1,032	1,032	0	8	1,040
	THE GLANDORF TELEPHONE CO. INC.	7	655	81	31	4	40	28	839	839	0	0	839
	BUCKLAND MUTUAL TELEPHONE COMPANY	11	588	92	30	5	28	95	838	838	0	0	838
	ARCADIA TEL. CO.	9	655	61	21	11	17	23	788	788	0	0	788
	WABASH MUTUAL TELEPHONE COMPANY	8	574	91	15	9	15	11	715	715	0	58	773
	FORT JENNINGS TELEPHONE COMPANY	9	567	96	41	11	17	35	767	767	0	2	769
	RIDGEVILLE TELEPHONE COMPANY	7	497	98	30	9	0	103	737	737	0	0	737
	MCCLURE TELEPHONE COMPANY	9	533	88	24	15	17	35	712	712	0	5	717
	VANLUE TELEPHONE COMPANY	6	501	82	47	13	46	21	710	710	0	2	712
	MIDDLE POINT HOME TELEPHONE COMPANY	7	510	72	39	6	27	36	690	660	30	0	690
	BASCOM MUTUAL TELEPHONE COMPANY	1	606	0	0	0	0	0	606	0	606	0	606
	FRONITER COMMUNICATIONS OF OHIO, INC.	7	448	52	11	8	40	34	593	593	0	0	593
	THE FARMERS MUTUAL TEL. CO.-OKOLONA, OH	8	336	43	23	0	8	13	423	423	0	0	423
	PATTERSONVILLE TELEPHONE CO- OH	1	370	0	0	0	0	0	370	0	370	0	370
	VAUGHNSVILLE TELEPHONE COMPANY INC.	0	233	36	14	2	18	19	322	322	0	6	328
SUBTOTAL			3,930,587	870,857	457,072	172,986	143,367	652,751	6,227,640	6,146,748	80,892	214,997	6,442,637
OKLAHOMA	SOUTHWESTERN BELL-OKLAHOMA	88	949,205	195,432	106,065	59,218	62,422	138,553	1,510,895	1,503,575	7,320	52,446	1,563,341
	GTE SOUTHWEST INC. - OKLAHOMA	47	61,756	14,814	6,660	4,382	6,098	6,693	100,403	100,363	40	4,770	105,173
	PIONEER TEL. COOP. INC.	33	20,575	2,780	857	936	2,361	18,619	46,157	46,157	0	1,126	47,283
	PANHANDLE TELEPHONE COOPERATIVE INC.	25	11,148	1,723	600	673	849	3,038	18,031	18,031	0	818	18,849
	OKLAHOMA COMMUNICATION SYSTEMS INC.	17	14,579	1,249	420	239	690	473	17,650	17,650	0	51	17,701
	OKLAHOMA ALLTEL. INC	18	11,297	1,481	444	270	1,407	641	15,540	15,540	0	455	15,995
	ALLTEL OKLAHOMA, INC.	24	10,967	1,251	427	173	846	645	14,309	13,024	1,285	321	14,630
	CROSS TELEPHONE CO.	15	6,557	560	149	102	629	851	8,857	8,857	0	269	9,126
	CHICKASAW TELEPHONE CO.	16	2,891	738	184	109	499	3,804	8,225	8,225	0	11	8,236
	BIXBY TELEPHONE CO.	14	4,282	895	343	239	436	1,299	7,494	7,494	0	276	7,770
	MCLOUD TELEPHONE CO.	12	4,874	521	184	143	239	1,584	7,545	7,545	0	125	7,670
	CIMARRON TEL. CO.	14	4,324	366	229	137	453	1,904	7,413	7,413	0	0	7,413
	SALINA-SPAVINAW TEL. CO.,INC.	11	5,027	619	154	162	617	243	6,822	6,822	0	237	7,059
	PINE TELEPHONE CO INC- OK	11	3,850	507	170	160	587	298	5,572	5,572	0	290	5,862
	CHEROKEE TELEPHONE CO.	11	3,628	375	140	60	288	248	4,739	4,739	0	145	4,884
	DOBSON TELEPHONE CO.	13	2,153	253	60	90	105	1,785	4,446	4,446	0	56	4,502
	GRAND TELEPHONE CO. INC.	12	2,635	360	139	114	290	172	3,710	3,710	0	118	3,828
	HINTON TELEPHONE CO.	1	3,426	0	0	0	0	0	3,426	0	3,426	0	3,426
	CHOUTEAU TELEPHONE CO.	12	2,512	224	71	112	185	112	3,216	3,216	0	68	3,284
	OKLAHOMA WESTERN TELEPHONE CO.	1	3,137	0	0	0	0	0	3,137	0	3,137	0	3,137
	CENTRAL OKLAHOMA TELEPHONE CO.	12	1,742	247	47	44	124	272	2,476	2,476	0	27	2,503
	POTTAWATOMIE TELEPHONE CO.	11	1,305	105	52	7	159	503	2,131	2,131	0	0	2,131
	VALLIANT TELEPHONE COMPANY	9	1,563	119	57	35	172	54	2,000	2,000	0	106	2,106
	TOTAH TELEPHONE CO. INC.	8	1,487	179	93	51	143	39	1,992	1,992	0	61	2,053
	OKLAHOMA TELEPHONE & TELEGRAPH INC.	11	867	161	26	2	116	767	1,939	1,939	0	51	1,990
	MID-AMERICA TEL.,INC.	12	1,216	140	75	16	147	114	1,708	1,708	0	0	1,708
	ATLAS TELEPHONE CO.	11	1,155	154	27	26	201	83	1,646	1,646	0	56	1,702
	CARNEGIE TELEPHONE CO.INC.	1	1,539	0	0	0	0	0	1,539	0	1,539	0	1,539
	BEGGS TELEPHONE COMPANY	1	1,504	0	0	0	0	0	1,504	0	1,504	0	1,504

PUBLIC VERSION

Table 5: NUMBER OF LONG DISTANCE CARRIERS, LONG DISTANCE CARRIER'S PRESUBSCRIBED LINES AND EQUAL ACCESS LINES BY LOCAL EXCHANGE CARRIERS (AS OF DECEMBER 31, 1996)

OKLAHOMA CONT'D	KANOKLA TELEPHONE ASSN.INC. - OK	1	1,341	0	0	0	0	0	1,341	0	1,341	0	1,341
	LAVACA TELEPHONE CO.- OK	11	957	104	23	8	177	32	1,301	1,301	0	20	1,321
	CANADIAN VALLEY TELEPHONE CO.	8	871	90	21	9	71	7	1,069	1,069	0	26	1,095
	SOUTHWEST OKLAHOMA TEL. CO.	9	740	71	23	4	75	16	929	929	0	16	945
	SHIDLER TEL. CO.	1	940	0	0	0	0	0	940	0	940	0	940
	MEDICINE PARK TELEPHONE CO.	7	538	67	32	2	31	11	681	681	0	40	721
	WYANDOTTE TELEPHONE COMPANY	8	537	63	15	4	29	26	674	674	0	0	674
	SANTA ROSA TELEPHONE COOP. INC.	10	529	40	14	3	54	25	665	665	0	0	665
	SOUTH CENTRAL TEL. ASSN., INC.-OK	9	225	31	6	109	5	17	393	393	0	9	402
	TERRAL TEL. CO.	6	207	31	13	8	48	3	310	310	0	8	318
SUBTOTAL			1,148,086	225,768	117,820	67,647	80,573	182,931	1,822,825	1,802,293	20,532	62,002	1,884,827
OREGON	PACIFIC NORTHWEST BELL-OREGON	77	751,897	147,662	111,913	69,825	31,111	105,690	1,218,098	1,218,098	0	99,054	1,317,152
	GTE NORTHWEST INC. - OREGON	60	264,211	42,507	35,340	14,172	13,448	29,343	399,021	398,957	64	21,557	420,578
	UNITED TELEPHONE CO OF THE NW - OR	32	44,625	5,468	10,662	2,416	2,452	2,673	68,296	68,296	0	1,157	69,453
	TELEPHONE UTILITIES OF OREGON INC.	31	50,221	4,939	3,244	2,512	1,765	2,224	64,905	64,905	0	3,769	68,674
	PIONEER TELEPHONE COOPERATIVE	12	10,892	1,157	1,053	218	494	335	14,159	14,159	0	24	14,183
	CITIZENS TELECOMMUNICATIONS COMPANY OF OR	18	7,779	1,004	868	607	587	1,322	12,167	12,167	0	1,212	13,379
	MALHEUR HOME TELEPHONE COMPANY	22	8,909	1,044	706	655	427	807	12,548	12,548	0	565	13,113
	CANBY TELEPHONE ASSOCIATION	16	5,455	851	601	348	374	2,582	10,211	10,211	0	53	10,264
	CASCADE UTILITIES INC.	13	7,524	485	626	105	294	244	9,278	9,232	46	42	9,320
	STAYTON COOP. TEL CO	10	4,591	700	374	314	181	162	6,322	6,322	0	23	6,345
	MOLALLA TELEPHONE COMPANY	18	3,761	553	350	177	234	430	5,505	5,505	0	162	5,667
	BEAVER CREEK COOPERATIVE TEL. CO.	10	3,418	321	275	36	226	44	4,320	4,320	0	120	4,440
	CLEAR CREEK MUTUAL TELEPHONE CO.	10	2,736	315	219	93	160	67	3,592	3,592	0	9	3,601
	NEHALEM TELEPHONE AND TELEGRAPH	10	2,166	241	199	60	90	37	2,793	2,793	0	64	2,857
	MT. ANGEL TELEPHONE COMPANY	10	1,343	176	80	77	53	112	1,841	1,841	0	14	1,855
	OREGON TELEPHONE CORPORATION	1	1,842	0	0	0	0	0	1,842	0	1,842	0	1,842
	SCIO MUTUAL TEL. ASSOCIATION	10	1,456	130	63	40	54	30	1,773	1,773	0	0	1,773
	PEOPLES TELEPHONE CO. - OR	9	1,309	56	57	16	19	13	1,470	1,470	0	21	1,491
	GERVAIS TELEPHONE COMPANY	11	937	96	59	0	27	31	1,150	1,150	0	56	1,206
	COLTON TELEPHONE COMPANY	9	928	71	66	19	46	39	1,169	1,169	0	28	1,197
	MONROE TELEPHONE COMPANY	12	723	48	29	18	28	33	879	879	0	17	896
	ROOME TELECOMMUNICATIONS INC.	7	507	91	107	0	23	64	792	792	0	15	807
	PINE TELEPHONE SYSTEM INC. - OR	1	765	0	0	0	0	0	765	0	765	0	765
	HOME TELEPHONE COMPANY	1	751	0	0	0	0	0	751	0	751	0	751
	OREGON-IDAHO UTILITIES, INC.	1	732	0	0	0	0	0	732	0	732	0	732
	MONITOR COOPERATIVE TELEPHONE CO	10	490	43	36	7	9	52	637	637	0	46	683
	ST. PAUL COOP. TEL. ASSN.	12	488	21	28	3	28	19	587	587	0	0	587
	NORTH STATE TELEPHONE COMPANY - OR	1	519	0	0	0	0	0	519	0	519	0	519
	EAGLE TELEPHONE SYSTEM INC.	1	399	0	0	0	0	0	399	0	399	0	399
	HELIX TELEPHONE COMPANY	1	278	0	0	0	0	0	278	0	278	0	278
	MIDVALE TEL. EXCH. INC. - OR	10	184	8	7	7	11	14	231	231	0	5	236
	TRANS-CASCADES TELEPHONE COMPANY	7	132	16	8	4	3	2	165	165	0	3	168
	ASOTIN TELEPHONE COMPANY - OREGON	7	102	2	5	0	6	4	119	119	0	0	119
SUBTOTAL			1,182,072	208,005	166,985	91,729	52,150	146,373	1,847,314	1,841,918	5,396	128,016	1,975,330
PENNSYLVANIA	BELL OF PENNSYLVANIA	112	3,701,302	831,480	324,381	95,058	75,354	472,962	5,500,537	5,500,537	0	433,200	5,933,737
	GTE NORTH INC. - PENNSYLVANIA	74	317,298	60,189	29,150	7,369	12,681	35,223	461,910	457,473	4,437	29,141	491,051
	UNITED TELEPHONE COMPANY OF PA	48	207,107	35,745	64,508	5,526	7,472	17,642	338,000	338,000	0	22,241	360,241
	C-TEC CORPORATION	34	107,559	27,711	9,071	2,879	5,284	81,057	233,561	233,561	0	5,605	239,166
	ALLTEL PENNSYLVANIA,INC.	40	142,488	20,567	7,170	1,968	4,210	31,209	207,612	195,152	12,460	6,141	213,753
	NORTH PITTSBURGH TEL. CO.	23	31,866	9,819	4,516	912	1,072	13,479	61,664	61,664	0	1,243	62,907
	CONTEL OF PA, INC. DBA GTE PENNSYLVANIA	46	39,342	5,897	3,066	927	1,171	5,068	55,471	55,429	42	1,129	56,600
	DENVER AND EPHRATA TEL. & TEL. CO.	18	24,180	5,076	2,394	1,422	1,763	16,988	51,823	51,823	0	434	52,257
	THE CONESTOGA TEL. AND TEL. CO.	17	34,753	5,480	2,353	347	6	2,790	45,729	45,729	0	1,013	46,742
	QUAKER STATE TELEPHONE COMPANY	34	30,443	3,690	1,754	550	610	2,390	39,547	38,317	1,230	971	40,518
	FRONTIER COMMUNICATIONS OF PENNSYLVANIA	14	7,191	2,755	1,541	602	1,001	12,211	25,301	25,301	0	35	25,336
	BUFFALO VALLEY TELEPHONE COMPANY	16	12,913	2,003	684	293	231	1,996	18,120	17,362	758	970	19,090
	PALMERTON TELEPHONE COMPANY	14	3,609	877	238	118	207	5,815	10,864	10,864	0	291	11,155
	THE NORTH EASTERN PA. TEL. CO.	9	4,631	1,109	325	6	329	4,729	11,129	11,129	0	0	11,129
	LAUREL HIGHLAND TELEPHONE COMPANY	14	2,472	400	222	23	140	1,917	5,174	5,174	0	346	5,520
	CITIZENS TEL. CO. OF KECKSBURG	11	3,641	729	185	45	109	296	5,005	5,005	0	131	5,136
	NORTH PENN TELEPHONE COMPANY	8	3,402	456	145	86	196	145	4,430	4,430	0	209	4,639
	FRONTIER COMMUNICATIONS OF BREEZEWOOD	8	1,407	391	133	24	141	1,858	3,954	3,954	0	90	4,044

PUBLIC VERSION

Table 5: NUMBER OF LONG DISTANCE CARRIERS, LONG DISTANCE CARRIER'S PRESUBSCRIBED LINES AND EQUAL ACCESS LINES BY LOCAL EXCHANGE CARRIERS (AS OF DECEMBER 31, 1996)

PENNSYLVANIA CONT'D	MAHANOY & MAHANTONGO TEL. CO.	12	3,009	299	98	35	79	362	3,882	3,882	0	24	3,906
	IRONTON TELEPHONE COMPANY	11	2,322	486	151	27	39	744	3,779	3,755	24	104	3,883
	FRONTIER COMMUNICATIONS OF CANTON, INC.	11	934	350	81	51	134	2,140	3,690	3,690	0	0	3,690
	TUOLUMNE TEL. CO. DBA ALLTEL PENNSYLVANIA	10	2,567	464	137	23	186	161	3,538	3,538	0	76	3,614
	THE BENTLEYVILLE TEL. CO.	12	2,560	281	82	21	61	116	3,121	3,121	0	139	3,260
	LACKAWAXEN TELEPHONE COMPANY	1	3,197	0	0	0	0	0	3,197	0	3,197	0	3,197
	SOUTH CANAAN TEL. CO.	1	2,645	0	0	0	0	0	2,645	0	2,645	0	2,645
	MARIANNA - SCENERY HILL TEL. CO.	10	1,670	515	124	2	117	53	2,481	2,481	0	163	2,644
	PYMATUNING IND. TELEPHONE COMPANY	13	1,386	269	167	26	33	200	2,081	2,081	0	195	2,276
	FRONTIER COMMUNICATIONS-OSWAYO RIVER	11	1,558	162	74	11	131	235	2,171	2,171	0	55	2,226
	ARMSTRONG TELEPHONE COMPANY - PA	13	1,044	278	83	24	45	74	1,548	1,548	0	46	1,594
	FRONTIER COMMUNICATIONS-LAKEWOOD, INC.	10	1,023	175	52	24	11	94	1,379	1,379	0	0	1,379
	HICKORY TELEPHONE COMPANY	12	759	64	47	17	39	333	1,259	1,259	0	0	1,259
	VENUS TELEPHONE CORPORATION	8	846	160	37	10	158	16	1,227	1,227	0	9	1,236
	PENNSYLVANIA TELEPHONE COMPANY	8	995	123	40	4	4	49	1,215	1,215	0	10	1,225
	SUGAR VALLEY TELEPHONE COMPANY	11	912	60	23	20	11	52	1,078	1,078	0	6	1,084
	YUKON-WALTZ TELEPHONE COMPANY	9	812	87	44	7	12	53	1,015	1,015	0	37	1,052
	ARMSTRONG TELEPHONE COMPANY NORTH	7	395	50	22	1	19	10	497	497	0	17	514
	WEST SIDE TELEPHONE COMPANY-PA	3	24	9	2	0	0	0	35	35	0	4	39
SUBTOTAL			4,704,262	1,018,326	453,100	118,458	113,056	712,467	7,119,669	7,094,676	24,793	504,075	7,623,744
RHODE ISLAND	NEW ENGLAND TEL.-RI	63	434,304	72,113	44,935	12,271	6,887	31,808	602,318	602,318	0	17,866	620,184
SUBTOTAL			434,304	72,113	44,935	12,271	6,887	31,808	602,318	602,318	0	17,866	620,184
SOUTH CAROLINA	SOUTHERN BELL-SOUTH CAROLINA	63	830,368	217,218	64,906	45,218	63,604	87,929	1,309,243	1,309,243	0	76,846	1,386,089
	GTE SOUTH INC. - SOUTH CAROLINA	39	93,834	19,088	6,474	4,542	7,867	16,710	148,515	148,478	37	15,501	164,016
	UNITED TELEPHONE CO. OF THE CAROLINAS	32	48,569	10,703	18,069	1,588	4,523	5,000	88,452	88,452	0	6,419	94,871
	HORRY TEL. COOP. INC.	22	22,500	5,701	2,218	776	1,729	31,070	63,994	63,994	0	1,698	65,692
	FARMERS TEL. COOP., INC-SC	17	12,719	3,856	1,603	552	3,976	23,409	46,125	46,125	0	3,091	49,216
	ALLTEL SOUTH CAROLINA, INC.	22	28,765	5,960	2,497	889	2,595	5,664	46,370	46,370	0	1,499	47,869
	ROCK HILL TEL. CO.	16	18,922	5,257	1,939	755	1,551	14,849	43,273	43,273	0	3,010	46,283
	HARGRAY TEL. CO., INC.	18	19,817	7,134	0	842	1,415	10,725	39,933	39,933	0	4,482	44,415
	LANCASTER TEL. CO.	16	9,519	1,704	421	185	467	8,881	21,267	21,267	0	606	21,873
	CONTEL OF SOUTH CAROLINA, INC. DBA GTE SC	23	12,701	2,700	1,148	370	1,373	1,511	19,803	19,798	5	783	20,586
	HOME TELEPHONE COMPANY INC - SC	13	11,499	2,651	839	312	1,383	2,686	19,370	19,370	0	0	19,370
	CHESTER TELEPHONE COMPANY- SC	11	3,236	1,137	372	108	389	9,768	15,010	14,974	36	721	15,731
	FORT MILL TELEPHONE COMPANY	17	6,006	1,672	777	350	513	4,977	14,295	14,295	0	281	14,576
	POND BRANCH TEL. CO., INC.	12	9,505	1,755	843	328	768	501	13,700	13,700	0	546	14,246
	SANDHILL TEL. COOP., INC.	10	10,486	661	311	128	558	239	12,383	12,383	0	723	13,106
	PIEDMONT RURAL TEL. COOP.	8	8,998	825	656	90	530	260	11,359	11,359	0	576	11,935
	PALMETTO RURAL TEL. COOP., INC	14	8,944	929	354	114	611	329	11,281	11,281	0	503	11,784
	WEST CAROLINA RURAL TEL. COOP.	11	7,915	1,256	454	97	569	225	10,516	10,516	0	472	10,988
	BLUFFTON TELEPHONE COMPANY, INC.	15	4,088	1,051	0	205	346	900	6,590	6,590	0	476	7,066
	CHESNEE TELEPHONE COMPANY	8	3,590	501	204	53	557	69	4,974	4,974	0	162	5,136
	WILLISTON TELEPHONE COMPANY	13	4,099	298	63	40	177	166	4,843	4,843	0	53	4,896
	ST. STEPHEN TELEPHONE COMPANY	9	3,849	368	100	24	258	93	4,692	4,692	0	5	4,697
	RIDGEWAY TELEPHONE COMPANY, INC.	11	683	89	41	27	29	980	1,849	1,849	0	55	1,904
	MCCLELLANVILLE TEL. CO., INC.	8	1,294	152	32	15	80	20	1,593	1,593	0	0	1,593
	HEATH SPRINGS TEL. CO.	9	844	140	40	10	84	35	1,153	309	844	160	1,313
	NORWAY TELEPHONE CO. INC.	9	636	55	7	2	19	38	757	757	0	4	761
	LOCKHART TELEPHONE COMPANY, INC.	8	137	32	10	2	15	459	665	665	0	13	678
SUBTOTAL			1,183,523	292,993	104,378	57,622	95,986	227,503	1,962,005	1,961,083	922	118,585	2,080,590
SOUTH DAKOTA	NORTHWESTERN BELL-SOUTH DAKOTA	50	162,743	39,312	13,275	11,258	12,155	18,929	257,672	257,672	0	13,006	270,678
	GOLDEN WEST COMMUNICATIONS, INC.	20	10,390	2,556	506	503	716	416	15,087	15,087	0	472	15,559
	CITY OF BROOKINGS MUNICIPAL TEL. DEPT.	14	7,291	2,350	752	549	481	1,913	13,336	13,336	0	1,200	14,536
	GOLDEN WEST TELECOMM. COOP, INC.	14	5,899	1,368	398	259	619	4,613	13,156	13,156	0	972	14,128
	INTERSTATE TELECOMMUNICATIONS COOP., INC	24	8,371	2,304	447	472	593	1,424	13,611	13,611	0	163	13,774
	SULLY BUTTES TELEPHONE COOP. INC.	23	5,395	2,100	329	379	832	2,088	11,123	11,123	0	32	11,155
	DAKOTA COOP TELECOMMUNICATIONS CO INC	7	1,592	632	142	83	200	3,417	6,066	6,066	0	96	6,162
	SPLITROCK TELECOM COOPERATIVE INC.	17	3,095	814	166	224	264	918	5,481	5,481	0	50	5,531
	SIOUX VALLEY TELEPHONE COMPANY	16	3,199	889	178	282	142	609	5,299	5,299	0	2	5,301
	SANBORN TEL. COOP.	14	2,699	744	157	251	220	865	4,936	4,936	0	95	5,031
	MT. RUSHMORE TEL. CO.	19	3,052	721	212	157	194	161	4,497	4,497	0	106	4,603
	MIDSTATE TELEPHONE COMPANY	10	2,045	588	139	115	317	1,217	4,421	4,421	0	85	4,506

PUBLIC VERSION

Table 5: NUMBER OF LONG DISTANCE CARRIERS, LONG DISTANCE CARRIER'S PRESUBSCRIBED LINES AND EQUAL ACCESS LINES BY LOCAL EXCHANGE CARRIERS (AS OF DECEMBER 31, 1996)

SOUTH DAKOTA CONT'D	JAMES VALLEY COOPERATIVE TEL CO	15	2,124	519	85	95	307	971	4,101	4,101	0	7	4,108
	WEST RIVER COOPERATIVE TEL. CO.	13	1,987	376	129	158	230	941	3,821	3,821	0	76	3,897
	VALLEY TELECOMM. COOP. ASSN.,INC.	15	1,566	602	121	85	215	960	3,549	3,549	0	135	3,684
	CHEYENNE RIVER SIOUX TRIBAL TEL AUTH	8	1,011	343	72	38	218	800	2,482	2,482	0	221	2,703
	MOBRIDGE TELECOMM.	13	1,602	405	99	98	133	43	2,380	2,380	0	93	2,473
	ROBERTS COUNTY TEL. COOP. ASSN.	7	1,170	286	53	14	121	4	1,648	1,648	0	198	1,846
	ARMOUR INDEPENDENT TELEPHONE CO.	11	1,312	110	42	24	43	28	1,559	886	673	71	1,630
	BALTIC TELECOM COOPERATIVE	11	818	189	72	53	56	275	1,463	1,463	0	72	1,535
	UNION TELEPHONE COMPANY	1	1,513	0	0	0	0	0	1,513	0	1,513	0	1,513
	HANSON COUNTY TELEPHONE COMPANY	10	1,093	166	47	75	26	30	1,437	940	497	50	1,487
	BERESFORD MUNICIPAL TEL. CO.	10	857	109	70	114	12	34	1,196	1,196	0	52	1,248
	WESTERN TELEPHONE COMPANY	10	640	159	26	85	119	26	1,057	1,057	0	21	1,078
	KENNEBEC TELEPHONE COMPANY	8	592	97	8	6	19	0	730	453	277	49	779
	MCCOOK COOPERATIVE TELEPHONE CO.	8	281	78	16	19	21	306	721	721	0	29	750
	STOCKHOLM-STRANDBURG TEL. CO.	9	588	61	12	6	18	15	700	492	208	13	713
	JEFFERSON TELEPHONE COMPANY - SD	1	557	0	0	0	0	0	557	0	557	0	557
	KADOKA TELEPHONE COMPANY	1	553	0	0	0	0	0	553	0	553	0	553
	TRI-COUNTY TELCOM, INC.	8	202	69	11	18	31	128	459	459	0	0	459
	CITY OF FAITH MUNICIPAL TEL CO	1	360	0	0	0	0	0	360	0	360	0	360
	VIVIAN TELEPHONE COMPANY	1	110	0	0	0	0	0	110	0	110	0	110
SUBTOTAL			234,707	57,947	17,564	15,422	18,302	41,139	365,081	360,333	4,748	17,366	402,447
TENNESSEE	SOUTH CENTRAL BELL-TENNESSEE	106	1,683,010	353,463	112,148	109,188	77,026	130,188	2,465,023	2,465,023	0	119,715	2,584,738
	UNITED INTER-MOUNTAIN TEL. COMPANY-TN	39	117,159	21,531	69,767	3,704	6,869	9,354	228,404	228,307	97	4,492	232,896
	CITIZENS UTILITIES DBA CITIZENS OF TENN	41	35,266	6,673	2,603	1,548	2,717	17,888	66,695	66,695	0	2,782	69,477
	TENNESSEE TELEPHONE COMPANY	24	42,178	5,123	1,910	978	1,579	1,275	53,043	53,043	0	494	53,537
	TWIN LAKES TEL. COOP. CORP.	25	23,369	3,816	936	747	3,211	463	32,542	32,542	0	30	32,572
	BEN LOMAND RURAL TEL. COOP., INC.	14	11,326	1,302	543	339	1,352	15,376	30,238	30,238	0	976	31,214
	MILLINGTON TELEPHONE COMPANY INC.	13	17,963	2,485	884	954	449	588	23,323	23,323	0	84	23,407
	HIGHLAND TEL COOP INC - TENNESSEE	1	20,914	0	0	0	0	0	20,914	0	20,914	0	20,914
	CITIZENS TELECOM OF THE VOLUNTEER STATE	19	15,055	1,575	622	304	548	955	19,059	19,059	0	714	19,773
	CONCORD TEL. EXCHANGE, INC.	21	12,590	2,499	1,239	478	650	922	18,378	18,378	0	440	18,818
	DEKALB TELEPHONE COOP,INC.	14	13,949	1,649	483	392	1,007	323	17,803	17,803	0	528	18,331
	NORTH CENTRAL TEL. COOP., INC.	14	13,699	1,820	442	218	1,303	295	17,777	17,777	0	349	18,126
	UNITED TEL. CO.-TN	8	7,629	793	502	127	375	63	9,489	9,489	0	998	10,487
	BLEDSOE TELEPHONE COOPERATIVE	13	7,707	694	210	167	196	228	9,202	9,202	0	356	9,558
	ARDMORE TELEPHONE COMPANY INC.	10	6,405	1,045	338	109	628	231	8,756	8,756	0	0	8,756
	CENTURY TELEPHONE OF CLAIBORNE, INC.	13	4,850	427	141	52	286	1,782	7,538	7,538	0	561	8,099
	CENTURY TELEPHONE OF ADAMSVILLE, INC.	14	4,544	627	200	174	145	1,639	7,329	7,329	0	215	7,544
	TELLICO TEL. CO., INC.	12	6,346	466	137	92	201	154	7,396	7,396	0	77	7,473
	CENTURY TEL. OF OOLTEWAH-COLLEGEDALE,INC	13	3,881	878	284	159	333	1,400	6,935	6,935	0	482	7,417
	LORETTO TELEPHONE COMPANY INC.	10	4,485	570	141	54	185	82	5,517	5,517	0	40	5,557
	CROCKETT TEL., INC.	1	4,342	0	0	0	0	0	4,342	0	4,342	0	4,342
	WEST TENNESSEE TEL. CO., INC.	1	4,329	0	0	0	0	0	4,329	0	4,329	0	4,329
	PEOPLES TEL. CO., INC.	1	4,322	0	0	0	0	0	4,322	0	4,322	0	4,322
	YORKVILLE TELEPHONE COOPERATIVE INC.	1	1,865	0	0	0	0	0	1,865	0	1,865	0	1,865
	HUMPHREY'S COUNTY TEL. COMPANY	8	1,378	97	38	16	50	14	1,593	1,593	0	12	1,605
SUBTOTAL			2,068,561	407,533	193,568	119,800	99,130	183,220	3,071,812	3,035,943	35,869	133,345	3,205,157
TEXAS	SOUTHWESTERN BELL-TEXAS	159	4,911,358	1,362,241	655,550	286,800	218,293	942,598	8,376,840	8,376,840	0	490,164	8,867,004
	GTE SOUTHWEST INC. - TEXAS	106	764,052	213,162	92,580	34,832	52,159	188,445	1,345,230	1,303,118	42,112	110,532	1,455,762
	CONTEL OF TX, INC. DBA GTE TEXAS	75	134,508	19,207	6,545	3,874	8,116	31,530	203,780	202,346	1,434	5,339	209,119
	CENTRAL TELEPHONE COMPANY OF TEXAS	64	110,138	27,755	23,628	4,088	6,635	10,210	182,454	182,454	0	6,112	188,566
	UNITED TELEPHONE CO. OF TEXAS INC.	58	79,924	13,472	22,957	2,537	6,317	7,179	132,386	132,179	207	8,610	140,996
	LUFKIN-CONROE TELEPHONE EXCHANGE, INC.	28	36,403	8,710	3,206	1,515	2,346	31,565	83,835	83,835	0	7,396	91,231
	SUGAR LAND TEL. CO.	28	27,446	12,491	4,912	1,718	1,312	7,396	55,275	55,275	0	2,668	57,943
	FORT BEND TELEPHONE COMPANY	21	16,054	4,577	2,566	868	709	3,107	27,881	27,881	0	1,378	29,259
	CENTURY TELEPHONE OF SAN MARCOS, INC.	26	8,728	3,164	1,378	457	892	9,558	24,177	24,177	0	2,569	26,746
	EASTEX TELEPHONE COOPERATIVE INC.	22	16,198	2,375	862	297	834	4,150	24,716	24,716	0	1,651	26,367
	GUADALUPE VALLEY TEL CO-OP. INC.	27	17,454	3,500	1,534	652	786	1,452	25,378	25,037	341	969	26,347
	TEXAS-ALLTEL, INC.	23	17,701	2,323	661	244	1,023	2,257	24,209	24,209	0	210	24,419
	KERRVILLE TELEPHONE COMPANY	29	11,499	2,445	984	528	691	1,782	17,929	17,929	0	2,529	20,458
	HILL COUNTRY TELEPHONE CO-OP. INC.	27	8,216	1,424	600	333	448	1,082	12,105	12,105	0	596	12,701
	ETEX TELEPHONE COOPERATIVE INC.	15	8,921	895	346	104	514	393	11,173	11,173	0	476	11,649
	PEOPLES TELEPHONE COOPERATIVE - TX	18	6,817	993	265	116	454	2,162	10,807	9,537	1,270	22	10,829

PUBLIC VERSION

Table 5: NUMBER OF LONG DISTANCE CARRIERS, LONG DISTANCE CARRIER'S PRESUBSCRIBED LINES AND EQUAL ACCESS LINES BY LOCAL EXCHANGE CARRIERS (AS OF DECEMBER 31, 1996)

TEXAS CONT'D	CENTURY TELEPHONE OF LAKE DALLAS, INC.	10	3,925	1,030	425	111	294	1,258	7,043	7,043	0	95	7,139
	BRAZORIA TEL. CO.	15	2,051	375	152	29	177	3,215	5,999	5,999	0	679	6,678
	CENTRAL TEXAS TELEPHONE CO-OP. INC.	17	5,365	456	207	54	338	105	6,525	4,257	2,268	96	6,621
	TAYLOR TEL. CO-OP. INC.	16	5,146	442	131	127	280	355	6,481	6,481	0	94	6,575
	FIVE AREA TELEPHONE CO-OP. INC.	24	3,174	315	166	104	249	2,233	6,241	6,241	0	139	6,380
	LIVINGSTON TELEPHONE COMPANY	16	3,032	611	243	247	20	1,614	5,767	5,767	0	481	6,248
	COLORADO VALLEY TELEPHONE CO-OP. INC.	18	4,594	551	123	92	112	175	5,657	5,657	0	206	5,863
	VALLEY TELEPHONE CO-OP. INC. - TX	10	1,150	97	101	52	0	4,003	5,403	5,403	0	276	5,739
	COMANCHE COUNTY TEL COMPANY INC.	18	2,409	327	85	62	387	2,138	5,408	5,408	0	16	5,424
	CAP ROCK TELEPHONE COOPERATIVE, INC.	17	2,159	240	73	18	188	2,220	4,898	4,360	538	130	5,028
	BRAZOS TELEPHONE COOPERATIVE INC.	1	4,924	0	0	0	0	0	4,924	0	4,924	0	4,924
	SOUTH PLAINS TEL. COOP.,INC.	17	2,810	465	98	70	129	429	4,001	4,001	0	483	4,484
	BIG BEND TELEPHONE COMPANY INC.	14	2,638	631	462	83	176	181	4,171	4,171	0	231	4,402
	SOUTHWEST TEXAS TELEPHONE COMPANY	14	1,199	352	136	84	125	2,110	4,006	4,006	0	249	4,255
	CENTURY TELEPHONE OF PORT ARANSAS, INC.	19	1,983	477	143	56	61	646	3,366	3,366	0	383	3,749
	POKA-LAMBRO TELEPHONE COOPERATIVE, INC.	17	981	206	100	48	201	1,963	3,499	3,499	0	72	3,571
	MUENSTER TELEPHONE CORP. OF TEXAS	15	2,395	316	113	37	237	146	3,244	3,244	0	40	3,284
	WES-TEX TELEPHONE CO-OP.	14	2,194	331	75	42	360	173	3,175	3,175	0	0	3,175
	MID-PLAINS RURAL TEL. CO-OP. INC.	1	2,909	0	0	0	0	0	2,909	0	2,909	0	2,909
	GANADO TELEPHONE COMPANY INC.	15	2,378	96	49	38	59	49	2,669	1,368	1,301	64	2,733
	SANTA ROSA TEL. COOP.,INC.	10	1,778	118	38	16	111	106	2,167	1,545	622	0	2,167
	COLEMAN COUNTY TELEPHONE CO-OP. INC.	11	1,512	163	52	17	174	52	1,970	1,970	0	65	2,035
	WEST TEXAS RURAL TEL. CO-OP. INC.	13	733	151	46	76	251	638	1,895	1,895	0	80	1,975
	INDUSTRY TELEPHONE COMPANY	13	1,485	209	78	12	37	104	1,925	1,925	0	25	1,950
	ELECTRA TELEPHONE COMPANY, INC.	14	1,241	159	58	20	135	176	1,786	1,786	0	0	1,786
	COMMUNITY TELEPHONE COMPANY, INC.	15	1,171	166	59	11	114	132	1,653	1,653	0	71	1,724
	ALENCO COMMUNICATIONS, INC	10	1,172	132	60	1	15	24	1,404	1,404	0	0	1,404
	BLOSSOM TELEPHONE COMPANY	12	983	80	35	0	85	97	1,280	1,280	0	49	1,329
	XIT RURAL TELEPHONE CO-OP. INC.	10	902	111	34	32	90	90	1,259	1,259	0	20	1,279
	CAMERON TELEPHONE COMPANY - TEXAS	10	916	123	43	22	14	29	1,147	1,147	0	65	1,212
	LIPAN TELEPHONE COMPANY	17	901	109	40	9	72	32	1,163	1,163	0	4	1,167
	LA WARD TELEPHONE EXCHANGE INC	10	819	130	53	5	34	16	1,057	1,057	0	57	1,114
	RIVIERA TELEPHONE COMPANY INC.	11	712	129	45	21	27	41	975	975	0	98	1,073
	LAKE LIVINGSTON TEL. CO.	1	1,003	0	0	0	0	0	1,003	0	1,003	0	1,003
	TATUM TEL. CO.	13	662	126	47	5	31	36	907	907	0	15	922
	E.N.M.R. TEL. COOP.,INC.-TX	8	540	60	15	14	0	211	840	840	0	0	840
	NORTH TEXAS TELEPHONE COMPANY	9	654	36	34	2	47	66	839	839	0	0	839
	CUMBY TELEPHONE COOPERATIVE INC.	8	572	60	16	2	32	12	694	694	0	0	694
	DELL TELEPHONE CO-OP. INC. - TX	5	520	31	23	21	74	0	669	669	0	15	684
	KINGSGATE TEL., INC.	2	0	1	0	0	0	96	97	97	0	0	97
	BORDER TO BORDER COMMUNICATIONS	1	87	0	0	0	0	0	87	0	87	0	87
SUBTOTAL			6,251,198	1,688,153	822,322	340,603	306,265	1,269,897	10,678,438	10,619,422	59,016	645,520	11,323,958
UTAH	MOUNTAIN BELL-UTAH	68	543,367	140,224	71,396	38,748	36,606	111,550	941,891	941,891	0	75,830	1,017,721
	CITIZENS TELECOMMUNICATIONS CO. OF UTAH	26	7,523	1,345	526	236	434	3,232	13,296	13,296	0	5,863	19,159
	SOUTH CENTRAL UTAH TEL. ASSN. INC.	36	6,850	1,236	489	203	508	2,251	11,537	11,537	0	479	12,016
	EMERY TELEPHONE	11	3,231	491	228	62	159	353	4,524	4,524	0	0	4,524
	ALL WEST COMMUNICATIONS-UT	1	3,533	0	0	0	0	0	3,533	0	3,533	0	3,533
	UINTAH BASIN TEL. ASSN. INC.	9	2,100	275	88	11	175	85	2,734	2,734	0	49	2,783
	GUNNISON TEL. CO.	10	937	130	63	6	83	218	1,437	1,437	0	57	1,494
	SKYLINE TELECOM	9	1,121	86	44	8	36	106	1,401	700	701	0	1,401
	MANTI TELEPHONE COMPANY	1	1,385	0	0	0	0	0	1,385	0	1,385	0	1,385
	CENTRAL UTAH TEL. INC.	11	930	109	62	20	122	79	1,322	1,026	296	0	1,322
	BEAR LAKE COMMUNICATIONS	1	653	0	0	0	0	0	653	0	653	0	653
	BEEHIVE TELEPHONE CO., INC., UT	1	547	0	0	0	0	0	547	0	547	0	547
	NAVAJO COMMUNICATIONS CO INC-UT	8	238	34	5	3	0	54	334	334	0	0	334
SUBTOTAL			572,415	143,930	72,901	39,297	38,123	117,928	984,594	977,479	7,115	82,278	1,066,872
VERMONT	NEW ENGLAND TEL.-VT	51	204,904	38,699	22,949	7,077	3,460	30,244	307,533	307,533	0	5,237	312,770
	VERMONT TEL. CO-VT	15	14,567	2,419	898	210	266	1,273	19,633	19,633	0	0	19,633
	WAITSFIELD/FAYSTON TEL. CO.	13	12,413	2,878	1,403	260	193	2,031	19,178	19,178	0	0	19,178
	NORTHLAND TEL. CO-VT	14	3,825	764	338	49	100	391	5,467	5,467	0	118	5,585
	LUDLOW TEL. CO.	10	3,408	507	106	27	35	423	4,596	4,596	0	13	4,609
	NORTHFIELD TEL. CO.	10	2,242	248	161	39	22	201	2,913	2,913	0	796	3,709
	SHOREHAM TEL. CO., INC.	1	3,223	0	0	0	0	0	3,223	0	3,223	0	3,223

PUBLIC VERSION

Table 5: NUMBER OF LONG DISTANCE CARRIERS, LONG DISTANCE CARRIER'S PRESUBSCRIBED LINES AND EQUAL ACCESS LINES BY LOCAL EXCHANGE CARRIERS (AS OF DECEMBER 31, 1996)

VERMONT CONT'D	TOPSHAM TEL. CO., INC.	1	1,329	0	0	0	0	0	1,329	0	1,329	0	1,329
	PERKINSVILLE TEL. CO.	8	685	74	35	5	28	35	862	862	0	4	866
	FRANKLIN TEL. CO. - VT.	1	738	0	0	0	0	0	738	0	738	0	738
SUBTOTAL			247,334	45,789	25,980	7,667	4,104	34,598	365,472	360,182	5,290	6,168	371,640
VIRGINIA	C & P TELEPHONE COMPANY OF VIRGINIA	27	1,722,918	654,794	227,045	69,856	0	164,799	2,839,412	2,839,412	0	339,925	3,179,337
	CONTEL OF VA, INC. DBA GTE VIRGINIA	58	275,845	64,996	31,212	9,524	16,357	35,168	433,103	432,994	109	14,902	448,005
	CENTRAL TELEPHONE COMPANY OF VA	46	181,759	31,828	22,821	4,650	8,910	11,355	261,323	257,871	3,452	11,442	272,765
	UNITED INTER-MOUNTAIN TELEPHONE CO-VA	35	52,336	9,827	28,688	1,382	3,917	3,467	99,617	99,614	3	2,308	101,925
	CLIFTON FORGE WAYNESBORO TEL. CO.	14	24,722	3,660	982	552	1,106	1,919	32,941	32,941	0	1,685	34,626
	GTE SOUTH INC. - VIRGINIA	18	23,666	3,412	883	762	1,385	1,251	31,359	31,355	4	1,081	32,440
	SHENANDOAH TEL. CO.	10	10,371	1,957	727	225	318	6,492	20,090	20,090	0	808	20,898
	ROANOKE & BOTETOURT TEL. CO.	11	5,970	1,329	337	393	359	419	8,807	8,807	0	513	9,320
	PEOPLES MUTUAL TEL. CO.-VA	11	5,624	761	181	84	274	236	7,160	7,160	0	0	7,160
	CITIZENS TELEPHONE COOP. - VIRGINIA	12	5,427	446	284	112	164	188	6,621	6,621	0	63	6,684
	SCOTT COUNTY TEL. COOP. INC.	6	4,452	706	237	37	148	42	5,622	5,622	0	24	5,646
	AMELIA TEL. CORP.	14	3,689	294	88	35	254	238	4,598	4,598	0	5	4,603
	BUGGS ISLAND TELEPHONE COOP.	10	2,708	237	129	19	131	80	3,304	3,304	0	148	3,452
	PEMBROKE TELEPHONE COOPERATIVE	10	2,033	319	77	69	129	57	2,684	2,684	0	59	2,743
	NEW CASTLE TELEPHONE COMPANY	9	1,864	118	27	18	80	19	2,126	2,126	0	4	2,130
	VIRGINIA TELEPHONE COMPANY	7	1,821	122	44	6	39	20	2,052	2,052	0	0	2,052
	MOUNTAIN GROVE-WILLIAMSVILLE TEL. CO.	8	1,183	122	49	3	52	28	1,437	1,437	0	11	1,448
	HIGHLAND TEL COOP - VIRGINIA	7	964	149	52	5	0	69	1,239	1,239	0	34	1,273
	NORTH RIVER TELEPHONE COOPERATIVE	1	927	0	0	0	0	0	927	0	927	0	927
	NEW HOPE TELEPHONE COMPANY - VA	7	686	71	21	0	38	22	838	838	0	4	842
	BURKE'S GARDEN TELEPHONE COMPANY INC.	1	113	0	0	0	0	0	113	0	113	0	113
SUBTOTAL			2,329,079	775,148	313,884	87,732	33,661	225,869	3,765,373	3,760,765	4,608	373,016	4,138,389
WASHINGTON	PACIFIC NORTHWEST BELL-WASHINGTON	85	1,325,641	328,967	240,718	91,037	66,719	205,592	2,258,674	2,258,674	0	154,985	2,413,659
	GTE NORTHWEST INC. - WASHINGTON	66	376,071	83,167	59,172	18,297	27,980	79,297	643,984	642,531	1,453	32,538	676,502
	TELEPHONE UTILITIES OF WA INC.	36	103,819	15,671	10,687	3,598	5,767	6,016	145,558	145,558	0	5,772	151,330
	CONTEL NORTHWEST INC. DBA GTE SYSTEMS NW	35	48,397	7,989	5,245	1,973	3,871	9,105	76,580	76,562	18	2,179	78,759
	UNITED TELEPHONE CO OF THE NW - WA	36	49,592	6,684	9,393	1,546	3,707	3,382	74,304	69,831	4,473	3,258	77,562
	ELLENSBURG TELEPHONE COMPANY	16	16,769	2,312	1,051	376	1,074	713	22,295	22,295	0	560	22,855
	WHIDBEY TEL. CO.	16	7,287	1,440	1,101	173	493	636	11,130	11,130	0	311	11,441
	YELM TELEPHONE COMPANY	19	6,887	1,186	691	288	297	940	10,289	10,289	0	252	10,541
	LEWIS RIVER TELEPHONE COMPANY INC.	15	3,215	636	428	101	269	132	4,781	4,781	0	5	4,786
	MCDANIEL TELEPHONE COMPANY	13	2,674	399	173	71	153	126	3,596	3,596	0	42	3,638
	MASHELL TELECOM INC.	11	2,213	306	141	77	94	85	2,916	2,916	0	155	3,071
	TENINO TEL. CO.	12	2,313	261	164	18	66	106	2,928	2,928	0	92	3,020
	KALAMA TELEPHONE COMPANY	10	2,027	154	88	28	53	93	2,443	2,443	0	117	2,560
	INLAND TELEPHONE COMPANY - WA	1	2,043	0	0	0	0	0	2,043	0	2,043	0	2,043
	COWICHE TELEPHONE CO. INC.	8	1,546	187	103	32	0	124	1,992	1,992	0	0	1,992
	TOLEDO TELEPHONE COMPANY INC.	16	1,230	149	122	27	54	250	1,832	1,832	0	70	1,902
	ASOTIN TELEPHONE COMPANY - WA	12	886	57	101	16	54	76	1,190	1,190	0	0	1,190
	WESTERN WAHKIAKUM COUNTY TEL COMPANY	1	1,092	0	0	0	0	0	1,092	0	1,092	0	1,092
	HOOD CANAL TELEPHONE COMPANY	7	846	105	80	6	0	16	1,053	1,053	0	0	1,053
	PIONEER TELEPHONE COMPANY	11	537	92	38	6	69	81	823	823	0	18	841
	ST. JOHN TELEPHONE CO.	9	387	72	93	2	13	40	607	607	0	0	607
	HAT ISLAND TELEPHONE COMPANY	4	80	10	16	0	3	0	109	109	0	3	112
SUBTOTAL			1,955,552	449,844	329,605	117,672	110,716	306,810	3,270,199	3,261,140	9,059	200,357	3,470,556
WEST VIRGINIA	C & P TEL CO OF WV	18	497,706	118,148	35,025	19,003	0	33,677	703,559	703,559	0	73,786	777,345
	CUC DBA CITIZENS WVA	32	44,801	5,892	2,557	1,015	1,802	16,657	72,724	72,724	0	8,706	81,430
	CUC DBA CITIZENS WVA	22	20,690	2,723	754	402	530	8,161	33,260	33,260	0	20	33,280
	CITIZENS-MT. STATE	15	15,560	2,232	803	1,232	430	2,117	22,374	22,374	0	369	22,743
	ARMSTRONG TEL. CO.	8	2,501	708	147	90	120	437	4,003	4,003	0	124	4,127
	HARDY TEL CO	8	2,121	360	93	25	108	69	2,776	2,776	0	54	2,830
	ARMSTRONG OF WV	11	2,127	285	77	23	35	123	2,670	2,670	0	80	2,750
	WEST SIDE TEL-WV	8	1,694	425	135	49	77	78	2,458	2,458	0	130	2,588
	WAR TEL CO	1	1,573	0	0	0	0	0	1,573	0	1,573	0	1,573
	SPRUCE KNOB SENECA	1	943	0	0	0	0	0	943	0	943	0	943
SUBTOTAL			589,716	130,773	39,591	21,839	3,102	61,319	846,340	843,824	2,516	83,269	929,609
WISCONSIN	WISCONSIN BELL	79	1,301,041	319,701	127,973	57,194	41,658	200,296	2,047,863	2,047,863	0	88,348	2,136,211

PUBLIC VERSION

Table 5: NUMBER OF LONG DISTANCE CARRIERS, LONG DISTANCE CARRIER'S PRESUBSCRIBED LINES AND EQUAL ACCESS LINES BY LOCAL EXCHANGE CARRIERS (AS OF DECEMBER 31, 1996)

WISCONSIN CONT'D	GTE NORTH INC. - WISCONSIN	66	293,964	57,966	21,053	7,501	16,123	45,608	442,215	441,826	389	14,770	456,985
	NORTH-WEST TEL CO DBA PTI COMMUNICATIONS	24	53,691	10,150	3,478	1,308	1,760	4,461	74,848	74,848	0	1,425	76,273
	CENTURY TELEPHONE OF WISCONSIN INC.	14	19,656	6,987	3,159	1,109	1,430	20,645	52,986	52,986	0	2,127	55,113
	MID-PLAINS TELEPHONE INC.	16	11,856	5,684	2,451	892	466	8,600	29,969	29,969	0	385	30,354
	WOOD COUNTY TELEPHONE COMPANY	11	14,336	3,403	659	395	871	7,588	27,452	27,452	0	0	27,452
	CENCOM OF WISCONSIN, INC. DBA PTI COMM.	15	20,629	3,250	1,071	262	789	960	26,961	26,961	0	390	27,351
	FRONTIER COMMUNICATIONS OF WISCONSIN	11	11,573	2,201	777	651	342	7,102	22,646	22,579	67	435	23,081
	CENTURY TELEPHONE OF NORTHWEST WISCONSIN	13	8,707	1,915	500	182	424	4,142	15,870	14,175	1,695	192	16,062
	UTELCO, INC.	9	10,213	2,052	677	233	451	890	14,516	14,516	0	142	14,658
	CENTURY TELEPHONE OF NORTHERN WISCONSIN	15	7,213	1,056	323	134	200	3,145	12,071	9,527	2,544	103	12,174
	RHINELANDER TEL. CO.	15	7,493	1,593	558	177	344	550	10,715	10,715	0	458	11,173
	CENTURY TELEPHONE OF MONROE COUNTY, INC.	10	4,542	955	263	230	302	3,620	9,932	9,932	0	225	10,157
	CENTRAL STATE TELEPHONE COMPANY	13	7,710	952	304	138	369	285	9,778	9,579	199	0	9,778
	PLATTEVILLE TEL CO DBA PTI COMMUNICATION	11	5,209	733	317	111	195	603	7,168	7,168	0	1,547	8,715
	MOUNT VERNON TELEPHONE COMPANY	15	6,022	1,377	426	124	285	370	8,604	8,604	0	26	8,630
	CHEQUAMEGON TELEPHONE COOP INC.	8	6,510	1,016	359	28	196	248	8,357	8,357	0	231	8,588
	STATE LONG DISTANCE TEL. CO.	9	5,887	1,036	417	171	149	546	8,206	8,206	0	286	8,492
	SOUTHEAST TEL. CO. OF WIS., INC.	19	7,436	446	140	64	70	114	8,272	8,272	0	0	8,272
	MIDWAY TELEPHONE COMPANY	11	6,143	734	170	115	196	450	7,808	7,808	0	105	7,913
	FRONTIER COMMUNICATIONS-ST. CROIX, INC.	9	4,133	855	392	78	179	2,058	7,715	7,715	0	160	7,875
	NORTHEAST TEL. CO.	9	4,920	953	290	45	161	651	7,020	7,020	0	36	7,056
	PEOPLES TELEPHONE CO OF RANDOLPH	13	5,402	679	176	74	174	337	6,842	6,842	0	47	6,889
	BADGER TELECOM, INC.	11	5,207	681	209	64	212	349	6,722	6,722	0	61	6,783
	WAUNAKEE TELEPHONE COMPANY	10	4,922	796	255	189	154	269	6,585	6,585	0	2	6,587
	FARMERS TELEPHONE COMPANY - WI	8	4,361	391	219	82	117	948	6,118	6,118	0	0	6,118
	WAYSIDE TELEPHONE COMPANY	14	4,431	784	186	108	237	238	5,984	5,984	0	124	6,108
	EASTCOAST TELECOM, INC.	10	4,667	517	192	43	134	352	6,105	6,105	0	0	6,105
	VERNON TELEPHONE COOP	8	4,649	621	297	98	215	106	5,986	5,986	0	0	5,986
	AMERY TELEPHONE COMPANY	7	4,719	687	137	100	127	104	5,874	5,874	0	12	5,886
	CHIBARDUN TELEPHONE COOP INC.	9	1,516	318	113	60	90	3,219	5,316	5,316	0	50	5,366
	HEADWATERS TEL. CO.	9	3,507	801	251	35	135	70	4,799	4,799	0	115	4,914
	WEST WISCONSIN TELCOM COOP., INC.	8	2,847	710	990	69	94	102	4,812	4,812	0	0	4,812
	MOSINEE TEL. CO.	11	3,243	809	226	55	165	207	4,705	4,705	0	0	4,705
	AMHERST TELEPHONE COMPANY	8	2,909	654	269	81	174	209	4,316	4,316	0	101	4,417
	PRICE COUNTY TELEPHONE COMPANY	9	3,157	615	116	32	82	212	4,216	4,216	0	175	4,391
	UNION TELEPHONE COMPANY	9	3,191	511	159	48	117	98	4,124	4,124	0	24	4,148
	MOUNT HOREB TELEPHONE COMPANY	11	2,830	627	244	30	141	232	4,104	4,104	0	18	4,122
	NIAGARA TELEPHONE COMPANY	7	2,937	582	203	129	88	88	4,027	4,027	0	0	4,027
	GRANTLAND TELECOM, INC.	10	2,902	345	84	42	171	249	3,793	3,793	0	76	3,869
	NELSON TELEPHONE COOPERATIVE	10	3,119	376	85	31	110	125	3,846	3,846	0	0	3,846
	TRI-COUNTY TEL. COOP., INC.-WI	9	3,160	341	84	24	113	103	3,825	3,825	0	0	3,825
	BALDWIN TELCOM., INC.	13	2,566	473	130	67	48	229	3,513	3,513	0	102	3,615
	FRONTIER COMMUNICATIONS OF VIROQUA, INC.	10	2,067	302	112	93	98	811	3,483	3,483	0	106	3,589
	BURLINGTON BRIGHTON & WHEATLAND TEL.	7	2,805	396	122	37	105	22	3,487	3,487	0	2	3,489
	CRANDON TELEPHONE COMPANY	9	2,476	338	106	219	93	134	3,366	3,366	0	85	3,451
	MARQUETTE-ADAMS TEL. COOP., INC.	9	2,690	379	126	36	112	80	3,423	3,423	0	26	3,449
	LEMONWEIR VALLEY TEL. CO.	11	2,386	365	105	46	111	110	3,123	3,123	0	33	3,156
	RIVERSIDE TELECOM, INC.	8	2,262	264	99	24	131	249	3,029	3,029	0	38	3,067
	STOCKBRIDGE & SHERWOOD TEL. CO.	9	2,323	311	95	31	89	101	2,950	2,899	51	16	2,966
	BLOOMER TELEPHONE COMPANY	9	2,337	308	80	36	25	74	2,860	2,860	0	99	2,959
	FARMERS IND. TELEPHONE COMPANY - WI	8	1,965	439	143	36	95	133	2,811	2,811	0	0	2,811
	SCANDINAVIA TELEPHONE COMPANY	8	2,098	261	81	28	88	60	2,616	2,616	0	14	2,630
	RICHLAND-GRANT TEL. COOP., INC.	9	1,824	340	158	23	132	63	2,540	2,540	0	0	2,540
	MANAWA TELEPHONE COMPANY	10	1,816	204	63	11	43	204	2,341	2,341	0	100	2,441
	FRONTIER COMMUNICATIONS OF MONDOVI, INC.	10	1,432	274	55	26	47	568	2,402	2,402	0	26	2,428
	MILLTOWN MUTUAL TELEPHONE COMPANY	7	1,760	315	89	33	52	63	2,318	2,318	0	96	2,414
	SIREN TELEPHONE CO.,INC.	8	1,794	313	108	25	53	72	2,365	2,365	0	39	2,404
	CENTURY TELEPHONE OF LARSEN-READFIELD	9	1,364	318	49	27	53	540	2,351	2,351	0	12	2,363
	WITTENBERG TELEPHONE COMPANY	8	1,584	285	67	37	147	143	2,263	2,263	0	0	2,263
	LUCK TELEPHONE COMPANY	8	1,601	383	82	19	45	65	2,195	2,195	0	27	2,222
	COON VALLEY FARMERS TELEPHONE CO.,INC.	10	1,403	343	115	26	70	179	2,136	2,136	0	17	2,153
	THORP TELEPHONE CO DBA PTI COMMUNICATION	11	1,604	250	57	25	60	102	2,098	2,098	0	38	2,136
	CITIZENS TELEPHONE COOP INC - WI	8	1,688	216	58	30	50	22	2,064	2,064	0	21	2,085
	INDIANHEAD TEL. CO.	9	1,595	240	67	25	82	43	2,052	2,052	0	5	2,057
	SOMERSET TEL. CO., INC.	8	1,478	220	93	52	77	86	2,006	2,006	0	50	2,056

PUBLIC VERSION

Table 5: NUMBER OF LONG DISTANCE CARRIERS, LONG DISTANCE CARRIER'S PRESUBSCRIBED LINES AND EQUAL ACCESS LINES BY LOCAL EXCHANGE CARRIERS (AS OF DECEMBER 31, 1996)

WISCONSIN CONT'D	FRONTIER COMMUNICATIONS-LAKESHORE, INC.	9	1,191	229	59	14	32	464	1,989	1,989	0	28	2,017
	FORESTVILLE TEL. CO., INC.	9	501	254	73	3	52	1,027	1,910	1,910	0	17	1,927
	LA VALLE TELEPHONE COOPERATIVE	8	1,508	229	77	8	27	19	1,868	1,868	0	13	1,881
	HAGER TELECOM. INC.	10	1,343	284	75	28	40	86	1,856	1,856	0	0	1,856
	BAYLAND TELEPHONE INC.	9	1,316	236	119	16	31	64	1,782	1,782	0	0	1,782
	BONDUEL TELEPHONE COMPANY	8	1,409	138	56	30	39	61	1,733	1,733	0	2	1,735
	CUBA CITY TEL. EXCH. CO.	9	1,190	186	59	31	72	118	1,656	1,656	0	0	1,656
	BRUCE TELEPHONE COMPANY, INC.	8	1,257	179	46	25	52	12	1,571	1,571	0	17	1,588
	HILLSBORO TELEPHONE COMPANY INC.	8	1,080	244	58	23	58	105	1,568	1,568	0	19	1,587
	LAKEFIELD TELEPHONE COMPANY	8	970	193	29	10	34	302	1,538	1,538	0	0	1,538
	BLACK EARTH TELEPHONE COMPANY	10	1,083	157	70	11	35	99	1,455	1,455	0	0	1,455
	CLEAR LAKE TELEPHONE CO INC - WI	8	1,066	160	39	11	30	24	1,330	1,330	0	0	1,330
	FAIRWATER-BRANDON-ALTO TEL. CO.	11	970	131	28	15	15	115	1,274	1,274	0	1	1,275
	RIB LAKE TELEPHONE COMPANY	7	964	104	37	33	92	15	1,245	1,245	0	0	1,245
	COCHRANE COOPERATIVE TELEPHONE CO	8	925	113	39	12	53	41	1,183	1,183	0	0	1,183
	CASCO TELEPHONE COMPANY	8	930	139	35	16	18	20	1,158	1,158	0	18	1,176
	DICKEYVILLE TELEPHONE CO.	8	638	89	51	8	21	331	1,138	1,138	0	0	1,138
	SHARON TEL. CO.	6	845	111	90	9	0	74	1,129	1,129	0	0	1,129
	TENNEY TEL. CO.	8	745	110	46	13	45	51	1,010	1,010	0	22	1,032
	SPRING VALLEY TEL. CO., INC.	7	779	103	45	4	9	41	981	981	0	0	981
	BELMONT TELEPHONE COMPANY	7	573	82	27	24	43	37	786	786	0	0	786
	KENDALL TELEPHONE, INC.	7	440	65	10	5	16	11	547	547	0	0	547
	BERGEN TELEPHONE COMPANY	6	155	29	10	2	0	3	199	199	0	0	199
SUBTOTAL			1,961,564	447,972	173,932	73,899	72,570	327,832	3,057,769	3,052,824	4,945	113,285	3,171,054
WYOMING	MOUNTAIN BELL-WYOMING	45	147,153	31,022	14,324	9,868	8,049	15,649	226,095	226,095	0	8,849	234,944
	RANGE TEL. COOPERATIVE INC.-WY	11	14,906	1,504	670	340	526	632	18,778	14,872	3,906	15	18,793
	UNITED TELEPHONE CO. OF THE WEST-WY	14	4,403	795	792	260	576	159	6,985	6,985	0	223	7,208
	TRI-COUNTY TEL. ASSN. INC.-WY	1	6,908	0	0	0	0	0	6,908	0	6,908	0	6,908
	UNION TELEPHONE CO.	9	3,229	852	302	115	295	1,962	6,755	6,738	17	122	6,877
	TELEPHONE UTILITIES OF WYOMING, INC.	9	3,025	567	226	107	181	110	4,216	4,216	0	108	4,324
	SILVER STAR TEL. CO.- WY	9	1,402	208	112	121	123	106	2,072	2,072	0	52	2,124
	DUBOIS TELEPHONE EXCHANGE INC.	1	1,924	0	0	0	0	0	1,924	0	1,924	0	1,924
	ALL WEST COMMUNICATIONS-WY	1	321	0	0	0	0	0	321	0	321	0	321
	CHUGWATER TELEPHONE COMPANY	1	255	0	0	0	0	0	255	0	255	0	255
SUBTOTAL			183,526	34,948	16,626	10,841	9,750	18,618	274,309	260,978	13,331	9,369	283,678
UNITED STATES:			99,657,886	22,800,257	12,026,174	4,508,547	3,792,171	14,643,300	157,428,335	156,512,556	915,779	8,007,141	165,435,476
N. MARIANA ISL.	MICRONESIAN TELECOMMUNICATIONS CORP.	3	0	14,954	0	0	0	6,022	20,976	20,976	0	11	20,987
SUBTOTAL			0	14,954	0	0	0	6,022	20,976	20,976	0	11	20,987
PUERTO RICO	PUERTO RICO TEL. CO.	9	426,879	111,204	40,270	26	0	444,824	1,023,203	1,023,203	0	60,965	1,084,168
	PUERTO RICO TEL. CO. - CENTRAL	7	52,688	12,193	5,868	0	0	72,769	143,518	143,518	0	3,378	146,896
SUBTOTAL			479,567	123,397	46,138	26	0	517,593	1,166,721	1,166,721	0	64,343	1,231,064
VIRGIN ISLANDS	VIRGIN ISLANDS TELEPHONE CORPORATION	5	39,604	0	5,785	10	0	10,612	56,211	56,211	0	2,763	58,974
SUBTOTAL			39,604	0	5,785	10	0	10,612	56,211	56,211	0	2,763	58,974
GRAND TOTAL		621	100,177,257	22,938,608	12,078,097	4,508,583	3,792,171	15,177,527	158,672,243	157,756,464	915,779	8,074,258	166,746,501

Source: National Exchange Carrier Association PSL Database

*LDC is an abbreviation for long distance carriers

TABLE 6.1

PRESUBSCRIBED TELEPHONE LINES BY STATE AS OF DECEMBER 31, 1989

STATE	NUMBER OF TELEPHONE COMPANIES		BELL COMPANY LINES		OTHER COMPANY LINES		MARKET SHARES				TOTAL LINES
	LOCAL	LONG DISTANCE*	EQUAL ACCESS	NON-EQUAL ACCESS	EQUAL ACCESS	NON-EQUAL ACCESS	AT&T	MCI	SPRINT	OTHER CARRIERS	
ALABAMA	30	15	1,388,048	24,730	91,725	256,842	82.3%	10.8%	4.7%	2.3%	1,761,345
ALASKA	25	2	0	0	189,670	64,514	0.0%	0.0%	0.0%	100.0%	254,184
ARIZONA	10	23	1,641,123	54,206	0	94,312	69.5%	16.2%	8.6%	5.8%	1,789,641
ARKANSAS	28	15	621,707	74,852	49,416	278,374	85.6%	10.3%	3.5%	0.7%	1,024,349
CALIFORNIA	22	30	12,267,791	978,863	3,085,171	424,230	76.3%	11.7%	9.6%	2.5%	16,756,055
COLORADO	27	25	1,623,151	138,564	1,032	31,755	69.4%	18.8%	8.1%	3.6%	1,794,502
CONNECTICUT	2	17	0	0	1,621,539	187,417	84.8%	9.2%	4.6%	1.3%	1,808,956
DELAWARE	1	13	375,108	0	0	0	71.0%	20.1%	6.4%	2.4%	375,108
DISTRICT OF COLUMBIA	1	22	773,951	0	0	0	74.0%	15.6%	5.7%	4.6%	773,951
FLORIDA	13	25	4,165,714	92,040	2,453,696	437,178	78.1%	8.0%	8.2%	5.7%	7,148,628
GEORGIA	36	20	2,507,509	105,673	161,247	345,512	77.9%	12.4%	7.5%	2.1%	3,119,941
HAWAII	1	6	0	0	489,438	60,662	63.7%	3.5%	32.2%	0.6%	550,100
IDAHO	20	13	324,060	20,350	33,567	71,358	76.4%	17.0%	4.6%	2.0%	449,335
ILLINOIS	56	26	4,852,095	186,308	500,221	573,908	77.7%	13.1%	6.8%	2.5%	6,112,532
INDIANA	42	19	1,357,310	211,491	721,709	290,856	78.8%	11.4%	5.8%	4.0%	2,581,366
IOWA	153	17	693,214	174,506	232,193	232,706	80.7%	15.3%	3.2%	0.8%	1,332,619
KANSAS	40	15	816,720	195,135	18,203	190,582	80.4%	10.7%	6.7%	2.2%	1,220,640
KENTUCKY	19	20	823,055	74,852	397,277	244,836	85.1%	7.6%	4.1%	3.1%	1,540,020
LOUISIANA	20	22	1,650,146	43,860	0	132,013	79.4%	8.7%	6.3%	5.7%	1,826,019
MAINE	19	8	380,292	148,693	0	96,969	91.4%	6.1%	2.4%	0.2%	625,954
MARYLAND	2	25	2,588,480	36,000	0	4,442	68.2%	22.3%	6.2%	3.2%	2,628,922
MASSACHUSETTS	3	15	3,328,122	69,520	0	3,286	82.8%	11.6%	4.2%	1.5%	3,400,928
MICHIGAN	38	22	3,744,306	269,611	369,135	348,673	77.9%	11.9%	5.2%	5.0%	4,731,725
MINNESOTA	91	24	1,504,161	231,038	77,629	461,801	76.6%	14.3%	5.3%	3.8%	2,274,629
MISSISSIPPI	20	16	788,319	144,120	0	60,461	84.8%	8.7%	4.9%	1.6%	992,900
MISSOURI	44	22	1,715,890	188,480	172,273	435,338	78.6%	10.2%	6.9%	4.2%	2,511,981
MONTANA	17	11	179,705	122,821	0	82,855	88.0%	9.2%	1.4%	1.4%	385,381
NEBRASKA	42	18	361,882	68,112	237,425	132,806	70.3%	10.0%	5.6%	14.2%	800,225
NEVADA	13	17	171,618	31,442	402,111	52,025	77.2%	9.0%	7.6%	6.2%	657,196
NEW HAMPSHIRE	12	8	495,259	74,106	0	37,952	85.6%	10.7%	3.0%	0.7%	607,317
NEW JERSEY	3	30	4,567,897	63,000	104,493	40,534	79.5%	13.5%	4.7%	2.3%	4,775,924
NEW MEXICO	14	20	495,517	72,204	36,636	55,413	76.4%	15.2%	5.7%	2.6%	659,770
NEW YORK	45	28	8,210,027	564,084	471,755	511,306	80.6%	11.1%	5.1%	3.2%	9,757,172
NORTH CAROLINA	28	15	1,559,819	61,239	1,070,440	536,510	79.9%	8.0%	10.9%	1.1%	3,228,008
NORTH DAKOTA	24	10	171,221	50,012	0	90,512	87.1%	9.1%	2.0%	1.8%	311,745
OHIO	44	27	3,001,295	52,577	1,582,226	515,312	74.1%	12.7%	7.3%	5.8%	5,151,410
OKLAHOMA	39	20	989,366	245,696	64,751	200,332	82.2%	10.8%	5.0%	2.1%	1,500,145
OREGON	34	17	969,244	489	219,773	211,149	75.2%	14.6%	6.4%	3.8%	1,400,655
PENNSYLVANIA	39	34	4,848,387	0	678,376	712,888	78.1%	13.4%	5.7%	2.8%	6,239,651
RHODE ISLAND	1	12	508,505	1,139	0	0	81.0%	13.8%	4.5%	0.7%	509,644
SOUTH CAROLINA	28	14	1,010,496	28,220	327,022	166,736	76.9%	14.7%	6.5%	1.9%	1,532,474
SOUTH DAKOTA	31	13	122,781	131,466	0	72,286	92.9%	4.2%	1.7%	1.2%	326,533
TENNESSEE	25	27	1,787,436	66,364	198,097	248,588	79.9%	10.3%	8.2%	1.6%	2,300,485
TEXAS	60	68	5,841,154	398,697	1,042,164	729,067	70.0%	14.1%	7.9%	8.0%	8,011,082
UTAH	13	17	638,033	50,769	0	27,321	66.9%	16.8%	7.2%	9.1%	716,123
VERMONT	9	7	191,696	63,607	0	48,852	91.0%	3.0%	4.7%	1.3%	304,155
VIRGINIA	20	23	2,396,439	16,000	488,574	267,177	71.4%	19.1%	6.8%	2.7%	3,168,190
WASHINGTON	23	22	1,751,055	0	437,394	276,098	74.1%	16.4%	7.1%	2.5%	2,464,547
WEST VIRGINIA	10	13	506,294	94,000	33,898	86,946	79.7%	16.8%	3.2%	0.4%	721,138
WISCONSIN	95	29	1,559,891	22,625	324,713	496,599	78.6%	11.6%	5.7%	4.1%	2,403,828
WYOMING	11	8	119,140	88,120	2,750	14,531	83.4%	10.9%	3.4%	2.3%	224,541
UNITED STATES	1,443 **		92,384,429	5,829,681	18,387,739	10,941,820	77.2%	12.3%	6.8%	3.7%	127,543,669
PUERTO RICO	2	1	0	0	0	893,676	100.0%	0.0%	0.0%	0.0%	893,676
VIRGIN ISLANDS	1	1	0	0	0	45,134	100.0%	0.0%	0.0%	0.0%	45,134
GRAND TOTAL	1,446 **		92,384,429	5,829,681	18,387,739	11,880,630	77.4%	12.2%	6.8%	3.7%	128,482,479

Source: National Exchange Carrier Association PSL Database

*The estimate for the number of long distance carriers serving a state equals the number of long distance carriers from the local study area with the maximum number of long distance carriers.

**This total number of operating companies overstates the actual number of operating companies because many operating companies serve more than one state. There are about 1,300 separate operating companies.

TABLE 6.2

PRESUBSCRIBED TELEPHONE LINES BY STATE AS OF DECEMBER 31, 1990

STATE	NUMBER OF TELEPHONE COMPANIES		BELL COMPANY LINES		OTHER COMPANY LINES		MARKET SHARES				TOTAL LINES
	LOCAL	LONG DISTANCE*	EQUAL ACCESS	NON-EQUAL ACCESS	EQUAL ACCESS	NON-EQUAL ACCESS	AT&T	MCI	SPRINT	OTHER CARRIERS	
ALABAMA	30	12	1,479,763	0	103,759	260,237	82.1%	10.7%	4.6%	2.6%	1,843,759
ALASKA	25	2	0	0	223,336	47,355	0.0%	0.0%	0.0%	100.0%	270,691
ARIZONA	11	28	1,709,649	49,665	0	103,124	69.9%	16.3%	8.5%	5.3%	1,862,438
ARKANSAS	28	16	646,488	66,808	71,297	263,410	85.3%	10.0%	3.7%	1.0%	1,048,003
CALIFORNIA	22	34	12,971,803	365,349	3,424,264	317,341	74.1%	13.3%	9.9%	2.7%	17,078,757
COLORADO	27	27	1,722,559	114,310	2,136	32,100	68.8%	18.9%	8.3%	4.1%	1,871,105
CONNECTICUT	2	13	0	0	1,802,477	37,262	83.1%	10.5%	4.9%	1.4%	1,839,739
DELAWARE	1	20	388,086	0	0	0	69.9%	21.2%	5.8%	3.0%	388,086
DISTRICT OF COLUMBIA	1	21	779,597	0	0	0	73.9%	16.5%	5.2%	4.5%	779,597
FLORIDA	13	27	4,422,289	0	2,820,096	266,008	77.5%	9.1%	7.9%	5.5%	7,508,393
GEORGIA	36	19	2,713,753	0	222,978	306,228	76.3%	13.5%	7.9%	2.3%	3,242,959
HAWAII	1	8	0	0	468,874	60,055	65.8%	4.8%	28.7%	0.6%	528,929
IDAHO	20	11	349,966	14,049	38,385	75,031	76.0%	15.2%	6.1%	2.8%	477,431
ILLINOIS	55	26	5,141,712	37,483	635,465	457,836	77.1%	13.2%	7.1%	2.6%	6,272,496
INDIANA	42	22	1,460,411	166,925	849,199	176,791	77.5%	11.7%	6.4%	4.4%	2,653,326
IOWA	153	13	716,855	159,709	281,649	187,646	79.0%	15.7%	4.6%	0.7%	1,345,859
KANSAS	40	12	874,546	166,447	35,129	180,259	80.2%	11.0%	7.0%	1.7%	1,256,381
KENTUCKY	19	19	920,201	0	426,426	244,839	82.1%	10.1%	4.4%	3.5%	1,591,466
LOUISIANA	20	23	1,758,395	0	22,010	111,999	75.5%	11.8%	6.1%	6.7%	1,892,404
MAINE	19	9	437,130	104,873	0	100,118	89.2%	6.9%	3.6%	0.4%	642,121
MARYLAND	2	23	2,652,457	13,000	0	4,658	68.3%	22.3%	5.9%	3.5%	2,670,115
MASSACHUSETTS	3	17	3,445,732	61,235	0	3,317	80.9%	11.9%	5.5%	1.8%	3,510,284
MICHIGAN	38	22	3,935,423	174,313	460,337	273,681	77.1%	12.5%	5.4%	5.0%	4,843,754
MINNESOTA	91	22	1,536,023	199,253	186,157	367,687	75.4%	14.8%	5.8%	4.0%	2,289,120
MISSISSIPPI	18	15	946,480	0	0	61,909	79.7%	12.9%	5.5%	1.9%	1,008,389
MISSOURI	44	19	1,849,050	102,389	192,827	434,510	78.3%	10.5%	7.2%	4.0%	2,578,776
MONTANA	17	10	193,717	114,256	31,108	55,229	85.5%	8.9%	2.9%	2.7%	394,310
NEBRASKA	42	18	369,185	56,501	258,650	117,990	69.2%	10.5%	5.6%	14.7%	802,326
NEVADA	13	15	175,268	34,209	467,829	33,762	75.6%	9.7%	8.4%	6.3%	711,068
NEW HAMPSHIRE	12	10	547,404	20,563	6,800	31,590	83.5%	10.9%	4.3%	1.3%	606,357
NEW JERSEY	3	33	4,759,009	0	116,866	33,204	78.6%	14.3%	4.6%	2.6%	4,909,079
NEW MEXICO	14	22	528,549	54,250	37,551	57,213	74.0%	15.4%	7.2%	3.4%	677,563
NEW YORK	45	30	8,931,532	245,480	485,485	522,824	78.9%	11.7%	5.7%	3.7%	10,185,321
NORTH CAROLINA	28	13	1,662,820	0	1,194,247	463,152	77.3%	10.2%	11.1%	1.4%	3,320,219
NORTH DAKOTA	24	12	193,747	50,276	0	91,454	83.9%	10.8%	3.0%	2.3%	335,477
OHIO	44	27	3,153,792	411	1,804,682	336,173	72.2%	13.5%	8.0%	6.4%	5,295,058
OKLAHOMA	39	21	1,078,210	190,105	78,909	190,663	80.4%	11.7%	5.0%	2.8%	1,537,887
OREGON	34	17	998,301	493	272,806	191,282	74.8%	14.7%	7.0%	3.5%	1,462,882
PENNSYLVANIA	39	31	4,977,802	0	813,667	612,847	76.4%	14.8%	5.7%	3.1%	6,404,316
RHODE ISLAND	1	11	520,649	1,669	0	0	80.7%	13.5%	5.0%	0.8%	522,318
SOUTH CAROLINA	28	13	1,072,845	0	416,634	102,857	74.6%	16.8%	5.9%	2.6%	1,592,336
SOUTH DAKOTA	31	9	178,815	63,163	0	73,733	87.9%	6.9%	4.2%	1.0%	315,711
TENNESSEE	25	26	1,937,362	0	224,949	239,297	79.5%	11.0%	7.5%	2.0%	2,401,608
TEXAS	56	63	6,096,604	386,298	1,133,411	688,987	69.2%	14.9%	8.0%	7.9%	8,305,300
UTAH	13	16	657,440	52,332	0	28,363	66.0%	16.2%	8.5%	9.3%	738,135
VERMONT	9	8	233,392	28,762	0	49,718	86.4%	4.9%	6.7%	2.0%	311,872
VIRGINIA	21	21	2,434,170	8,000	606,583	176,738	70.0%	20.8%	6.9%	2.4%	3,225,491
WASHINGTON	23	23	1,844,402	0	542,669	234,821	73.8%	16.0%	7.7%	2.4%	2,621,892
WEST VIRGINIA	10	10	563,402	39,000	47,147	77,626	76.4%	19.5%	3.6%	0.5%	727,175
WISCONSIN	95	28	1,647,372	23,164	459,333	380,031	77.0%	12.6%	5.9%	4.6%	2,509,900
WYOMING	11	7	152,001	61,686	0	17,901	83.0%	10.8%	5.1%	1.0%	231,588
UNITED STATES**	1,438 **		97,766,158	3,226,426	21,266,127	9,180,856	75.8%	13.2%	7.1%	3.9%	131,439,567
PUERTO RICO	2	10	0	0	922,829	247	40.8%	6.1%	0.8%	52.4%	923,076
VIRGIN ISLANDS	1	1	0	0	0	45,965	100.0%	0.0%	0.0%	0.0%	45,965
GRAND TOTAL**	1,441 **	325	97,766,158	3,226,426	22,188,956	9,227,068	75.6%	13.2%	7.0%	4.2%	132,408,608

Source: National Exchange Carrier Association PSL Database

*The estimate for the number of long distance carriers serving a state equals the number of long distance carriers from the local study area with the maximum number of long distance carriers.

**This total number of operating companies overstates the actual number of operating companies because many operating companies serve more than one state. There are about 1,300 separate operating companies.

TABLE 6.3

PRESUBSCRIBED TELEPHONE LINES BY STATE AS OF DECEMBER 31, 1991

STATE	NUMBER OF TELEPHONE COMPANIES		BELL COMPANY LINES		OTHER COMPANY LINES		MARKET SHARES				TOTAL LINES
	LOCAL	LONG DISTANCE*	EQUAL ACCESS	NON-EQUAL ACCESS	EQUAL ACCESS	NON-EQUAL ACCESS	AT&T	MCI	SPRINT	OTHER CARRIERS	
ALABAMA	30	17	1,529,540	0	125,646	248,973	82.0%	11.4%	3.5%	3.1%	1,904,159
ALASKA	25	2	0	0	239,656	56,680	0.0%	0.0%	0.0%	100.0%	296,336
ARIZONA	11	30	1,737,524	49,928	4,697	104,859	70.6%	16.3%	7.6%	5.5%	1,897,008
ARKANSAS	28	14	690,949	39,989	151,166	189,398	85.2%	10.1%	3.0%	1.7%	1,071,502
CALIFORNIA	22	40	13,390,653	0	3,706,451	127,208	72.8%	14.6%	9.2%	3.5%	17,224,312
COLORADO	27	32	1,809,457	73,015	2,195	33,233	68.5%	19.4%	7.6%	4.5%	1,917,900
CONNECTICUT	2	13	0	0	1,835,740	16,234	82.6%	10.6%	4.9%	1.9%	1,851,974
DELAWARE	1	24	401,330	0	0	0	71.2%	20.1%	5.7%	3.1%	401,330
DISTRICT OF COLUMBIA	1	21	798,375	0	0	0	76.0%	14.0%	5.4%	4.6%	798,375
FLORIDA	13	57	4,591,990	0	3,029,229	198,535	77.4%	10.4%	7.2%	5.0%	7,819,754
GEORGIA	36	38	2,794,754	0	249,119	301,143	76.4%	13.6%	7.3%	2.7%	3,345,016
HAWAII	1	33	0	0	513,112	44,944	59.6%	7.2%	23.7%	9.5%	558,056
IDAHO	20	16	365,198	25	69,252	42,986	76.1%	14.9%	5.1%	3.9%	477,461
ILLINOIS	56	30	5,253,951	17,393	802,127	310,610	76.7%	13.7%	6.5%	3.0%	6,384,081
INDIANA	42	21	1,548,461	109,850	909,284	134,886	77.3%	12.3%	5.7%	4.7%	2,702,481
IOWA	153	16	775,101	115,640	301,946	172,825	78.4%	16.2%	4.4%	0.9%	1,365,512
KANSAS	40	16	993,780	68,809	40,319	177,275	79.4%	11.8%	6.7%	2.1%	1,280,183
KENTUCKY	19	21	957,659	0	461,437	230,884	80.4%	11.2%	3.7%	4.6%	1,649,980
LOUISIANA	20	30	1,823,260	0	34,085	103,039	76.6%	11.8%	4.7%	6.9%	1,960,384
MAINE	19	10	486,145	51,384	5,998	100,370	87.1%	7.6%	4.5%	0.8%	643,897
MARYLAND	2	22	2,717,794	10,000	0	4,811	70.8%	19.4%	5.7%	4.1%	2,732,605
MASSACHUSETTS	3	18	3,517,011	20,862	0	3,365	78.7%	11.7%	7.3%	2.3%	3,541,238
MICHIGAN	38	29	4,095,603	70,481	537,730	214,652	76.1%	13.8%	4.7%	5.4%	4,918,466
MINNESOTA	91	22	1,599,516	109,045	215,763	356,305	74.3%	15.2%	5.8%	4.7%	2,280,629
MISSISSIPPI	19	16	981,195	0	16,665	46,932	81.1%	12.5%	3.9%	2.5%	1,044,792
MISSOURI	44	23	1,960,061	21,202	254,149	389,165	78.2%	11.2%	6.5%	4.1%	2,624,577
MONTANA	17	10	223,176	92,770	46,413	42,925	85.0%	9.2%	2.5%	3.3%	405,284
NEBRASKA	42	15	408,827	36,757	273,605	107,165	69.7%	11.5%	5.1%	13.6%	826,354
NEVADA	13	19	190,708	32,797	510,154	34,035	74.3%	10.9%	8.7%	6.1%	767,694
NEW HAMPSHIRE	12	10	566,512	21,696	12,542	26,576	82.3%	10.1%	5.7%	1.9%	627,326
NEW JERSEY	3	38	4,827,965	0	141,014	12,583	79.6%	13.5%	4.2%	2.7%	4,981,562
NEW MEXICO	14	25	564,483	35,824	45,401	54,836	74.4%	15.6%	6.1%	3.9%	700,544
NEW YORK	44	36	9,265,091	175,840	719,264	311,703	76.7%	12.0%	7.2%	4.0%	10,471,898
NORTH CAROLINA	28	19	1,695,256	0	1,305,651	403,517	76.2%	11.1%	11.0%	1.7%	3,404,424
NORTH DAKOTA	24	12	213,896	34,362	0	92,228	84.0%	10.6%	2.8%	2.5%	340,486
OHIO	42	31	3,172,359	0	1,911,421	268,160	71.4%	14.2%	7.4%	7.0%	5,351,940
OKLAHOMA	39	27	1,140,827	150,865	99,340	173,956	80.5%	11.7%	4.1%	3.7%	1,564,988
OREGON	34	26	1,025,059	0	322,872	116,572	74.7%	15.0%	6.7%	3.6%	1,464,503
PENNSYLVANIA	39	31	5,050,714	0	1,051,409	401,049	76.7%	14.0%	5.2%	4.1%	6,503,172
RHODE ISLAND	1	13	528,432	0	0	0	80.1%	12.1%	6.0%	1.8%	528,432
SOUTH CAROLINA	28	22	1,102,515	0	448,097	80,808	73.6%	16.3%	5.2%	4.9%	1,631,420
SOUTH DAKOTA	31	10	226,172	34,638	345	75,866	87.1%	8.7%	3.2%	0.9%	337,021
TENNESSEE	25	32	2,015,133	0	257,490	212,893	79.5%	11.5%	6.6%	2.5%	2,485,516
TEXAS	56	74	6,510,009	162,594	1,317,788	561,885	68.1%	16.0%	6.7%	9.2%	8,552,276
UTAH	13	18	688,266	48,540	0	29,395	68.8%	15.9%	6.8%	8.5%	766,201
VERMONT	9	8	256,706	3,201	15,530	35,643	82.9%	6.9%	7.3%	2.9%	311,080
VIRGINIA	21	24	2,528,387	0	662,884	135,351	71.5%	19.0%	6.6%	3.0%	3,326,622
WASHINGTON	22	35	1,900,233	0	620,236	113,603	73.0%	17.3%	6.9%	2.8%	2,634,072
WEST VIRGINIA	10	12	654,711	0	55,758	71,665	79.6%	16.3%	3.3%	0.8%	782,134
WISCONSIN	95	25	1,722,192	0	669,159	196,501	75.4%	13.5%	5.2%	5.9%	2,587,852
WYOMING	10	10	167,896	49,292	2,772	16,103	84.1%	10.5%	4.4%	1.0%	236,063
UNITED STATES	1,435 **		101,464,832	1,636,799	23,994,911	7,184,330	75.3%	13.6%	6.7%	4.5%	134,280,872
PUERTO RICO	2	10	0	0	955,541	155	41.3%	5.4%	1.4%	51.9%	955,696
VIRGIN ISLANDS	1	1	0	0	0	50,033	100.0%	0.0%	0.0%	0.0%	50,033
GRAND TOTAL	1,438 **	388	101,464,832	1,636,799	24,950,452	7,234,518	75.0%	13.5%	6.6%	4.8%	135,286,601

Source: National Exchange Carrier Association PSL Database

*The estimate for the number of long distance carriers serving a state equals the number of long distance carriers from the local study area with the maximum number of long distance carriers.

**This total number of operating companies overstates the actual number of operating companies because many operating companies serve more than one state. There are about 1,300 separate operating companies.

TABLE 6.4

PRESUBSCRIBED TELEPHONE LINES BY STATE AS OF DECEMBER 31, 1992

STATE	NUMBER OF TELEPHONE COMPANIES		BELL COMPANY LINES		OTHER COMPANY LINES		MARKET SHARES				TOTAL LINES
	LOCAL	LONG DISTANCE*	EQUAL ACCESS	NON-EQUAL ACCESS	EQUAL ACCESS	NON-EQUAL ACCESS	AT&T	MCI	SPRINT	OTHER CARRIERS	
ALABAMA	30	17	1,571,594	0	237,567	140,599	78.9%	13.3%	3.5%	4.4%	1,949,760
ALASKA	25	2	0	0	267,314	40,323	0.0%	0.0%	0.0%	100.0%	307,637
ARIZONA	12	38	1,803,758	44,014	9,624	105,855	69.6%	16.0%	8.0%	6.4%	1,963,251
ARKANSAS	29	15	745,113	11,536	200,183	156,778	83.1%	11.0%	3.3%	2.5%	1,113,610
CALIFORNIA	22	54	13,725,211	0	3,842,065	107,584	70.6%	15.8%	9.5%	4.1%	17,674,860
COLORADO	27	37	1,916,994	18,867	2,791	34,320	65.6%	20.1%	8.3%	6.1%	1,972,972
CONNECTICUT	2	18	0	0	1,861,979	0	81.9%	10.1%	5.7%	2.3%	1,861,979
DELAWARE	1	27	414,319	0	0	0	70.4%	20.0%	6.2%	3.4%	414,319
DISTRICT OF COLUMBIA	1	20	793,866	0	0	0	71.6%	18.0%	5.6%	4.8%	793,866
FLORIDA	13	57	4,717,257	0	3,003,611	100,173	75.9%	11.3%	7.5%	5.2%	7,821,041
GEORGIA	36	41	2,937,827	0	348,324	216,558	74.9%	14.5%	7.4%	3.1%	3,502,709
HAWAII	1	9	0	0	473,139	100,578	68.5%	7.8%	23.3%	0.5%	573,717
IDAHO	20	18	387,020	36	74,345	47,780	75.1%	14.7%	5.0%	5.2%	509,181
ILLINOIS	56	32	5,355,295	0	905,440	231,622	75.3%	14.5%	6.8%	3.4%	6,492,357
INDIANA	42	19	1,715,268	0	977,582	102,307	74.9%	13.0%	6.1%	6.0%	2,795,157
IOWA	153	17	841,423	72,272	329,150	153,723	76.6%	16.9%	4.8%	1.7%	1,396,568
KANSAS	40	16	1,069,131	15,005	50,040	170,105	77.0%	12.9%	7.1%	2.9%	1,304,281
KENTUCKY	19	20	985,028	0	582,857	115,052	78.5%	12.4%	3.8%	5.3%	1,682,937
LOUISIANA	20	35	1,861,564	0	49,215	92,095	73.7%	12.5%	4.4%	9.4%	2,002,874
MAINE	19	9	559,772	0	66,788	40,594	83.8%	9.9%	4.9%	1.4%	667,154
MARYLAND	2	23	2,796,718	0	0	4,898	69.1%	20.3%	6.2%	4.4%	2,801,616
MASSACHUSETTS	3	20	3,652,950	0	0	3,369	77.6%	12.2%	7.6%	2.6%	3,656,319
MICHIGAN	38	26	4,270,813	5,801	600,543	177,946	74.3%	14.8%	4.7%	6.2%	5,055,103
MINNESOTA	91	24	1,701,019	100,342	436,172	150,203	71.1%	16.6%	6.0%	6.2%	2,387,736
MISSISSIPPI	19	15	1,010,900	0	24,764	40,754	79.5%	13.4%	3.9%	3.2%	1,076,418
MISSOURI	44	28	2,042,875	8,583	437,963	233,983	75.3%	12.9%	7.1%	4.7%	2,723,404
MONTANA	17	18	265,987	59,306	59,997	33,737	82.0%	10.5%	2.9%	4.6%	419,027
NEBRASKA	42	16	445,354	18,622	297,160	91,694	68.6%	12.6%	5.3%	13.5%	852,830
NEVADA	13	19	203,548	31,127	556,667	11,308	72.6%	12.2%	8.9%	6.3%	802,650
NEW HAMPSHIRE	12	11	612,891	0	29,364	10,314	80.0%	10.9%	6.4%	2.8%	652,569
NEW JERSEY	3	38	4,917,830	0	144,748	13,056	77.8%	14.5%	4.5%	3.3%	5,075,634
NEW MEXICO	14	28	602,957	10,694	66,206	37,973	71.7%	16.5%	6.6%	5.1%	717,830
NEW YORK	44	38	9,396,804	86,568	863,487	159,271	74.4%	13.2%	7.5%	4.9%	10,506,130
NORTH CAROLINA	28	24	1,763,788	0	1,498,015	258,785	73.9%	12.0%	11.7%	2.4%	3,520,588
NORTH DAKOTA	24	15	224,640	21,153	2,137	92,039	81.0%	11.9%	3.7%	3.5%	339,969
OHIO	42	27	3,241,570	0	1,980,033	275,227	70.3%	14.7%	7.4%	7.6%	5,496,830
OKLAHOMA	39	29	1,200,211	117,238	152,740	128,464	78.2%	12.5%	4.3%	5.1%	1,598,653
OREGON	34	33	1,062,807	0	361,753	117,400	74.0%	14.2%	6.7%	5.2%	1,541,960
PENNSYLVANIA	39	45	5,137,755	0	1,289,676	209,641	73.7%	14.9%	5.7%	5.6%	6,637,072
RHODE ISLAND	1	14	548,854	0	0	0	79.2%	12.0%	6.2%	2.7%	548,854
SOUTH CAROLINA	28	24	1,137,074	0	496,983	44,836	70.6%	16.5%	5.2%	7.7%	1,678,893
SOUTH DAKOTA	31	12	252,624	15,081	42,117	36,464	79.8%	12.6%	3.4%	4.2%	346,286
TENNESSEE	25	29	2,085,298	0	303,127	198,380	77.2%	12.7%	6.3%	3.7%	2,586,805
TEXAS	56	82	6,876,024	13,783	1,573,409	418,964	64.9%	17.5%	6.9%	10.7%	8,882,180
UTAH	13	20	739,975	30,894	3,910	28,419	68.2%	15.6%	6.9%	9.4%	803,198
VERMONT	9	9	271,419	0	30,872	16,325	77.9%	9.9%	7.7%	4.5%	318,616
VIRGINIA	21	23	2,595,420	0	721,085	76,724	68.0%	21.4%	7.2%	3.4%	3,393,229
WASHINGTON	22	37	1,957,773	0	698,205	107,794	72.1%	17.1%	7.3%	3.5%	2,763,772
WEST VIRGINIA	10	14	671,458	0	90,241	42,677	76.7%	18.1%	3.8%	1.4%	804,376
WISCONSIN	95	23	1,753,545	0	775,510	119,382	73.6%	14.5%	5.4%	6.6%	2,648,437
WYOMING	10	13	170,295	51,876	3,841	15,455	82.9%	10.5%	4.9%	1.7%	241,467
UNITED STATES	1,437 **		105,011,616	732,798	26,822,739	5,111,528	73.2%	14.6%	6.9%	5.3%	137,678,681
PUERTO RICO	2	10	0	0	995,205	132	42.6%	5.7%	1.8%	50.0%	995,337
VIRGIN ISLANDS	1	6	0	0	51,022	0	76.7%	0.0%	8.9%	14.4%	51,022
GRAND TOTAL	1,440 **	414	105,011,616	732,798	27,868,966	5,111,660	73.0%	14.5%	6.9%	5.6%	138,725,040

Source: National Exchange Carrier Association PSL Database

*The estimate for the number of long distance carriers serving a state equals the number of long distance carriers from the local study area with the maximum number of long distance carriers.

**This total number of operating companies overstates the actual number of operating companies because many operating companies serve more than one state. There are about 1,300 separate operating companies.

TABLE 6.5

PRESUBSCRIBED TELEPHONE LINES BY STATE AS OF DECEMBER 31, 1993

STATE	NUMBER OF TELEPHONE COMPANIES		BELL COMPANY LINES		OTHER COMPANY LINES		MARKET SHARES				TOTAL LINES
	LOCAL	LONG DISTANCE*	EQUAL ACCESS	NON-EQUAL ACCESS	EQUAL ACCESS	NON-EQUAL ACCESS	AT&T	MCI	SPRINT	OTHER CARRIERS	
ALABAMA	30	17	1,629,946	0	315,621	79,721	78.3%	12.5%	3.4%	5.8%	2,025,288
ALASKA	25	2	0	0	277,863	39,010	0.0%	0.0%	0.0%	100.0%	316,873
ARIZONA	13	46	1,916,662	24,570	33,286	91,536	68.1%	15.9%	7.9%	8.2%	2,066,054
ARKANSAS	29	17	797,831	1,424	250,738	122,265	81.2%	11.6%	3.2%	4.0%	1,172,258
CALIFORNIA	22	61	13,998,531	0	3,950,010	67,194	68.2%	17.1%	8.8%	5.8%	18,015,735
COLORADO	27	42	2,029,577	2,587	10,151	28,869	63.1%	20.0%	8.1%	8.7%	2,071,184
CONNECTICUT	2	23	0	0	1,856,122	0	80.2%	10.9%	5.6%	3.3%	1,856,122
DELAWARE	1	28	427,437	0	0	0	69.3%	20.1%	6.5%	4.1%	427,437
DISTRICT OF COLUMBIA	1	20	779,786	0	0	0	68.3%	20.9%	6.1%	4.7%	779,786
FLORIDA	13	44	4,924,578	0	3,040,162	61,177	74.9%	12.3%	7.2%	5.7%	8,025,917
GEORGIA	36	29	3,068,771	0	425,440	167,449	73.9%	15.0%	7.3%	3.8%	3,661,660
HAWAII	1	11	0	0	490,019	105,798	66.0%	12.5%	21.0%	0.6%	595,817
IDAHO	20	24	404,299	24	96,095	35,186	73.7%	15.0%	5.0%	6.3%	535,604
ILLINOIS	56	42	5,581,114	0	974,877	187,926	73.9%	13.7%	8.1%	4.3%	6,743,917
INDIANA	42	21	1,795,958	0	1,033,195	80,989	73.7%	13.3%	7.2%	5.8%	2,910,142
IOWA	153	18	898,370	27,348	401,483	88,127	75.0%	17.1%	5.1%	2.8%	1,415,328
KANSAS	39	18	1,124,468	0	84,763	141,320	74.1%	13.6%	7.7%	4.6%	1,350,551
KENTUCKY	19	20	1,012,717	0	663,811	60,444	77.4%	12.7%	3.7%	6.2%	1,736,972
LOUISIANA	20	27	1,904,740	0	65,443	81,251	73.8%	12.9%	4.1%	9.2%	2,051,434
MAINE	19	14	574,156	0	75,693	35,589	79.9%	12.4%	5.4%	2.3%	685,438
MARYLAND	2	24	2,855,171	0	0	5,204	68.0%	21.4%	6.2%	4.4%	2,860,375
MASSACHUSETTS	3	24	3,711,354	0	936	2,440	75.7%	13.3%	8.1%	2.9%	3,714,730
MICHIGAN	38	36	4,423,515	0	678,213	137,812	72.8%	15.1%	4.9%	7.2%	5,239,540
MINNESOTA	91	26	1,803,141	50,157	503,643	102,898	69.1%	17.9%	6.0%	7.0%	2,459,839
MISSISSIPPI	19	14	1,049,060	0	28,440	39,218	79.3%	13.2%	3.3%	4.2%	1,116,718
MISSOURI	44	26	2,102,446	1,243	499,075	208,151	74.3%	14.0%	6.8%	4.9%	2,810,915
MONTANA	16	21	300,126	37,722	66,396	31,350	79.7%	11.0%	3.7%	5.7%	435,594
NEBRASKA	42	13	454,981	10,293	323,945	73,499	68.1%	12.9%	5.2%	13.8%	862,718
NEVADA	13	18	223,253	22,779	598,961	10,389	70.2%	13.3%	9.3%	7.1%	855,382
NEW HAMPSHIRE	12	15	619,909	0	36,859	4,036	77.5%	12.0%	7.1%	3.4%	660,804
NEW JERSEY	3	46	5,049,073	0	156,032	7,832	76.4%	15.0%	4.6%	4.0%	5,212,937
NEW MEXICO	14	30	647,465	0	76,607	28,887	69.7%	17.4%	6.8%	6.1%	752,959
NEW YORK	44	46	9,488,732	51,193	1,001,997	81,259	71.3%	14.9%	8.0%	5.8%	10,623,181
NORTH CAROLINA	28	14	1,846,826	0	1,726,180	99,706	70.7%	12.6%	11.7%	5.0%	3,672,712
NORTH DAKOTA	24	17	227,818	14,068	11,156	84,956	80.9%	11.7%	3.2%	4.2%	337,998
OHIO	42	26	3,311,584	0	2,096,766	216,691	69.7%	14.9%	7.6%	7.8%	5,625,041
OKLAHOMA	39	32	1,244,633	101,585	190,005	96,451	75.7%	13.3%	4.2%	6.8%	1,632,674
OREGON	34	34	1,112,735	0	444,467	54,377	74.0%	12.7%	6.9%	6.5%	1,611,579
PENNSYLVANIA	39	50	5,243,378	0	1,407,661	126,481	71.8%	15.7%	5.8%	6.7%	6,777,520
RHODE ISLAND	1	18	550,593	0	0	0	77.7%	13.3%	6.0%	3.1%	550,593
SOUTH CAROLINA	28	24	1,170,808	0	537,386	23,557	69.4%	16.3%	4.6%	9.7%	1,731,751
SOUTH DAKOTA	31	19	266,663	9,039	50,980	28,575	76.4%	14.6%	3.8%	5.3%	355,257
TENNESSEE	25	28	2,170,100	0	392,832	132,840	76.2%	12.9%	6.0%	4.8%	2,695,772
TEXAS	56	98	7,278,749	7,647	1,785,956	300,270	63.6%	18.1%	6.6%	11.7%	9,372,622
UTAH	12	28	788,848	7,708	19,247	14,614	65.9%	16.2%	6.7%	11.2%	830,417
VERMONT	9	15	273,194	0	41,228	13,095	73.4%	12.7%	6.9%	7.0%	327,517
VIRGINIA	21	23	2,648,961	0	770,921	59,624	66.4%	22.8%	7.3%	3.5%	3,479,506
WASHINGTON	22	39	2,019,577	0	737,875	93,817	70.1%	17.7%	7.1%	5.1%	2,851,269
WEST VIRGINIA	10	13	680,771	0	108,379	26,578	75.3%	18.8%	3.8%	2.1%	815,728
WISCONSIN	94	20	1,815,289	0	816,991	106,311	72.0%	15.0%	6.2%	6.8%	2,738,591
WYOMING	10	16	197,542	32,054	7,667	11,925	79.5%	12.0%	5.1%	3.4%	249,188
UNITED STATES	1,434 **		108,445,236	401,441	29,161,573	3,696,694	71.4%	15.3%	6.9%	6.3%	141,704,944
NORTHERN MARIANA ISL.	1	2	0	0	13,367	0	0.0%	72.1%	0.0%	27.9%	13,367
PUERTO RICO	2	8	0	0	1,037,527	121	43.0%	6.6%	2.0%	48.4%	1,037,648
VIRGIN ISLANDS	1	6	0	0	53,321	0	75.6%	0.0%	9.5%	14.9%	53,321
GRAND TOTAL	1,438 **	436	108,445,236	401,441	30,265,788	3,696,815	71.2%	15.3%	6.9%	6.6%	142,809,280

Source: National Exchange Carrier Association PSL Database

*The estimate for the number of long distance carriers serving a state equals the number of long distance carriers from the local study area with the maximum number of long distance carriers.

**This total number of operating companies overstates the actual number of operating companies because many operating companies serve more than one state. There are about 1,300 separate operating companies.

TABLE 6.6

PRESUBSCRIBED TELEPHONE LINES BY STATE AS OF DECEMBER 31, 1994

STATE	NUMBER OF TELEPHONE COMPANIES		BELL COMPANY LINES		OTHER COMPANY LINES		MARKET SHARES				TOTAL LINES
	LOCAL	LONG DISTANCE*	EQUAL ACCESS	NON-EQUAL ACCESS	EQUAL ACCESS	NON-EQUAL ACCESS	AT&T	MCI	SPRINT	OTHER CARRIERS	
ALABAMA	30	30	1,688,830	0	354,830	50,389	77.5%	11.8%	3.2%	7.5%	2,094,049
ALASKA	25	2	0	0	287,845	41,657	0.0%	0.0%	0.0%	100.0%	329,502
ARIZONA	13	50	2,026,556	7,253	42,805	88,478	66.5%	15.4%	7.4%	10.7%	2,165,092
ARKANSAS	29	23	831,443	0	285,614	88,823	78.7%	10.9%	4.4%	6.0%	1,205,880
CALIFORNIA	22	63	14,680,359	0	4,231,154	61,052	67.2%	16.9%	8.2%	7.7%	18,972,565
COLORADO	27	56	2,104,657	159	14,296	27,722	61.7%	19.4%	7.6%	11.2%	2,146,834
CONNECTICUT	2	34	0	0	1,887,540	0	73.7%	10.9%	4.7%	10.7%	1,887,540
DELAWARE	1	38	440,811	0	0	0	70.4%	18.4%	5.6%	5.6%	440,811
DISTRICT OF COLUMBIA	1	26	776,849	0	0	0	68.2%	19.8%	5.7%	6.3%	776,849
FLORIDA	13	86	5,161,293	0	3,535,857	28,190	72.9%	12.8%	6.8%	7.5%	8,725,340
GEORGIA	36	60	3,252,835	0	489,239	146,400	72.5%	14.6%	7.4%	5.4%	3,888,474
HAWAII	1	15	0	0	515,541	73,958	64.4%	15.7%	18.9%	1.1%	589,499
IDAHO	20	28	421,686	28	114,107	20,676	72.0%	14.7%	4.8%	8.5%	556,497
ILLINOIS	56	56	5,832,542	0	1,023,812	133,136	72.2%	13.5%	7.8%	6.5%	6,989,490
INDIANA	42	27	1,872,311	0	1,046,928	60,939	73.9%	12.7%	6.5%	7.0%	2,980,178
IOWA	153	26	938,263	0	424,073	65,286	73.8%	16.8%	4.7%	4.7%	1,427,622
KANSAS	39	26	1,152,586	0	124,089	106,468	71.2%	13.2%	9.2%	6.3%	1,383,143
KENTUCKY	19	29	1,045,024	0	708,805	25,224	76.8%	11.6%	3.5%	8.2%	1,779,053
LOUISIANA	20	48	1,980,725	0	97,342	53,926	73.2%	12.2%	3.8%	10.8%	2,131,993
MAINE	19	20	596,076	0	99,934	12,801	78.4%	12.2%	5.7%	3.8%	708,811
MARYLAND	2	31	2,957,295	0	5,380	0	67.8%	20.3%	6.0%	6.0%	2,962,675
MASSACHUSETTS	3	34	3,878,707	0	945	2,570	74.7%	13.3%	8.1%	3.9%	3,882,222
MICHIGAN	38	37	4,596,556	0	701,813	114,592	70.2%	14.7%	5.8%	9.3%	5,412,961
MINNESOTA	90	37	1,829,851	2,060	543,262	81,563	67.0%	18.8%	5.6%	8.5%	2,456,736
MISSISSIPPI	19	22	1,093,730	0	41,694	30,079	77.5%	11.9%	2.9%	7.7%	1,165,503
MISSOURI	44	39	2,161,102	0	526,874	186,230	71.5%	13.1%	8.7%	6.7%	2,874,206
MONTANA	18	24	314,095	0	78,178	59,647	77.3%	11.3%	3.7%	7.7%	451,920
NEBRASKA	42	20	453,475	0	353,161	53,034	67.2%	13.5%	5.0%	14.3%	859,670
NEVADA	13	25	240,679	23,716	654,328	7,392	67.9%	13.7%	10.2%	8.3%	926,115
NEW HAMPSHIRE	12	23	648,304	0	38,149	2,953	76.5%	11.8%	7.3%	4.4%	689,406
NEW JERSEY	3	65	5,192,230	0	162,854	7,605	75.9%	14.4%	4.5%	5.2%	5,362,689
NEW MEXICO	14	37	652,564	0	89,490	16,688	66.4%	18.1%	6.7%	8.8%	758,742
NEW YORK	44	68	9,896,100	0	1,080,252	18,855	70.0%	14.9%	8.3%	6.8%	10,995,207
NORTH CAROLINA	28	33	1,946,670	0	1,857,035	47,936	69.5%	12.2%	10.7%	7.5%	3,851,641
NORTH DAKOTA	24	22	244,955	2,308	46,826	51,338	72.4%	13.2%	3.2%	11.2%	345,427
OHIO	42	38	3,450,198	0	2,179,439	188,520	69.9%	14.2%	7.0%	8.9%	5,818,157
OKLAHOMA	39	45	1,396,974	97,543	224,195	69,163	74.1%	11.9%	4.5%	9.6%	1,787,875
OREGON	34	38	1,150,615	0	480,667	42,308	73.0%	11.8%	7.0%	8.2%	1,673,590
PENNSYLVANIA	37	59	5,336,863	0	1,498,411	71,977	71.4%	14.5%	5.5%	8.6%	6,907,251
RHODE ISLAND	1	21	568,509	0	0	0	76.9%	13.2%	6.0%	3.9%	568,509
SOUTH CAROLINA	28	25	1,218,650	0	570,046	22,957	67.6%	15.2%	4.5%	12.7%	1,811,653
SOUTH DAKOTA	31	25	276,537	1,052	75,158	7,774	70.9%	14.6%	3.8%	10.7%	360,521
TENNESSEE	25	48	2,271,917	0	458,919	85,691	74.8%	12.4%	5.6%	7.2%	2,816,527
TEXAS	56	110	7,578,738	1,183	1,866,731	235,254	63.6%	17.0%	6.6%	12.8%	9,681,906
UTAH	13	36	833,136	1,381	23,126	15,266	65.2%	15.6%	6.4%	12.8%	872,909
VERMONT	9	18	285,163	0	46,719	9,163	72.0%	12.5%	6.2%	9.3%	341,045
VIRGINIA	21	31	2,759,830	0	836,620	24,655	65.5%	21.6%	7.3%	5.6%	3,621,105
WASHINGTON	22	42	2,098,178	0	785,472	87,263	69.2%	16.8%	7.0%	7.0%	2,970,913
WEST VIRGINIA	10	17	699,739	0	123,104	12,831	75.7%	16.5%	3.5%	4.3%	835,674
WISCONSIN	94	25	1,907,179	0	855,987	86,534	70.9%	14.5%	6.0%	8.7%	2,849,700
WYOMING	10	23	202,979	11,067	16,394	26,204	78.3%	12.0%	4.7%	5.0%	256,644
UNITED STATES	1,434 **		112,944,364	147,750	31,505,040	2,751,167	70.2%	14.9%	6.8%	8.1%	147,348,321
NORTHERN MARIANA ISL.	1	2	0	0	13,600	0	0.0%	74.3%	0.0%	25.7%	13,600
PUERTO RICO	2	10	0	0	1,064,902	115	42.8%	8.2%	2.3%	46.8%	1,065,017
VIRGIN ISLANDS	1	5	0	0	52,390	0	70.4%	0.0%	9.5%	20.1%	52,390
GRAND TOTAL	1,438 **	511	112,944,364	147,750	32,635,932	2,751,282	70.0%	14.8%	6.8%	8.4%	148,479,328

Source: National Exchange Carrier Association PSL Database

*The estimate for the number of long distance carriers serving a state equals the number of long distance carriers from the local study area with the maximum number of long distance carriers.

**This total number of operating companies overstates the actual number of operating companies because many operating compa serve more than one state. There are about 1,300 separate operating companies.

TABLE 6.7

PRESUBSCRIBED TELEPHONE LINES BY STATE AS OF DECEMBER 31, 1995

STATE	NUMBER OF TELEPHONE COMPANIES		BELL COMPANY LINES		OTHER COMPANY LINES		MARKET SHARES				TOTAL LINES
	LOCAL	LONG DISTANCE*	EQUAL ACCESS	NON-EQUAL ACCESS	EQUAL ACCESS	NON-EQUAL ACCESS	AT&T	MCI	SPRINT	OTHER CARRIERS	
ALABAMA	30	45	1,746,921	0	391,009	25,320	71.6%	13.3%	3.5%	11.6%	2,163,250
ALASKA	25	2	0	0	293,757	44,261	0.0%	0.0%	0.0%	100.0%	338,018
ARIZONA	13	70	2,116,329	663	124,903	23,201	62.3%	15.4%	8.3%	14.0%	2,265,096
ARKANSAS	29	39	857,814	0	349,773	36,026	73.1%	12.1%	5.1%	9.8%	1,243,613
CALIFORNIA	22	81	15,156,776	0	3,833,503	26,119	63.5%	18.0%	8.4%	10.0%	19,016,398
COLORADO	27	72	2,153,317	357	84,848	11,865	58.1%	18.5%	8.0%	15.4%	2,250,387
CONNECTICUT	2	46	0	0	1,951,014	0	61.1%	13.2%	5.3%	20.5%	1,951,014
DELAWARE	1	54	453,063	0	0	0	68.2%	18.1%	5.5%	8.3%	453,063
DISTRICT OF COLUMBIA	1	24	770,864	0	0	0	68.0%	19.4%	5.6%	7.0%	770,864
FLORIDA	13	117	5,388,768	0	3,678,434	28,623	69.5%	13.4%	7.0%	10.1%	9,095,825
GEORGIA	36	78	3,382,767	0	585,144	73,412	68.2%	15.1%	7.7%	9.0%	4,041,323
HAWAII	1	20	0	0	572,657	31,473	61.6%	16.8%	19.6%	2.0%	604,130
IDAHO	20	40	440,316	0	139,557	7,784	64.1%	14.8%	5.7%	15.4%	587,657
ILLINOIS	56	70	6,047,979	0	1,091,738	91,089	69.1%	14.6%	7.5%	8.8%	7,230,806
INDIANA	42	36	1,917,161	0	1,096,692	35,136	70.2%	13.7%	7.1%	9.0%	3,048,989
IOWA	153	42	972,569	0	458,661	34,382	68.5%	17.8%	4.9%	8.7%	1,465,612
KANSAS	39	44	1,194,050	0	171,437	62,753	65.0%	13.7%	10.3%	11.1%	1,428,240
KENTUCKY	19	48	1,081,453	0	770,043	15,202	70.2%	12.6%	3.6%	13.5%	1,866,698
LOUISIANA	20	66	2,038,922	0	127,960	29,437	67.3%	14.0%	3.9%	14.9%	2,196,319
MAINE	19	31	617,104	0	110,004	9,282	73.2%	12.9%	6.1%	7.9%	736,390
MARYLAND	2	29	3,009,576	0	5,580	0	65.7%	20.4%	6.2%	7.6%	3,015,156
MASSACHUSETTS	3	56	4,004,384	0	1,002	2,605	71.6%	14.2%	8.5%	5.7%	4,007,991
MICHIGAN	38	60	4,799,002	0	757,267	76,895	65.1%	16.1%	5.8%	13.0%	5,633,164
MINNESOTA	90	53	1,978,239	0	612,384	34,933	62.5%	19.6%	5.5%	12.3%	2,625,556
MISSISSIPPI	19	46	1,133,124	0	44,887	30,704	71.1%	14.9%	3.1%	10.9%	1,208,715
MISSOURI	44	56	2,239,269	0	571,077	138,514	66.5%	14.2%	9.6%	9.7%	2,948,860
MONTANA	18	33	324,453	0	104,983	37,138	70.4%	12.2%	4.7%	12.7%	466,574
NEBRASKA	42	33	492,446	0	380,182	34,734	62.6%	14.8%	5.6%	17.1%	907,362
NEVADA	13	26	262,418	17,671	690,277	5,528	64.2%	14.3%	11.9%	9.7%	975,894
NEW HAMPSHIRE	12	34	680,172	0	40,621	2,938	73.5%	12.6%	7.8%	6.1%	723,731
NEW JERSEY	3	87	5,363,069	0	172,533	6,670	73.2%	15.2%	4.5%	7.1%	5,542,272
NEW MEXICO	14	48	677,970	0	95,625	13,979	62.1%	18.0%	7.3%	12.6%	787,574
NEW YORK	44	99	10,111,610	0	1,140,447	5,542	66.5%	15.6%	8.5%	9.4%	11,257,599
NORTH CAROLINA	28	38	1,977,323	0	1,980,150	15,603	66.1%	12.5%	10.7%	10.6%	3,973,076
NORTH DAKOTA	24	29	248,509	0	64,612	37,887	65.1%	15.5%	3.8%	15.6%	351,008
OHIO	42	60	3,654,287	0	2,394,243	136,019	65.2%	15.2%	7.3%	12.3%	6,184,549
OKLAHOMA	39	59	1,443,340	74,763	246,101	54,646	66.9%	12.7%	5.9%	14.5%	1,818,850
OREGON	34	58	1,179,594	0	576,778	9,790	67.9%	11.9%	8.2%	11.9%	1,766,162
PENNSYLVANIA	37	84	5,427,882	0	1,529,527	40,791	68.6%	15.1%	5.7%	10.6%	6,998,200
RHODE ISLAND	1	31	582,654	0	0	0	73.8%	13.9%	6.3%	6.0%	582,654
SOUTH CAROLINA	28	42	1,261,631	0	617,457	1,277	62.5%	16.1%	5.0%	16.4%	1,880,365
SOUTH DAKOTA	31	39	293,420	0	78,033	5,820	64.3%	16.0%	4.1%	15.7%	377,273
TENNESSEE	25	74	2,366,159	0	529,279	44,872	70.0%	13.8%	5.8%	10.5%	2,940,310
TEXAS	56	121	7,347,626	1,257	2,055,329	127,856	64.3%	18.2%	1.6%	15.9%	9,532,068
UTAH	13	55	885,802	708	31,904	9,291	61.2%	15.3%	6.7%	16.8%	927,705
VERMONT	9	29	299,272	0	50,627	5,246	67.8%	13.9%	6.8%	11.5%	355,145
VIRGINIA	21	38	2,807,409	0	888,263	7,227	62.6%	22.0%	7.7%	7.6%	3,702,899
WASHINGTON	22	62	2,175,315	0	921,459	38,898	63.8%	16.0%	9.0%	11.2%	3,135,672
WEST VIRGINIA	10	22	705,200	0	135,553	3,630	72.3%	16.9%	3.9%	6.8%	844,383
WISCONSIN	94	38	1,959,838	0	947,640	24,828	67.6%	15.7%	5.9%	10.8%	2,932,306
WYOMING	10	34	220,990	0	23,013	22,106	71.1%	12.8%	5.5%	10.6%	266,109
UNITED STATES	1,434 **		116,248,156	95,419	0	0	66.5%	15.7%	6.8%	11.0%	151,422,874
NORTHERN MARIANA ISL.	1	2	0	0	13,600	0	0.0%	74.3%	0.0%	25.7%	13,600
PUERTO RICO	2	10	0	0	1,109,408	0	42.8%	8.9%	2.7%	45.6%	1,109,408
VIRGIN ISLANDS	1	5	0	0	55,295	0	67.0%	0.0%	11.4%	21.6%	55,295
GRAND TOTAL	1,438 **	583	116,248,156	95,419	34,696,270	1,561,332	66.3%	15.7%	6.8%	11.3%	152,601,177

Source: National Exchange Carrier Association PSL Database

*The estimate for the number of long distance carriers serving a state equals the number of long distance carriers from the local study area with the maximum number of long distance carriers.

**This total number of operating companies overstates the actual number of operating companies because many operating companies serve more than one state. There are about 1,300 separate operating companies.

PUBLIC VERSION

Customer Response Survey
Publication: Distribution of Equal Access Lines and Presubscribed Lines, November 1997

You can help us provide the best possible information to the public by completing this form and returning it to the Industry Analysis Division of the FCC's Common Carrier Bureau.

1. Please check the category that best describes you:

____ press
____ current telecommunications carrier
____ potential telecommunications carrier
____ business customer evaluating vendors/service options
____ consultant, law firm, lobbyist
____ other business customer
____ academic/student
____ residential customer
____ FCC employee
____ other federal government employee
____ state or local government employee
____ Other (please specify)

2. Please rate the report:

	Excellent	Good	Satisfactory	Poor	No opinion
Data accuracy	( )	( )	( )	( )	( )
Data presentation	( )	( )	( )	( )	( )
Timeliness of data	( )	( )	( )	( )	( )
Completeness of data	( )	( )	( )	( )	( )
Text clarity	( )	( )	( )	( )	( )
Completeness of text	( )	( )	( )	( )	( )

3. Overall, how do you rate this report?

Excellent	Good	Satisfactory	Poor	No opinion
( )	( )	( )	( )	( )

4. How can this report be improved?

5. May we contact you to discuss possible improvements?
Name:

Telephone #:

To discuss the information in this report, contact:
Jim Eisner or Katie Rangos at 202-418-0940

Fax this response to:

(202) 418-0520

OR

Mail this response to:

FCC/IAD
Mail Stop 1600F
Washington, DC 20554

Exhibit 11

Excerpted Pages from the Deposition of Mark Shlanta (taken June 3-4, 2015)

THIRD PARTY HIGHLY CONFIDENTIAL MATERIALS OMITTED

Exhibit 12

MIEAC Order, File No. W-P-C-6400
(rel. Aug. 22, 1990)

Before the
FEDERAL COMMUNICATIONS COMMISSION
Washington, D.C. 20554

In re the Application of	)	
	)	
MINNESOTA INDEPENDENT EQUAL ACCESS CORPORATION	)	
	)	File No. W-P-C-6400
For authority pursuant to Section 214 of the Communications Act of 1934 and Section 63.01 of the Commission's Rules and Regulations to lease transmission facilities to provide centralized equal access service to interexchange carriers in the State of Minnesota	)	

MEMORANDUM OPINION, ORDER AND CERTIFICATE

Adopted: August 21, 1990 **Released:** August 22, 1990

By the Chief, Domestic Facilities Division:

1. Minnesota Independent Equal Access Corporation (MIEAC or Applicant), a wholly owned subsidiary of Minnesota Equal Access Network Services, Inc. (MEANS),[1] has filed the above-captioned application pursuant to Section 214 of the Communications Act of 1934 (the Act), 47 U.S.C. § 214, and Section 63.01 of the Commission's Rules, 47 C.F.R. § 63.01. MEANS seeks authority to lease and operate transmission facilities in order to provide centralized equal access service and thereby to bring the benefits of equal access and competitive interexchange carrier services to the subscribers of approximately 86 independent local exchange telephone Companies (ILECs) serving 304 rural exchanges in the State of Minnesota. Comments were filed by Northwestern Bell Telephone Company (NWB), a subsidiary of US West and American Telephone and

---

1 MEANS also wholly owns two other related entities, Minnesota Equal Access Facility Corporation (MEAFCO), from which MIEAC will lease transmission facilities to provide centralized equal access services, and Minnesota Independent Interexchange Company (MIIC), which will be one of the toll carriers to offer competitive interstate and intrastate services to customers located in the exchanges employing MIEAC services. These entities will be referred to collectively as MEANS.

Telegraph Company (AT&T). Applicant filed a reply on April 11, 1989 and submitted an amendment to the application on April 16, 1990.[2]

Application

2. MEANS is owned by ten ILECs.[3] It states that stock in MEANS will be available to all ILECs who participate in the provision of centralized equal access on Applicant's facilities. The leased facilities will consist of a combination of DS-1 digital channels provided over fiber optic facilities and a digital access tandem switch to provide equal access features and traffic aggregation at a centralized location in the Minneapolis - St. Paul (Twin Cities), Minnesota, area. Applicant states the facilities will be leased from MEAFCO or from non-affiliated entities able to provide the service at a lower cost.[4]

3. Applicant plans to provide equal access service to a third separate corporate affiliate, MIIC, which will be one of the interexchange carriers (IXCs) that will provide competitive interstate and intrastate interexchange services to other subscribers of the ILECs served by the Applicant. Applicant states it will offer Feature Groups A, B and D switched access at its centralized equal access tandem switch in the Twin Cities area, and will also make equal access available near the existing toll centers listed in its application.[5] It further states the centralized equal access switch will provide a variety of other switching, recording and related services for 800 access, WATS, WATS-type services, and future network access services such as Signaling System 7 Service.

4. Applicant notes that the Commission previously has recognized that the provision of centralized equal access to rural areas served by independent telephone companies is likely to bring about equal access far sooner than if

---

2 The amendment is discussed infra, at para. 9.

3 Applicant states these ILECs are: Arvig Enterprises, Inc, Hickory Tech Corporation, Eckles Utilities, Inc, Ollig Utilities Company, Park Region Mutual Telephone Company, Lakedale Telephone Company, Garden Valley Telephone Company, Sherburne County Rural Telephone Co., R.D. Communications, Inc., and Arvig Telcom, Inc..

4 According to applicant, MEAFCO will lease, construct or purchase the transmission facilities, based upon which alternative appears to be most economical. Applicant's costs in leasing transmission services from MEAFCO are discussed infra, paragraph 7.

5 Applicant states these toll center locations are: Brainerd, Duluth, Fargo, Grand Forks, Minneapolis, Owatonna, Rochester, St. Cloud, Wadena and Windom. Application at Attachment 3.

ILEC end offices are converted individually.[6] It states that its proposal will bring the benefits of equal access to over 240,000 rural subscribers.[7] Applicant stresses that it will incorporate structurally separated affiliates in order to address fully regulatory concerns about cost shifting and cross-subsidy.[8]

5. Applicant states that these separate corporate affiliates will engage in transactions with Applicant and will engage in other telecommunications related businesses.[9] Specifically, MEAFCO may provide the Applicant (by lease) facilities for the provision of centralized equal access, consisting of fiber optic cable to connect the toll center locations upon which the participating ILEC traffic homes, with the centralized equal access switch in the Twin Cities, also to be leased from MEAFCO. Applicant states MEAFCO may lease capacity to MIIC to provide competitive interexchange services; it also may lease available capacity to unaffiliated IXCs on a non-discriminatory basis to connect their IXC points of presence (POPs) to Applicant's network interconnection points.

6. Applicant states the proposed fiber network will utilize existing toll center locations upon which the central offices of the participating ILECs home, and will link those end offices with the central access tandem switch. According to Applicant, this arrangement will allow IXCs to take advantage of existing points of presence which may be located near particular toll centers. Thus, Applicant states, the network will provide IXCs with the option to interconnect at the centralized equal access tandem, or near existing toll center locations.[10]

7. MEANS states that the term of the lease for digital and switching capacity from MEAFCO is initially set for 5 years, with a renewable term of 2 years. The lease rates for transmission capacity will consist of a mileage

---

6 Application at 5 citing, Memorandum Opinion, Order and Certificate (Indiana Switch Access Division), Mimeo No. 3652, released April 10, 1985, File No. W-P-C-5671, at para. 23, aff'd on recon., 1 FCC Rcd 634 (November 14, 1986); Memorandum Opinion, Order and Certificate (Iowa Network Access Division) DA, 88-293, released February 29, 1988, File No. W-P-C-6025 at paras. 22-23; Memorandum Opinion, Order and Certificate (Contel of Indiana, Inc.), 3 FCC Rcd 4298 (Common Carrier Bureau 1988) at paras. 25-27.

7 Application at 6.

8 Id.

9 Id. at 8.

10 Application at 13.

rate of 45 cents per circuit mile per month,[11] and fixed monthly rates of $198.00 per DS-1 termination.[12]

8. Applicant states it also intends to offer centralized equal access on an intrastate basis. It notes it is concurrently seeking approval from the Minnesota Public Utilities Commission (MPUC) to offer such services on an intrastate basis.[13]

9. Following hearings before the MPUC, MEANS filed an amendment to its application on April 17, 1990.[14] The amendment reflects the following changes:

> 1. Letters of intent to participate in the centralized equal access project were received from three additional telephone companies;
>
> 2. ILECs will be permitted to provide equal access interconnection at their end offices;
>
> 3. Interstate terminating access will be provided on a voluntary, rather than mandatory, basis;[15]

---

11 Applicant subsequently determined that there is a substantial amount of fiber optic transmission capacity deployed, or planned to be deployed, throughout the State of Minnesota. Amendment to application at 11. On the basis of this new information, Applicant now believes that substantial portions of its necessary transmission facilities can be leased at a cost of approximately 15 cents per circuit mile per month. Id.

12 Application at 16.

13 Application at 22.

14 The amendment reflects changes in circumstances and facts since the filing of the application. It was served on all commenting parties in the proceeding. No further pleadings were filed in response to the amendment. In accordance with 47 C.F.R. § 63.50, the amendment is accepted and made a part of the application.

15 Applicant states it originally believed that mandatory terminating access was required to ensure that each IXC pays its accurate share of terminating access charges. Applicant has become aware during the MPUC certification proceeding that US West is now able to furnish ILECs with call records for terminating traffic. See Amendment to Application at 7.

4. Originating Feature Group A and Feature Group B service will be available at suitably equipped end offices of the participating ILECs, as well as at Applicant's access tandem switch and at toll transfer points;

5. The access tandem switch to be leased by Applicant from MEAFCO, will be accounted for by Applicant as a capital lease;

6. The fiber optic transmission facilities to be leased by MEAFCO to Applicant can be acquired by MEAFCO at substantially lower costs than previously estimated; and

7. Applicant's maximum rate for originating traffic during its first year of operations has been reduced to 0.99 cent per minute of use.

In addition, Applicant submitted a study of the cost of converting the end offices of its participating ILECs to equal access.[16]

Comments and Discussion

10. AT&T states that although the MEANS proposal reflects significant improvements[17] over the proposals filed in Indiana Switch Access Division[18] or Iowa Network Access Division,[19] two issues should be resolved before the Commission can find that the public interest would be served by granting the application. First, AT&T states it is critical for IXCs and their customers that the proposed access arrangement provide technical features and capabilities normally associated with full equal access and not degrade existing switched services. For example, AT&T notes that the application does

---

16 MEANS Amendment to Application at Attachment 13. MEANS notes that the comparative cost study was previously filed with the MPUC in the parallel state proceeding.

17 AT&T notes, for example, that MEANS offers IXCs the option of interconnecting with the MEANS access network at either the access tandem or at existing toll center locations; IXCs will be able to obtain fiber optic capacity from a separate corporate affiliate, MEAFCO, to reach interconnection points in the access network; MEANS volunteers to file semi-annual reports with the Commission detailing the amount of capacity leased and used; and applicant will lease capacity from non-affiliated entities who are able to satisfy transmission requirements at a lower cost than new construction. AT&T Comments at 2, note 3.

18 See Indiana Switch Access Division, supra n.6.

19 See Iowa Network Access Division, supra n.6.

not indicate whether all features typically available under Feature Group D access (e.g., "10XXX" dialing) would be uniformly available, whether end users would continue to have unencumbered access to AT&T's operator services and international network, and whether end users would be subject to additional post-dialing delay as a result of the proposed centralized equal access arrangement. MEANS states it has no objection to AT&T's request that additional technical data on its switch be filed with the Commission in the tariff review process.[20] It further responds that its centralized equal access offerings will be fully consistent with the equal access obligations applicable to independent telephone companies (ITCs) as set forth in the Commission's Phase III ORDER, or as those policies may evolve.[21] AT&T has not demonstrated that Applicant's proposed network does not satisfy any Commission policy or objective. Moreover, Applicant expresses a willingness to provide the type of technical information during the tariff review process which we have requested in other equal access proposals.[22] Therefore, in the interstate tariff proceeding, we expect MEANS to provide information on the technical characteristics of its tandem switch, including reliable measurements of post-dialing delay and certification of any impact on access to operator services. Based on the record before us currently, there is no reason to believe MEANS' approach will not be fully consistent with Commission requirements.

11. Second, AT&T notes that although Applicant states that centralized equal access produces savings when compared to equal access conversion at the individual end office level and that its proposal would bring the benefits of equal access to subscribers far sooner than would conversion at the end office level, MEANS supplies no data to support its claims.[23] AT&T suggests that the Commission should require MEANS to provide additional information concerning the cost of implementing equal access in the participating ITCs end offices.[24] Initially, Applicant replied that this information has not been developed by MIEAC because these costs have no comparable relationship with the costs of centralized equal access as proposed.[25] However, the amendment to the application included a study of the cost of converting the end offices

---

20 MEANS Reply at 6.

21 MEANS Reply at 7, citing Memorandum Opinion and Order, in CC Docket No. 88-287 (Contel Service Corporation revisions to Tariff FCC No. 1), DA 89-317, released March 20, 1989.

22 See Contel of Indiana, supra n.6 at para. 25.

23 AT&T Comments at 4.

24 Id. at 5.

25 MEANS Reply at 8.

of its participating ILECs to equal access.[26] The study was conducted by surveying the participating ILECs with respect to the nature and extent of the end office facilities they would have in place at the end of 1990, and employing average price estimates obtained from equipment vendors to determine the cost of upgrading such facilities to equal access.[27] Applicant states that the study found that its proposed system would enable customers of the participating ILECs to enjoy equal access more quickly and at no greater cost than end office conversion.[28] AT&T filed no comments challenging Applicant's cost study. AT&T's argument that the application was incomplete for lack of comparative data is now moot.

12. NWB states it does not oppose MEANS' application insofar as it seeks authority to lease and operate facilities to provide equal access capabilities and other services to ITCs in Minnesota that choose to participate.[29] However, NWB notes that seventy percent (70%) of the traffic that will traverse the proposed MEANS network will be intrastate traffic; the majority of that traffic (approximately 60%) is intraLATA traffic which NWB today carries as the "designated carrier" in Minnesota.[30] It further notes that under the MEANS proposal, if a toll carrier were to choose to terminate calls to a MEANS participant's exchange, MEANS would, nonetheless, require mandatory transport of those calls to its Twin Cities tandem, to be switched and back-hauled to those original toll centers. NWB reiterates that, for performing this additional and unnecessary transport and switching, MEANS will assess toll carriers the same charge it will levy if the toll traffic is terminated directly at its Twin Cities tandem. NWB argues that although the Commission did not find such mandatory switching and routing requirements unreasonable in its ruling in Iowa Network Access Division, the MPUC may have reason to disagree in its own review of MEANS' proposal. NWB urges the Commission to defer to the MPUC's initial consideration of the MEANS proposal.[31]

---

26 MEANS Amendment to Application at Attachment 13.

27 Amendment to Application at 13.

28 Id.

29 NWB Comments at 1.

30 NWB states that the MPUC named NWB the designated or primary toll carrier within the five subject Minnesota LATAs for an interim period currently sheduled to expire in August 1990. Prior to that expiration date, the MPUC will determine whether its interim designated carrier plan should be extended or whether equal access should be made available under some other arrangement. See Summary Investigation into IntraLATA Toll Access Compensation for Local Exchange Carriers Providing Telephone Service Within the State of Minnesota, MPUC Docket No. P-999/CI-85-582, issued Nov. 2, 1987.

31 NWB Comments at 3.

However, NWB's Comments were filed prior to Applicant's amendment to its application. The amendment states that:

> Applicant's initial proposal required "that toll traffic originating from, and terminating to, the participating ILECs' exchanges transit the centralized equal access tandem for ticketing and related functions". (citation omitted).
>
> Applicant is modifying this proposal to indicate that it will provide interstate and intrastate terminating access on a voluntary, competitive basis. IXCs will have the option to use Applicant's terminating tandem services, U.S. West's terminating services, Feature Group A and B arrangements, and/or their own trunks to complete calls to customers of the participating ILECs. Applicant will charge IXCs only for those minutes of use which they choose to terminate over the proposed system.[32]

NWB filed no comments in response to the amendment, and it appears that NWB's concerns have been alleviated by the amendment to the application, which eliminates the routing requirement.

13. NWB also argues the Commission should defer acting on the application until the MPUC reviews NWB's designation as the state's primary toll carrier. The record demonstrates that the application, the amendment to the application, NWB's comments and MEANS's Reply were all served upon the Governor of Minnesota. Neither Minnesota nor the MPUC has filed comments in response. NWB itself notes that in naming NWB the exclusive designated carrier during the interim period, the MPUC did not preclude other exchange or toll carriers from competing with the designated carrier.[33] NWB has not demonstrated that the public interest requires deferring action on the application until MPUC acts on the MEANS proposal. However, the MPUC is considering intrastate aspects of the MEANS network in a pending proceeding.[34] In order to assure that resolution of the intrastate issues attendant upon MEANS' Section 214 application are resolved in a manner consistent with federal approval, the authorization will be conditioned on the approval by appropriate state agencies of the MEANS network, to the extent state action

---

32 Amendment to the Application at 6-7.

33 NWB Comments at 3 citing Minnesota Toll Access Compensation Order at 15.

34 Hearings before the MPUC for state certification for the subject centralized equal access service concluded on March 14, 1990. According to applicant the MPUC is expected to issue a decision by early September, 1990. See Amendment to Application at 2.

is required, without modifications that materially affect the relative amounts of inter and intrastate usage or other representations made herein.[35]

14. Public Interest. No party to the proceeding argues that the proposed MEANS network is not in the public interest.[36] AT&T states that it supports the efforts of ITCs to promote the reasonable availability of equal access and interexchange carrier competition.[37] NWB states it does not oppose MEAN's application insofar as it seeks authority to lease and operate facilities to provide equal access capabilities and other services to independent telephone companies in Minnesota.[38] The Commission previously has recognized the apparent advantages to sparsely populated communities by the availability of competition in the interexchange market fostered by equal access networks.[39] The record demonstrates that Applicant's proposal potentially will bring the benefits of equal access to over 240,000 rural subscribers. Applicant states that it will have the advantage of the most optimum mix of leased, purchased and/or constructed fiber optic facilities in order to maximize the efficient use of facilities, and it will incorporate structurally separated affiliates in order to address fully regulatory concerns about cost shifting and cross-subsidization.[40] In addition, by eliminating mandatory routing of traffic through Minneapolis, as proposed in its initial application, Applicant has demonstrated its willingness to incorporate sufficient flexibility into its network to warrant increased efficiency and reduce costs to customers. We find generally that, subject to the condition discussed supra, the public convenience and necessity will be served by grant of this proposal.

---

35 Similar conditions have been imposed in other equal access proposals. See supra n.6.

36 See NWB Comments at 1, AT&T Comments at 1.

37 AT&T Comments at 1.

38 NWB Comments at 1.

39 See Indiana Switch Access Division, supra n.6 at para. 17.

40 Amendment to Application at 6.

III. Conclusion

15. The issues raised by AT&T and NWB have been addressed by the Applicant. In most instances the suggestions of the commenters have been incorporated by MEANS into its unopposed amendment to its application.[41] MEANS states that it intends to file further technical data in tariff proceedings. It also states that it places no restrictions upon participating ILECs that would prevent or discourage them from converting their individual end offices to equal access; it notes that users may utilize Applicant's proposed system as an access tandem for the converted office.[42] Applicant also has determined that originating Feature Group A service will be made available to IXCs at end offices of participating ILECs (without MIEAC's charge) as well as at the access tandem switch and at toll transfer points.[43] Applicant estimates that substantial portions of its necessary transmission facilities can be leased at a cost of approximately 15 cents per circuit mile per month.[44] Based on these assurances and all other information supplied by MEANS in support of its application, we believe that constructing and leasing facilities for the aggregation of equal access traffic in Minnesota as proposed is in the public interest.

16. Accordingly, IT IS CERTIFIED, that the public convenience and necessity does require and will require the leasing and operation of the facilities specifically proposed in Application File No. W-P-C - 6400. Therefore, IT IS ORDERED, That MEANS IS HEREBY AUTHORIZED to lease and operate the facilities as proposed in the captioned application.

17. IT IS FURTHER ORDERED, that grant of the application provided for herein IS SUBJECT TO THE FOLLOWING CONDITIONS:

> That the Minnesota Public Utility Commission or other state agency has issued any necessary approvals relating to the subject application, without requiring modifications that materially affect the relative amounts of inter and intra-state usage of the proposed system or other representations made in the application.

---

41 Applicant states that the proposed route encompasses points in Minnesota and North Dakota. The nature of the traffic is expected to be both intrastate and interstate in nature.

42 Amendment to Application at 5.

43 Amendment to Application at 8.

44 Amendment to Application at 11.

18. This order is issued under Section 0.291 of the Commission's rules, 47 C.F.R. § 0.291, and is effective upon its release.[45] Failure of MEANS to decline this authorization as conditioned within thirty-one days from the release date will be construed as formal acceptance.

James R. Keegan
Chief, Domestic Facilities Division
Common Carrier Bureau

---

45 See also Sub-Delegation of Authority, 85 FCC 2d 1021 (1981).

Re: Application of Minnesota Independent Equal Access Corporation, File No. W-P-C-6400, Memorandum Opinion, Order and Certificate adopted Aug. 21 and released Aug. 22, 1990 by the Chief, Domestic Facilities Divn.

Original of grant furnished to applicant's counsel, Blooston, Mordkofsky, Jackson & Dickens (picked up 8/22/90).

Copies to: Randall S. Coleman, US West, Inc. (picked up 8/22/90).
Barbara Beerhalter, Chairman, Minnesota PUC (mailed 8/22/90).
Francine J. Berry, AT&T (mailed 8/22/90).
David P. Condit, AT&T id.
Doreen Stagnaro-Green, AT&T id.
Tom Elcan, Tariff Divn. (CCB correspondence, 8/22/90)

(Copy picked up by Lew Moniz of AT&T 8/23/90.)

Exhibit 13

Iowa Network Article, Des Moines Register (Mar. 29, 2016)

Iowa Network Services rebrands with plans to grow

Matthew Patane , mpatane@dmreg.com 10:00 a.m. CT March 29, 2016

(Photo: Aureon/Special to the Register)

A 27-year-old Iowa company that started as a way to serve the state's local phone companies is giving itself a new name with eyes on growing its footprint in Iowa and the Midwest.

Iowa Network Services announced Tuesday that it is consolidating its businesses under one name, Aureon. The new moniker will replace the names of INS and those in its "family of companies," which include technology, human resources and other business services firms.

"While we have one segment of the business, the telecom (division), that's challenged to stay where it's at, the others are showing significant growth," CEO Ron Keller told the Register in an interview. "Our strategic objective is to be doubling in size the next five years."

ADVERTISEMENT

Watch now

Based in West Des Moines, the company has about 600 full-time employees and about 150 part-time employees, Keller said. He said Aureon plans to focus its growth in Iowa and the Midwest initially.

The process is the latest step INS has taken to diversify its business into providing more than just telecommunications connections. Specifically, it started acquiring ways to provide business support to small firms looking to outsource services like human resources, payroll or call centers.

ADVERTISING

inRead invented by Teads

Lisa Shimkat, statewide director of the Iowa Small Business Development Center, said small business may look to outsource those services since doing them in-house can prove too costly or inefficient.

"For a small business owner, hiring a full-time HR person may not be financially feasible because you may not have enough employee needs to justify a full-time employee," Shimkat said.

Formed and owned by more than 120 of Iowa's local telecommunications providers, INS started as a way to connect those providers with long-distance carriers. The company eventually branched out into operating a fiber network to provide Internet service.

Shifts in the telecommunications industry, such as changing price structures and moves away from landline services, forced INS to look for new businesses to branch into, Keller said.

"Outside consultants have characterized the telecommunications industry as a melting ice cube: It's getting smaller and smaller and smaller unless you're one of those companies who is actively involved in merger and acquisition activity," Keller said.

Shrinking populations in Iowa's rural areas — INS' main source of customers — also prompted a need for diversification, he said.

"Fighting demographics is never easy," Keller said.

PUBLIC VERSION

INS, now Aureon, has been on a buying spree since 2008 when it acquired technology provider Alliance Technologies.

The company purchased employment service provider Merit Resources in 2013 and call center company Caleris in 2014. Subsidiaries also made their own purchases, such as when Merit Resources acquired Portico Staffing in 2015.

Those acquisitions created the need to find a name that would unify the company's divisions under one brand, Keller said.

"The value of having a brand new name like this is, it is an empty vessel," Keller said. "It’s given us the opportunity to revisit who we are and what we’re doing and a chance to go back out and visit with our existing clients and create an entirely new understanding" of the company.

Read or Share this story: http://dmreg.co/1MPV72K

Exhibit 14

Aureon Website
(“Technology,” “HR,” and “Contact Center”)

https://aureon.com/ | Technology, HR & Contact ...

File Edit View Favorites Tools Help | Convert | Select

CONTACT US | CAREERS | CLIENT SUPPORT / HELP | LOGIN

AUREON™

TECHNOLOGY | HR | CONTACT CENTER | OUR CULTURE

IT SOLUTIONS
Support services, cloud/hosting, security, hardware and web

COMMUNICATIONS
Voice, Video, Data

CHANNEL PARTNER PROGRAM
Agent Program providing a full range of Technology services

WHOLESALE SERVICES
Network Transport & Management, Wholesale Internet, Voice

SENIOR LIVING
Solutions for the Senior Living industry

READ MORE

THE AUREON STORY

YOUR HR RESOURCE

OUR CULTURE

WE ANSWER THE CALL

HOW WE GOT HERE

WE ENABLE YOU TO FOCUS ON WHAT YOU DO BEST

At Aureon, we allow organizations to focus on what they do best by equipping and supporting them with a full suite of business solutions, encompassing everything from technology to HR to contact center — all under one roof. As your trusted partner, we help you focus on your core business, while we take care of the rest.

A BOLD, NEW APPROACH TO THE OUTDATED OUTSOURCING MODEL

We know our customers and their needs, so we are able to envision a better solution — one designed to put the

https://aureon.com/technology

https://aureon.com/ | Technology, HR & Contact ...

File Edit View Favorites Tools Help | Convert | Select

CONTACT US | CAREERS | CLIENT SUPPORT / HELP | LOGIN

AUREON™

TECHNOLOGY | HR | CONTACT CENTER | OUR CULTURE

PROFESSIONAL EMPLOYER ORGANIZATION
A dedicated HR partner with a fully bundled solution

ADMINISTRATIVE SERVICE OFFERING
A customizable bundled HR solution to fit your needs

STAFFING SERVICES
Finding great employees for great organizations

LEADERSHIP AND TALENT DEVELOPMENT
Strategic leadership and talent development partner

SENIOR LIVING
Solutions for the Senior Living industry

TECHNICALLY SPEAKING

OUR CULTURE

THE AUREON STORY

WE ANSWER THE CALL

YOUR HR RESOURCE

HOW WE GOT HERE

WE ENABLE YOU TO FOCUS ON WHAT YOU DO BEST

At Aureon, we allow organizations to focus on what they do best by equipping and supporting them with a full suite of business solutions, encompassing everything from technology to HR to contact center — all under one roof. As your trusted partner, we help you focus on your core business, while we take care of the rest.

A BOLD, NEW APPROACH TO THE OUTDATED OUTSOURCING MODEL

We know our customers and their needs, so we are able to envision a better solution — one designed to put the

https://aureon.com/hr-solutions

https://aureon.com/hr-solutions

HR Solutions & Services, PE...

File Edit View Favorites Tools Help

Convert Select

CONTACT US CAREERS CLIENT SUPPORT / HELP LOGIN

AUREON™

TECHNOLOGY HR CONTACT CENTER OUR CULTURE

TECHNICAL SUPPORT
Customized technical support solutions

CUSTOMER CARE
Inbound Contact Center Services

IT SERVICE DESK
IT Help/Service Desk

SOCIAL MEDIA MODERATION
Social Media and User Generated Content moderation

SENIOR LIVING
Solutions for the Senior Living industry

HR SOLUTIONS

You went into business to provide a product or service. To pursue your passion. As your organization grows, so do the responsibilities and commitments that take you away from that focus. At Aureon HR, we provide a comprehensive suite of services and a cloud-based Aureon HRis technology to simplify employment, so you can refocus on your passion.

YOUR HR PARTNER

As an accredited **Professional Employer Organization** (PEO), Aureon HR provides services that ease the employment burden for small to medium-sized businesses and **senior living** **ations**. We offer full-service HR bundles that cover all of

https://aureon.com/contact-center

CONTACT OUR SALES TEAM

Please use the form below to contact us.

Exhibit 15

INS 2004 Tariff Filing
(filed June 24, 2004)

PUBLIC VERSION

McGuireWoods LLP
Washington Square
1050 Connecticut Ave N.W.
Suite 1200
Washington, DC 20036-5317
Phone: 202.857.1700
Fax: 202.857.1737
www.mcguirewoods.com

McGUIREWOODS

Filed Pursuant to
§ 204(a)(3) of the
Communications Act
on 7 Days' Notice

June 24, 2004

Marlene H. Dortch
Office of the Secretary
Federal Communications Commission
445 Twelfth Street, S.W.
Washington, D.C. 20554

Attention: Wireline Competition Bureau

Transmittal No. 22

FRN: 002-5807-10
Iowa Network Services, Inc.

FRN: 005-8579-17
McGuireWoods LLP

Dear Ms. Dortch:

The accompanying 2004 Annual Access Tariff Filing of Iowa Network Services, Inc. ("INS"), effective July 1, 2004, is sent to you for filing in compliance with the requirements of the Communications Act of 1934, as amended. This tariff filing consists of the following Check Sheets:

Tariff F.C.C. No.	Check Sheet Revision No.
1	18th Revised Page 1
	5th Revised Page 1.1

This 2004 Annual Access Tariff Filing consists of the cost support material required by *In the Matter of July 1, 2004 Annual Access Charge Tariff Filings,* Order, 19 FCC Rcd 7038 (2004) and Order, 19 FCC Rcd 7047 (2004) (collectively the "*Tariff Orders*"). Pursuant to the attached study for the test year ending June 30, 2005, INS is reducing its switched transport rate.

As required by the *Tariff Orders*, INS is submitting its 2004 Annual Tariff Review Plan and associated tariff changes electronically, using the Commission's Electronic Tariff Filing System ("ETFS"). The statutory processing fee in the amount of $695.00 is being hand-delivered today to the Federal Communications Commission (Tariff Filings, P.O. Box 358150, Pittsburgh, Pennsylvania 15251-5150) along with the original transmittal letter and FCC Form 159.

In addition to filing this letter with the ETFS, INS is sending separate courtesy copies of the TRP to Raj Kannan and the Commission's Duplication Contractor, Qualex International.

Acknowledgement and date of receipt of this filing is requested. A duplicate copy of this letter is provided for this purpose.

Should you have any questions concerning this matter, please contact James U. Troup at 202-857-1700.

Sincerely,

/s/

James U. Troup

Counsel for
Iowa Network Services, Inc.

Attachments

cc: Raj Kannan, FCC Pricing Policy Division
FCC Reference Information Center
Qualex International

PUBLIC VERSION

IOWA NETWORK SERVICES, INC.

IOWA NETWORK ACCESS DIVISION

DESCRIPTION AND JUSTIFICATION

COST SUPPORT MATERIAL

TARIFF REVIEW PLAN

JULY 1, 2004 ANNUAL ACCESS CHARGE TARIFF FILING

JUNE 24, 2004

PUBLIC VERSION

IOWA NETWORK ACCESS DIVISION

INTERSTATE ACCESS TARIFF FILING

PROSPECTIVE PERIOD
JULY 1, 2004 - JUNE 30, 2005

INDEX

Section	Description
	Transmittal Letter
1	Introduction, Overview and Rate Development
2	Development of Switched Transport Charge and Study Period Projected Access Minutes
3	Projected Revenue Requirement Summary - Total Interstate (Part 69)
4	Projected Part 36 Revenue Requirement Summary
5	Projected Part 64 Revenue Requirement Summary
6	Tariff Review Plan (TRP)

IOWA NETWORK ACCESS DIVISION

INTRODUCTION, OVERVIEW AND RATE DEVELOPMENT

INTRODUCTION

This filing supports revisions to Iowa Network Access Division Tariff F.C.C. No. 1 in accordance with the Federal Communications Commission's (FCC) Order, July 1, 2004 Annual Access Charge Tariff Filings, 19 FCC Rcd 7047 (2004). This Order establishes procedures for the 2004 filing of annual access charge tariffs and Tariff Review Plans (TRPs). The requirements for summary cost support material to support the annual access charge filings to be submitted on or before June 24, 2004 are presented in the Commission's Order, In the Matter of Material to be Filed in Support of 2004 Annual Access Tariff Filings, 19 FCC Rcd 7038 (2004).

This 2004 Annual Access Charge Tariff Filing covers the scheduled effective period from July 1, 2004 through June 30, 2006. This documentation volume contains the introduction, overview, rate development narrative, access rate development and corresponding cost support material to be filed with the FCC on June 24, 2004.

OVERVIEW

Schedule A of Section 2 presents a summary of the proposed rate to be effective July 1, 2004. The Company proposes to implement a switched transport rate of $0.01031 effective July 1, 2004 representing a reduction of $0.00014 from its existing switched transport rate. The Company's proposed switched transport rate of $0.01031 per access minute is projected to generate a return of 11.25% on interstate investments for the projected twelve-month period ending June 30, 2005.

For the year 2003, Iowa Network Access Division (INAD) earned a return of 4.21% on interstate investment. INAD experienced a return of 3.69% for the 2001/2002 monitoring period. During this period, the FCC authorized a maximum rate of return for interstate access operations of 11.50% with a target of 11.25%.

Interstate access minutes grew at a rate of 7.83% during 2003 to 831,287,417 from 770,906,630 in 2002. During the year 2002, INAD recorded interstate traffic growth of 1.45% over the year 2001. For the test period ending June 30, 2005, INAD is projecting interstate access minutes of 876,231,538, representing an increase of 2.32% over projected access minutes of 856,381,84 for the period ending June 30, 2004 and an increase of 5.41% compared with actual interstate access minutes for the year 2003. The lower than normal increase in interstate

traffic for the projected test period results primarily from the reduction of wireless minutes terminated by interexchange carriers over Feature Group D toll trunks. Several wireless carriers have requested direct interconnection with INS that effectively removes interstate traffic from the network and replaces it with interconnection traffic to be billed in accordance with interconnection agreements.

Since 2000, INS has implemented a network modernization program that provides full redundancy and protection for its equal access network to interexchange carriers serving rural Iowa. During the years 2003 and 2004, the Company completed upgrades to its fiber ring network that connects all major traffic routes throughout Iowa and expanded the capacity of its existing equal access switches to handle greater peak traffic loads. During 2004, INAD will update its equal access switch to comply with the FCC's requirements for Local Number Portability (LNP). INAD is also planning significant modifications to its accounting and billing applications and its computer systems and software for improved network monitoring and security. To date, INAD's efforts to construct and operate an efficient equal access network coupled with increases in interstate access minutes have enabled the Company to maintain or lower its centralized equal access rate, while greatly improving services to interexchange carriers.

The proposed tariff rate of Iowa Network Access Division is targeted to generate a return of 11.25% on investment for the test period ended June 30, 2005. The cost support material of Iowa Network Access Division has been developed using procedures prescribed by the Federal Communications Commission as follows:

A) Financial reporting is in accordance with the Uniform Systems of Accounts and Financial Reporting Requirements of Class A and Class B Telephone Companies, CC Docket 78-196 (Part 32 Order).

B) Jurisdictional allocation is in accordance with Federal Communications Commission's Rules adopted in CC Docket Nos. 78-72, 80-286, 86-297 and FCC Docket 87-134 released August 18, 1987 (Part 36 Order) and all subsequent revisions to the rules adopted through the period June 16, 2004.

C) Access rate development is performed in accordance with CC Docket No. 87-113 released August 18, 1987 (Part 69 Conformance Notice) and subsequent modifications including CC Docket No. 00-256, Second Report and Order and Notice of Proposed Rulemaking, 16 FCC Rcd 19613 (2001), ("Rate-of-Return Access Charge Reform Order".

The proposed access service tariff maintains the method of charging for interstate access by major rate element. Iowa Network Access Division proposes to reduce its current equal access switched transport rate from $0.01045 to $0.01031 which is to remain in effect through June 30, 2006.

RATE DEVELOPMENT

Development of cost support as contained in the tariff filing was accomplished as follows:

1) Projection of test period investment, revenue and expense was determined based on the best estimates of management using fixed, known and measurable amounts from the Company's 2004 and 2005 operating budgets. Anticipated changes in investments and reserves were reflected in conjunction with the Company's ongoing construction and modernization programs. Revenues were increased to reflect the projected increase in access minutes during the test period over the year 2003.

2) Projection of the test period Access Division revenue requirement was accomplished using FCC Part 64 cost allocation procedures applied to total company projected investment and expense amounts determined in (1) above. The Access Division revenue requirement summary data is contained in Section 5 of the cost support material.

3) Projection of the test period interstate access revenue requirement was accomplished using Parts 36/69 separation procedures applied to projected total Access Division investment and expense amounts determined in (2) above. The summary Part 36 and Part 69 revenue requirements are contained in Sections 3 and 4 of the cost support material.

4) Projection of access minutes for the period from July 1, 2004 through June 30, 2005 was accomplished by applying an interstate annual growth rate of 2.32% to projected interstate access minutes for the period ending June 30, 2004. Projected access minutes for the period ending June 30, 2005 represent a 5.41% over interstate access minutes for the historical period January 1, 2003 through December 31, 2003. Access minutes for the period ending June 30, 2005 are projected to be 876,231,538 compared to 856,381,984 for the projected period ending June 30, 2004 and 831,287,417 for the actual period ended December 31, 2003. Projected access minutes for the test period ending June 30, 2005 are presented on Schedule B following.

5) The interstate access revenue requirement determined in (3) above of $9,065,913 was reduced by projected nonrecurring service revenues of $31,966. Projected revenues from nonrecurring charges of $31,966 represent service order and labor charges for engineering, overtime repair, stand by repair, testing and maintenance provided to other telephone companies other than when in conjunction with acceptance testing.

6) The projected switched transport charge was determined by dividing the residual interstate revenue requirement of $9,033,947 determined in (5) above by projected

access minutes of 876,231,538 determined in (4) above resulting in a cost of $0.01031 per access minute. An analysis of the development of the interstate switched transport rate is presented on Schedule A in Section 2.

SUMMARY

The 2004 annual access tariff filing is supplemented by the enclosed cost support material. Schedule A reflects the Company's existing switched transport charge of $0.01045 compared with the authorized rate of $0.01031. Through this filing, the Company proposes to reduce its switched transport charge from $0.01045 to $0.01031 for the test period ending June 30, 2005 resulting in a reduction of switched transport revenue of $122,672 for the period ending June 30, 2005. The proposed switched transport charge will produce revenues that will generate a rate of return on investment of 11.25% for the test period ended June 30, 2005.

Included in the cost support material are schedules depicting projected investment and expense data, demand quantities, jurisdictional cost allocations and rate calculations for the twelve-month period ending June 30, 2005. Cost and revenue data for the historical period from January 1 through December 31, 2003 is contained in the Company's Tariff Review Plan (TRP) which has been filed under separate cover.

This filing is presented to comply with the Commission's July 1, 2004 annual access tariff filing requirements in Order, 19 FCC Rcd 7047 and subsequent Order, 19 FCC Rcd 7038 establishing the Tariff Review Plan (TRP) schedules to be filed in support of the annual access charge tariff filing. The Company proposes a switched transport charge of $0.01031 through June 30, 2006.

PUBLIC VERSION

TARIFF REVIEW PLAN

INDEX

RORCOS-1(P)	Page 1 of 4
RORCOS-1(P)	Page 2 of 4
RORCOS-1(P)	Page 3 of 4
RORCOS-1(P)	Page 4 of 4
RORCOS-1(H)	Page 1 of 4
RORCOS-1(H)	Page 2 of 4
RORCOS-1(H)	Page 3 of 4
RORCOS-1(H)	Page 4 of 4
RORCOS-2	Page 1 of 3
RORCOS-2	Page 2 of 3
RORCOS-2	Page 3 of 3
RORMAG-1	Page 1 of 1
RORMAG-2	Page 1 of 1
RORREV-1	Page 1 of 2
RORREV-1	Page 2 of 2
RORREV-2	Page 1 of 1
RORRTE-1	Page 1 of 2
RORRTE-1	Page 2 of 2
RORRTE-2	Page 1 of 1
RORRTE-3	Page 1 of 2
RORRTE-3	Page 2 of 2
RORDMD-1	Page 1 of 3
RORDMD-1	Page 2 of 3
RORDMD-1	Page 3 of 3
RORDMD-2	Page 1 of 1
RORDMD-3	Page 1 of 1
RORDMD-4	Page 1 of 1
RORDMD-5	Page 1 of 1
RORERN-1	Page 1 of 1
RORBSF-1	Page 1 of 1
RORDEM-1	Page 1 of 1
61.38 ACR-1 Historical	Page 1 of 1
61.38 ACR-1 Projected	Page 1 of 1

Certification

IOWA NETWORK ACCESS DIVISION

TARIFF F.C.C. NO. 1
18th Revised Page 1
Cancels 17th Revised Page1

CENTRALIZED EQUAL ACCESS SERVICE

CHECK SHEET

Title Page 1 and Page 1 to 188 and Supplement No. 7, inclusive, of this tariff are effective as of the date shown. Original and revised pages as named below contain all changes from the original tariff that are in effect on the date hereof.
* New or Revised page

Page	Number of Revision Except as Indicated	Page	Number of Revision Except as Indicated	Page	Number of Revision Except as Indicated	Page	Number of Revision Except as Indicated
1*	18th	28	1st	54	Original	78	1st
1.1*	5th	29	1st	55	Original	79	Original
2	1st	30	Original	56	1st	80	Original
3	Original	31	Original	57	Original	81	Original
4	1st	32	Original	58	1st	82	Original
5	3rd	33	1st	59	Original	83	2nd
6	3rd	34	Original	60	Original	84	1st
7	1st	35	Original	61	2nd	85	1st
8	1st	36	Original	61.1	Original	86	2nd
9	Original	37	2nd	62	1st	87	1st
10	1st	38	1st	63	2nd	87.1	Original
11	2nd	39	2nd	63.1	1st	88	3rd
12	1st	40	3rd	64	1st	89	3rd
13	5th	40.1	Original	64.1	1st	89.1	1st
13.1	Original	41	Original	65	1st	89.2	1st
14	1st	42	1st	66	Original	89.3	1st
15	1st	43	3rd	67	Original	89.4	1st
16	2nd	43.1	Original	68	Original	90	2nd
17	Original	44	Original	69	1st	91	Original
18	Original	45	1st	69.1	1st	92	2nd
19	1st	46	1st	70	Original	93	2nd
20	1st	46.1	Original	71	Original	94	1st
21	Original	47	Original	72	3rd	95	1st
22	Original	48	Original	72.1	1st	96	1st
23	Original	49	Original	73	1st	97	1st
24	Original	50	1st	74	Original	98	1st
25	Original	51	1st	75	Original		
26	Original	52	1st	76	1st		
27	Original	53	1st	77	Original		

Issued: June 24, 2004 Effective: July 1, 2004

4201 Corporate Drive
West Des Moines, Iowa 50266-5906

IOWA NETWORK ACCESS DIVISION

TARIFF F.C.C. NO. 1
5th Revised Page 1.1
Cancels 4th Revised Page1.1

CENTRALIZED EQUAL ACCESS SERVICE

CHECK SHEET

Title Page 1 and Page 1 to 188 and Supplement No. 7, inclusive, of this tariff are effective as of the date shown. Original and revised pages as named below contain all changes from the original tariff that are in effect on the date hereof.

Page	Number of Revision Except as Indicated	Page	Number of Revision Except as Indicated	Page	Number of Revision Except as Indicated	Page	Number of Revision Except as Indicated
99	1st	123	Original	147	1st	175	Original
100	1st	124	1st	147.1	Original	176	Original
101	1st	125	1st	148	1st	177	1st
102	Original	126	Original	149	1st	178	1st
103	Original	127	Original	150	1st	179	Original
104	2nd	128	Original	151	1st	180	1st
105	1st	129	1st	152	1st	181	1st
105.1	1st	129.1	1st	153	1st	182	Original
105.2	1st	130	1st	154	1st	183	Original
105.3	Original	131	Original	155	1st	184	Original
106	Original	132	2nd	156	1st	185	Original
107	Original	133	Original	157	Original	186	Original
108	2nd	134	1st	158	Original	187	Original
109	Original	135	1st	159	Original	188	Original
110	Original	136	2nd	160	Original		
111	Original	136.1	2nd	161	Original		
112	1st	136.1.1	Original	162	Original		
113	1st	136.2	1st	163	Original		
114	1st	137	1st	164	Original		
115	1st	138	2nd	165	Original		
116	1st	139	1st	166	Original		
117	Original	140	2nd	167	Original		
118	1st	140.1	Original	168	Original		
118.1	Original	141	1st	169	Original		
119	1st	142	3rd	170	Original		
120	1st	143	Original	171	Original		
120.1	2nd	144	Original	172	Original		
121	1st	145*	8th	173	1st		
122	Original	146	Original	174	1st		

* New or Revised page

CENTRALIZED EQUAL ACCESS SERVICE

6. Switched Access Service (Cont'd)

6.8 Rates and Charges

6.8.1 Switched Transport

(A) Rate

	Rate Per Access Minute	
	$ 0.01031	(R)

	Rate Per Call Blocked
(B) Network Blocking Charge +	$ 0.0070

(C) Nonrecurring Charges

(1) Installation

	Rate Per Trunk
Activation of the first trunk or SNAC contained in the order	$ 514.68
Activation of each additional trunk or SNAC contained in an order	$ 12.55

(2) Interim NXX Translation

	Rate Per Order
Activation or deactivation of the first NXX code contained in an order	$ 213.70
Activation or deactivation of each additional NXX code contained in an order	$ 23.81

+Applies to FGD

CERTIFICATION

I certify that I am a consultant authorized by Iowa Network Services, Inc. to deal with matters involving the interstate access tariff filing of Iowa Network Access Division; that I have examined the foregoing Tariff Review Plan; statements of fact contained in this Tariff Review Plan are true and this report is a correct statement of the business and affairs of the above named respondent in respect to each and every matter set forth therein during the period from July 1, 2004 to June 30, 2005.

June 24, 2004
Date

William J. Warinner
WARINNER,GESINGER & ASSOCIATES, LLC

IOWA NETWORK SERVICES, INC.
IOWA NETWORK ACCESS DIVISION
INTERSTATE ACCESS RATE DEVELOPMENT
TRANSMITTAL NO. 22
PROJECTED TEST PERIOD ENDED 6/30/2005

SECTION 2
SCHEDULE A

	SOURCE	CURRENT RATE	COST SUPPORT	DIFFERENCE
1 SWITCHED TRANSPORT RATE	(BELOW)	$0.01045	$0.01031	($0.00014)
2 STUDY PERIOD ACCESS MINUTES	SCHEDULE B	876,231,538	876,231,538	
3 STUDY PERIOD ACCESS REVENUE	LN 1*LN 2	$9,156,620	$9,033,947	($122,672)

-

ACCESS RATE DEVELOPMENT	SOURCE	AMOUNT
4 PROJECTED REVENUE REQUIREMENT	SECTION 4	$9,065,913
5 LESS: MISCELLANEOUS REVENUE	RECORDS	31,966
7 ACCESS REVENUE REQUIREMENT	LN 4-LN 5	$9,033,947
8 PROJECTED ACCESS MINUTES	SCHEDULE B	876,231,538
9 PROJECTED ACCESS RATE PER MOU	LN 4/LN 5	$0.01031

PUBLIC VERSION

IOWA NETWORK SERVICES, INC.
IOWA NETWORK ACCESS DIVISION
EQUAL ACCESS MOU SUMMARY
TRANSMITTAL NO. 22
PROJECTED TEST PERIOD ENDED 6/30/2005

SECTION 2
SCHEDULE B

PRO FORMA ALL CARRIERS	DAYS	INTERSTATE INTRALATA ORIGINATING MINUTES	INTERSTATE INTRALATA TERMINATING MINUTES	INTERSTATE INTRALATA REVENUES	INTERSTATE INTERLATA ORIGINATING MINUTES	INTERSTATE INTERLATA TERMINATING MINUTES	INTERSTATE INTERLATA REVENUES	TOTAL MINUTES	TOTAL REVENUES
7/1/2004 - 7/31/2004	31	1,262,861	1,550,216	$29,002.83	30,743,102	38,090,617	$709,675.63	71,646,797	$738,678.46
8/1/2004 - 8/31/2004	31	1,148,457	1,246,373	$24,690.69	33,704,798	37,641,136	$735,576.56	73,740,763	$760,267.25
9/1/2004 - 9/30/2004	30	1,184,025	1,373,204	$26,365.03	31,645,727	37,186,415	$709,659.37	71,389,371	$736,024.40
10/1/2004 - 10/31/2004	31	1,229,393	1,425,821	$27,375.26	32,858,308	38,611,301	$736,851.65	74,124,823	$764,226.91
11/1/2004 - 11/30/2004	30	1,194,171	1,384,971	$26,590.95	31,916,903	37,505,070	$715,740.53	72,001,115	$742,331.49
12/1/2004 - 12/31/2004	31	1,237,555	1,435,287	$27,557.01	33,076,453	38,867,640	$741,743.58	74,616,935	$769,300.59
1/1/2005 - 1/31/2005	31	1,240,639	1,438,864	$27,625.68	33,158,880	38,964,498	$743,592.02	74,802,881	$771,217.69
2/1/2005 - 2/28/2005	28	1,122,967	1,302,391	$25,005.44	30,013,830	35,268,798	$673,063.89	67,707,987	$698,069.33
3/1/2005 - 3/31/2005	31	1,245,404	1,444,390	$27,731.78	33,286,233	39,114,149	$746,447.92	75,090,176	$774,179.70
4/1/2005 - 4/30/2005	30	1,207,247	1,400,136	$26,882.12	32,266,390	37,915,747	$723,577.82	72,789,520	$750,459.93
5/1/2005 - 5/31/2005	31	1,249,309	1,448,919	$27,818.74	33,390,604	39,236,794	$748,788.47	75,325,627	$776,607.20
6/1/2005 - 6/30/2005	30	1,210,664	1,404,099	$26,958.21	32,357,717	38,023,064	$725,625.84	72,995,544	$752,584.05
TOTAL		14,532,693	16,854,672	$323,603.73	388,418,945	456,425,228	$8,710,343.27	876,231,538	$9,033,947.00
3rd QUARTER		3,595,343	4,169,793	$80,058.55	96,093,627	112,918,168	$2,154,911.56	216,776,930	$2,234,970.11
4th QUARTER		3,661,120	4,246,079	$81,523.22	97,851,664	114,984,010	$2,194,335.76	220,742,873	$2,275,858.98
1st QUARTER		3,609,011	4,185,645	$80,362.90	96,458,943	113,347,445	$2,163,103.82	217,601,044	$2,243,466.72
2nd QUARTER		3,667,220	4,253,155	$81,659.06	98,014,711	115,175,605	$2,197,992.12	221,110,691	$2,279,651.18
TOTAL COMPANY		14,532,693	16,854,672	$323,603.73	388,418,945	456,425,228	$8,710,343.27	876,231,538	$9,033,947.00

PUBLIC VERSION

SUMMARY OF REVENUE REQUIREMENT BY ACCESS ELEMENT

A-1,1of1

					COMMON LINE		TRAFFIC SENSITIVE					SPECIAL ACCESS						
									COMMON TRANSPORT		DEDICATED	NEL TERMINATION		CHANNEL MILEAGE			IX CATEGORY	
LN	A/C	DESCRIPTION	TOTAL COMPANY	SOURCE	LIMITED PAY	COMMON LINE	SWITCHING	INFO	TERM	FACILITY	TRANSPORT	ALLOCATED	TERM	TERM	FACILITY	B&C	MSG	P.L.
1		NET INVESTMENT FOR SETTLEMENTS	3,348,539	(NOTE A)	0	0	2,234,490	0	1,114,049	0	0	0	0	0	0	0	0	0
2		RATE OF RETURN	11.2500%		11.2500%	11.2500%	11.2500%	11.2500%	11.2500%	11.2500%	11.2500%	11.2500%	11.2500%	11.2500%	11.2500%	11.2500%	11.2500%	11.2500%
3		RETURN ON INVESTMENT	376,711	LN 1*LN 2	0	0	251,380	0	125,330	0	0	0	0	0	0	0	0	0
4		ALLOW FOR FUNDS USED DURING CONSTR	0	A-8,LN 29	0	0	0	0	0	0	0	0	0	0	0	0	0	0
5		NET RETURN FOR SETTLEMENTS	376,711	LN 3-LN 4	0	0	251,380	0	125,330	0	0	0	0	0	0	0	0	0
6		FEDERAL OPERATING INCOME TAX - ACTUAL	0	RECORDS	0	0	0	0	0	0	0	0	0	0	0	0	0	0
7		FEDERAL OPERATING INCOME TAX - OPTION	26,412	LN 30	0	0	17,625	0	8,787	0	0	0	0	0	0	0	0	0
8		FEDERAL ITC AMORTIZATION	0	A-12,LN 22	0	0	0	0	0	0	0	0	0	0	0	0	0	0
9		STATE OPERATING INCOME TAX - ACTUAL	0	RECORDS	0	0	0	0	0	0	0	0	0	0	0	0	0	0
10		STATE OPERATING INCOME TAX - OPTION	8,792	LN 36	0	0	5,867	0	2,925	0	0	0	0	0	0	0	0	0
11		STATE ITC AMORTIZATION	0	A-12,LN 23	0	0	0	0	0	0	0	0	0	0	0	0	0	0
12		PROVISION FOR DEFERRED INCOME TAX	0	RECORDS	0	0	0	0	0	0	0	0	0	0	0	0	0	0
13		OPERATING EXPENSE & OTHER TAXES	8,549,559	A-8,LN 18	0	0	1,690,504	0	842,834	6,016,221	0	0	0	0	0	0	0	0
14		NONOPERATING EXP	9,209	A-8,LN 23	0	0	6,145	0	3,064	0	0	0	0	0	0	0	0	0
15		UNCOLLECTIBLES	95,230	A-8,LN 28	0	0	63,548	0	31,683	0	0	0	0	0	0	0	0	0
16		BASIS FOR GROSS RECEIPTS TAX	9,065,913		0	0	2,035,069	0	1,014,623	6,016,221	0	0	0	0	0	0	0	0
17		GROSS RECEIPTS TAX RATE	0.0000%		0.0000%	0.0000%	0.0000%	0.0000%	0.0000%	0.0000%	0.0000%	0.0000%	0.0000%	0.0000%	0.0000%	0.0000%	0.0000%	0.0000%
18		GROSS RECEIPTS TAX	0	LN16*LN17	0	0	0	0	0	0	0	0	0	0	0	0	0	0
19		TOTAL REVENUE REQUIREMENT	9,065,913	LN16+LN18	0	0	2,035,069	0	1,014,623	6,016,221	0	0	0	0	0	0	0	0

NOTE A: INCLUDES A-2,LN 31 LESS A/C 2004, TPUC - LONG TERM

		OPTIONAL GROSS UP INCOME TAX CALCULATION																
20		RETURN ON INVESTMENT	376,711	LN 3	0	0	251,380	0	125,330	0	0	0	0	0	0	0	0	0
21		INTEREST AND RELATED ITEMS	325,440	A-12,LN 16	0	0	217,167	0	108,273	0	0	0	0	0	0	0	0	0
22		OTHER INCOME ADJUSTMENTS	0	A-12,LN 20	0	0	0	0	0	0	0	0	0	0	0	0	0	0
23		TOTAL INCOME ADJUSTMENTS	325,440	LN21+LN22	0	0	217,167	0	108,273	0	0	0	0	0	0	0	0	0
24		RETURN LESS INCOME ADJ	51,271	LN20-LN23	0	0	34,213	0	17,058	0	0	0	0	0	0	0	0	0
25		FEDERAL ITC AMORTIZATION	0	A-12,LN 22	0	0	0	0	0	0	0	0	0	0	0	0	0	0
26		FIT BASE	51,271		0	0	34,213	0	17,058	0	0	0	0	0	0	0	0	0
27		FEDERAL TAXABLE INCOME	77,683		0	0	51,838	0	25,845	0	0	0	0	0	0	0	0	0
28	34.00%	FEDERAL INCOME TAX	26,412	LN 27*FTR	0	0	17,625	0	8,787	0	0	0	0	0	0	0	0	0
29		FEDERAL SURTAX ALLOCATION	0	/LN 26	0	0	0	0	0	0	0	0	0	0	0	0	0	0
30		NET FEDERAL TAX BEFORE ITC AMORT	26,412	LN28-LN29	0	0	17,625	0	8,787	0	0	0	0	0	0	0	0	0
31		STATE ITC AMORTIZATION	0	A-12, LN23	0	0	0	0	0	0	0	0	0	0	0	0	0	0
32		SIT BASE	77,683		0	0	51,838	0	25,845	0	0	0	0	0	0	0	0	0
33		STATE TAXABLE INCOME	88,276		0	0	58,907	0	29,369	0	0	0	0	0	0	0	0	0
34	12.00%	STATE INCOME TAX	8,792	LN 33*STR	0	0	5,867	0	2,925	0	0	0	0	0	0	0	0	0
35		STATE SURTAX ALLOCATION	0	/LN 32	0	0	0	0	0	0	0	0	0	0	0	0	0	0
36		NET STATE INCOME TAX BEFORE ITC AMORT	8,792	LN34-LN35	0	0	5,867	0	2,925	0	0	0	0	0	0	0	0	0
37		FEDERAL TAX AT MAXIMUM RATE	26,412		0	0	17,625	0	8,787	0	0	0	0	0	0	0	0	0
38		INCOME ADJUSTMENT FOR FIT	0		0	0	0	0	0	0	0	0	0	0	0	0	0	0

PUBLIC VERSION

2002 Copyright TIS, Inc. v1.9

SUMMARY OF TELEPHONE PLANT AND RESERVES

A-2,1of1

					COMMON LINE		TRAFFIC SENSITIVE					SPECIAL ACCESS						
									COMMON TRANSPORT		DEDICATED	NEL TERMINATION		CHANNEL MILEAGE			IX CATEGORY	
LN	A/C	DESCRIPTION	TOTAL COMPANY	SOURCE	LIMITED PAY	COMMON LINE	SWITCHING	INFO	TERM	FACILITY	TRANSPORT	ALLOCATED	TERM	TERM	FACILITY	B&C	MSG	P.L.
		NET INVESTMENT SUMMARY																
1		GENERAL SUPPORT FACILITIES	1,885,302	A-3,LN 6C	0	0	1,258,068	0	627,234	0	0	0	0	0	0		0	0
2		CENTRAL OFFICE SWITCHING	9,752,253	A-4,LN 21+25			6,507,708		3,244,545		0						0	
3		OPERATOR SYSTEMS	0	A-4,LN 17			0	0	0		0						0	
4		CENTRAL OFFICE TRANSMISSION	0	A-4,LN 41	0	0			0		0	0	0	0			0	0
5		INFORMATION ORIG/TERM	0	A-5,LN 10	0	0							0					
6		CABLE AND WIRE FACILITIES	0	A-5,LN 21	0	0				0	0	0	0		0		0	0
7		TANGIBLE ASSETS	273,079	A-3,LN 14	0	0	182,226	0	90,852	0	0	0	0	0	0		0	0
8		INTANGIBLE ASSETS	119,434	A-3,LN 15	0	0	79,699	0	39,735	0	0	0	0	0	0		0	0
9		TOTAL PLANT IN SERVICE	12,030,068		0	0	8,027,700	0	4,002,367	0	0	0	0	0	0		0	0
10		% DISTRIBUTION	100.0000%		0.0000%	0.0000%	66.7303%	0.0000%	33.2697%	0.0000%	0.0000%	0.0000%	0.0000%	0.0000%	0.0000%		0.0000%	0.0000%
11		PROPERTY HELD FOR FUTURE USE	0	A-6,LN 6	0	0	0	0	0	0	0	0	0	0	0		0	0
12		PLANT UNDER CONSTRUCT. - SHORT TERM	0	A-6,LN 13	0	0	0	0	0	0	0	0	0	0	0		0	0
13		PLANT UNDER CONSTRUCT. - LONG TERM	0	A-6,LN 20	0	0	0	0	0	0	0	0	0	0	0		0	0
14		TELEPHONE PLANT ADJUSTMENT	0	A-6,LN 27	0	0	0	0	0	0	0	0	0	0	0		0	0
15		TOTAL PROPERTY,PLANT & EQUIP.	12,030,068		0	0	8,027,700	0	4,002,367	0	0	0	0	0	0		0	0
16		% DISTRIBUTION	100.0000%		0.0000%	0.0000%	66.7303%	0.0000%	33.2697%	0.0000%	0.0000%	0.0000%	0.0000%	0.0000%	0.0000%		0.0000%	0.0000%
17		ACCUM DEPRECIATION - PLANT IN SERVICE	6,957,540	A-7,LN 7	0	0	4,642,788	0	2,314,753	0	0	0	0	0	0		0	0
18		ACCUM DEPRECIATION - FUTURE USE	0	A-7,LN 8	0	0	0	0	0	0	0	0	0	0	0		0	0
19		ACCUM AMORTIZATION - TANGIBLE PROPERTY	208,701	A-7,LN 15	0	0	139,266	0	69,434	0	0	0	0	0	0		0	0
20		ACCUM AMORTIZATION - INTANGIBLE PROP.	119,434	A-7,LN 16	0	0	79,699	0	39,735	0	0	0	0	0	0		0	0
21		ACCUM AMORTIZATION - TEL PLANT ADJ.	0	A-7,LN 17	0	0	0	0	0	0	0	0	0	0	0		0	0
22		OPERATING DEFERRED INCOME TAX	1,761,553	A-7,LN 26	0	0	1,175,490	0	586,063	0	0	0	0	0	0		0	0
23		OTHER DEFERRED CREDITS - NET	0	A-7,LN 34	0	0	0	0	0	0	0	0	0	0	0		0	0
24		NET TELEPHONE PLANT	2,982,839		0	0	1,990,458	0	992,382	0	0	0	0	0	0		0	0
25		% DISTRIBUTION	100.0000%		0.0000%	0.0000%	66.7303%	0.0000%	33.2697%	0.0000%	0.0000%	0.0000%	0.0000%	0.0000%	0.0000%		0.0000%	0.0000%
26		MATERIALS AND SUPPLIES	0	A-3,LN 16	0	0	0	0	0	0	0	0	0	0	0		0	0
27		RTB STOCK	0	A-3,LN 17	0	0	0	0	0	0	0	0	0	0	0		0	0
28		EQUAL ACCESS EQUIPMENT	0	A-3,LN 8			0											
29		OTHER JURISDICTIONAL ASSETS	0	A-3,LN 18	0	0	0	0	0	0	0	0	0	0	0		0	0
30		CASH WORKING CAPITAL	365,700	A-3,LN 10	0	0	244,032	0	121,667	0	0	0	0	0	0		0	0
31		NET TELEPHONE PLANT,M&S AND CASH WORKING CAPITAL	3,348,539		0	0	2,234,490	0	1,114,049	0	0	0	0	0	0		0	0
32		% DISTRIBUTION	100.0000%		0.0000%	0.0000%	66.7303%	0.0000%	33.2697%	0.0000%	0.0000%	0.0000%	0.0000%	0.0000%	0.0000%		0.0000%	0.0000%

PUBLIC VERSION

2002 Copyright TIS, Inc. v1.9

GENERAL SUPPORT FACILITIES AND MISCELLANEOUS PLANT ALLOCATION

					COMMON LINE		TRAFFIC SENSITIVE					SPECIAL ACCESS						
									COMMON TRANSPORT		DEDICATED	NEL TERMINATION		CHANNEL MILEAGE			IX CATEGORY	
LN	A/C	DESCRIPTION	TOTAL COMPANY	SOURCE	LIMITED PAY	COMMON LINE	SWITCHING	INFO	TERM	FACILITY	TRANSPORT	ALLOCATED	TERM	TERM	FACILITY	B&C	MSG	P.L.
		BASIS FOR GENERAL SUPPORT FACILITIES																
1		CENTRAL OFFICE EQUIPMENT	9,752,253	A-4,LN 42	0	0	6,507,708	0	3,244,545		0	0	0	0			0	0
2		INFORMATION ORIG/TERM	0	A-5,LN 10	0	0							0					
3		CWF EXCL CAT 1.3	0	A-5,LN 23	0	0				0	0	0	0		0		0	0
4		TOTAL	9,752,253		0	0	6,507,708	0	3,244,545	0	0	0	0	0	0		0	0
5		% DISTRIBUTION	100.0000%		0.0000%	0.0000%	66.7303%	0.0000%	33.2697%	0.0000%	0.0000%	0.0000%	0.0000%	0.0000%	0.0000%		0.0000%	0.0000%
		GENERAL SUPPORT ASSETS																
6a		ALLOCATED	1,885,302	LN 5	0	0	1,258,068	0	627,234	0	0	0	0	0	0		0	0
6b		DIRECT NON ACCESS	0	DIRECT													0	0
6c		TOTAL GENERAL SUPPORT ASSETS	1,885,302		0	0	1,258,068	0	627,234	0	0	0	0	0	0		0	0
7		% DISTRIBUTION	100.0000%		0.0000%	0.0000%	66.7303%	0.0000%	33.2697%	0.0000%	0.0000%	0.0000%	0.0000%	0.0000%	0.0000%		0.0000%	0.0000%
8		EQUAL ACCESS EQUIPMENT	0	DIRECT			0											
9		COE,IOT,CWF,GENERAL SUPPORT AND EQUAL ACCESS EQUIPMENT	11,637,555		0	0	7,765,776	0	3,871,779	0	0	0	0	0	0		0	0
10		% DISTRIBUTION	100.0000%		0.0000%	0.0000%	66.7303%	0.0000%	33.2697%	0.0000%	0.0000%	0.0000%	0.0000%	0.0000%	0.0000%		0.0000%	0.0000%
11		TANGIBLE ASSETS																
12		CAPITAL LEASES	0	LN 10	0	0	0	0	0	0	0	0	0	0	0		0	0
13		LEASEHOLD IMPROVEMENTS	273,079	LN 10	0	0	182,226	0	90,852	0	0	0	0	0	0		0	0
14		TOTAL	273,079		0	0	182,226	0	90,852	0	0	0	0	0	0		0	0
15		INTANGIBLE ASSETS	119,434	LN 10	0	0	79,699	0	39,735	0	0	0	0	0	0		0	0
16		MATERIALS AND SUPPLIES	0	LN 10	0	0	0	0	0	0	0	0	0	0	0		0	0
17		RTB STOCK	0	LN 10	0	0	0	0	0	0	0	0	0	0	0		0	0
18		OTHER JURISDICTIONAL ASSETS	0	LN 10	0	0	0	0	0	0	0	0	0	0	0		0	0
19		COE,IOT,CWF,GEN SUPP & EQUAL ACCESS FOR APPORTIONING PRESUBSCRIPTION	11,637,555		0	0	7,765,776	0	3,871,779	0	0							
20		% DISTRIBUTION	100.0000%		0.0000%	0.0000%	66.7303%	0.0000%	33.2697%	0.0000%	0.0000%							
21		COE,IOT & CWF EXCL CCL FOR ASSIGNING CARRIER ACCESS BILLING EXPENSES	9,752,253				6,507,708	0	3,244,545	0	0	0	0	0	0			
22		% DISTRIBUTION	100.0000%				66.7303%	0.0000%	33.2697%	0.0000%	0.0000%	0.0000%	0.0000%	0.0000%	0.0000%			

PUBLIC VERSION

2002 Copyright TIS, Inc. v1.9

CENTRAL OFFICE EQUIPMENT ALLOCATION

A-4,1of2

LN	A/C	DESCRIPTION	TOTAL COMPANY	SOURCE	COMMON LINE: LIMITED PAY	COMMON LINE: COMMON LINE	TRAFFIC SENSITIVE: SWITCHING	TRAFFIC SENSITIVE: INFO	TRAFFIC SENSITIVE: COMMON TRANSPORT TERM	TRAFFIC SENSITIVE: COMMON TRANSPORT FACILITY	TRAFFIC SENSITIVE: DEDICATED TRANSPORT	SPECIAL ACCESS: NEL TERMINATION ALLOCATED	SPECIAL ACCESS: NEL TERMINATION TERM	SPECIAL ACCESS: CHANNEL MILEAGE TERM	SPECIAL ACCESS: CHANNEL MILEAGE FACILITY	B&C	IX CATEGORY: MSG	IX CATEGORY: P.L.
		ALLOCATION FACTORS																
1		STANDARD WORK SECONDS																
2		- MANUAL BOARDS	100.0000%	AL-1,LN 9			0.0000%	0.0000%									100.0000%	
3		- TSPS COMPLEX	100.0000%	AL-1,LN 10			0.0000%	0.0000%									100.0000%	
4		EQUIVALENT ACCESS LINES - MSG COE	0.0000%	AL-1,LN 2	0.0000%	0.0000%						0.0000%						
5		IX CIRCUIT TERMINATIONS - MSG COE	100.0000%	AL-1,LN 6					100.0000%		0.0000%							
		CENTRAL OFFICE EQUIPMENT																
6	2220	OPERATOR SYSTEMS																
7		MANUAL SWITCHBOARDS	0	LN 2			0	0									0	
8		AUXILIARY SWITCHBOARDS																
9		- DIRECTORY ASSISTANCE	0	DIRECT				0										
10		- INTERCEPT	0	DIRECT			0											
11		- OTHER	0	DIRECT													0	
12		SERVICE OBSERVING BOARDS	0	LN 27			0	0	0		0						0	
13		TSPS																
14		- OPERATOR	0	LN 3			0	0									0	
15		- RTA	0	LN 27			0	0	0		0						0	
16		- OTHER	0	LN 27			0	0	0		0						0	
17		TOTAL OPERATOR SYSTEMS	0				0	0	0		0						0	
18	2210	TANDEM SWITCHING EQUIPMENT																
19		ACCESS	3,244,545	DIRECT					3,244,545									
20		NON ACCESS	0	DIRECT													0	
21		TOTAL TANDEM SWITCH	3,244,545						3,244,545								0	
22	2210	LOCAL SWITCHING EQUIPMENT																
23		ACCESS	6,507,708	DIRECT			6,507,708											
24		DEDICATED	0	DIRECT							0							
25		TOTAL LOCAL SWITCH	6,507,708				6,507,708				0							
26		TOTAL CAT1 EXCL SVC OBS, CAT 2 AND 3	9,752,253				6,507,708	0	3,244,545		0						0	
27		% DISTRIBUTION	100.0000%	LN 26			66.7303%	0.0000%	33.2697%		0.0000%						0.0000%	

2002 Copyright TIS, Inc. v1.9

PUBLIC VERSION

CENTRAL OFFICE EQUIPMENT ALLOCATION

A-4,2of2

LN	A/C	DESCRIPTION	TOTAL COMPANY	SOURCE	COMMON LINE: LIMITED PAY	COMMON LINE: COMMON LINE	TRAFFIC SENSITIVE: SWITCHING	TRAFFIC SENSITIVE: INFO	TRAFFIC SENSITIVE: COMMON TRANSPORT TERM	TRAFFIC SENSITIVE: COMMON TRANSPORT FACILITY	TRAFFIC SENSITIVE: DEDICATED TRANSPORT	SPECIAL ACCESS: NEL TERMINATION ALLOCATED	SPECIAL ACCESS: NEL TERMINATION TERM	SPECIAL ACCESS: CHANNEL MILEAGE TERM	SPECIAL ACCESS: CHANNEL MILEAGE FACILITY	B&C	IX CATEGORY: MSG	IX CATEGORY: P.L.
28	2230	CENTRAL OFFICE TRANSMISSION																
29		EXCHANGE WIDEBAND	0	DIRECT					0					0				
30		EXCHANGE TRUNK - BASIC	0	DIRECT					0					0				
31		EXCHANGE TRUNK - SPECIAL	0	DIRECT							0			0				
32		SUBSCRIBER LINE	0	LN 4/DIRECT	0	0						0	0					
33		INTEREXCHANGE CIRCUIT																
34		FURNINSHED OTHERS	0	DIRECT							0			0				
35		ACCESS - BASIC	0	LN 5/DIRECT					0		0			0				
36		ACCESS - SPECIAL	0	DIRECT							0			0				
37		NON ACCESS	0	DIRECT													0	0
38		TOTAL IX CIRCUIT	0						0		0			0			0	0
39		HOST/REMOTE CIRCUIT	0	DIRECT					0					0				
40		EQUIPMENT RENTED OTHERS	0	DIRECT													0	0
41		TOTAL CENTRAL OFFICE TRANSMISSION	0		0	0			0		0	0	0	0			0	0
42		TOTAL CENTRAL OFFICE EQUIPMENT	9,752,253		0	0	6,507,708	0	3,244,545		0	0	0	0			0	0
43		% DISTRIBUTION	100.0000%		0.0000%	0.0000%	66.7303%	0.0000%	33.2697%		0.0000%	0.0000%	0.0000%	0.0000%			0.0000%	0.0000%
		COE RATIOS																
44		OPERATOR SYSTEMS	0.0000%	LN 17			0.0000%	0.0000%	0.0000%		0.0000%						0.0000%	
45		TANDEM SWITCHING	100.0000%	LN 21					100.0000%								0.0000%	
46		LOCAL SWITCHING	100.0000%	LN 25			100.0000%				0.0000%							
47		CENTRAL OFFICE SWITCHING	100.0000%	LN 21+25			66.7303%		33.2697%		0.0000%						0.0000%	
48		CENTRAL OFFICE TRANSMISSION	100.0000%	LN 37	0.0000%	0.0000%			100.0000%		0.0000%	0.0000%	0.0000%	0.0000%			0.0000%	0.0000%

2002 Copyright TIS, Inc. v1.9

PUBLIC VERSION

INFORMATION ORIGINATION/TERMINATION AND CABLE AND WIRE FACILITIES

					COMMON LINE		TRAFFIC SENSITIVE					SPECIAL ACCESS						
									COMMON TRANSPORT		DEDICATED	NEL TERMINATION		CHANNEL MILEAGE			IX CATEGORY	
LN	A/C	DESCRIPTION	TOTAL COMPANY	SOURCE	LIMITED PAY	COMMON LINE	SWITCHING	INFO	TERM	FACILITY	TRANSPORT	ALLOCATED	TERM	TERM	FACILITY	B&C	MSG	P.L.
		ALLOCATION FACTORS																
1		EQUIVALENT ACCESS LINES - MSG CWF	0.0000%	AL-1,LN 4	0.0000%	0.0000%						0.0000%						
2		IX CIRCUIT MILES - MSG CWF	100.0000%	AL-1,LN 8						100.0000%	0.0000%							
3	2310	INFORMATION ORIG/TERM																
4		OTHER IOT EQUIPMENT																
5		COIN PUBLIC TELEPHONE	0	DIRECT		0												
6		COINLESS PUBLIC TELEPHONE	0	DIRECT	0													
7		OTHER	0	DIRECT		0							0					
8		SUBTOTAL	0		0	0							0					
9		NEW CUSTOMER PREMISE EQUIP	0	DIRECT		0							0					
10		TOTAL ORIG/TERM EQUIP	0		0	0							0					
11		% DISTRIBUTION	0.0000%		0.0000%	0.0000%							0.0000%					
12	2410	CABLE AND WIRE FACILITIES																
13		SUBSCRIBER LINE	0	LN 1/DIRECT	0	0						0	0					
14		EXCHANGE WIDEBAND	0	DIRECT						0					0			
15a		EXCHANGE TRUNK - BASIC	0	DIRECT						0					0			
15b		EXCHANGE TRUNK - SPECIAL	0	DIRECT							0				0			
16		INTEREXCHANGE WIDEBAND	0	DIRECT						0					0			
17a		IX TRUNK - ACCESS	0	LN 2/DIRECT						0	0				0			
17b		IX TRUNK - SPECIAL	0	DIRECT							0				0			
18		IX TRUNK - NON ACCESS	0	DIRECT													0	0
19		HOST/REMOTE	0	DIRECT						0					0			
20		EQUIPMENT FURNISHED OTHERS	0	DIRECT													0	0
21		TOTAL CABLE AND WIRE FACILITIES	0		0	0				0	0	0	0		0		0	0
22		% DISTRIBUTION	100.0000%		0.0000%	0.0000%				100.0000%	0.0000%	0.0000%	0.0000%		0.0000%		0.0000%	0.0000%
23		TOTAL CWF EXCLUDING CAT 1.3	0		0	0				0	0	0	0		0		0	0
24		% DISTRIBUTION	100.0000%		0.0000%	0.0000%				100.0000%	0.0000%	0.0000%	0.0000%		0.0000%		0.0000%	0.0000%

PROPRIETARY INFORMATION

2002 Copyright TIS, Inc. v1.9

PUBLIC VERSION

OTHER TELECOMMUNICATIONS PLANT ALLOCATION

A-6,1of1

LN	A/C	DESCRIPTION	TOTAL COMPANY	SOURCE	COMMON LINE: LIMITED PAY	COMMON LINE: COMMON LINE	TRAFFIC SENSITIVE: SWITCHING	TRAFFIC SENSITIVE: INFO	TRAFFIC SENSITIVE: COMMON TRANSPORT TERM	TRAFFIC SENSITIVE: COMMON TRANSPORT FACILITY	TRAFFIC SENSITIVE: DEDICATED TRANSPORT	SPECIAL ACCESS: NEL TERMINATION ALLOCATED	SPECIAL ACCESS: NEL TERMINATION TERM	SPECIAL ACCESS: CHANNEL MILEAGE TERM	SPECIAL ACCESS: CHANNEL MILEAGE FACILITY	B&C	IX CATEGORY: MSG	IX CATEGORY: P.L.
		OTHER TELECOMMUNICATIONS PLANT																
1	2002	PROPERTY HELD FOR FUTURE USE																
2		GENERAL SUPPORT	0	A-3,LN 7	0	0	0	0	0	0	0	0	0	0	0		0	0
3		CENTRAL OFFICE EQUIPMENT	0	A-4,LN 43	0	0	0	0	0	0	0	0	0	0	0		0	0
4		CABLE AND WIRE FACILITIES	0	A-5,LN 22	0	0				0	0	0	0	0	0		0	0
5		UNDISTRIBUTED	0	A-3,LN 10	0	0	0	0	0	0	0	0	0	0	0		0	0
6		TOTAL	0		0	0	0	0	0	0	0	0	0	0	0		0	0
7		% DISTRIBUTION	0.0000%		0.0000%	0.0000%	0.0000%	0.0000%	0.0000%	0.0000%	0.0000%	0.0000%	0.0000%	0.0000%	0.0000%		0.0000%	0.0000%
8	2003	PLANT UNDER CONSTR. - SHORT TERM																
9		GENERAL SUPPORT	0	A-3,LN 7	0	0	0	0	0	0	0	0	0	0	0		0	0
10		CENTRAL OFFICE EQUIPMENT	0	A-4,LN 43	0	0	0	0	0	0	0	0	0	0	0		0	0
11		CABLE AND WIRE FACILITIES	0	A-5,LN 22	0	0				0	0	0	0	0	0		0	0
12		UNDISTRIBUTED	0	A-3,LN 10	0	0	0	0	0	0	0	0	0	0	0		0	0
13		TOTAL	0		0	0	0	0	0	0	0	0	0	0	0		0	0
14		% DISTRIBUTION	0.0000%		0.0000%	0.0000%	0.0000%	0.0000%	0.0000%	0.0000%	0.0000%	0.0000%	0.0000%	0.0000%	0.0000%		0.0000%	0.0000%
15	2004	PLANT UNDER CONSTR. - LONG TERM																
16		GENERAL SUPPORT	0	A-3,LN 7	0	0	0	0	0	0	0	0	0	0	0		0	0
17		CENTRAL OFFICE EQUIPMENT	0	A-4,LN 43	0	0	0	0	0	0	0	0	0	0	0		0	0
18		CABLE AND WIRE FACILITIES	0	A-5,LN 22	0	0				0	0	0	0	0	0		0	0
19		UNDISTRIBUTED	0	A-3,LN 10	0	0	0	0	0	0	0	0	0	0	0		0	0
20		TOTAL	0		0	0	0	0	0	0	0	0	0	0	0		0	0
21		% DISTRIBUTION	0.0000%		0.0000%	0.0000%	0.0000%	0.0000%	0.0000%	0.0000%	0.0000%	0.0000%	0.0000%	0.0000%	0.0000%		0.0000%	0.0000%
22	2005	TELECOMMUNICATIONS PLANT ADJUST.																
23		GENERAL SUPPORT	0	A-3,LN 7	0	0	0	0	0	0	0	0	0	0	0		0	0
24		CENTRAL OFFICE EQUIPMENT	0	A-4,LN 43	0	0	0	0	0	0	0	0	0	0	0		0	0
25		CABLE AND WIRE FACILITIES	0	A-5,LN 22	0	0				0	0	0	0	0	0		0	0
26		UNDISTRIBUTED	0	A-3,LN 10	0	0	0	0	0	0	0	0	0	0	0		0	0
27		TOTAL	0		0	0	0	0	0	0	0	0	0	0	0		0	0
28		% DISTRIBUTION	0.0000%		0.0000%	0.0000%	0.0000%	0.0000%	0.0000%	0.0000%	0.0000%	0.0000%	0.0000%	0.0000%	0.0000%		0.0000%	0.0000%

PUBLIC VERSION

2002 Copyright TIS, Inc. v1.9

ACCUMULATED DEPRECIATION, AMORTIZATION AND DEFERRED INCOME TAXES

A-7,1of1

					COMMON LINE		TRAFFIC SENSITIVE					SPECIAL ACCESS						
									COMMON TRANSPORT		DEDICATED	NEL TERMINATION		CHANNEL MILEAGE			IX CATEGORY	
LN	A/C	DESCRIPTION	TOTAL COMPANY	SOURCE	LIMITED PAY	COMMON LINE	SWITCHING	INFO	TERM	FACILITY	TRANSPORT	ALLOCATED	TERM	TERM	FACILITY	B&C	MSG	P.L.
1	3100	ACCUM DEPRECIATION - PLANT IN SERVICE																
2		GENERAL SUPPORT	1,105,799	A-3,LN 10	0	0	737,903	0	367,896	0	0	0	0	0	0		0	0
3		CENTRAL OFFICE SWITCHING EQUIPMENT	5,851,741	A-3,LN 10	0	0	3,904,885	0	1,946,857	0	0	0	0	0	0		0	0
4		OPERATOR SYSTEMS EQUIPMENT	0	A-3,LN 10	0	0	0	0	0	0	0	0	0	0	0		0	0
5		CENTRAL OFFICE TRANSMISSION	0	A-3,LN 10	0	0	0	0	0	0	0	0	0	0	0		0	0
6		UNDISTRIBUTED COE	0	A-3,LN 10	0	0	0	0	0	0	0	0	0	0	0		0	0
7		INFORMATION ORIG/TERM	0	A-3,LN 10	0	0	0	0	0	0	0	0	0	0	0		0	0
8		CABLE AND WIRE FACILITIES	0	A-3,LN 10	0	0	0	0	0	0	0	0	0	0	0		0	0
9		TOTAL ACCUM DEPR - TPIS	6,957,540		0	0	4,642,788	0	2,314,753	0	0	0	0	0	0		0	0
10	3200	ACCUM DEPRECIATION - FUTURE USE	0	A-3,LN 10	0	0	0	0	0	0	0	0	0	0	0		0	0
11		TOTAL ACCUM DEPRECIATION	6,957,540		0	0	4,642,788	0	2,314,753	0	0	0	0	0	0		0	0
12		% DISTRIBUTION	100.0000%		0.0000%	0.0000%	66.7303%	0.0000%	33.2697%	0.0000%	0.0000%	0.0000%	0.0000%	0.0000%	0.0000%		0.0000%	0.0000%
		ACCUMULATED AMORTIZATION																
13	3400	TANGIBLE ASSETS																
14		CAPITAL LEASES	0	A-3,LN 10	0	0	0	0	0	0	0	0	0	0	0		0	0
15		LEASEHOLD IMPROVEMENTS	208,701	A-3,LN 10	0	0	139,266	0	69,434	0	0	0	0	0	0		0	0
16		UNDISTRIBUTED	0	A-3,LN 10	0	0	0	0	0	0	0	0	0	0	0		0	0
17		TOTAL ACCUM AMORT - TANGIBLE	208,701		0	0	139,266	0	69,434	0	0	0	0	0	0		0	0
18	3500	INTANGIBLE ASSETS	119,434	A-3,LN 10	0	0	79,699	0	39,735	0	0	0	0	0	0		0	0
19	3600	TELEPHONE PLANT ADJUSTMENT	0	A-3,LN 10	0	0	0	0	0	0	0	0	0	0	0		0	0
20		TOTAL ACCUM AMORTIZATION	328,135		0	0	218,965	0	109,169	0	0	0	0	0	0		0	0
21		% DISTRIBUTION	100.0000%		0.0000%	0.0000%	66.7303%	0.0000%	33.2697%	0.0000%	0.0000%	0.0000%	0.0000%	0.0000%	0.0000%		0.0000%	0.0000%
22	4100&	NET OPERATING DEFERRED INC TAX																
23	4340	GENERAL SUPPORT	0	A-3,LN 10	0	0	0	0	0	0	0	0	0	0	0		0	0
24		CENTRAL OFFICE EQUIP	0	A-3,LN 10	0	0	0	0	0	0	0	0	0	0	0		0	0
25		INFORMATION ORIG/TERM	0	A-3,LN 10	0	0	0	0	0	0	0	0	0	0	0		0	0
26		CABLE AND WIRE FACILITIES	0	A-3,LN 10	0	0	0	0	0	0	0	0	0	0	0		0	0
27		UNDISTRIBUTED	1,761,553	A-3,LN 10	0	0	1,175,490	0	586,063	0	0	0	0	0	0		0	0
28		TOTAL NET DEFERRED INC TAX	1,761,553		0	0	1,175,490	0	586,063	0	0	0	0	0	0		0	0
29		% DISTRIBUTION	100.0000%		0.0000%	0.0000%	66.7303%	0.0000%	33.2697%	0.0000%	0.0000%	0.0000%	0.0000%	0.0000%	0.0000%		0.0000%	0.0000%
30	4360	OTHER DEFERRED CREDITS - NET																
31		GENERAL SUPPORT	0	A-3,LN 10	0	0	0	0	0	0	0	0	0	0	0		0	0
32		CENTRAL OFFICE EQUIP	0	A-3,LN 10	0	0	0	0	0	0	0	0	0	0	0		0	0
33		INFORMATION ORIG/TERM	0	A-3,LN 10	0	0	0	0	0	0	0	0	0	0	0		0	0
34		CABLE AND WIRE FACILITIES	0	A-3,LN 10	0	0	0	0	0	0	0	0	0	0	0		0	0
35		UNDISTRIBUTED	0	A-3,LN 10	0	0	0	0	0	0	0	0	0	0	0		0	0
36		TOTAL OTHER DEFERRED CREDITS	0		0	0	0	0	0	0	0	0	0	0	0		0	0
37		% DISTRIBUTION	0.0000%		0.0000%	0.0000%	0.0000%	0.0000%	0.0000%	0.0000%	0.0000%	0.0000%	0.0000%	0.0000%	0.0000%		0.0000%	0.0000%

PUBLIC VERSION

2002 Copyright TIS, Inc. v1.9

SUMMARY OF OPERATING EXPENSE AND TAX AND MISCELLANEOUS TAX ITEMS

A-8,1of1

					COMMON LINE		TRAFFIC SENSITIVE					SPECIAL ACCESS						
									COMMON TRANSPORT		DEDICATED	NEL TERMINATION		CHANNEL MILEAGE			IX CATEGORY	
LN	A/C	DESCRIPTION	TOTAL COMPANY	SOURCE	LIMITED PAY	COMMON LINE	SWITCHING	INFO	TERM	FACILITY	TRANSPORT	ALLOCATED	TERM	TERM	FACILITY	B&C	MSG	P.L.
		OPERATING EXPENSE AND TAX																
1	6110	NETWORK SUPPORT EXPENSE	0	A-9,LN 6	0	0	0	0	0	0	0	0	0	0	0	0	0	0
2	6120	GENERAL SUPPORT EXPENSE	456,216	A-9,LN 7	0	0	304,434	0	151,782	0	0	0	0	0	0		0	0
3	6210	CENTRAL OFFICE EXPENSE	405,573	A-9,LN 15	0	0	270,640	0	134,933	0	0	0	0	0	0	0	0	0
4	6310	INFORMATION ORIG/TERM EXP	0	A-9,LN 22	0	0	0	0	0	0	0	0	0	0	0	0	0	0
5	6410	CABLE AND WIRE FACILITIES EXP	5,421,824	A-9,LN 24	0	0	0	0	0	5,421,824	0	0	0	0	0		0	0
6	6510	OTHER PLANT EXPENSE	0	A-10,LN 6	0	0	0	0	0	0	0	0	0	0	0		0	0
7	6530	NETWORK OPERATIONS EXPENSE	333,884	A-10,LN 7	0	0	222,802	0	111,082	0	0	0	0	0	0		0	0
8	6540	ACCESS CHARGE EXPENSE	0	A-10,LN 8													0	0
9	6610	MARKETING EXPENSE	0	A-11,LN 1	0	0	0	0	0	0	0	0	0	0	0		0	0
8	6620	SERVICES EXPENSE	78,913	A-11,LN29	0	0	52,659	0	26,254	0	0	0	0	0	0	0	0	0
11	6710	EXECUTIVE AND PLANNING EXP	149,195	A-12,LN 8	0	0	18,950	0	9,448	120,798	0	0	0	0	0	0	0	0
12	6720	GENERAL AND ADMINISTRATIVE EXP	584,935	A-12,LN 9	0	0	74,295	0	37,041	473,599	0	0	0	0	0	0	0	0
13		SUBTOTAL OPERATING EXPENSE	7,430,540		0	0	943,780	0	470,540	6,016,221	0	0	0	0	0	0	0	0
14		% DISTRIBUTION	100.0000%		0.0000%	0.0000%	12.7014%	0.0000%	6.3325%	80.9661%	0.0000%	0.0000%	0.0000%	0.0000%	0.0000%	0.0000%	0.0000%	0.0000%
15	6560	DEPRECIATION AND AMORTIZATION	1,055,307	A-10,LN 19+27	0	0	704,210	0	351,098	0	0	0	0	0	0	0	0	0
16	7200	OTHER OPERATING TAX	63,711	A-12,LN 24	0	0	42,514	0	21,196	0	0	0	0	0	0		0	0
17		EQUAL ACCESS EXPENSE	0	A-12,LN 12			0											
18		TOTAL OPERATING EXP & TAX	8,549,559		0	0	1,690,504	0	842,834	6,016,221	0	0	0	0	0	0	0	0
19		% DISTRIBUTION	100.0000%		0.0000%	0.0000%	19.7730%	0.0000%	9.8582%	70.3688%	0.0000%	0.0000%	0.0000%	0.0000%	0.0000%	0.0000%	0.0000%	0.0000%
20	7370	NON OPERATING EXPENSE																
21		ABANDONED CONSTRUCTION	0	A-3,LN 10	0	0	0	0	0	0	0	0	0	0	0	0	0	0
22		CONTRIBUTIONS	9,209	A-3,LN 10	0	0	6,145	0	3,064	0	0	0	0	0	0	0	0	0
23		TOTAL NON OPERATING EXP	9,209		0	0	6,145	0	3,064	0	0	0	0	0	0	0	0	0
24		UNCOLLECTIBLES																
25	5310	END USER MSG TOLL	0	A-3,LN 10	0	0	0	0	0	0	0	0	0	0	0	0	0	0
26	5320	END USER COMMON LINE	0	DIRECT		0												
27	5330	IX CARRIER	95,230	A-3,LN 22			63,548	0	31,683	0	0	0	0	0	0	0	0	0
28		TOTAL UNCOLLECTIBLES	95,230		0	0	63,548	0	31,683	0	0	0	0	0	0	0	0	0
29	7340	ALLOWANCE FOR FUNDS USED DURING CONSTRUCTION	0	A-3,LN 10	0	0	0	0	0	0	0	0	0	0	0	0	0	0

PUBLIC VERSION

2002 Copyright TIS, Inc. v1.9

PLANT SPECIFIC EXPENSE ALLOCATION

LN	A/C	DESCRIPTION	TOTAL COMPANY	SOURCE	COMMON LINE: LIMITED PAY	COMMON LINE: COMMON LINE	TRAFFIC SENSITIVE: SWITCHING	TRAFFIC SENSITIVE: INFO	TRAFFIC SENSITIVE: COMMON TRANSPORT TERM	TRAFFIC SENSITIVE: COMMON TRANSPORT FACILITY	TRAFFIC SENSITIVE: DEDICATED TRANSPORT	SPECIAL ACCESS: NEL TERMINATION ALLOCATED	SPECIAL ACCESS: NEL TERMINATION TERM	SPECIAL ACCESS: CHANNEL MILEAGE TERM	SPECIAL ACCESS: CHANNEL MILEAGE FACILITY	B&C	IX CATEGORY: MSG	IX CATEGORY: P.L.
		BASIS FOR NETWORK SUPPORT EXPENSE																
1		GEN SUPPORT, COE, IOT AND C&WF	11,637,555	VARIOUS	0	0	7,765,776	0	3,871,779	0	0	0	0	0	0		0	0
2		EQUAL ACCESS EQUIPMENT	0	A-3,LN 8			0											
3		TOTAL	11,637,555		0	0	7,765,776	0	3,871,779	0	0	0	0	0	0		0	0
4		% DISTRIBUTION	100.0000%		0.0000%	0.0000%	66.7303%	0.0000%	33.2697%	0.0000%	0.0000%	0.0000%	0.0000%	0.0000%	0.0000%		0.0000%	0.0000%
		PLANT SPECIFIC EXPENSES																
5		GENERAL SUPPORT EXPENSE																
6	6110	NETWORK SUPPORT	0	LN 4	0	0	0	0	0	0	0	0	0	0	0		0	0
7	6120	GENERAL SUPPORT	456,216	A-3,LN 7	0	0	304,434	0	151,782	0	0	0	0	0	0		0	0
8		TOTAL GENERAL SUPPORT EXP	456,216		0	0	304,434	0	151,782	0	0	0	0	0	0		0	0
9		% DISTRIBUTION	100.0000%		0.0000%	0.0000%	66.7303%	0.0000%	33.2697%	0.0000%	0.0000%	0.0000%	0.0000%	0.0000%	0.0000%		0.0000%	0.0000%
10		CENTRAL OFFICE EXPENSE																
11	6210	CENTRAL OFFICE SWITCHING EXPENSE	405,573	A-4,LN 43	0	0	270,640	0	134,933		0	0	0	0			0	0
12	6220	OPERATOR SYSTEMS EXPENSE	0	A-4,LN 43	0	0	0	0	0		0	0	0	0			0	0
13	6230	CENTRAL OFFICE TRANSMISSION EXPENSE	0	A-4,LN 43	0	0	0	0	0		0	0	0	0			0	0
14		UNDISTRIBUTED	0	A-4,LN 43	0	0	0	0	0		0	0	0	0			0	0
15		TOTAL CENTRAL OFFICE EXPENSE	405,573		0	0	270,640	0	134,933		0	0	0	0			0	0
16		% DISTRIBUTION	100.0000%		0.0000%	0.0000%	66.7303%	0.0000%	33.2697%		0.0000%	0.0000%	0.0000%	0.0000%			0.0000%	0.0000%
17	6310	INFORMATION ORIG/TERM EXPENSE																
18		COIN PAY TELEPHONE	0	DIRECT		0												
19		COINLESS PAY TELEPHONE	0	DIRECT	0													
20		OTHER	0	DIRECT		0							0					
21		CPE	0	DIRECT		0												
22		TOTAL INFORMATION ORIG/TERM EXP	0		0	0							0					
23		% DISTRIBUTION	0.0000%		0.0000%	0.0000%							0.0000%					
24	6410	CABLE AND WIRE FACILITIES EXPENSE	5,421,824	A-5,LN 22	0	0				5,421,824	0	0	0	0	0		0	0
25		TOTAL PLANT SPECIFIC EXPENSE	6,283,613		0	0	575,074	0	286,714	5,421,824	0	0	0	0	0		0	0
26		% DISTRIBUTION	100.0000%		0.0000%	0.0000%	9.1520%	0.0000%	4.5629%	86.2851%	0.0000%	0.0000%	0.0000%	0.0000%	0.0000%		0.0000%	0.0000%

2002 Copyright TIS, Inc. v1.9

PUBLIC VERSION

PLANT NON SPECIFIC EXPENSE ALLOCATION

A-10,1of1

					COMMON LINE		TRAFFIC SENSITIVE					SPECIAL ACCESS						
					LIMITED	COMMON			COMMON TRANSPORT		DEDICATED	NEL TERMINATION		CHANNEL MILEAGE			IX CATEGORY	
LN	A/C	DESCRIPTION	TOTAL COMPANY	SOURCE	PAY	LINE	SWITCHING	INFO	TERM	FACILITY	TRANSPORT	ALLOCATED	TERM	TERM	FACILITY	B&C	MSG	P.L.
1		CENTRAL OFFICE EQUIPMENT	9,752,253	A-4,LN 38	0	0	6,507,708	0	3,244,545		0	0	0	0			0	0
2		INFORMATION ORIG/TERM	0	A-5,LN 10	0	0							0					
3		CABLE AND WIRE FACILITIES	0	A-5,LN 21	0	0				0	0	0	0		0		0	0
4		TOTAL	9,752,253		0	0	6,507,708	0	3,244,545	0	0	0	0	0	0		0	0
5		% DISTRIBUTION	100.0000%		0.0000%	0.0000%	66.7303%	0.0000%	33.2697%	0.0000%	0.0000%	0.0000%	0.0000%	0.0000%	0.0000%		0.0000%	0.0000%
		PLANT NONSPECIFIC EXPENSE																
6	6510	OTHER PROP PLANT & EQUIP EXPENSE	0	LN 5	0	0	0	0	0	0	0	0	0	0	0		0	0
7	6530	NETWORK OPERATIONS EXPENSE	333,884	LN 5	0	0	222,802	0	111,082	0	0	0	0	0	0		0	0
8	6540	ACCESS CHARGE EXPENSE	0	DIRECT													0	0
9	6560	DEPRECIATION EXPENSE																
10		GENERAL SUPPORT	203,494	A-3,LN 7	0	0	135,792	0	67,702	0	0	0	0	0	0		0	0
11		CENTRAL OFFICE SWITCHING EQUIPMENT	829,057	A-4,LN 47			553,232		275,825		0						0	
12		OPERATOR SYSTEMS EQUIPMENT	0	A-4,LN 44			0	0	0		0						0	
13		CENTRAL OFFICE TRANSMISSION	0	A-4,LN 48	0	0			0		0	0	0	0			0	0
14		UNDISTRIBUTED COE	0	A-4,LN 43	0	0	0	0	0		0	0	0	0			0	0
15		INFORMATION ORIG/TERM	0	A-5,LN 11	0	0							0					
16		CABLE AND WIRE FACILITIES	0	A-5,LN 22	0	0				0	0	0	0		0		0	0
17		TOTAL DEP EXP - PLANT IN SERVICE	1,032,551		0	0	689,025	0	343,527	0	0	0	0	0	0		0	0
18		PROPERTY HELD FOR FUTURE USE	0	A-6,LN 7	0	0	0	0	0	0	0	0	0	0	0		0	0
19		TOTAL DEPRECIATION EXPENSE	1,032,551		0	0	689,025	0	343,527	0	0	0	0	0	0		0	0
20		% DISTRIBUTION	100.0000%		0.0000%	0.0000%	66.7303%	0.0000%	33.2697%	0.0000%	0.0000%	0.0000%	0.0000%	0.0000%	0.0000%		0.0000%	0.0000%
		AMORTIZATION EXPENSE																
21	6563	CAPITAL LEASE	0	A-3,LN 10	0	0	0	0	0	0	0	0	0	0	0		0	0
22	6563	LEASEHOLD IMPROVEMNTS	22,756	A-3,LN 10	0	0	15,185	0	7,571	0	0	0	0	0	0		0	0
23	6563	UNDISTRIBUTED	0	A-3,LN 10	0	0	0	0	0	0	0	0	0	0	0		0	0
24		SUBTOTAL	22,756		0	0	15,185	0	7,571	0	0	0	0	0	0		0	0
25	6564	INTANGIBLE ASSETS	0	A-3,LN 10	0	0	0	0	0	0	0	0	0	0	0		0	0
26	6565	OTHER - TEL PLANT ADJUSTMENT	0	A-6,LN 28	0	0	0	0	0	0	0	0	0	0	0		0	0
27		TOTAL AMORTIZATION EXPENSE	22,756		0	0	15,185	0	7,571	0	0	0	0	0	0		0	0
28		% DISTRIBUTION	100.0000%		0.0000%	0.0000%	66.7303%	0.0000%	33.2697%	0.0000%	0.0000%	0.0000%	0.0000%	0.0000%	0.0000%		0.0000%	0.0000%
29		TOTAL PLANT NON SPECIFIC EXPENSE	1,389,192		0	0	927,012	0	462,180	0	0	0	0	0	0		0	0
30		% DISTRIBUTION	100.0000%		0.0000%	0.0000%	66.7303%	0.0000%	33.2697%	0.0000%	0.0000%	0.0000%	0.0000%	0.0000%	0.0000%		0.0000%	0.0000%

PUBLIC VERSION

2002 Copyright TIS, Inc. v1.9

CUSTOMER OPERATIONS EXPENSE ALLOCATION

A-11,1of1

					COMMON LINE		TRAFFIC SENSITIVE					SPECIAL ACCESS						
									COMMON TRANSPORT		DEDICATED	NEL TERMINATION		CHANNEL MILEAGE			IX CATEGORY	
LN	A/C	DESCRIPTION	TOTAL COMPANY	SOURCE	LIMITED PAY	COMMON LINE	SWITCHING	INFO	TERM	FACILITY	TRANSPORT	ALLOCATED	TERM	TERM	FACILITY	B&C	MSG	P.L.
		CUSTOMER OPERATIONS EXPENSES																
1	6610	MARKETING	0	A-3,LN 10	0	0	0	0	0	0	0	0	0	0	0		0	0
2		TELEPHONE OPERATOR SERVICES																
3	6621	- CALL COMPLETION INCL DA	0	/NS-OPERATORS			0	0									0	
4		- OPERATOR SERVICES UNDER CONTRACT	0	DIRECT			0	0									0	
5	6622	PUBLISHED DIRECTORY LISTINGS	0	DIRECT				0										
6	6623	ALL OTHER																
7	1.0	LOCAL BUSINESS OFFICE																
8		- END USER SVC ORDER PROCESSING																
9		- PRESUBSCRIPTION	0	A-3,LN 20	0	0	0	0	0	0	0							
10		- OTHER	0	AL-1,LN 12									0			0	0	
11		- END USER PAYMENT & COLLECTION	0	AL-1,LN 13		0							0			0	0	
12		- END USER BILLING INQUIRY	0	AL-1,LN 14		0							0			0	0	
13		- IX CARRIER SVC ORDER PROCESSING	0	AL-1,LN 15	0	0	0	0	0	0	0		0			0	0	
14		- IX CARRIER PAYMENT & COLLECTION	40,440	AL-1,LN 16	0	0	26,986	0	13,454	0	0		0			0	0	
15		- IX CARRIER BILLING INQUIRY	0	AL-1,LN 17	0	0	0	0	0	0	0		0			0	0	
16		- COIN COLLECT AND ADMINISTRATION	0	AL-1,LN 18	0	0												
17		SUBTOTAL LOCAL BUSINESS OFFICE	40,440		0	0	26,986	0	13,454	0	0	0	0			0	0	
18	2.0	CUSTOMER SERVICES (REV ACCTG)																
19		- MESSAGE PROCESSING																
20		- TOLL TICKET PROCESSING	0	DIRECT												0		
21		- LOCAL MESSAGE PROCESSING	0	DIRECT												0		
22		- OTHER BILLING & COLLECTION	0	DIRECT												0		
23		- END USER COMMON LINE	0	DIRECT		0												
24		- CARRIER ACCESS BILLING (CABS)	38,474	A-3,LN 22			25,674	0	12,800	0	0	0	0	0	0	0	0	0
25		SUBTOTAL CUSTOMER SERVICES	38,474		0	0	25,674	0	12,800	0	0	0	0	0	0	0	0	0
26		TOTAL CAT 1 AND CAT 2	78,913		0	0	52,659	0	26,254	0	0	0	0	0	0	0	0	0
27		% DISTRIBUTION	100.0000%		0.0000%	0.0000%	66.7303%	0.0000%	33.2697%	0.0000%	0.0000%	0.0000%	0.0000%	0.0000%	0.0000%	0.0000%	0.0000%	0.0000%
28	3.0	ALL OTHER CUSTOMER SERVICE	0	/LN 34	0	0	0	0	0	0	0	0	0	0	0	0	0	0
29		TOTAL SERVICES EXPENSE	78,913		0	0	52,659	0	26,254	0	0	0	0	0	0	0	0	0
30		% DISTRIBUTION	100.0000%		0.0000%	0.0000%	66.7303%	0.0000%	33.2697%	0.0000%	0.0000%	0.0000%	0.0000%	0.0000%	0.0000%	0.0000%	0.0000%	0.0000%
31		TOTAL CUSTOMER OPERATIONS EXPENSE	78,913		0	0	52,659	0	26,254	0	0	0	0	0	0	0	0	0
32		% DISTRIBUTION	100.0000%		0.0000%	0.0000%	66.7303%	0.0000%	33.2697%	0.0000%	0.0000%	0.0000%	0.0000%	0.0000%	0.0000%	0.0000%	0.0000%	0.0000%
33		CUSTOMER OPERATIONS EXCL MARKETING	78,913		0	0	52,659	0	26,254	0	0	0	0	0	0	0	0	0
34		% DISTRIBUTION	100.0000%		0.0000%	0.0000%	66.7303%	0.0000%	33.2697%	0.0000%	0.0000%	0.0000%	0.0000%	0.0000%	0.0000%	0.0000%	0.0000%	0.0000%

PUBLIC VERSION

2002 Copyright TIS, Inc. v1.9

A-12,1of1

CORPORATE OPERATIONS EXPENSE ALLOCATION

A-12,1of1

LN	A/C	DESCRIPTION	TOTAL COMPANY	SOURCE	COMMON LINE: LIMITED PAY	COMMON LINE: COMMON LINE	TRAFFIC SENSITIVE: SWITCHING	TRAFFIC SENSITIVE: INFO	TRAFFIC SENSITIVE: COMMON TRANSPORT TERM	TRAFFIC SENSITIVE: COMMON TRANSPORT FACILITY	TRAFFIC SENSITIVE: DEDICATED TRANSPORT	SPECIAL ACCESS: NEL TERMINATION ALLOCATED	SPECIAL ACCESS: NEL TERMINATION TERM	SPECIAL ACCESS: CHANNEL MILEAGE TERM	SPECIAL ACCESS: CHANNEL MILEAGE FACILITY	B&C	IX CATEGORY: MSG	IX CATEGORY: P.L.
		BIG THREE EXPENSES																
1		PLANT SPECIFIC EXPENSE	6,283,613	A-9,LN 25	0	0	575,074	0	286,714	5,421,824	0	0	0	0	0		0	0
2		OTHER PLANT EXPENSE	0	A-10,LN 7	0	0	0	0	0	0	0	0	0	0	0		0	0
3		NETWORK OPERATIONS EXPENSE	333,884	A-10,LN 8	0	0	222,802	0	111,082	0	0	0	0	0	0		0	0
4		ACCESS CHARGE EXPENSE	0	A-10,LN 9													0	0
5		CUSTOMER OPERATIONS EXPENSE	78,913	A-11,LN 31	0	0	52,659	0	26,254	0	0	0	0	0	0	0	0	0
6		TOTAL BIG THREE EXPENSES	6,696,410		0	0	850,535	0	424,051	5,421,824	0	0	0	0	0	0	0	0
7		% DISTRIBUTION	100.0000%		0.0000%	0.0000%	12.7014%	0.0000%	6.3325%	80.9661%	0.0000%	0.0000%	0.0000%	0.0000%	0.0000%	0.0000%	0.0000%	0.0000%
		CORPORATE OPERATING EXPENSE																
8	6710	EXECUTIVE AND PLANNING	149,195	LN 7	0	0	18,950	0	9,448	120,798	0	0	0	0	0	0	0	0
9	6720	GENERAL AND ADMINISTRATIVE	584,935	LN 7	0	0	74,295	0	37,041	473,599	0	0	0	0	0	0	0	0
10		TOTAL CORPORATE OPERATIONS	734,130		0	0	93,244	0	46,489	594,397	0	0	0	0	0	0	0	0
11		% DISTRIBUTION	100.0000%		0.0000%	0.0000%	12.7014%	0.0000%	6.3325%	80.9661%	0.0000%	0.0000%	0.0000%	0.0000%	0.0000%	0.0000%	0.0000%	0.0000%
12		EQUAL ACCESS EXPENSE	0	DIRECT			0											
13	7500	INTEREST EXPENSE																
14		CAPITAL LEASE	0	A-3,LN 10	0	0	0	0	0	0	0	0	0	0	0	0	0	0
15		OTHER	325,440	A-3,LN 10	0	0	217,167	0	108,273	0	0	0	0	0	0	0	0	0
16		TOTAL	325,440		0	0	217,167	0	108,273	0	0	0	0	0	0	0	0	0
17		OTHER INCOME ADJUSTMENTS																
18		BASED ON PLANT	0	A-2,LN 10	0	0	0	0	0	0	0	0	0	0	0	0	0	0
19		BASED ON EXPENSE	0	LN 7	0	0	0	0	0	0	0	0	0	0	0	0	0	0
20		TOTAL	0		0	0	0	0	0	0	0	0	0	0	0	0	0	0
21		OPERATING TAXES																
22	7210	FEDERAL ITC AMORTIZATION	0	A-3,LN 10	0	0	0	0	0	0	0	0	0	0	0	0	0	0
23	7210	STATE ITC AMORTIZATION	0	A-3,LN 10	0	0	0	0	0	0	0	0	0	0	0	0	0	0
24	7240	OTHER OPERATING TAXES	63,711	A-3,LN 10	0	0	42,514	0	21,196	0	0	0	0	0	0	0	0	0
25		TOTAL OPERATING TAXES	63,711		0	0	42,514	0	21,196	0	0	0	0	0	0	0	0	0

IOWA NETWORK ACCESS DIVISION
PROJECTED JUNE 30, 2005

COST SUPPORT MATERIAL
PART 69 COST ALLOCATION

SECTION 3

AL-1,1of1

DEVELOPMENT OF JOINT USE FACILITIES ALLOCATION FACTORS

AL-1,1of1

LN	A/C	DESCRIPTION	TOTAL COMPANY	SOURCE	COMMON LINE: LIMITED PAY	COMMON LINE: COMMON LINE	TRAFFIC SENSITIVE: SWITCHING	TRAFFIC SENSITIVE: INFO	TRAFFIC SENSITIVE: COMMON TRANSPORT TERM	TRAFFIC SENSITIVE: COMMON TRANSPORT FACILITY	TRAFFIC SENSITIVE: DEDICATED TRANSPORT	SPECIAL ACCESS: NEL TERMINATION ALLOCATED	SPECIAL ACCESS: NEL TERMINATION TERM	SPECIAL ACCESS: CHANNEL MILEAGE TERM	SPECIAL ACCESS: CHANNEL MILEAGE FACILITY	B&C	IX CATEGORY: MSG	IX CATEGORY: P.L.
1		EQUIVALENT ACCESS LINES - MSG COE	0		0	0						0						
2		% DISTRIBUTION	0.0000%		0.0000%	0.0000%						0.0000%						
3		EQUIVALENT ACCESS LINES - MSG CWF	0		0	0						0						
4		% DISTRIBUTION	0.0000%		0.0000%	0.0000%						0.0000%						
5		IX CIRCUIT TERMINATIONS - MSG COE	766						766		0							
6		% DISTRIBUTION	100.0000%						100.0000%		0.0000%							
7		IX CIRCUIT MILES - MSG CWF	5,917,585							5917585.00	0.00							
8		% DISTRIBUTION	100.0000%							100.0000%	0.0000%							
		DISTRIBUTION FACTORS																
9		STD WORK SECONDS - MANUAL BOARDS	100.0000%				0.0000%	0.0000%									100.0000%	
10		STD WORK SECONDS - TSPS	100.0000%				0.0000%	0.0000%									100.0000%	
11		STD WORK SECONDS - OPERATORS	100.0000%				0.0000%	0.0000%									100.0000%	
12		END USER SVC ORDER CONTACTS	0.0000%										0.0000%			0.0000%	0.0000%	
13		END USER PAYMENT & COLLECTION	0.0000%			0.0000%							0.0000%			0.0000%	0.0000%	
14		END USER BILLING INQUIRY CONTACTS	0.0000%			0.0000%							0.0000%			0.0000%	0.0000%	
15		IX CARRIER SVC ORDER CONTACTS	100.0000%		0.0000%	0.0000%	66.7303%	0.0000%	33.2697%	0.0000%	0.0000%		0.0000%			0.0000%		
16		IX CARRIER PAYMENT & COLLECTION	100.0000%		0.0000%	0.0000%	66.7303%	0.0000%	33.2697%	0.0000%	0.0000%		0.0000%			0.0000%		
17		IX CARRIER BILLING INQUIRY CONTACTS	100.0000%		0.0000%	0.0000%	66.7303%	0.0000%	33.2697%	0.0000%	0.0000%		0.0000%			0.0000%		
18		PUBLIC TELEPHONE REVENUE	0.0000%		0.0000%	0.0000%												
19		END USER BILLING & COLLECTION	0.0000%													0.0000%		
20		OPERATOR SERVICES UNDER CONTRACT	0.0000%				0.0000%	0.0000%									0.0000%	

2002 Copyright TIS, Inc. v1.9

PUBLIC VERSION

REVENUE REQUIREMENT SUMMARY

LN	ALLOCATION RATIOS		TOTAL COMPANY	ALLOCATION BASIS	INTERSTATE MSG TOLL INTRALATA	INTERSTATE MSG TOLL INTERLATA	OTHER	NONACCESS
	REVENUE REQUIREMENT SUMMARY							
1	NET INVESTMENT FOR SETTLEMENTS		7,948,158	NOTE A	119,712	3,228,827	4,599,619	0
2	RATE OF RETURN				11.2500%	11.2500%	9.5000%	11.2500%
3	RETURN ON INVESTMENT		813,674	LN1*LN 2	13,468	363,243	436,964	0
4	ALLOWANCE FOR FUNDS USED DURING CONSTR		0	S-8,LN 29	0	0	0	0
5	NET RETURN FOR SETTLEMENTS		813,674	LN3-LN4	13,468	363,243	436,964	0
6	TOTAL ITC AMORTIZATION		0	S-12,LN 28+29	0	0	0	0
7	FEDERAL OPERATING INCOME TAX	(ACTUAL)	0	S-12,LN 30	0	0	0	0
8	FEDERAL OPERATING INCOME TAX	(OPTION)	20,945	LN28-LN11	932	25,480	-5,467	0
9	STATE AND LOCAL INCOME TAX	(ACTUAL)	0	S-12,LN 31	0	0	0	0
10	STATE AND LOCAL INCOME TAX	(OPTION)	6,972	LN 33	310	8,482	-1,820	0
11	PROVISION FOR DEFERRED INCOME TAX		0	S-12,LN 33	0	0	0	0
13	OPERATING EXPENSE AND TAX		20,200,625	S-8,LN 18	301,706	8,247,852	11,651,066	0
14	NONOPERATING EXPENSE		21,733	S-8,LN 23	324	8,885	12,524	0
15	UNCOLLECTIBLES		271,799	S-8,LN 28	3,411	91,819	176,569	0
16	BASIS FOR GROSS RECEIPTS TAX		21,335,748		320,152	8,745,761	12,269,835	0
17	GROSS RECEIPTS TAX RATE	(GROSS UP)			0.0000%	0.0000%	0.0000%	0.0000%
18	GROSS RECEIPTS TAX		0		0	0	0	0
19	TOTAL REVENUE REQUIREMENT		21,335,748		320,152	8,745,761	12,269,835	0

NOTE A: INCLUDES NET TEL PLANT FROM SCH S-2,LN 33 LESS A/C's 2004 ,2006 ,2007 AND 1402 OTHER THAN RTB STOCK.

	OPTIONAL GROSS UP INCOME TAX CALCULATION							
20	RETURN ON INVESTMENT		813,674	LN 3	13,468	363,243	0	0
21	INTEREST AND RELATED ITEMS		773,016	S-12,LN 19	11,658	313,782	0	0
22	OTHER INCOME ADJUSTMENTS		0	S-12,LN 24+25	0	0	0	0
23	TOTAL INCOME ADJUSTMENTS		773,016	LN 21+22	11,658	313,782	0	0
24	FEDERAL ITC AMORTIZATION		0	S-12,LN 28	0	0	0	0
25	FEDERAL TAXABLE INCOME		61,603		2,742	74,941	0	0
26	FEDERAL INCOME TAX @	34.00%	20,945	LN 25*FIT	932	25,480	0	0
27	FEDERAL SURTAX ALLOCATION		0	S-2,LN 34	0	0	0	0
28	NET FEDERAL INCOME TAX BEFORE ITC		20,945	LN26-LN27	932	25,480	0	0
29	STATE ITC AMORTIZATION		0	S-12,LN 29	0	0	0	0
30	STATE TAXABLE INCOME		58,103		2,586	70,683	0	0
31	STATE INCOME TAX @	12.00%	6,972	LN 30*SIT	310	8,482	0	0
32	STATE SURTAX EXEMPTION		0	S-2,LN 34	0	0	0	0
33	NET STATE INCOME TAX BEFORE ITC		6,972		310	8,482	0	0

2002 Copyright TIS, Inc. v1.9

S-2,1of1

SUMMARY OF NET TELEPHONE PLANT, M&S AND WORKING CAPITAL

S-2,1of1

LN	ALLOCATION RATIOS		TOTAL COMPANY	ALLOCATION BASIS	INTERSTATE MSG TOLL INTRALATA	INTERLATA	OTHER	NONACCESS
	NET INVESTMENT SUMMARY							
1	GENERAL SUPPORT FACILITIES	2110	4,478,151	S-3,LN 10	67,535	1,817,767	2,592,850	0
2	CENTRAL OFFICE SWITCHING EQUIPMEI	2210	23,164,497	S-4,LN 52	349,344	9,402,910	13,412,244	0
3	OPERATOR SYSTEMS EQUIPMENT	2220	0	S-4,LN 41	0	0	0	0
4	CENTRAL OFFICE TRANSMISSION EQUIP	2230	0	S-4,LN 78	0	0	0	0
5	INFORMATION ORIG/TERM EQUIPMENT	2310	0	S-5,LN 17	0	0	0	0
6	CABLE AND WIRE FACILITIES	2410	0	S-5,LN 42	0	0	0	0
7	TANGIBLE ASSETS	2680	648,643	S-3,LN 29	9,782	263,296	375,564	0
8	INTANGIBLE ASSETS	2690	283,691	S-3,LN 36	4,278	115,156	164,257	0
9	TOTAL PLANT IN SERVICE A/C 2001		28,574,983		430,939	11,599,128	16,544,915	0
10	% DISTRIBUTION		100.0000%		1.5081%	40.5919%	57.9000%	0.0000%
11	PROPERTY HELD FOR FUTURE USE	2002	0	S-6,LN 9	0	0	0	0
12	PLANT UNDER CONSTR - SHORT TERM	2003	0	S-6,LN 15	0	0	0	0
13	PLANT UNDER CONSTR - LONG TERM	2004	0	S-6,LN 21	0	0	0	0
14	TELEPHONE PLANT ADJUSTMENT	2005	0	S-6,LN 27	0	0	0	0
15	NONOPERATING PLANT	2006	0	DIRECT				0
16	GOODWILL	2007	0	DIRECT				0
17	TOTAL PROPERTY, PLANT & EQUIPMENT		28,574,983		430,939	11,599,128	16,544,915	0
18	% DISTRIBUTION		100.0000%		1.5081%	40.5919%	57.9000%	0.0000%
19	ACCUM DEPRECIATION - PLANT IN SERV	3100	16,526,224	S-7,LN 18	249,232	6,708,308	9,568,684	0
20	ACCUM DEPRECIATION - FUTURE USE	3200	0	S-7,LN 19	0	0	0	0
21	ACCUM AMORTIZATION - TANGIBLE PRO	3400	495,726	S-7,LN 23	7,476	201,224	287,025	0
22	ACCUM AMORTIZATION - INTANGIBLE PF	3500	283,691	S-7,LN 24	4,278	115,156	164,257	0
23	ACCUM AMORTIZATION - TEL PLANT ADJ	3600	0	S-7,LN 25	0	0	0	0
24	OPERATING DEFERRED INCOME TAX - N	VAR	4,184,212	S-7,LN 32	63,102	1,698,451	2,422,659	0
25	OTHER DEFERRED CREDITS - NET	4360	0	S-7,LN 38	0	0	0	0
26	NET TELEPHONE PLANT		7,085,129		106,851	2,875,989	4,102,290	0
27	% DISTRIBUTION		100.0000%		1.5081%	40.5919%	57.9000%	0.0000%
28	MATERIALS AND SUPPLIES	1220	0	S-6,LN 31	0	0	0	0
29	INVESTMENT IN NONAFFILIATED CO'S	1402	0	S-6,LN 35	0	0	0	0
30	EQUAL ACCESS EQUIPMENT	1439	0	S-6,LN 36	0	0	0	0
31	OTHER JURISDICTIONAL ASSETS	1500	0	S-6,LN 37	0	0	0	0
32	CASH WORKING CAPITAL	XXXX	863,029	S-3,LN 3	12,861	352,838	497,329	0
33	NET TEL PLANT, M&S AND CASH WORKING CAPITAL		7,948,158		119,712	3,228,827	4,599,619	0
34	% DISTRIBUTION		100.0000%		1.5062%	40.6236%	57.8702%	0.0000%

2002 Copyright TIS, Inc. v1.9

S-8,1of1

SUMMARY OF OPERATING EXPENSE AND TAX

S-8,1of1

LN	ALLOCATION RATIOS		TOTAL COMPANY	ALLOCATION BASIS	INTERSTATE MSG TOLL INTRALATA	INTERLATA	OTHER	NONACCESS
	OPERATING EXPENSE AND TAX SUMMARY							
1	NETWORK SUPPORT EXPENSE	6110	0	S-9,LN 7	0	0	0	0
2	GENERAL SUPPORT EXPENSE	6120	1,083,648	S-9,LN 8	16,342	439,873	627,432	0
3	CENTRAL OFFICE EXPENSE	6210	963,356	S-9,LN 15	14,528	391,044	557,783	0
4	INFORMATION ORIG/TERM EXPENSE	6310	0	S-9,LN 21	0	0	0	0
5	CABLE AND WIRE FACILITIES EXPENSE	6410	12,777,678	S-9,LN 25	190,145	5,231,680	7,355,854	0
6	OTHER PLANT EXPENSE	6510	0	S-10,LN 11	0	0	0	0
7	NETWORK OPERATIONS EXPENSE	6530	793,074	S-10,LN 13	11,960	321,924	459,190	0
8	ACCESS CHARGE EXPENSE	6540	0	S-10,LN 14	0	0	0	0
9	MARKETING EXPENSE	6610	0	S-11,LN 13	0	0	0	0
10	SERVICES EXPENSE	6620	192,367	S-11,LN 44	2,827	76,087	113,454	0
11	EXECUTIVE AND PLANNING EXPENSE	6710	352,092	S-12,LN 8+9	5,247	143,948	202,896	0
12	GENERAL AND ADMINISTRATIVE EXPENS	6720	1,380,410	S-12,LN 11+12	20,571	564,363	795,475	0
13	SUBTOTAL OPERATING EXPENSES		17,542,625		261,621	7,168,919	10,112,084	0
14	% DISTRIBUTION		100.0000%		1.4913%	40.8657%	57.6429%	0.0000%
15	DEPRECIATION AND AMORTIZATION	6560	2,506,669	S-10,LN 22+29	37,803	1,017,504	1,451,361	0
16	OTHER OPERATING TAX	7240	151,332	S-12,LN 32	2,282	61,428	87,621	0
17	EQUAL ACCESS EXPENSE		0	S-12,LN 15	0	0	0	0
18	TOTAL OPERATING EXPENSE AND TAX		20,200,625		301,706	8,247,852	11,651,066	0
19	% DISTRIBUTION		100.0000%		1.4935%	40.8297%	57.6768%	0.0000%
	NON OPERATING EXPENSE	7370						
20	ABANDONED CONSTRUCTION		0	S-2,LN 10	0	0	0	0
21	CONTRIBUTIONS		21,733	S-12,LN 14	324	8,885	12,524	0
22	OTHER NON OPERATING EXPENSE		0	DIRECT				0
23	TOTAL NON OPERATING EXPENSE		21,733		324	8,885	12,524	0
24	% DISTRIBUTION		100.0000%		1.4902%	40.8837%	0.0000%	0.0000%
	UNCOLLECTIBLES							
25	END USER MSG TOLLS	5310	0	DIRECT	0	0	0	0
26	END USER COMMON LINE	5320	0	DIRECT	0	0	0	0
27	IX CARRIER	5330	271,799	S-11,LN 5	3,411	91,819	176,569	0
28	TOTAL UNCOLLECTIBLES		271,799		3,411	91,819	176,569	0
29	ALLOWANCE FOR FUNDS USED DURING	7340	0	S-12,LN 3	0	0	0	0

2002 Copyright TIS, Inc. v1.9

S-1,1of1

REVENUE REQUIREMENT SUMMARY

LN	DESCRIPTION	A/C	CAT	TOTAL COMPANY	ALLOCATION BASIS	ACCESS DIVISION	ALL OTHER
	REVENUE REQUIREMENT SUMMARY						
1	NET INVESTMENT FOR SETTLEMENTS			36,517,890	NOTE A	7,948,158	28,569,732
2	RATE OF RETURN					10.2373%	9.6106%
3	RETURN ON INVESTMENT			3,559,394	LN1*LN 2	813,674	2,745,720
4	ALLOWANCE FOR FUNDS USED DURING CONSTR			0	S-8,LN 30	0	0
5	NET RETURN FOR SETTLEMENTS			3,559,394	LN 3-LN 4	813,674	2,745,720
6	TOTAL ITC AMORTIZATION			0	S-12,LN 32	0	0
7	FEDERAL OPERATING INCOME TAX		(ACTUAL)	0		0	0
8	FEDERAL OPERATING INCOME TAX		(OPTION)	-29,755	LN28-LN11	20,945	-50,700
9	STATE AND LOCAL INCOME TAX		(ACTUAL)	0		0	0
10	STATE AND LOCAL INCOME TAX		(OPTION)	-9,905	LN 32	6,972	-16,877
11	PROVISION FOR DEFERRED INCOME TAX			0	S-12,LN 36	0	0
13	OPERATING EXPENSE AND TAX			68,487,906	S-8,LN 20	20,200,625	48,287,281
14	NONOPERATING EXPENSE			54,507	S-8,LN 25	21,733	32,774
15	UNCOLLECTIBLES			583,546	S-8,LN 29	271,799	311,747
16	BASIS FOR GROSS RECEIPTS TAX			72,645,693		21,335,748	51,309,945
17	GROSS RECEIPTS TAX RATE		(GROSS UP)			0.0000%	0.0000%
18	GROSS RECEIPTS TAX			0		0	0
19	TOTAL REVENUE REQUIREMENT			72,645,693		21,335,748	51,309,945

NOTE A: INCLUDES NET TEL PLANT FROM SCH S-2,LN 33 LESS A/C's 2004 ,2006 ,2007 AND 1402.

	OPTIONAL GROSS UP INCOME TAX CALCULATION						
20	RETURN ON INVESTMENT			3,559,394	LN 3	813,674	2,745,720
21	INTEREST AND RELATED ITEMS			7,450,421	S-12,LN 22	773,016	6,677,405
22	OTHER INCOME ADJUSTMENTS			-3,833,268	S-12,LN 27+28	0	-3,833,268
23	TOTAL INCOME ADJUSTMENTS			3,617,153	LN 21+22	773,016	2,844,137
24	FEDERAL ITC AMORTIZATION			0	S-12,LN 32	0	0
25	FEDERAL TAXABLE INCOME			-87,514		61,603	-149,117
26	FEDERAL INCOME TAX	@	34.00%	-29,755	LN 25*FIT	20,945	-50,700
27	FEDERAL SURTAX ALLOCATION			0	S-2,LN 32	0	0
28	NET FEDERAL INCOME TAX BEFORE ITC			-29,755	LN26-LN27	20,945	-50,700
29	STATE TAXABLE INCOME			-82,542		58,103	-140,644
30	STATE INCOME TAX	@	12.00%	-9,905	LN 29*SIT	6,972	-16,877
31	STATE SURTAX EXEMPTION			0	S-2,LN 32	0	0
32	NET STATE INCOME TAX BEFORE ITC			-9,905	LN30-LN31	6,972	-16,877

2002 Copyright TIS, Inc. v1.9

S-2,1of1

SUMMARY OF NET TELEPHONE PLANT, M&S AND WORKING CAPITAL

S-2,1of1

LN	DESCRIPTION	A/C	CAT	TOTAL COMPANY	ALLOCATION BASIS	ACCESS DIVISION	ALL OTHER
	NET INVESTMENT SUMMARY						
1	GENERAL SUPPORT FACILITIES	2110		13,592,532	S-3,LN 27	4,478,151	9,114,381
2	CENTRAL OFFICE SWITCHING EQUIPME	2210		36,639,221	S-4,LN 17	23,164,497	13,474,724
3	CENTRAL OFFICE TRANSMISSION EQUIF	2230		39,811,366	S-4,LN 31	0	39,811,366
4	CABLE AND WIRE FACILITIES	2410		21,331,701	S-5,LN 16	0	21,331,701
5	TANGIBLE ASSETS	2680		1,968,825	S-3,LN 54	648,643	1,320,182
6	INTANGIBLE ASSETS	2690		1,136,555	S-3,LN 61	283,691	852,864
7	TOTAL PLANT IN SERVICE A/C 2001			114,480,200		28,574,983	85,905,217
8	% DISTRIBUTION			100.0000%		24.9606%	75.0394%
9	PROPERTY HELD FOR FUTURE USE	2002		0	S-6,LN 9	0	0
10	PLANT UNDER CONSTR - SHORT TERM	2003		0	S-6,LN 15	0	0
11	PLANT UNDER CONSTR - LONG TERM	2004		0	S-6,LN 21	0	0
12	TELEPHONE PLANT ADJUSTMENT	2005		0	S-6,LN 27	0	0
13	NONOPERATING PLANT	2006		0	DIRECT		
14	GOODWILL	2007		0	DIRECT		
15	TOTAL PROPERTY, PLANT & EQUIPMENT			114,480,200		28,574,983	85,905,217
16	% DISTRIBUTION			100.0000%		24.9606%	75.0394%
17	ACCUM DEPRECIATION - PLANT IN SERV	3100		61,827,139	S-7,LN 30	16,526,224	45,300,915
18	ACCUM DEPRECIATION - FUTURE USE	3200		0	S-7,LN 31	0	0
19	ACCUM AMORTIZATION - TANGIBLE PRC	3400		1,504,676	S-7,LN 36	495,726	1,008,950
20	ACCUM AMORTIZATION - INTANGIBLE PI	3500		1,136,555	S-7,LN 37	283,691	852,864
21	ACCUM AMORTIZATION - TEL PLANT AD.	3600		0	S-7,LN 38	0	0
22	OPERATING DEFERRED INCOME TAX - N	VAR		16,858,582	S-7,LN 44	4,184,212	12,674,370
23	OTHER DEFERRED CREDITS - NET	4360		0	S-7,LN 49	0	0
24	NET TELEPHONE PLANT			33,153,248		7,085,129	26,068,119
25	% DISTRIBUTION			100.0000%		21.3708%	78.6292%
26	MATERIALS AND SUPPLIES	1220		221,021	S-6,LN 32	0	221,021
27	PREPAID EXPENSES	1300		0	S-6,LN 37	0	0
28	INVESTMENT IN NONAFFILIATED CO'S	1402		0	S-6,LN 38	0	0
29	OTHER JURISDICTIONAL ASSETS	1500		0	S-6,LN 39	0	0
30	CASH WORKING CAPITAL	XXXX		3,143,621	COMPUTED	863,029	2,280,593
31	NET TEL PLANT, M&S AND CASH WORKING CAPITAL			36,517,890		7,948,158	28,569,732
32	% DISTRIBUTION			100.0000%		21.7651%	78.2349%

2002 Copyright TIS, Inc. v1.9

S-8,1of1

SUMMARY OF OPERATING EXPENSE AND TAX

S-8,1of1

LN	DESCRIPTION	A/C	CAT	TOTAL COMPANY	ALLOCATION BASIS	ACCESS DIVISION	ALL OTHER
	OPERATING EXPENSE AND TAX SUMMARY						
1	NETWORK SUPPORT EXPENSE	6110		187,147	S-9,LN 13-23	62,473	124,674
2	GENERAL SUPPORT EXPENSE	6120		2,757,350	S-9,LN 24-27	1,021,174	1,736,176
3	CENTRAL OFFICE EXPENSE	6210		2,841,391	S-9,LN 33	963,356	1,878,035
4	CABLE AND WIRE FACILITIES EXPENSE	6410		26,868,987	S-9,LN 35	12,777,678	14,091,309
5	OTHER PLANT EXPENSE	6510		0	S-10,LN 6	0	0
6	NETWORK OPERATIONS EXPENSE	6530		3,371,263	S-10,LN 13	793,074	2,578,189
7	ACCESS CHARGE EXPENSE	6540		14,781,104	S-10,LN 15	0	14,781,104
8	MARKETING EXPENSE	6610		2,145,901	S-11,LN 15	0	2,145,901
9	SERVICES EXPENSE	6620		1,428,191	S-11,LN 39	192,367	1,235,824
10	EXECUTIVE AND PLANNING EXPENSE	6710		909,336	S-12,LN 7	352,092	557,244
11	GENERAL AND ADMINISTRATIVE EXPEN:	6720		3,296,902	S-12,LN 8-15	1,380,410	1,916,492
12	SUBTOTAL OPERATING EXPENSES			58,587,572		17,542,625	41,044,947
13	% DISTRIBUTION			100.0000%		29.9426%	70.0574%
14	DEPRECIATION - PLANT IN SERVICE	6561		9,129,986	S-10,LN 33	2,452,616	6,677,370
15	DEPRECIATION - FUTURE USE	6562		0	S-10,LN 34	0	0
16	AMORTIZATION - TANGIBLES	6563		164,066	S-3,LN42-44	54,053	110,013
17	AMORTIZATION - INTANGIBLES	6564		0	S-3,LN 45	0	0
18	AMORTIZATION - OTHER	6565		0	S-3,LN 46	0	0
19	OTHER OPERATING TAX	7240		606,282	S-12,LN 35	151,332	454,950
20	TOTAL OPERATING EXPENSE AND TAX			68,487,906		20,200,625	48,287,281
21	% DISTRIBUTION			100.0000%		29.4952%	70.5048%
	NON OPERATING EXPENSE	7370					
22	ABANDONED CONSTRUCTION			0	S-2,LN 8	0	0
23	CONTRIBUTIONS			54,507	S-12,LN 2	21,733	32,774
24	ALL OTHER			0	S-12,LN 2	0	0
25	TOTAL NON OPERATING EXPENSE			54,507		21,733	32,774
26	% DISTRIBUTION			100.0000%		39.8711%	60.1289%
	UNCOLLECTIBLES						
27	END USER MSG TOLLS	5310		311,747	DIRECT	XXX	311,747
28	IX CARRIER	5330		271,799	DIRECT	271,799	
29	TOTAL UNCOLLECTIBLES			583,546		271,799	311,747
30	ALLOWANCE FOR FUNDS USED DURING	7340		0	S-12,LN 4	0	0

2002 Copyright TIS, Inc. v1.9

COS-1(P)
Filing Date: 6/24/2004
Filing Entity: Iowa Network Access Division
Transmittal Number : 22
COSA: INIAAN03

Rate-of-Return TRP
Cost Analysis Summary
Test Year, 7/04 - 7/05

PUBLIC VERSION

		Total Company (A)	Part 64 Adjustments (B)	Other Adjustments (C)	Subject to Separations (D)	Total Interstate (E)
	Revenues					
100	Network Access	n/a	n/a	n/a	n/a	n/a
110	Uncollectibles	n/a	n/a	n/a	n/a	n/a
120	Common Line Support	n/a	n/a	n/a	n/a	n/a
130	Long Term	n/a	n/a	n/a	n/a	n/a
140	Transitional	n/a	n/a	n/a	n/a	n/a
150	Miscellaneous	n/a	n/a	n/a	n/a	n/a
160	Net Revenues	n/a	n/a	n/a	n/a	n/a
		---	---	---	---	---
	Expenses	---	---	---	---	---
170	Plant Specific	n/a	n/a	n/a	n/a	6,283,613
171	Network Support	0	0	0	0	0
172	General Support	1,083,648	0	0	1,083,648	456,216
173	Central Office	963,356	0	0	963,356	405,573
174	Operator Systems	0	0	0	0	0
175	COE Switching	963,356	0	0	963,356	405,573
176	COE Transmission	0	0	0	0	0
177	IOT	0	0	0	0	0
178	Cable & Wire Facilities	12,777,678	0	0	12,777,678	5,421,824
180	Plant Non-Sp. Less Dep/Amor	n/a	n/a	n/a	n/a	333,884
190	Depreciation / Amortization	2,506,669	0	0	2,506,669	1,055,307
200	Customer Operations	n/a	n/a	n/a	n/a	78,914
201	Marketing	0	0	0	0	0
202	Local Business Office	115,420	0	0	115,420	40,440
203	Revenue Accounting	76,947	0	0	76,947	38,474
204	Other Billing & Collection	0	0	0	0	0
210	Access	n/a	n/a	n/a	n/a	0
220	Corporate Operations	n/a	n/a	n/a	n/a	734,130
230	AFUDC	n/a	n/a	n/a	n/a	n/a
240	Other Exp. & Adjustments	n/a	n/a	n/a	n/a	9,209
250	Taxes Other than FIT	n/a	n/a	n/a	n/a	72,503
260	Total Exp and Other Taxes	n/a	n/a	n/a	n/a	8,567,560
		---	---	---	---	---
	FIT Adjustments	---	---	---	---	---
270	Adjustment for FIT	773,016	0	0	773,016	325,440
280	Amortized ITC	0	0	0	0	0
290	Federal Income Taxes	n/a	n/a	n/a	n/a	0
		---	---	---	---	---
300	Total Expenses & Taxes	n/a	n/a	n/a	n/a	8,242,120
		---	---	---	---	---
	Telephone Plant in Service	---	---	---	---	---
310	General Support	4,478,151	0	0	4,478,151	1,885,302
320	Central Office Equip-Switch	23,164,497	0	0	23,164,497	9,752,253
321	Operator Systems	0	0	0	0	0
322	Tandem Switching	0	0	0	0	0
323	Local Switching Cat. 3	0	0	0	0	0
324	Equal Access	23,164,497	0	0	23,164,497	9,752,253
330	Central Office Equip-Trans	0	0	0	0	0
331	Subscriber Lines	0	0	0	0	0
332	Exchange Circuit	0	0	0	0	0
333	Interexchange Circuit	0	0	0	0	0
334	Host Remote	0	0	0	0	0
340	Cable & Wire	0	0	0	0	0
341	Subscriber Lines	0	0	0	0	0
342	Exchange	0	0	0	0	0
343	Interexchange	0	0	0	0	0
344	Host Remote	0	0	0	0	0
350	Info Orig/Term Equipment	0	0	0	0	0
360	Amortizable Assets	932,334	0	0	932,334	392,513
370	Total Plant In Service	28,574,982	0	0	28,574,982	12,030,068
		---	---	---	---	---
	Adjustments to TPIS	---	---	---	---	---
380	Depr / Amor Reserve	17,305,641	0	0	17,305,641	7,285,675
390	Accum Deferred Income Tax	4,184,212	0	0	4,184,212	1,761,553
400	Other Rate Base Adjust.	n/a	n/a	n/a	n/a	365,700
		---	---	---	---	---
	Return Data	---	---	---	---	---
410	Average Rate Base	n/a	n/a	n/a	n/a	3,348,540
420	Return	n/a	n/a	n/a	n/a	n/a
430	Rate of Return	n/a	n/a	n/a	n/a	n/a

COS-1(P)
Filing Date: 6/24/2004
Filing Entity: Iowa Network Access Divisi
Transmittal Number : 22
COSA: INIAAN03

		Billing & Collection (F)	Interstate Inter-exchange (G)	ROR Regulated I/S Access (H)	Pay Phone (I)	Inside Wire (J)	BFP (K)	Total Common Line (L)
	Revenues							
100	Network Access	n/a	n/a	9,033,947	0	0	0	0
110	Uncollectibles	n/a	n/a	(95,230)	0	0	0	0
120	Common Line Support	n/a	n/a	0	0	0	0	0
130	Long Term	n/a	n/a	0	0	0	0	0
140	Transitional	n/a	n/a	0	0	0	0	0
150	Miscellaneous	n/a	n/a	31,966	0	0	0	0
160	Net Revenues	n/a	n/a	8,970,683	0	0	0	0
	Expenses							
170	Plant Specific	0	0	6,283,613	0	0	0	0
171	Network Support	0	0	0	0	0	0	0
172	General Support	0	0	456,216	0	0	0	0
173	Central Office	0	0	405,573	0	0	0	0
174	Operator Systems	0	0	0	0	0	0	0
175	COE Switching	0	0	405,573	0	0	0	0
176	COE Transmission	0	0	0	0	0	0	0
177	IOT	0	0	0	0	0	0	0
178	Cable & Wire Facilities	0	0	5,421,824	0	0	0	0
180	Plant Non-Sp. Less Dep/Amor	0	0	333,884	0	0	0	0
190	Depreciation / Amortization	0	0	1,055,307	0	0	0	0
200	Customer Operations	0	0	78,914	0	0	0	0
201	Marketing	0	0	0	0	0	0	0
202	Local Business Office	0	0	40,440	0	0	0	0
203	Revenue Accounting	0	0	38,474	0	0	0	0
204	Other Billing & Collection	0	0	0	0	0	0	0
210	Access	n/a	0	n/a	n/a	n/a	n/a	n/a
220	Corporate Operations	0	0	734,130	0	0	0	0
230	AFUDC	n/a	n/a	0	0	0	0	0
240	Other Exp. & Adjustments	0	0	9,209	0	0	0	0
250	Taxes Other than FIT	0	0	72,503	0	0	0	0
260	Total Exp and Other Taxes	0	0	8,567,560	0	0	0	0
	FIT Adjustments							
270	Adjustment for FIT	0	0	325,440	0	0	0	0
280	Amortized ITC	0	0	0	0	0	0	0
290	Federal Income Taxes	n/a	n/a	26,412	0	0	0	0
300	Total Expenses & Taxes	n/a	n/a	8,268,532	0	0	0	0
	Telephone Plant in Service							
310	General Support	0	0	1,885,302	0	0	0	0
320	Central Office Equip-Switch	0	0	9,752,253	0	0	0	0
321	Operator Systems	0	0	0	0	0	0	0
322	Tandem Switching	0	0	0	0	0	0	0
323	Local Switching Cat. 3	0	0	0	0	0	0	0
324	Equal Access	0	0	9,752,253	0	0	0	0
330	Central Office Equip-Trans	0	0	0	0	0	0	0
331	Subscriber Lines	0	0	0	0	0	0	0
332	Exchange Circuit	0	0	0	0	0	0	0
333	Interexchange Circuit	0	0	0	0	0	0	0
334	Host Remote	0	0	0	0	0	0	0
340	Cable & Wire	0	0	0	0	0	0	0
341	Subscriber Lines	0	0	0	0	0	0	0
342	Exchange	0	0	0	0	0	0	0
343	Interexchange	0	0	0	0	0	0	0
344	Host Remote	0	0	0	0	0	0	0
350	Info Orig/Term Equipment	0	0	0	0	0	0	0
360	Amortizable Assets	0	0	392,513	0	0	0	0
370	Total Plant In Service	0	0	12,030,068	0	0	0	0
	Adjustments to TPIS							
380	Depr / Amor Reserve	0	0	7,285,675	0	0	0	0
390	Accum Deferred Income Tax	0	0	1,761,553	0	0	0	0
400	Other Rate Base Adjust.	0	0	365,700	0	0	0	0
	Return Data							
410	Average Rate Base	n/a	n/a	3,348,540	0	0	0	0
420	Return	n/a	n/a	376,711	0	0	0	0
430	Rate of Return	n/a	11.25%	11.25%	0.00%	0.00%	0.00%	0.00%

PUBLIC VERSION

PUBLIC VERSION

		Local Switching (M)	Equal Access (N)	SS7 (O)	Information (P)	Tandem Switching (Q)	Local Transport (R)
	Revenues						
100	Network Access	0	0	0	0	0	9,033,947
110	Uncollectibles	0	0	0	0	0	(95,230)
120	Common Line Support	0	n/a	n/a	n/a	n/a	n/a
130	Long Term	0	n/a	n/a	n/a	n/a	n/a
140	Transitional	0	n/a	n/a	n/a	n/a	n/a
150	Miscellaneous	0	0	0	0	0	31,966
160	Net Revenues	0	0	0	0	0	8,970,683
		---	---	---	---	---	---
	Expenses	---	---	---	---	---	---
170	Plant Specific	0	0	0	0	0	6,283,613
171	Network Support	0	0	0	0	0	0
172	General Support	0	0	0	0	0	456,216
173	Central Office	0	0	0	0	0	405,573
174	Operator Systems	0	0	0	0	0	0
175	COE Switching	0	0	0	0	0	405,573
176	COE Transmission	0	0	0	0	0	0
177	IOT	0	0	0	0	0	0
178	Cable & Wire Facilities	0	0	0	0	0	5,421,824
180	Plant Non-Sp. Less Dep/Amor	0	0	0	0	0	333,884
190	Depreciation / Amortization	0	0	0	0	0	1,055,307
200	Customer Operations	0	0	0	0	0	78,914
201	Marketing	0	0	0	0	0	0
202	Local Business Office	0	0	0	0	0	40,440
203	Revenue Accounting	0	0	0	0	0	38,474
204	Other Billing & Collection	0	0	0	0	0	0
210	Access	n/a	n/a	n/a	n/a	n/a	n/a
220	Corporate Operations	0	0	0	0	0	734,130
230	AFUDC	0	0	0	0	0	0
240	Other Exp. & Adjustments	0	0	0	0	0	9,209
250	Taxes Other than FIT	0	0	0	0	0	72,503
260	Total Exp and Other Taxes	0	0	0	0	0	8,567,560
		---	---	---	---	---	---
	FIT Adjustments	---	---	---	---	---	---
270	Adjustment for FIT	0	0	0	0	0	325,440
280	Amortized ITC	0	0	0	0	0	0
290	Federal Income Taxes	0	0	0	0	0	26,412
		---	---	---	---	---	---
300	Total Expenses & Taxes	0	0	0	0	0	8,268,532
		---	---	---	---	---	---
	Telephone Plant in Service	---	---	---	---	---	---
310	General Support	0	0	0	0	0	1,885,302
320	Central Office Equip-Switch	0	0	0	0	0	9,752,253
321	Operator Systems	0	0	0	0	0	0
322	Tandem Switching	0	0	0	0	0	0
323	Local Switching Cat. 3	0	0	0	0	0	0
324	Equal Access	0	0	0	0	0	9,752,253
330	Central Office Equip-Trans	0	0	0	0	0	0
331	Subscriber Lines	0	0	0	0	0	0
332	Exchange Circuit	0	0	0	0	0	0
333	Interexchange Circuit	0	0	0	0	0	0
334	Host Remote	0	0	0	0	0	0
340	Cable & Wire	0	0	0	0	0	0
341	Subscriber Lines	0	0	0	0	0	0
342	Exchange	0	0	0	0	0	0
343	Interexchange	0	0	0	0	0	0
344	Host Remote	0	0	0	0	0	0
350	Info Orig/Term Equipment	0	0	0	0	0	0
360	Amortizable Assets	0	0	0	0	0	392,513
370	Total Plant In Service	0	0	0	0	0	12,030,068
		---	---	---	---	---	---
	Adjustments to TPIS	---	---	---	---	---	---
380	Depr / Amor Reserve	0	0	0	0	0	7,285,675
390	Accum Deferred Income Tax	0	0	0	0	0	1,761,553
400	Other Rate Base Adjust.	0	0	0	0	0	365,700
		---	---	---	---	---	---
	Return Data	---	---	---	---	---	---
410	Average Rate Base	0	0	0	0	0	3,348,540
420	Return	0	0	0	0	0	376,711
430	Rate of Return	0.00%	0.00%	0.00%	0.00%	0.00%	11.25%

		Host Remote (S)	Total Switched Traffic Sensitive (T)	Special Access (U)
	Revenues			
100	Network Access	0	9,033,947	0
110	Uncollectibles	0	(95,230)	0
120	Common Line Support	n/a	n/a	n/a
130	Long Term	n/a	n/a	n/a
140	Transitional	n/a	n/a	n/a
150	Miscellaneous	0	31,966	0
160	Net Revenues	0	8,970,683	0
	Expenses			
170	Plant Specific	0	6,283,613	0
171	Network Support	0	0	0
172	General Support	0	456,216	0
173	Central Office	0	405,573	0
174	Operator Systems	0	0	0
175	COE Switching	0	405,573	0
176	COE Transmission	0	0	0
177	IOT	0	0	0
178	Cable & Wire Facilities	0	5,421,824	0
180	Plant Non-Sp. Less Dep/Amor	0	333,884	0
190	Depreciation / Amortization	0	1,055,307	0
200	Customer Operations	0	78,914	0
201	Marketing	0	0	0
202	Local Business Office	0	40,440	0
203	Revenue Accounting	0	38,474	0
204	Other Billing & Collection	0	0	0
210	Access	n/a	n/a	n/a
220	Corporate Operations	0	734,130	0
230	AFUDC	0	0	0
240	Other Exp. & Adjustments	0	9,209	0
250	Taxes Other than FIT	0	72,503	0
260	Total Exp and Other Taxes	0	8,567,560	0
	FIT Adjustments			
270	Adjustment for FIT	0	325,440	0
280	Amortized ITC	0	0	0
290	Federal Income Taxes	0	26,412	0
300	Total Expenses & Taxes	0	8,268,532	0
	Telephone Plant in Service			
310	General Support	0	1,885,302	0
320	Central Office Equip-Switch	0	9,752,253	0
321	Operator Systems	0	0	0
322	Tandem Switching	0	0	0
323	Local Switching Cat. 3	0	0	0
324	Equal Access	0	9,752,253	0
330	Central Office Equip-Trans	0	0	0
331	Subscriber Lines	0	0	0
332	Exchange Circuit	0	0	0
333	Interexchange Circuit	0	0	0
334	Host Remote	0	0	0
340	Cable & Wire	0	0	0
341	Subscriber Lines	0	0	0
342	Exchange	0	0	0
343	Interexchange	0	0	0
344	Host Remote	0	0	0
350	Info Orig/Term Equipment	0	0	0
360	Amortizable Assets	0	392,513	0
370	Total Plant In Service	0	12,030,068	0
	Adjustments to TPIS			
380	Depr / Amor Reserve	0	7,285,675	0
390	Accum Deferred Income Tax	0	1,761,553	0
400	Other Rate Base Adjust.	0	365,700	0
	Return Data			
410	Average Rate Base	0	3,348,540	0
420	Return	0	376,711	0
430	Rate of Return	0.00%	11.25%	0.00%

PUBLIC VERSION

COS-1(H)
Filing Date: 6/24/2004
Filing Entity: Iowa Network Access Division
Transmittal Number : 22
COSA: INIAAN03
Page 5 of 31

Rate-of Return TRP
Cost Analysis Summary
Historical, Calendar Year 2003

		Total Company (A)	Part 64 Adjustments (B)	Other Adjustments (C)	Subject to Separations (D)	Total Interstate (E)
	Revenues					
100	Network Access	n/a	n/a	n/a	n/a	n/a
110	Uncollectibles	n/a	n/a	n/a	n/a	n/a
120	Common Line Support	n/a	n/a	n/a	n/a	n/a
130	Long Term	n/a	n/a	n/a	n/a	n/a
140	Transitional	n/a	n/a	n/a	n/a	n/a
150	Miscellaneous	n/a	n/a	n/a	n/a	n/a
160	Net Revenues	n/a	n/a	n/a	n/a	n/a
	Expenses					
170	Plant Specific	n/a	n/a	n/a	n/a	5,914,794
171	Network Support	0	0	0	0	0
172	General Support	812,130	0	0	812,130	354,002
173	Central Office	855,120	0	0	855,120	372,741
174	Operator Systems	0	0	0	0	0
175	COE Switching	855,120	0	0	855,120	372,741
176	COE Transmission	0	0	0	0	0
177	IOT	0	0	0	0	0
178	Cable & Wire Facilities	11,740,832	0	0	11,740,832	5,188,051
180	Plant Non-Sp. Less Dep/Amor	n/a	n/a	n/a	n/a	318,900
190	Depreciation / Amortization	2,386,202	0	0	2,386,202	1,040,129
200	Customer Operations	n/a	n/a	n/a	n/a	76,355
201	Marketing	0	0	0	0	0
202	Local Business Office	112,031	0	0	112,031	39,011
203	Revenue Accounting	74,688	0	0	74,688	37,344
204	Other Billing & Collection	0	0	0	0	0
210	Access	n/a	n/a	n/a	n/a	0
220	Corporate Operations	n/a	n/a	n/a	n/a	684,349
230	AFUDC	n/a	n/a	n/a	n/a	n/a
240	Other Exp. & Adjustments	n/a	n/a	n/a	n/a	7,989
250	Taxes Other than FIT	n/a	n/a	n/a	n/a	112,029
260	Total Exp and Other Taxes	n/a	n/a	n/a	n/a	8,154,545
	FIT Adjustments					
270	Adjustment for FIT	357,609	0	0	357,609	155,880
280	Amortized ITC	0	0	0	0	0
290	Federal Income Taxes	n/a	n/a	n/a	n/a	0
300	Total Expenses & Taxes	n/a	n/a	n/a	n/a	7,998,665
	Telephone Plant in Service					
310	General Support	3,948,096	0	0	3,948,096	1,720,947
320	Central Office Equip-Switch	22,463,844	0	0	22,463,844	9,791,832
321	Operator Systems	0	0	0	0	0
322	Tandem Switching	0	0	0	0	0
323	Local Switching Cat. 3	0	0	0	0	0
324	Equal Access	22,463,844	0	0	22,463,844	9,791,832
330	Central Office Equip-Trans	0	0	0	0	0
331	Subscriber Lines	0	0	0	0	0
332	Exchange Circuit	0	0	0	0	0
333	Interexchange Circuit	0	0	0	0	0
334	Host Remote	0	0	0	0	0
340	Cable & Wire	0	0	0	0	0
341	Subscriber Lines	0	0	0	0	0
342	Exchange	0	0	0	0	0
343	Interexchange	0	0	0	0	0
344	Host Remote	0	0	0	0	0
350	Info Orig/Term Equipment	0	0	0	0	0
360	Amortizable Assets	920,853	0	0	920,853	401,393
370	Total Plant in Service	27,332,793	0	0	27,332,793	11,914,172
	Adjustments to TPIS					
380	Depr / Amor Reserve	15,271,452	0	0	15,271,452	6,656,718
390	Accum Deferred Income Tax	4,197,934	0	0	4,197,934	1,829,850
400	Other Rate Base Adjust.	n/a	n/a	n/a	n/a	337,873
	Return Data					
410	Average Rate Base	n/a	n/a	n/a	n/a	3,765,477
420	Return	n/a	n/a	n/a	n/a	n/a
430	Rate of Return	n/a	n/a	n/a	n/a	n/a

PUBLIC VERSION

COS-1(H)
Filing Date: 6/24/2004
Filing Entity: Iowa Network Access Divisi
Transmittal Number : 22
COSA: INIAAN03

		Billing & Collection (F)	Interstate Inter-exchange (G)	ROR Regulated I/S Access (H)	Pay Phone (I)	Inside Wire (J)	BFP (K)	Total Common Line (L)
	Revenues							
100	Network Access	n/a	n/a	8,686,953	0	0	0	0
110	Uncollectibles	n/a	n/a	(406,788)	0	0	0	0
120	Common Line Support	n/a	n/a	0	0	0	0	0
130	Long Term	n/a	n/a	0	0	0	0	0
140	Transitional	n/a	n/a	0	0	0	0	0
150	Miscellaneous	n/a	n/a	34,213	0	0	0	0
160	Net Revenues	n/a	n/a	8,314,378	0	0	0	0
	Expenses							
170	Plant Specific	0	0	5,914,794	0	0	0	0
171	Network Support	0	0	0	0	0	0	0
172	General Support	0	0	354,002	0	0	0	0
173	Central Office	0	0	372,741	0	0	0	0
174	Operator Systems	0	0	0	0	0	0	0
175	COE Switching	0	0	372,741	0	0	0	0
176	COE Transmission	0	0	0	0	0	0	0
177	IOT	0	0	0	0	0	0	0
178	Cable & Wire Facilities	0	0	5,188,051	0	0	0	0
180	Plant Non-Sp. Less Dep/Amor	0	0	318,900	0	0	0	0
190	Depreciation / Amortizsation	0	0	1,040,129	0	0	0	0
200	Customer Operations	0	0	76,355	0	0	0	0
201	Marketing	0	0	0	0	0	0	0
202	Local Business Office	0	0	39,011	0	0	0	0
203	Revenue Accounting	0	0	37,344	0	0	0	0
204	Other Billing & Collection	0	0	0	0	0	0	0
210	Access	n/a	0	n/a	n/a	n/a	n/a	n/a
220	Corporate Operations	0	0	684,349	0	0	0	0
230	AFUDC	n/a	n/a	0	0	0	0	0
240	Other Exp. & Adjustments	0	0	7,989	0	0	0	0
250	Taxes Other than FIT	0	0	112,029	0	0	0	0
260	Total Exp and Other Taxes	0	0	8,154,545	0	0	0	0
	FIT Adjustments							
270	Adjustment for FIT	0	0	155,880	0	0	0	0
280	Amortized ITC	0	0	0	0	0	0	0
290	Federal Income Taxes	n/a	n/a	1,344	0	0	0	0
300	Total Expenses & Taxes	n/a	n/a	8,000,009	0	0	0	0
	Telephone Plant in Service							
310	General Support	0	0	1,720,947	0	0	0	0
320	Central Office Equip-Switch	0	0	9,791,832	0	0	0	0
321	Operator Systems	0	0	0	0	0	0	0
322	Tandem Switching	0	0	0	0	0	0	0
323	Local Switching Cat. 3	0	0	0	0	0	0	0
324	Equal Access	0	0	9,791,832	0	0	0	0
330	Central Office Equip-Trans	0	0	0	0	0	0	0
331	Subscriber Lines	0	0	0	0	0	0	0
332	Exchange Circuit	0	0	0	0	0	0	0
333	Interexchange Circuit	0	0	0	0	0	0	0
334	Host Remote	0	0	0	0	0	0	0
340	Cable & Wire	0	0	0	0	0	0	0
341	Subscriber Lines	0	0	0	0	0	0	0
342	Exchange	0	0	0	0	0	0	0
343	Interexchange	0	0	0	0	0	0	0
344	Host Remote	0	0	0	0	0	0	0
350	Info Orig/Term Equipment	0	0	0	0	0	0	0
360	Amortizable Assets	0	0	401,393	0	0	0	0
370	Total Plant In Service	0	0	11,914,172	0	0	0	0
	Adjustments to TPIS							
380	Depr / Amor Reserve	0	0	6,656,718	0	0	0	0
390	Accum Deferred Income Tax	0	0	1,829,850	0	0	0	0
400	Other Rate Base Adjust.	0	0	337,873	0	0	0	0
	Return Data							
410	Average Rate Base	n/a	n/a	3,765,477	0	0	0	0
420	Return	n/a	n/a	158,489	0	0	0	0
430	Rate of Return	n/a	0.00%	4.21%	0.00%	0.00%	0.00%	0.00%

PUBLIC VERSION

PUBLIC VERSION

		Local Switching (M)	Equal Access (N)	SS7 (O)	Information (P)	Tandem Switching (Q)	Local Transport (R)
	Revenues						
100	Network Access	0	0	0	0	0	8,686,953
110	Uncollectibles	0	0	0	0	0	(406,788)
120	Common Line Support	0	n/a	n/a	n/a	n/a	n/a
130	Long Term	0	n/a	n/a	n/a	n/a	n/a
140	Transitional	0	n/a	n/a	n/a	n/a	n/a
150	Miscellaneous	0	0	0	0	0	34,213
160	Net Revenues	0	0	0	0	0	8,314,378
		---	---	---	---	---	---
	Expenses	---	---	---	---	---	---
170	Plant Specific	0	0	0	0	0	5,914,794
171	Network Support	0	0	0	0	0	0
172	General Support	0	0	0	0	0	354,002
173	Central Office	0	0	0	0	0	372,741
174	Operator Systems	0	0	0	0	0	0
175	COE Switching	0	0	0	0	0	372,741
176	COE Transmission	0	0	0	0	0	0
177	IOT	0	0	0	0	0	0
178	Cable & Wire Facilities	0	0	0	0	0	5,188,051
180	Plant Non-Sp. Less Dep/Amor	0	0	0	0	0	318,900
190	Depreciation / Amortization	0	0	0	0	0	1,040,129
200	Customer Operations	0	0	0	0	0	76,355
201	Marketing	0	0	0	0	0	0
202	Local Business Office	0	0	0	0	0	39,011
203	Revenue Accounting	0	0	0	0	0	37,344
204	Other Billing & Collection	0	0	0	0	0	0
210	Access	n/a	n/a	n/a	n/a	n/a	n/a
220	Corporate Operations	0	0	0	0	0	684,349
230	AFUDC	0	0	0	0	0	0
240	Other Exp. & Adjustments	0	0	0	0	0	7,989
250	Taxes Other than FIT	0	0	0	0	0	112,029
260	Total Exp and Other Taxes	0	0	0	0	0	8,154,545
		---	---	---	---	---	---
	FIT Adjustments	---	---	---	---	---	---
270	Adjustment for FIT	0	0	0	0	0	155,880
280	Amortized ITC	0	0	0	0	0	0
290	Federal Income Taxes	0	0	0	0	0	1,344
		---	---	---	---	---	---
300	Total Expenses & Taxes	0	0	0	0	0	8,000,009
		---	---	---	---	---	---
	Telephone Plant in Service	---	---	---	---	---	---
310	General Support	0	0	0	0	0	1,720,947
320	Central Office Equip-Switch	0	0	0	0	0	9,791,832
321	Operator Systems	0	0	0	0	0	0
322	Tandem Switching	0	0	0	0	0	0
323	Local Switching Cat. 3	0	0	0	0	0	0
324	Equal Access	0	0	0	0	0	9,791,832
330	Central Office Equip-Trans	0	0	0	0	0	0
331	Subscriber Lines	0	0	0	0	0	0
332	Exchange Circuit	0	0	0	0	0	0
333	Interexchange Circuit	0	0	0	0	0	0
334	Host Remote	0	0	0	0	0	0
340	Cable & Wire	0	0	0	0	0	0
341	Subscriber Lines	0	0	0	0	0	0
342	Exchange	0	0	0	0	0	0
343	Interexchange	0	0	0	0	0	0
344	Host Remote	0	0	0	0	0	0
350	Info Orig/Term Equipment	0	0	0	0	0	0
360	Amortizable Assets	0	0	0	0	0	401,393
370	Total Plant in Service	0	0	0	0	0	11,914,172
		---	---	---	---	---	---
	Adjustments to TPIS	---	---	---	---	---	---
380	Depr / Amor Reserve	0	0	0	0	0	6,656,718
390	Accum Deferred Income Tax	0	0	0	0	0	1,829,850
400	Other Rate Base Adjust.	0	0	0	0	0	337,873
		---	---	---	---	---	---
	Return Data	---	---	---	---	---	---
410	Average Rate Base	0	0	0	0	0	3,765,477
420	Return	0	0	0	0	0	158,489
430	Rate of Return	0.00%	0.00%	0.00%	0.00%	0.00%	4.21%

COS-1(H)
Filing Date: 6/24/2004
Filing Entity: Iowa Network Access Divisi
Transmittal Number : 22
COSA: INIAAN03

		Host Remote (S)	Total Switched Traffic Sensitive (T)	Special Access (U)
	Revenues			
100	Network Access	0	8,686,953	0
110	Uncollectibles	0	(406,788)	0
120	Common Line Support	n/a	n/a	n/a
130	Long Term	n/a	n/a	n/a
140	Transitional	n/a	n/a	n/a
150	Miscellaneous	0	34,213	0
160	Net Revenues	0	8,314,378	0
	Expenses			
170	Plant Specific	0	5,914,794	0
171	Network Support	0	0	0
172	General Support	0	354,002	0
173	Central Office	0	372,741	0
174	Operator Systems	0	0	0
175	COE Switching	0	372,741	0
176	COE Transmission	0	0	0
177	IOT	0	0	0
178	Cable & Wire Facilities	0	5,188,051	0
180	Plant Non-Sp. Less Dep/Amor	0	318,900	0
190	Depreciation / Amortization	0	1,040,129	0
200	Customer Operations	0	76,355	0
201	Marketing	0	0	0
202	Local Business Office	0	39,011	0
203	Revenue Accounting	0	37,344	0
204	Other Billing & Collection	0	0	0
210	Access	n/a	n/a	n/a
220	Corporate Operations	0	684,349	0
230	AFUDC	0	0	0
240	Other Exp. & Adjustments	0	7,989	0
250	Taxes Other than FIT	0	112,029	0
260	Total Exp and Other Taxes	0	8,154,545	0
	FIT Adjustments			
270	Adjustment for FIT	0	155,880	0
280	Amortized ITC	0	0	0
290	Federal Income Taxes	0	1,344	0
300	Total Expenses & Taxes	0	8,000,009	0
	Telephone Plant in Service			
310	General Support	0	1,720,947	0
320	Central Office Equip-Switch	0	9,791,832	0
321	Operator Systems	0	0	0
322	Tandem Switching	0	0	0
323	Local Switching Cat. 3	0	0	0
324	Equal Access	0	9,791,832	0
330	Central Office Equip-Trans	0	0	0
331	Subscriber Lines	0	0	0
332	Exchange Circuit	0	0	0
333	Interexchange Circuit	0	0	0
334	Host Remote	0	0	0
340	Cable & Wire	0	0	0
341	Subscriber Lines	0	0	0
342	Exchange	0	0	0
343	Interexchange	0	0	0
344	Host Remote	0	0	0
350	Info Orig/Term Equipment	0	0	0
360	Amortizable Assets	0	401,393	0
370	Total Plant In Service	0	11,914,172	0
	Adjustments to TPIS			
380	Depr / Amor Reserve	0	6,656,718	0
390	Accum Deferred Income Tax	0	1,829,850	0
400	Other Rate Base Adjust.	0	337,873	0
	Return Data			
410	Average Rate Base	0	3,765,477	0
420	Return	0	158,489	0
430	Rate of Return	0.00%	4.21%	0.00%

PUBLIC VERSION

COS-2
Filing Date: 6/24/2004
Filing Entity: Iowa Network Access Division
Transmittal Number: 22
COSA: INIAAN03
Page 9 of 31

Rate-of-Return TRP
7/04 - 6/05
Versus 2003 Actual

		Common Line (A)	Traffic Sensitive Switched (B)	Traffic Sensitive Special (C)	Other Interstate (D)	Total Interstate (E)	Total Co. Subject to Separations (F)
Forecast, 7/04 - 6/05							
	Revenue Requirement						
100	Depreciation/Amortization	0	1,055,307	0	0	1,055,307	2,506,669
105	Expense Less Dep & Amor	0	7,439,750	0	0	8,495,057	n/a
110	Taxes Less FIT	0	72,503	0	0	n/a	n/a
115	Return	0	376,711	0	n/a	n/a	n/a
120	FIT	0	26,412	0	n/a	n/a	n/a
125	Uncol., IDC & Other Adj.	0	0	0	n/a	n/a	n/a
130	Revenue Requirement	0	8,970,683	0	n/a	n/a	n/a
135	Access Service Revenue	0	8,970,683	0	n/a	n/a	n/a
		---	---	---	---	---	---
	Rate Base	---	---	---	---	---	---
140	Telephone Plant in Service	0	12,030,068	0	0	12,030,068	28,574,982
145	Rate Base Adjustments	0	365,700	0	0	365,700	n/a
150	Depreciation Reserves	0	7,285,675	0	0	7,285,675	17,305,641
155	Accum Deferred Income Tax	0	1,761,553	0	0	1,761,553	4,184,212
160	Average Rate Base	0	3,348,540	0	0	3,348,540	n/a
Actual, 1/03- 12/03							
	Revenue Requirement						
200	Depreciation/Amortization	0	1,040,129	0	0	1,040,129	2,386,202
205	Expense Less Dep & Amor	0	7,002,387	0	0	7,002,387	n/a
210	Taxes Less FIT	0	112,029	0	0	n/a	n/a
215	Return	0	158,489	0	n/a	n/a	n/a
220	FIT	0	1,344	0	n/a	n/a	n/a
225	Uncol., IDC & Other Adj.	0	0	0	n/a	n/a	n/a
230	Revenue Requirement	0	8,314,378	0	n/a	n/a	n/a
235	Access Service Revenue	0	8,314,378	0	n/a	n/a	n/a
		---	---	---	---	---	---
	Rate Base	---	---	---	---	---	---
240	Telephone Plant in Service	0	11,914,172	0	0	11,914,172	27,332,793
245	Rate Base Adjustments	0	337,873	0	0	337,873	n/a
250	Depreciation Reserves	0	6,656,718	0	0	6,656,718	15,271,452
255	Accum Deferred Income Tax	0	1,829,850	0	0	1,829,850	4,197,934
260	Average Rate Base	0	3,765,477	0	0	3,765,477	n/a

PUBLIC VERSION

COS-2
Filing Date: 6/24/2004
Filing Entity: Iowa Network Access Division
Transmittal Number: 22
COSA: INIAAN03

Rate-of-Return TRP
7/04 - 6/05
Versus 2003 Actual

		Common Line (A)	Traffic Sensitive Switched (B)	Traffic Sensitive Special (C)	Other Interstate (D)	Total Interstate (E)	Total Co. Subject to Separations (F)
Forecast, 7/03 - 6/04							
	Revenue Requirement						
100	Depreciation/Amortization	0	1,180,781	0	0	1,180,781	2,538,747
105	Expense Less Dep & Amor	0	6,943,150	0	0	6,943,150	n/a
110	Taxes Less FIT	0	124,767	0	0	n/a	n/a
115	Return	0	494,847	0	0	n/a	n/a
120	FIT	0	176,340	0	0	n/a	n/a
125	Uncol., IDC & Other Adj.	0	0	0	0	n/a	n/a
130	Revenue Requirement	0	8,919,885	0	0	n/a	n/a
135	Access Service Revenue	0	8,919,885	0	0	n/a	n/a
		---	---	---	---	---	---
	Rate Base	---	---	---	---	---	---
140	Telephone Plant in Service	0	11,925,920	0	0	11,925,920	25,641,405
145	Rate Base Adjustments	0	362,533	0	0	362,533	n/a
150	Depreciation Reserves	0	6,798,044	0	0	6,798,044	14,616,181
155	Accum Deferred Income Tax	0	964,526	0	0	964,526	2,073,786
160	Average Rate Base	0	4,525,883	0	0	4,525,883	n/a
Actual, 1/02 - 12/02							
	Revenue Requirement						
200	Depreciation/Amortization	0	935,577	0	0	935,577	2,120,523
205	Expense Less Dep & Amor	0	6,377,747	0	0	6,377,747	n/a
210	Taxes Less FIT	0	132,582	0	0	132,582	n/a
215	Return	0	(76,523)	0	0	(76,523)	n/a
220	FIT	0	0	0	0	0	n/a
225	Uncol., IDC & Other Adj.	0	0	0	0	0	n/a
230	Revenue Requirement	0	7,369,383	0	0	7,369,383	n/a
235	Access Service Revenue	0	7,369,383	0	0	n/a	n/a
		---	---	---	---	---	---
	Rate Base	---	---	---	---	---	---
240	Telephone Plant in Service	0	11,102,212	0	0	11,102,212	25,163,614
245	Rate Base Adjustments	0	317,433	0	0	317,433	n/a
250	Depreciation Reserves	0	5,303,941	0	0	5,303,941	12,021,597
255	Accum Deferred Income Tax	0	899,972	0	0	899,972	2,039,824
260	Average Rate Base	0	5,215,732	0	0	5,215,732	n/a

PUBLIC VERSION

COS-2
Filing Date: 6/24/2004
Filing Entity: Iowa Network Access Division
Transmittal Number: 22
COSA: INIAAN03
Page 11 of 31

Rate-of-Return TRP
7/04 - 6/05
Versus 2003 Actual

		Common Line (A)	Traffic Sensitive Switched (B)	Traffic Sensitive Special (C)	Other Interstate (D)	Total Interstate (E)	Total Co. Subject to Separations (F)
Forecast, 7/02 - 6/03							
	Revenue Requirement						
100	Depreciation/Amortization	0	1,071,472	0	0	0	2,347,923
105	Expense Less Dep & Amor	0	6,152,131	0	0	0	n/a
110	Taxes Less FIT	0	141,675	0	0	n/a	n/a
115	Return	0	492,233	0	0	n/a	n/a
120	FIT	0	122,045	0	0	n/a	n/a
125	Uncol., IDC & Other Adj.	0	0	0	0	n/a	n/a
130	Revenue Requirement	0	7,979,556	0	0	n/a	n/a
135	Access Service Revenue	0	7,979,556	0	0	n/a	n/a
		---	---	---	---	---	---
	Rate Base	---	---	---	---	---	---
140	Telephone Plant in Service	0	12,968,141	0	0	12,968,141	28,819,118
145	Rate Base Adjustments	0	324,654	0	0	324,654	n/a
150	Depreciation Reserves	0	6,217,468	0	0	6,217,468	13,817,089
155	Accum Deferred Income Tax	0	989,672	0	0	989,672	2,199,347
160	Average Rate Base	0	6,085,655	0	0	6,085,655	n/a
		---	---	---	---	---	---
		---	---	---	---	---	---
		---	---	---	---	---	---
Actual, 1/01 - 12/01		---	---	---	---	---	---
	Revenue Requirement	---	---	---	---	---	---
200	Depreciation/Amortization	0	928,569	0	0	928,569	1,931,796
205	Expense Less Dep & Amor	0	6,241,897	0	0	6,241,897	n/a
210	Taxes Less FIT	0	158,560	0	0	158,560	n/a
215	Return	0	528,277	0	0	528,277	n/a
220	FIT	0	122,464	0	0	122,464	n/a
225	Uncol., IDC & Other Adj.	0	0	0	0	0	n/a
230	Revenue Requirement	0	7,979,767	0	0	7,979,767	n/a
235	Access Service Revenue	0	7,979,767	0	n/a	n/a	n/a
		---	---	---	---	---	---
	Rate Base	---	---	---	---	---	---
240	Telephone Plant in Service	0	13,231,902	0	0	13,231,902	28,360,802
245	Rate Base Adjustments	0	330,718	0	0	330,718	n/a
250	Depreciation Reserves	0	5,457,101	0	0	5,457,101	11,696,561
255	Accum Deferred Income Tax	0	1,067,857	0	0	1,067,857	2,288,806
260	Average Rate Base	0	7,037,662	0	0	7,037,662	n/a

PUBLIC VERSION

PUBLIC VERSION

MAG-1
Filing Date: 6/24/2004
Filing Entity: Iowa Network Access Division
Transmittal Number : 22
COSA: INIAAN03

Rate-of Return TRP
MAG Adjustments
Test Year, 7/04 - 7/05

Access Element	Interstate Revenue Requirement Prior to Adjustments (A) Note 1	Local Switching Support (B) Note 2	Sub-Total (C) Cols. A-B	Line Port Transfer (D) Note 3	Universal Service Fund Contribution (E) Note 4	Frozen TIC Revenue (F) Note 5	Interstate Revenue Requirement Subject to TIC Re allocation (G) Cols. C+D+E+F	Frozen TIC Re-allocation (G) Note 6	Interstate Revenue Requirement Subject to Rate Making
Carrier Common Line	$0		$0	$0	$0		$0	$0	$0
Local Switching	$0	$0	$0	$0			$0	$0	$0
Information	$0		$0				$0	$0	$0
Transport	$9,033,947		$9,033,947			$0	$9,033,947	$0	$9,033,947
Special Access	$0		$0				$0	$0	$0
Total	**$9,033,947**	**$0**	**$9,033,947**	**$0**	**$0**	**$0**	**$9,033,947**	**$0**	**$9,033,947**

Note 1: Source of Revenue Requirements Column (A)
Carrier Common Line **TRP COS-1(P) Line 100, Column L**
Local Switching **TRP COS-1(P) Line 100, Column M**
Information **TRP COS-1(P) Line 100, Column P**
Transport **TRP COS-1(P) Line 100, Column Q,R,S**
Special Access **TRP COS-1(P) Line 100, Column U**

Factor Used for Line Port Adjustment: 0.0000%

Note 2: Calculated using USAC Algorithm for Test Period
Note 3: Column C, Local Switching * Port Adjustment Factor
Note 4: Projected Amount per Account 6540
Note 5: From TRP Form MAG-2
Note 6: Distributed on Column G Totals

MAG-2		**Rate-of Return TRP**
Filing Date:	**6/24/2004**	**TIC Revenues**
Filing Entity:	**Iowa Network Access Division**	**Test Year, 7/04 - 7/05**
Transmittal Number :	**22**	
COSA:	**INIAAN03**	

DEVELOPMENT FROZEN TIC REVENUE JULY 00 TO JUNE 01

Month	Transport Interconnection Charge Minutes Billed	Rate in Effect	Calculated Revenues
Jul-00	0	0.000000	$0
Aug-00	0	0.000000	$0
Sep-00	0	0.000000	$0
Oct-00	0	0.000000	$0
Nov-00	0	0.000000	$0
Dec-00	0	0.000000	$0
Jan-01	0	0.000000	$0
Feb-01	0	0.000000	$0
Mar-01	0	0.000000	$0
Apr-01	0	0.000000	$0
May-01	0	0.000000	$0
Jun-01	0	0.000000	$0

Total Frozen TIC Revenues **$0**
(Development based on FCC Order 01-304, Paragraph 103)

Or - Override (No Greater than Above): **$0**
(Actual TIC Revenue Used in December 17, 2001 Filing should be listed here)

Override = Actual TIC Revenues from Last Filing
(Development based on FCC Order 01-304, Paragraph 103)

Actual TIC Revenue Requirement from Filing Prior to MAG Filing in December 20(**$0**

PUBLIC VERSION

PUBLIC VERSION

REV-1
Filing Date: 6/24/2004
Filing Entity: Iowa Network Access Division
Transmittal Number: 22
COSA: INIAAN03

Rate-of-Return TRP
Switched Access Revenue
Test Year, 7/04 - 7/05

	Common Line	Minute or Message Rate (A)	Minute Miles Rate (B)	Line or Trunk Rate (C)	Minute or Message Demand (D)	Minute Miles Demand (E)	Line or Trunk Demand (F)	Access Revenue (G)	Revenue Requirement (H)
100	Multi-line Business EUCL	n/a	n/a	0.00	n/a	n/a	0	0	n/a
110	Single Line Business EUCL	n/a	n/a	0.00	n/a	n/a	0	0	n/a
120	Residential EUCL	n/a	n/a	0.00	n/a	n/a	0	0	n/a
130	Special Access Surcharge	n/a	n/a	0.00	n/a	n/a	12	0	n/a
140	Terminating CCL Premium	0.000000	n/a	n/a	0	n/a	n/a	0	n/a
150	Terminating CCL Non-Prem.	0.000000	n/a	n/a	0	n/a	n/a	0	n/a
160	Originating CCL Premium	0.000000	n/a	n/a	0	n/a	n/a	0	n/a
170	Originating CCL Non-Prem.	0.000000	n/a	n/a	0	n/a	n/a	0	n/a
180	Common Line - - Total	n/a	n/a	n/a	n/a	n/a	n/a	0	0
	Information	----	----	----	----	----	----	----	----
190	Directory Assistance	0.000000	n/a	n/a	0	n/a	n/a	0	n/a
200	White Page Surcharge Prem.	0.000000	n/a	n/a	0	n/a	n/a	0	n/a
210	White Pg. Surcharge Non-Prem.	0.000000	n/a	n/a	0	n/a	n/a	0	n/a
220	Other Information	n/a	n/a	n/a	n/a	n/a	n/a	n/a	n/a
230	Information - - Total	n/a	n/a	n/a	n/a	n/a	n/a	n/a	0
	Local Switching	----	----	----	----	----	----	----	----
240	Premium	0.000000	n/a	n/a	0	n/a	n/a	0	n/a
250	Non-Premium	0.000000	n/a	n/a	0	n/a	n/a	0	n/a
260	Equal Access	n/a	n/a	n/a	n/a	n/a	n/a	n/a	n/a
270	Switching - - Total	n/a	n/a	n/a	n/a	n/a	n/a	n/a	0
	Local Transport	----	----	----	----	----	----	----	----
280	Premium LT Term.	0.010310	n/a	n/a	876,231,538	n/a	n/a	9,033,947	n/a
290	Non-Prem. LT Term	0.000000	n/a	n/a	0	n/a	n/a	0	n/a
300	Premium LT Facility	n/a	0.000000	n/a	n/a	0	n/a	0	n/a
310	Non-Prem. LT Facility	n/a	0.000000	n/a	n/a	0	n/a	0	n/a
320	Tandem Switching	0.000000	n/a	n/a	0	n/a	n/a	0	n/a
330	TST Termination	0.000000	n/a	n/a	0	n/a	n/a	0	n/a
340	TST Facility	n/a	0.000000	n/a	n/a	0	n/a	0	n/a
350	Premium Interconnection	0.000000	n/a	n/a	0	n/a	n/a	0	n/a
360	Non-Prem. Interconnection	0.000000	n/a	n/a	0	n/a	n/a	0	n/a
370	Installation NRC per Trunk	n/a	n/a	0.00	n/a	n/a	0	0	n/a

Rate-of-Return TRP
Switched Access Revenue
Test Year, 7/04 - 7/05

	Local Transport (Cont.)	Termination Rate (A)	Circuit Rate (B)	Mileage Rate (C)	Termination Demand (D)	Circuit Demand (E)	Mileage Demand (F)	Access Revenue (G)	Revenue Requirement (H)
380	DS3 Entrance Facility	n/a	0	n/a	n/a	0	n/a	0	n/a
390	DS3 Direct Term.	0.00	n/a	n/a	0	n/a	n/a	0	n/a
400	DS3 Direct Facility	n/a	n/a	0.00	n/a	n/a	0	0	n/a
410	DS1 Entrance Facility	n/a	0	n/a	n/a	0	n/a	0	n/a
420	DS1 Direct Term.	0	n/a	n/a	0	n/a	n/a	0	n/a
430	DS1 Direct Facility	n/a	n/a	0.00	n/a	n/a	0	0	n/a
440	VG Entrance Facility	n/a	0.00	n/a	n/a	0	n/a	0	n/a
450	VG Direct Term.	0.00	n/a	n/a	0	n/a	n/a	0	n/a
460	VG Direct Facility	n/a	n/a	0.00	n/a	n/a	0	0	n/a
470	Other Transport	n/a	n/a	n/a	n/a	n/a	n/a	31,966	n/a
480	Local Transport - - Total	n/a	n/a	n/a	n/a	n/a	n/a	9,065,913	9,065,913
	Special - - Voice Grade	----	----	----	----	----	----	----	----
490	2-Wire Chan. Term.	n/a	0	n/a	n/a	0	n/a	0	n/a
500	4-Wire Chan. Term.	n/a	0	n/a	n/a	0	n/a	0	n/a
510	Channel Mileage Term.	0	n/a	n/a	0	n/a	n/a	0	n/a
520	Channel Mileage Facility	n/a	n/a	0.00	n/a	n/a	0	0	n/a
530	Non-Recurring	n/a	0	n/a	n/a	0	n/a	0	n/a
	Special - - High Capacity	----	----	----	----	----	----	----	----
540	High Capacity Chan. Term.	n/a	0	n/a	n/a	0	n/a	0	n/a
550	Channel Mileage Term.	0	n/a	n/a	0	n/a	n/a	0	n/a
560	Channel Mileage Facility	n/a	n/a	0.00	n/a	n/a	0	0	n/a
570	Non-Recurring	n/a	0	n/a	n/a	0	n/a	0	n/a
580	Special Access - - Total	n/a	n/a	n/a	n/a	n/a	n/a	0	0

Notes: A composite special access NRC should be used if the installation rates vary among the services. If the company does not file a particular rate, then the rate and demand = 0. Col. G equals Cols. (A x D) + (B x E) + (C x F).

PUBLIC VERSION

Rate-of-Return TRP
Revenues Summary
Test Year, 7/04 - 7/05

	Total Network Access (A)	Recurring without ICB (B)	Non-Recurring without ICB (C)	ICB (D)
100 Carrier Common Line	0	0	0	0
110 Special Access	0	0	0	0
120 Local Switching	0	0	0	0
130 Equal Access	0	0	0	0
140 Information	0	0	0	0
150 Local Transport	9,065,913	9,033,947	31,966	0
160 Total TS - Switched	9,065,913	9,033,947	31,966	0

Notes : Col. A = Cols. B + C + D. If a particular category is inapplicable, then that category equals O.

PUBLIC VERSION

PUBLIC VERSION

RTE-1
Filing Date: 6/24/2004
Filing Entity: Iowa Network Access Division
Transmittal Number: 22
COSA: INIAAN03

Rate-of-Return TRP
Percent Change in
Historical Rate Levels

	7/1/2003 Rate (A)	Current Effective Rate (B)	Proposed 7/1/2004 Rate (C)	% Change 7/1/2003 7/1/2004 (D)	% Change Current 7/1/2004 (E)
Switched Access					
100 Premium CCL Term. ($/MOU)	0.00000000	0.00000000	0.00000000	0.00%	0.00%
	---	---	---	---	---
110 N.P. CCL Term. ($/MOU)	0.00000000	0.00000000	0.00000000	0.00%	0.00%
	---	---	---	---	---
120 Premium Switching ($/MOU)	0.00000000	0.00000000	0.00000000	0.00%	0.00%
	---	---	---	---	---
130 N.P. Switching ($/MOU)	0.00000000	0.00000000	0.00000000	0.00%	0.00%
	---	---	---	---	---
140 Equal Access	0.00000000	0.00000000	0.00000000	0.00%	0.00%
	---	---	---	---	---
End User Common Line	---	---	---	---	---
150 Multi-line Business ($/Month)	0	0.00	0.00	0.00%	0.00%
	---	---	---	---	---
160 Residential & Single Line Bus.	0	0.00	0.00	0.00%	0.00%

PUBLIC VERSION

RTE-1
Filing Date: 6/24/2004
Filing Entity: Iowa Network Access Division
Transmittal Number: 22
COSA: INIAAN03

Rate-of-Return TRP
Percent Change in
Historical Rate Levels

Local Transport Rates	7/1/2003 Rate (A)	Current Effective Rate (B)	Proposed 7/1/2004 Rate (C)	% Change 7/1/2003 7/1/2004 (D)	% Change Current 7/1/2004 (E)
170 Prem. LT ($/MOU, Avg. Mileage)	0.01045000	0.01045000	0.01031000	-1.34%	-1.34%
	---	---	---	---	---
180 N.P. LT ($/MOU, Avg. Mileage)	0.00000000	0.00000000	0.00000000	0.00%	0.00%
	---	---	---	---	---
190 DS1 Entr. Facility ($/Circuit)	0	0.00	0.00	0.00%	0.00%
	---	---	---	---	---
200 DS1 Direct Trunk ($/Circuit)	0	0.00	0.00	0.00%	0.00%
	---	---	---	---	---
210 Tdm Sw. Transport (($/Circuit)	0	0.00	0.00	0.00%	0.00%
	---	---	---	---	---
220 Tdm. Switching ($/Tdm. MOU)	0.000000	0.000000	0.000000	0.00%	0.00%
	---	---	---	---	---
230 Prem. Interconnection ($/MOU)	0.000000	0.000000	0.000000	0.00%	0.00%
	---	---	---	---	---
240 N.P. Interconnection ($/MOU)	0.000000	0.000000	0.000000	0.00%	0.00%
	---	---	---	---	---
250 NRC ($/Tk. Or Tks. Activated)	0.00	0.00	0.00	0.00%	0.00%
	---	---	---	---	---
260 2-Wire VG ($/Cir., Avg. Mileage)	0.00	0.00	0.00	0.00%	0.00%
	---	---	---	---	---
270 4-Wire VG ($/Cir., Avg. Mileage)	0.00	0.00	0.00	0.00%	0.00%

Notes: If Lines 170 & 180 or any other entry is inapplicable, then that rate = 0.

PUBLIC VERSION

RTE-2
Filing Date: 6/24/2004
Filing Entity: Iowa Network Access Division
Transmittal Number: 22
COSA: INIAAN03

Rate-of-Return
Revenue Price-outs
Using 2001 Demand

Switched Access	Revenue at 7/1/2003 Rates (A)	Revenue at Current Rate (B)	Change in Revenue, Cols. B-A (C)	Revenue at 7/1/2004 Rates (D)	Change in Revenue, Cols. D-B (E)
100 Multi-line Business	0	0	0	0	0
110 Residential & Single Line Bus.	0	0	0	0	0
120 Carrier Common Line	0	0	0	0	0
130 Special Access	0	0	0	0	0
140 Local Switching	0	0	0	0	0
150 Equal Access	0	0	0	0	0
160 Information	0	0	0	0	0
170 Local Transport	7,940,634	7,940,634	0	7,834,252	(106,382)

Notes: If company belongs to the NECA common line pool, then revenue = 0.

PUBLIC VERSION

RTE-3
Filing Date: **6/24/2004**
Filing Entity: **Iowa Network Access Division**
Transmittal Number: **22**
COSA: **INIAAN03**
Page 20 of 31

Rate-of-Return TRP
COSA's for which Rates are Averaged or Pooled

COSA	Multi-line Business (A)	Residential & Single Line Business (B)	Carrier Common Line (C)
100			
110			
120			
130			
140			
150			
160			
170			
180			
190			
200			
210			
220			
230			

Notes: Companies should list all COSA's for which rates are averages or pooled.

RTE-3
Filing Date: 6/24/2004
Filing Entity: Iowa Netw
Transmittal Number: 22
COSA: INIAAN03

Rate-of-Return TRP
COSA's for Which Rates are Averaged or Pooled

COSA	Local Switching (D)	Local Transport (E)	Information (F)	Equal Access (G)	Special Access (H)
100					
110					
120					
130					
140					
150					
160					
170					
180					
190					
200					
210					
220					
230					

Notes: Companies should list all

PUBLIC VERSION

PUBLIC VERSION

DMD-1
Filing Date: 6/24/2004
Filing Entity: Iowa Network Access Division
Transmittal Number: 22
COSA: INIAAN03

Rate-of-Return TRP
Common Line
Minutes-of-Use

Historical	Premium Originating (A)	Premium Terminating (B)	Premium Total (C)	Non-Premium Originating (D)	Non-Premium Terminating (E)	Non-Premium Total (F)
100 1st Qtr. 2000	0	0	0	0	0	0
110 2nd Qtr. 2000	0	0	0	0	0	0
120 3rd Qtr. 2000	0	0	0	0	0	0
130 4th Qtr. 2000	0	0	0	0	0	0
140 1st Qtr. 2001	0	0	0	0	0	0
150 2nd Qtr. 2001	0	0	0	0	0	0
160 3rd Qtr. 2001	0	0	0	0	0	0
170 4th Qtr. 2001	0	0	0	0	0	0
180 1st Qtr. 2002	0	0	0	0	0	0
190 2nd Qtr. 2002	0	0	0	0	0	0
200 3rd Qtr. 2002	0	0	0	0	0	0
210 4th Qtr. 2002	0	0	0	0	0	0
	---	---	---	---	---	---
220 Pycos Year, 1/03 - 12/03	0	0	0	0	0	0
	---	---	---	---	---	---
230 Test Year, 7/04 - 6/05	0	0	0	0	0	0

PUBLIC VERSION

DMD-1
Filing Date: 6/24/2004
Filing Entity: Iowa Network Access Division
Transmittal Number: 22
COSA: INIAAN03

Rate-of-Return TRP
Common Line
Minutes-of-Use

	Historical	Total Originating (A)	Total Terminating (B)	Grand Total (C)	Chargeable Originating (D)	Chargeable Terminating (E)
100	1st Qtr. 2000	0	0	0	0	0
110	2nd Qtr. 2000	0	0	0	0	0
120	3rd Qtr. 2000	0	0	0	0	0
130	4th Qtr. 2000	0	0	0	0	0
140	1st Qtr. 2001	0	0	0	0	0
150	2nd Qtr. 2001	0	0	0	0	0
160	3rd Qtr. 2001	0	0	0	0	0
170	4th Qtr. 2001	0	0	0	0	0
180	1st Qtr. 2002	0	0	0	0	0
190	2nd Qtr. 2002	0	0	0	0	0
200	3rd Qtr. 2002	0	0	0	0	0
210	4th Qtr. 2002	0	0	0	0	0
		---	---	---	---	---
220	Pycos Year, 1/03 - 12/03	0	0	0	0	0
		---	---	---	---	---
230	Test Year, 7/04 - 6/05	0	0	0	0	0

PUBLIC VERSION

DMD-1
Filing Date: 6/24/2004
Filing Entity: Iowa Network Access Division
Transmittal Number: 22
COSA: INIAAN03
Page 2063 31

Rate-of-Return TRP
Traffic Sensitive
Minutes-of-Use

Historical	Premium Local Switching (A)	Non-Premium Local Switching (B)	Total Local Switching (C)	Total Chargeable Switching (D)	Total Tandem Switching* (E)	Tandem Switching Transport ** (F)
100 1st Qtr. 2000	0	0	0	0	0	157,181,944
110 2nd Qtr. 2000	0	0	0	0	0	159,433,176
120 3rd Qtr. 2000	0	0	0	0	0	159,821,302
130 4th Qtr. 2000	0	0	0	0	0	170,843,879
140 1st Qtr. 2001	0	0	0	0	0	176,804,912
150 2nd Qtr. 2001	0	0	0	0	0	185,323,764
160 3rd Qtr. 2001	0	0	0	0	0	197,077,459
170 4th Qtr. 2001	0	0	0	0	0	200,663,107
180 1st Qtr. 2002	0	0	0	0	0	185,805,128
190 2nd Qtr. 2002	0	0	0	0	0	193,323,540
200 3rd Qtr. 2002	0	0	0	0	0	193,395,658
210 4th Qtr. 2002	0	0	0	0	0	198,382,304
	---	---	---	---	---	---
220 Pycos Year, 1/03 - 12/03	0	0	0	0	0	831,287,417
	---	---	---	---	---	---
230 Test Year, 7/04 - 6/05	0	0	0	0	0	876,231,538

Notes: Local switching MOU are the same as the billable units for the interconnection charge.
* Refers to the MOU switched at a company tandem, as discussed in Part 69. 11(f-g).
** Refers to the MOU carried over non-dedicated trunks; i.e., tandem switched transport or common trunks.

Rate-of-Return TRP
Special Access
Demand

	1/03 - 12/03 Channel Terminations (A)	1/03 - 12/03 Number of Circuits (B)	1/03 - 12/03 Interoffice Miles (C)	7/04 - 6/05 Channel Terminations (D)	7/04 - 6/05 Number of Circuits (E)	7/04 - 6/05 Interoffice Miles (F)
100 Metallic	0	0	0	0	0	0
110 Telegraph	0	0	0	0	0	0
120 VG less WATS	0	0	0	0	0	0
130 WATS	0	0	0	0	0	0
140 full-time Audio	0	0	0	0	0	0
150 High Capacity	0	0	0	0	0	0

PUBLIC VERSION

Rate-of-Return TRP
Common Line
Revenue and Demand

	1/03 - 12/03 Historical Revenue (A)	1/03 - 12/03 Historical MOU or Lines (B)	7/04 - 6/05 Test Year Revenue (C)	7/04 - 6/05 Test Year MOU or Lines (D)
100 End User Common Line, Total	0	0	0	0
110 Residential	0	0	0	0
120 Single Line Business	0	0	0	0
130 Multi-line Business	0	0	0	0
140 Special Access Surcharge	0	0	0	0
150 Carrier Common Line	0	0	0	0
160 Total Common Line Revenue	0	n/a	0	n/a

PUBLIC VERSION

PUBLIC VERSION

DMD-4
Filing Date: 6/24/2004
Filing Entity: Iowa Network Access Division
Transmittal Number: 22
COSA: INIAAN03
Page 1 of 1

Rate-of-Return TRP
Minutes-of-Use
Historical vs. Forecast

		Common Line MOU (A)	Traffic Sensitive MOU (B)
100 Test Year	7/04 - 6/05	0	876,231,538
110 Pycos Year,	1/03 - 12/03	0	831,287,417
		----	----
120 Test Year	7/03 - 6/04	0	856,381,984
130 Pycos Year,	1/02 - 12/02	0	770,906,630
		----	----
140 Test Year	7/02 - 6/03	0	760,682,181
150 Pycos Year,	1/01 - 12/01	0	759,869,242
		----	----
160 Test Year	7/01 - 6/02	0	709,788,666
170 Pycos Year,	1/00 - 12/00	0	647,280,301

Notes: Actual operating statistics should be reported for the PYCOS years.
These data should be consistent with those in Chart DMD-4 in previous TRPs.
If a forecast was not reported for any particular test year, then enter 0.

DMD-5
Filing Date: 6/24/2004
Filing Entity: Iowa Network Access Division
Transmittal Number: 22
COSA: INIAAN03
Page 1 of 1

Rate-of-Return TRP
Minutes-of-Use
Direct Trunked Transport

	1/03 - 12/03 VG (A)	1/03 - 12/03 DSI (B)	1/03 - 12/03 DS3 (C)	Test Year 7/04 - 6/05 VG (D)	Test Year 7/04 - 6/05 DS1 (E)	Test Year 7/04 - 6/05 DS3 (F)
100 Entrance Facility	0.00	0.00	0.00	0.00	0.00	0.00
110 Direct Trunked Transport	0.00	0.00	0.00	0.00	0.00	0.00

Notes: Demand should be annualized and reflect application of the percent interstate usage factor (PIU).

PUBLIC VERSION

PUBLIC VERSION

ERN-1
Filing Date: 6/24/2004
Filing Entity: Iowa Network Access Division
Transmittal Number: 22
COSA: INIAAN03
Page 1 of 1

Rate-of-Return TRP
Rate-of-Return
Summary

	2001/2002 FCC Monitoring Period (A)	2003 Calendar Year (B)	7/04 - 6/05 Test Year (C)
100 Interstate Access, Total	3.69%	4.21%	11.25%
110 Carrier Common Line	0.00%	0.00%	0.00%
120 Special Access	0.00%	0.00%	0.00%
130 Local Switching	0.00%	0.00%	0.00%
140 Information	0.00%	0.00%	0.00%
150 Local Transport	3.69%	4.21%	11.25%
160 Traffic Sensitive Switched, Total	3.69%	4.21%	11.25%

PUBLIC VERSION

Filing Entity: Iowa Network Access Division
Filing Date: 6/24/2004
Transmittal Number: 22
COSA: INIAAN03
Page 1 of 1

Rate-of-Return TRP
Base Study Factor

		Actual 1998 (A)	Actual 1999 (B)	Actual 2000 (C)	Actual 2001 (D)	Actual 2002 (E)	Prospective 2004 (F)
	Relative MOU's - Tandem Switching						
100	Interstate	-	-	-	-	-	-
110	Total Company	-	-	-	-	-	-
120	IS Factor	0.0000%	0.0000%	0.0000%	0.0000%	0.0000%	0.0000%
	Host/Remote MOU's						
130	Interstate	-	-	-	-	-	-
140	Total Company	-	-	-	-	-	-
150	IS Factor	0.0000%	0.0000%	0.0000%	0.0000%	0.0000%	0.0000%
	Host/Remote MOU Miles						
160	Interstate	-	-	-	-	-	-
170	Total Company	-	-	-	-	-	-
180	IS Factor	0.0000%	0.0000%	0.0000%	0.0000%	0.0000%	0.0000%
	Conversation Minutes						
190	Interstate	536,750,284	589,038,932	647,280,301	759,869,242	770,906,630	856,381,984
200	Total Company	1,233,747,876	1,344,259,155	1,474,571,950	1,628,676,479	1,747,291,039	1,841,268,030
210	IS Factor	43.5057%	43.8189%	43.8961%	46.6556%	44.1201%	46.5104%
	Conversation Minute Miles						
220	Interstate	64,301,364	70,745,279	75,432,646	90,866,718	92,716,700	102,603,639
230	Total Company	145,493,503	159,861,553	171,432,414	194,949,374	208,238,047	218,546,467
240	IS Factor	44.1954%	44.2541%	44.0014%	46.6104%	44.5244%	46.9482%

The above Base Study Factors apportion on the following investment:

	Part 32 Account	Part 36 Category
Relative MOU's-Tandem Switching	2210	COE Cat. 3
Host/Remote MOU's	2230	COE Cat. 4.3
Host/Remote MOU Miles	2410	C&WF Cat. 4
Conversation Minutes	2230	COE Cat. 4.23
Conversation Minutes Miles	2410	C&WF Cat. 3

PUBLIC VERSION

RORDEM-1
Filing Date: 6/24/2004
Filing Entity: Iowa Network Access Division
Transmittal Number: 22
COSA: INIAAN03

Rate-of-Return TRP
Verification of WDEM

Year	Interstate DEM MOU (A)	Intrastate DEM MOU (B)	Local DEM MOU (C)	Total DEM MOU (D)	Interstate MDEM Factor (E)	No. of Switched Access Lines (F)	Part 36.125(e) Historical Weighting (G)	Interstate WDEM Factor (H)
1996	-	-	-	-	0.0000%	-	0	0.0000%
1997	-	-	-	-	0.0000%	-	0	0.0000%
1998	-	-	-	-	0.0000%	-	0	0.0000%
1999	-	-	-	-	0.0000%	-	0	0.0000%
2000	-	-	-	-	0.0000%	-	0	0.0000%
2001	-	-	-	-	0.0000%	-	0	0.0000%
2002	-	-	-	-	0.0000%	-	0	0.0000%

61.38 ACR-1 Historical
Filing Date: 6/24/2004
Filing Entity: IOWA NETWORK SERVICES, INC.
Transmittal Number : 22
COSA: INIAAN03

Rate-of Return TRP
ACR Adjustments
Historical (Calendar Year 2003)

Section 61.38 carriers should ANNUALIZE their revenue requirement figures for this worksheet.

Access Category	Interstate Revenue Requirement Prior to Adjustments	Local Switching Support	Sub-Total	Factor Used for Line Port Adjustment	Line Port Transfer	Universal Service Fund Contribution	JUL '00 - JUN '01 TIC Revenues	TIC Revenue Requirement for Historical Period	Interstate Revenue Requirement Used as Base for TIC Re-allocation	TIC Re-allocation	Interstate Revenue Requirement Subject to Rate Making
	Note 1	Note 2		Note 3	Note 4	Note 5	Note 6	Note 7			
Column	(A)	(B)	(C)	(D)	(E)	(F)	(G)	(H)	(I)	(J)	(K)
	Enter Data	Enter Data	Calculated Fields	Enter Data	Calculated Fields	Enter Data	Enter Data	Enter Data	Calculated Fields	Calculated Fields	Calculated Fields
Common Line	**$0**		$0		$0	**$0**			$0	$0	$0
Local Switching	**$0**	**$0**	$0		$0				$0	$0	$0
Information	**$0**		$0						$0	$0	$0
Transport	**$8,716,083**		$8,716,083	**0.00%**			**$0**	**$0**	$8,716,083	$0	$8,716,083
Special Access	**$0**		$0						$0	$0	$0
TOTAL (Calculated Fields)	**$8,716,083**		**$8,716,083**						**$8,716,083**	**$0**	**$8,716,083**

Note 1: Source: company workpapers - After reallocating General Support Facilities Investment, but before other part 69 adjustments as a result of the Rate-of-Return Access Charge Reform Order as reflected in this form. Express as ANNUAL amounts.
Note 2: USAC Allocation Amount
Note 3: Percentage factor based on carrier's cost study or 30%.
Note 4: Spreadsheet formula will calculate Local Switching Revenue Requirement multiplied by Line Port Adjustment Factor input.
Note 5: Based on USF Contributions placed into self identified sub-accounts of expense Account 6540
Note 6: "The amount to be reallocated is limited to the total revenues recovered through the interconnection charge assessed pursuant to section 69.124 for the 12-month period ending June 30, 2001." (C.F.R.§ 69.415(b)).
Note 7: TIC Revenue Requirement for historical period based on carrier's July, 2002 annual access tariff filing.

PUBLIC VERSION

61.38 ACR-1 Projected
Filing Date: 6/24/2004
Filing Entity: IOWA NETWORK SERVICES, INC.
Transmittal Number : 22
COSA: INIAAN03

Rate-of Return TRP
ACR Adjustments
Test Year, 7/04-6/05

Section 61.38 carriers should ANNUALIZE their revenue requirement figures for this worksheet.

Access Category	Interstate Revenue Requirement Prior to Adjustments	Local Switching Support	Sub-Total	Factor Used for Line Port Adjustment	Line Port Transfer	Universal Service Fund Contribution	JUL '00 - JUN '01 TIC Revenues	Test Year TIC Revenue Requirement	Interstate Revenue Requirement Used as Base for TIC Re-allocation	TIC Re-allocation	Interstate Revenue Requirement Subject to Rate Making
	Note 1	Note 2		Note 3	Note 4	Note 5	Note 6	Note 7			
Column	(A)	(B)	(C)	(D)	(E)	(F)	(G)	(H)	(I)	(J)	(K)
	Enter Data	Enter Data	Calculated Fields	Enter Data	Calculated Fields	Enter Data	Enter Data	Enter Data	Calculated Fields	Calculated Fields	Calculated Fields
Common Line	**$0**		$0		$0	**$0**			$0	$0	$0
Local Switching	**$0**	**$0**	$0		$0				$0	$0	$0
Information	**$0**		$0						$0	$0	$0
Transport	**$8,970,683**		$8,970,683	**0.00%**			**$0**	**$0**	$8,970,683	$0	$8,970,683
Special Access	**$0**		$0						$0	$0	$0
TOTAL (Calculated Fields)	**$8,970,683**		**$8,970,683**			**$0**			**$8,970,683**	**$0**	**$8,970,683**

Note 1: Source: company workpapers - After reallocating General Support Facilities Investment, but before other part 69 adjustments as a result of the Rate-of-Return Access Charge Reform Order as reflected in this form. Express as ANNUAL amounts.
Note 2: USAC Allocation Amount
Note 3: Percentage factor based on carrier's cost study or 30%.
Note 4: Spreadsheet formula will calculate Local Switching Revenue Requirement multiplied by Line Port Adjustment Factor input.
Note 5: Based on projected USF Contributions.
Note 6: "The amount to be reallocated is limited to the total revenues recovered through the interconnection charge assessed pursuant to section 69.124 for the 12-month period ending June 30, 2001." (C.F.R.§ 69.415(b)).
Note 7: TIC Revenue Requirement for test period.

PUBLIC VERSION

Exhibit 16

INS 2006 Tariff Filing
(filed June 26, 2006)

PUBLIC VERSION

McGuireWoods LLP
Washington Square
1050 Connecticut Ave N.W.
Suite 1200
Washington, DC 20036-5317
Phone: 202.857.1700
Fax: 202.857.1737
www.mcguirewoods.com

James U. Troup
Direct: 202.857.1702

McGUIREWOODS

jtroup@mcguirewoods.com

Filed Pursuant to
§ 204(a)(3) of the
Communications Act
on 7 Days' Notice

June 26, 2006

Marlene H. Dortch
Office of the Secretary
Federal Communications Commission
445 Twelfth Street, S.W.
Washington, D.C. 20554

Attention: Wireline Competition Bureau

Transmittal No. 25

FRN: 0002-5807-10
Iowa Network Services, Inc.

FRN: 0005-8579-17
McGuireWoods LLP

Dear Ms. Dortch:

The accompanying 2006 Annual Access Tariff Filing of Iowa Network Services, Inc. ("INS"), effective July 3, 2006, is sent to you for filing in compliance with the requirements of the Communications Act of 1934, as amended. This tariff filing consists of the following Check Sheets:

Tariff F.C.C. No.	Check Sheet Revision No.
1	21st Revised Page 1
	7th Revised Page 1.1

This 2006 Annual Access Tariff Filing consists of the cost support material required by *In the Matter of July 2006 Annual Access Charge Tariff Filings,* Order, 21 FCC Rcd 3020 (2006) (the "*Tariff Order*"). Pursuant to the attached study for the test period ending June 30, 2007, INS is reducing its switched transport rate.

As required by the *Tariff Order*, INS is submitting its 2006 Annual Tariff Review Plan and associated tariff changes electronically, using the Commission's Electronic Tariff Filing System ("ETFS"). The statutory processing fee in the amount of $720.00 is being hand-delivered today to the Federal Communications Commission (Tariff Filings, P.O. Box 358150, Pittsburgh, Pennsylvania 15251-5150) along with the original transmittal letter and FCC Form 159.

In addition to filing this letter with the ETFS, INS is sending separate courtesy copies of the TRP to Raj Kannan, Tamara Preiss and the Commission's duplication contractor, Best Copy and Printing, Inc.

Acknowledgement and date of receipt of this filing is requested. A duplicate copy of this letter is provided for this purpose.

Should you have any questions concerning this matter, please contact James U. Troup at 202-857-1700.

Sincerely,

/s/

James U. Troup

Counsel for
Iowa Network Services, Inc.

Attachments

cc: Raj Kannan, FCC Pricing Policy Division
FCC Reference Information Center
Best Copy and Printing, Inc.

PUBLIC VERSION

IOWA NETWORK SERVICES, INC.

IOWA NETWORK ACCESS DIVISION

DESCRIPTION AND JUSTIFICATION

COST SUPPORT MATERIAL

TARIFF REVIEW PLAN

JULY 3, 2006 ANNUAL ACCESS CHARGE TARIFF FILING

JUNE 26, 2006

IOWA NETWORK ACCESS DIVISION

INTERSTATE ACCESS TARIFF FILING

PROSPECTIVE PERIOD
JULY 3, 2006 - JUNE 30, 2007

INDEX

Section	Description
	Transmittal Letter
1	Introduction, Overview and Rate Development
2	Development of Switched Transport Charge and Study Period Projected Access Minutes
3	Projected Revenue Requirement Summary - Total Interstate (Part 69)
4	Projected Part 36 Revenue Requirement Summary
5	Projected Part 64 Revenue Requirement Summary
6	Tariff Review Plan (TRP)

IOWA NETWORK ACCESS DIVISION

INTRODUCTION, OVERVIEW AND RATE DEVELOPMENT

INTRODUCTION

This filing supports revisions to Iowa Network Access Division Tariff F.C.C. No. 1 in accordance with the Federal Communications Commission's (FCC) Order, In the Matter of July 2006 Annual Access Charge Tariff Filings, WCB/Pricing File No. 06-15, DA 06-650, (released March 24, 2006. This Order establishes procedures for the 2006 filing of annual access charge tariffs and Tariff Review Plans (TRPs). The requirements for summary cost support material to support the annual access charge filings to be submitted on or before June 26, 2006 are presented in the Commission's Order, In the Matter of Material to be Filed in Support of 2006 Annual Access Tariff Filings, WCB/Pricing File No. 06-15, DA 06-650 (released March 24, 2006).

This 2006 Annual Access Charge Tariff Filing covers the scheduled effective period from July 3, 2006 through June 30, 2007. This documentation volume contains the introduction, overview, rate development narrative, access rate development and corresponding cost support material to be filed with the FCC on June 26, 2006.

OVERVIEW

Schedule A of Section 2 presents a summary of the proposed rate to be effective July 3, 2006. The Company proposes to implement a switched transport rate of $0.00855 effective July 3, 2006 representing a reduction of $0.00176 from its existing switched transport rate. The Company's proposed switched transport rate of $0.00855 per access minute is projected to generate revenues of $11,088,539 resulting in a return of 11.19% on interstate investments for the projected twelve-month period ending June 30, 2007.

For the year 2005, the interstate access billings of Iowa Network Access Division (INAD) amounted to $9,838,276 which resulted in a return of 27.89% on its interstate investment. For the 2003/2004 monitoring period, INAD experienced a return of only 11.15%. During this period, the FCC authorized a maximum rate of return for interstate access operations of 11.50% with a target of 11.25%.

Interstate access minutes grew at a rate of 5.23% during 2005 to 954,245,936 from 906,820,518 in 2004. During the year 2004, INAD recorded interstate traffic growth of 9.09% over the year 2003. For the test period ending June 30, 2007, INAD is projecting interstate access minutes of 1,296,905,198, representing an increase of 31.83% over projected access

minutes of 983,752,575 for the projected period ending June 30, 2006 and an increase of 35.91% compared with actual interstate access minutes for the year 2005. The higher than normal increase in interstate traffic for the projected test period results primarily from a significant increase in toll aggregator traffic which began to appear during the last quarter of 2005.

Since 2000, INS has been implementing planned stages of a network modernization program that provides full redundancy and protection for its centralized equal access network to carriers serving rural Iowa. During the years 2003 and 2004, the Company completed upgrades to its fiber ring network that connects all major traffic routes throughout Iowa and expanded the capacity of its existing equal access switches to handle greater peak traffic loads. During 2004, INAD updated its equal access switch to comply with the FCC's requirements for Local Number Portability (LNP). During 2005, INAD installed significant modifications to its accounting and billing applications and its computer systems and software for improved network monitoring and security. During the year 2006, INAD is planning additional investments of approximately $3.0 million to upgrade its switching and network capabilities system wide. To date, INAD's efforts to operate and maintain its centralized equal access network more efficiently coupled with increases in interstate access minutes have enabled the Company to once again lower its centralized equal access rate, while enhancing its services provided to customers.

The proposed tariff rate of Iowa Network Access Division is targeted to generate a return of 11.19% on investment for the projected test period ended June 30, 2007. The cost support material of Iowa Network Access Division has been developed using procedures prescribed by the Federal Communications Commission as follows:

A) Financial reporting is in accordance with the Uniform Systems of Accounts and Financial Reporting Requirements of Class A and Class B Telephone Companies, CC Docket 78-196 (Part 32 Order) and all subsequent revisions to the rules adopted through the period May 15, 2006.

B) Jurisdictional allocation is in accordance with Federal Communications Commission's Rules adopted in CC Docket Nos. 78-72, 80-286, 86-297 and FCC Docket 87-134 released August 18, 1987 (Part 36 Order) and all subsequent revisions to the rules adopted through the period May 15, 2006.

C) Access rate development is performed in accordance with CC Docket No. 87-113 released August 18, 1987 (Part 69 Conformance Notice) and subsequent modifications including CC Docket No. 00-256, Second Report and Order and Notice of Proposed Rulemaking, 16 FCC Rcd 19613 (2001), ("Rate-of-Return Access Charge Reform Order".

The proposed access service tariff maintains the method of charging for interstate access by major rate element. Iowa Network Access Division proposes to reduce its current centralized equal access switched transport rate from $0.01031 to $0.00855 which is to remain in effect through June 30, 2007.

RATE DEVELOPMENT

Development of cost support as contained in the tariff filing was accomplished as follows:

1) Projection of test period investment, revenue and expense was determined based on the best estimates of management using fixed, known and measurable amounts from the Company's 2006 and 2007 operating budgets. Anticipated changes in investments and reserves were reflected in conjunction with the Company's ongoing construction and modernization programs. Revenues were increased to reflect the projected increase in access minutes during the test period over the year 2005.

2) Projection of the test period Access Division revenue requirement was accomplished using FCC Part 64 cost allocation procedures applied to total company projected investment and expense amounts determined in (1) above. The Access Division revenue requirement summary data is contained in Section 5 of the cost support material.

3) Projection of the test period interstate access revenue requirement was accomplished using Parts 36/69 separations procedures applied to projected total Access Division investment and expense amounts determined in (2) above. The summary Part 36 and Part 69 revenue requirements are contained in Sections 3 and 4 of the cost support material.

4) Projection of access minutes for the period from July 1, 2006 through June 30, 2007 was accomplished by applying an interstate annual growth rate of 31.83% to projected interstate access minutes for the period ending June 30, 2006. Projected access minutes for the period ending June 30, 2006 represent a 3.09% increase over interstate access minutes for the historical period January 1, 2005 through December 31, 2005. Access minutes for the period ending June 30, 2007 are projected to be 1,296,905,198 compared to 983,752,575 for the projected period ending June 30, 2006 and 954,245,936 for the actual period ended December 31, 2005. Projected access minutes for the test period ending June 30, 2007 are presented on Schedule B following. The increase in test period projected access minutes results primarily from additional terminating conference call minutes handled by call aggregators. For the test period ending June 30, 2007, INAD projects an additional 300 million interstate terminating conference call minutes generated by call aggregators. Without this additional aggregator traffic, the

increase in interstate access minutes projected for the test period ending June 30, 2007 would have been consistent with prior years.

5) The interstate access revenue requirement of INAD determined in (3) above for the projected period ending June 30, 2007 amounts to $11,088,539 and is presented in Section 3 of the cost support material.

6) The projected switched transport charge was determined by dividing the interstate revenue requirement of $11,092,328 determined in (5) above by projected access minutes of 1,296,905,198 determined in (4) above resulting in a cost of $0.00855 per access minute. An analysis of the development of the interstate switched transport rate is presented on Schedule A in Section 2.

SUMMARY

The 2006 annual access tariff filing is supplemented by the enclosed cost support material. Schedule A reflects the Company's existing switched transport charge of $0.01031 compared with the authorized rate of $0.00855. Through this filing, the Company proposes to reduce its switched transport charge from $0.01031 to $0.00855 for the test period ending June 30, 2007 resulting in a reduction of switched transport revenue of $2,282,553 for the period ending June 30, 2007. The proposed switched transport charge will produce revenues that will generate a rate of return on investment of 11.19% for the test period ended June 30, 2007.

Included in the cost support material are schedules depicting projected investment and expense data, demand quantities, jurisdictional cost allocations and rate calculations for the twelve-month period ending June 30, 2007. Cost and revenue data for the historical period from January 1 through December 31, 2005 is contained in the Company's Tariff Review Plan (TRP) which has been filed under separate cover.

This filing is presented to comply with the Commission's July 3, 2006 annual access tariff filing requirements in Order, DA 06-649 and subsequent Order, DA 06-650 establishing the Tariff Review Plan (TRP) schedules to be filed in support of the annual access charge tariff filing. With this filing, the Company proposes to implement a switched transport charge of $0.00855 effective July 3, 2006.

PUBLIC VERSION

TARIFF REVIEW PLAN

INDEX

RORCOS-1(P)	Page 1 of 4
RORCOS-1(P)	Page 2 of 4
RORCOS-1(P)	Page 3 of 4
RORCOS-1(P)	Page 4 of 4
RORCOS-1(H)	Page 1 of 4
RORCOS-1(H)	Page 2 of 4
RORCOS-1(H)	Page 3 of 4
RORCOS-1(H)	Page 4 of 4
RORCOS-2	Page 1 of 3
RORCOS-2	Page 2 of 3
RORCOS-2	Page 3 of 3
RORMAG-1	Page 1 of 1
RORMAG-2	Page 1 of 1
RORREV-1	Page 1 of 2
RORREV-1	Page 2 of 2
RORREV-2	Page 1 of 1
RORRTE-1	Page 1 of 2
RORRTE-1	Page 2 of 2
RORRTE-2	Page 1 of 1
RORRTE-3	Page 1 of 2
RORRTE-3	Page 2 of 2
RORDMD-1	Page 1 of 3
RORDMD-1	Page 2 of 3
RORDMD-1	Page 3 of 3
RORDMD-2	Page 1 of 1
RORDMD-3	Page 1 of 1
RORDMD-4	Page 1 of 1
RORDMD-5	Page 1 of 1
RORERN-1	Page 1 of 1
RORBSF-1	Page 1 of 1
RORDEM-1	Page 1 of 1
61.38 ACR-1 Historical	Page 1 of 1
61.38 ACR-1 Projected	Page 1 of 1

Certification

CERTIFICATION

I certify that I am a consultant authorized by Iowa Network Services, Inc. to deal with matters involving the interstate access tariff filing of Iowa Network Access Division; that I have examined the foregoing Tariff Review Plan; statements of fact contained in this Tariff Review Plan are true and this report is a correct statement of the business and affairs of the above named respondent in respect to each and every matter set forth therein during the period from July 3, 2006 to June 30, 2007.

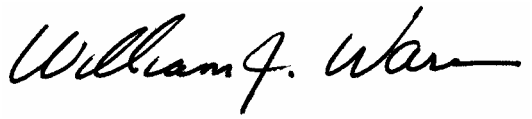

William J. Warinner
WARINNER, GESINGER & ASSOCIATES, LLC

June 26, 2006

IOWA NETWORK ACCESS DIVISION

TARIFF F.C.C. NO. 1
21st Revised Page 1
Cancels 20th Revised Page 1

CENTRALIZED EQUAL ACCESS SERVICE

Title Page 1 and Page 1 to 188 and Supplement No. 7, inclusive, of this tariff are effective as of the date shown. Original and revised pages as named below contain all changes from the original tariff that are in effect on the date hereof.

Page	Number of Revision Except as Indicated	Page	Number of Revision Except as Indicated	Page	Number of Revision Except as Indicated	Page	Number of Revision Except as Indicated
1*	21st	28	1st	55	Original	80	Original
1.1*	7th	29	1st	56	1st	81	Original
2	1st	30	Original	57	Original	82	Original
3	Original	31	Original	58	1st	83	2nd
4	1st	32	Original	59	Original	84	1st
5	3rd	33	1st	60	Original	85	1st
6	3rd	34	Original	61	2nd	86	2nd
7	1st	35	Original	61.1	Original	87	1st
8	1st	36	Original	62	1st	87.1	Original
9	Original	37	2nd	63	3rd	88	3rd
10	1st	38	1st	63.1	1st	89	3rd
11	2nd	39	2nd	64	1st	89.1	1st
12	1st	40	3rd	64.1	1st	89.2	1st
13	5th	40.1	Original	65	1st	89.3	1st
13.1	Original	41	Original	66	Original	89.4	1st
14	1st	42	1st	67	Original	90	2nd
15	1st	43	3rd	68	Original	91	Original
16	2nd	43.1	Original	69	1st	92	2nd
17	Original	44	Original	69.1	1st	93	2nd
18	Original	45	1st	70	Original	94	1st
19	1st	46	1st	71	Original	95	1st
20	1st	46.1	Original	72	3rd	96	1st
21	2nd	47	Original	72.1	1st	97	1st
21.1	1st	48	Original	73	1st	98	1st
22	Original	49	Original	74	Original		
23	Original	50	1st	75	Original		
24	Original	51	1st	76	1st		
25	Original	52	1st	77	Original		
26	Original	53	1st	78	1st		
27	Original	54	Original	79	Original		

* New or Revised page

IOWA NETWORK ACCESS DIVISION

TARIFF F.C.C. NO. 1
7th Revised Page 1.1
Cancels 6th Revised Page 1.1

CENTRALIZED EQUAL ACCESS SERVICE

CHECK SHEET

Title Page 1 and Page 1 to 188 and Supplement No. 7, inclusive, of this tariff are effective as of the date shown. Original and revised pages as named below contain all changes from the original tariff that are in effect on the date hereof.

Page	Number of Revision Except as Indicated	Page	Number of Revision Except as Indicated	Page	Number of Revision Except as Indicated	Page	Number of Revision Except as Indicated
99	1st	123	Original	147	1st	172	Original
100	1st	124	1st	147.1	Original	173	1st
101	1st	125	1st	148	2nd	174	1st
102	Original	126	Original	14*	2nd	175	Original
103	Original	127	Original	149.1	Original	176	Original
104	2nd	128	Original	150	2nd	177	1st
105	1st	129	1st	151	2nd	178	1st
105.1	1st	129.1	1st	151.1	Original	179	Original
105.2	1st	130	1st	152	2nd	180	1st
105.3	Original	131	Original	153	2nd	181	1st
106	Original	132	2nd	153.1	Original	182	Original
107	Original	133	Original	154	1st	183	Original
108	2nd	134	1st	155	1st	184	Original
109	Original	135	1st	156	1st	185	Original
110	Original	136	2nd	157	Original	186	Original
111	Original	136.1	2nd	158	Original	187	Original
112	1st	136.1.1	Original	159	Original	188	Original
113	1st	136.2	1st	160	Original		
114	1st	137	1st	161	Original		
115	1st	138	2nd	162	Original		
116	1st	139	1st	163	Original		
117	Original	140	2nd	164	Original		
118	1st	140.1	Original	165	Original		
118.1	Original	141	1st	166	Original		
119	1st	142	3rd	167	Original		
120	1st	143	Original	168	Original		
120.1	2nd	144	Original	169	Original		
121	1st	145*	9th	170	Original		
122	Original	146	Original	171	Original		

* New or Revised page

Issued: June 26, 2006

Effective: July 3, 2006

4201 Corporate Drive
West Des Moines, Iowa 50266-5906

CENTRALIZED EQUAL ACCESS SERVICE

6. Switched Access Service (Cont'd)

6.8 Rates and Charges

6.8.1 Switched Transport

(A) Rate

	Rate Per Access Minute	
	$ 0.00855	(R)

	Rate Per Call Blocked
(B) Network Blocking Charge +	$ 0.0070

(C) Nonrecurring Charges

(1) Installation

	Rate Per Trunk
Activation of the first trunk or SNAC contained in the order	$ 514.68
Activation of each additional trunk or SNAC contained in an order	$ 12.55

(2) Interim NXX Translation

	Rate Per Order
Activation or deactivation of the first NXX code contained in an order	$ 213.70
Activation or deactivation of each additional NXX code contained in an order	$ 23.81

+Applies to FGD

PUBLIC VERSION

IOWA NETWORK SERVICES, INC.
IOWA NETWORK ACCESS DIVISION
INTERSTATE ACCESS RATE DEVELOPMENT
TRANSMITTAL NO. 25
PROJECTED TEST PERIOD ENDED 6/30/2007

SECTION 2
SCHEDULE A

		SOURCE	CURRENT RATE	COST SUPPORT	DIFFERENCE
1	SWITCHED TRANSPORT RATE	(BELOW)	$0.01031	$0.00855	($0.00176)
2	STUDY PERIOD ACCESS MINUTES	SCHEDULE B	1,296,905,198	1,296,905,198	
3	STUDY PERIOD ACCESS REVENUE	LN 1*LN 2	$13,371,093	$11,088,539	($2,282,553)

	ACCESS RATE DEVELOPMENT	SOURCE	AMOUNT
4	PROJECTED REVENUE REQUIREMENT	SECTION 4	$11,092,328
5	LESS: MISCELLANEOUS REVENUE	RECORDS	-
7	ACCESS REVENUE REQUIREMENT	LN 4-LN 5	$11,092,328
8	PROJECTED ACCESS MINUTES	SCHEDULE B	1,296,905,198
9	PROJECTED ACCESS RATE PER MOU	LN 4/LN 5	$0.00855

PUBLIC VERSION

IOWA NETWORK SERVICES, INC.
IOWA NETWORK ACCESS DIVISION
EQUAL ACCESS MOU SUMMARY
TRANSMITTAL NO. 25
PROJECTED TEST PERIOD ENDED 6/30/2007

SECTION 2
SCHEDULE B

PRO FORMA ALL CARRIERS	DAYS	INTERSTATE INTRALATA			INTERSTATE INTERLATA			TOTAL	TOTAL
		ORIGINATING MINUTES	TERMINATING MINUTES	REVENUES	ORIGINATING MINUTES	TERMINATING MINUTES	REVENUES	MINUTES	REVENUES
7/1/2006 - 7/31/2006	31	1,083,303	1,566,889	$22,659.14	30,417,239	57,088,562	$748,174.60	90,155,993	$770,833.74
8/1/2006 - 8/31/2006	31	1,071,069	1,934,579	$25,698.29	28,741,901	62,718,096	$781,982.98	94,465,645	$807,681.27
9/1/2006 - 9/30/2006	30	1,159,620	1,884,713	$26,029.04	31,843,212	64,487,564	$823,628.14	99,375,109	$849,657.19
10/1/2006 - 10/31/2006	31	1,242,198	2,018,925	$27,882.60	34,110,803	69,079,795	$882,279.61	106,451,721	$910,162.21
11/1/2006 - 11/30/2006	30	1,236,185	2,009,152	$27,747.63	33,945,685	68,745,405	$878,008.82	105,936,427	$905,756.45
12/1/2006 - 12/31/2006	31	1,305,546	2,121,885	$29,304.54	35,850,361	72,602,676	$927,273.47	111,880,468	$956,578.00
1/1/2007 - 1/31/2007	31	1,330,272	2,162,071	$29,859.53	36,529,327	73,977,690	$944,834.99	113,999,360	$974,694.53
2/1/2007 - 2/28/2007	28	1,221,011	1,984,490	$27,407.03	33,529,006	67,901,565	$867,231.38	104,636,072	$894,638.42
3/1/2007 - 3/31/2007	31	1,369,343	2,225,573	$30,736.53	37,602,225	76,150,479	$972,585.61	117,347,620	$1,003,322.15
4/1/2007 - 4/30/2007	30	1,342,024	2,181,172	$30,123.33	36,852,051	74,631,259	$953,182.30	115,006,506	$983,305.63
5/1/2007 - 5/31/2007	31	1,402,142	2,278,881	$31,472.75	38,502,888	77,974,466	$995,881.38	120,158,377	$1,027,354.13
6/1/2007 - 6/30/2007	30	1,371,027	2,228,309	$30,774.32	37,648,457	76,244,106	$973,781.41	117,491,899	$1,004,555.73
TOTAL		15,133,740	24,596,640	$339,694.74	415,573,154	841,601,664	$10,748,844.70	1,296,905,198	$11,088,539.44
3rd QUARTER		3,313,992	5,386,181	$74,386.47	91,002,353	184,294,223	$2,353,785.72	283,996,748	$2,428,172.19
4th QUARTER		3,783,929	6,149,963	$84,934.77	103,906,848	210,427,877	$2,687,561.90	324,268,616	$2,772,496.67
1st QUARTER		3,920,626	6,372,134	$88,003.10	107,660,557	218,029,734	$2,784,651.99	335,983,052	$2,872,655.09
2nd QUARTER		4,115,194	6,688,362	$92,370.40	113,003,396	228,849,831	$2,922,845.09	352,656,782	$3,015,215.49
TOTAL COMPANY		15,133,740	24,596,640	$339,694.74	415,573,154	841,601,664	$10,748,844.70	1,296,905,198	$11,088,539.44

PUBLIC VERSION

IOWA NETWORK ACCESS DIVISION
PROJECTED JUNE 30, 2007

COST SUPPORT MATERIAL
PART 69 COST ALLOCATION

SECTION 3

A-1,1of1

SUMMARY OF REVENUE REQUIREMENT BY ACCESS ELEMENT

A-1,1of1

					COMMON LINE		TRAFFIC SENSITIVE					SPECIAL ACCESS						
					LIMITED	COMMON			COMMON TRANSPORT		DEDICATED	NEL TERMINATION		CHANNEL MILEAGE			IX CATEGORY	
LN	A/C	DESCRIPTION	TOTAL COMPANY	SOURCE	PAY	LINE	SWITCHING	INFO	TERM	FACILITY	TRANSPORT	ALLOCATED	TERM	TERM	FACILITY	B&C	MSG	P.L.
1		NET INVESTMENT FOR SETTLEMENTS	4,097,388	(NOTE A)	0	0	2,688,346	0	1,409,042	0	0	0	0	0	0	0	0	0
2		RATE OF RETURN	11.2500%		11.2500%	11.2500%	11.2500%	11.2500%	11.2500%	11.2500%	11.2500%	11.2500%	11.2500%	11.2500%	11.2500%	11.2500%	11.2500%	11.2500%
3		RETURN ON INVESTMENT	460,956	LN 1*LN 2	0	0	302,439	0	158,517	0	0	0	0	0	0	0	0	0
4		ALLOW FOR FUNDS USED DURING CONSTR	0	A-8,LN 29	0	0	0	0	0	0	0	0	0	0	0	0	0	0
5		NET RETURN FOR SETTLEMENTS	460,956	LN 3-LN 4	0	0	302,439	0	158,517	0	0	0	0	0	0	0	0	0
6		FEDERAL OPERATING INCOME TAX - ACTUAL	0	RECORDS	0	0	0	0	0	0	0	0	0	0	0	0	0	0
7		FEDERAL OPERATING INCOME TAX - OPTION	229,025	LN 30	0	0	150,266	0	78,759	0	0	0	0	0	0	0	0	0
8		FEDERAL ITC AMORTIZATION	0	A-12,LN 22	0	0	0	0	0	0	0	0	0	0	0	0	0	0
9		STATE OPERATING INCOME TAX - ACTUAL	0	RECORDS	0	0	0	0	0	0	0	0	0	0	0	0	0	0
10		STATE OPERATING INCOME TAX - OPTION	76,240	LN 36	0	0	50,022	0	26,218	0	0	0	0	0	0	0	0	0
11		STATE ITC AMORTIZATION	0	A-12,LN 23	0	0	0	0	0	0	0	0	0	0	0	0	0	0
12		PROVISION FOR DEFERRED INCOME TAX	0	RECORDS	0	0	0	0	0	0	0	0	0	0	0	0	0	0
13		OPERATING EXPENSE & OTHER TAXES	10,244,918	A-8,LN 18	0	0	1,805,070	0	946,091	7,493,758	0	0	0	0	0	0	0	0
14		NONOPERATING EXP	1,496	A-8,LN 23	0	0	981	0	514	0	0	0	0	0	0	0	0	0
15		UNCOLLECTIBLES	79,693	A-8,LN 28	0	0	52,288	0	27,406	0	0	0	0	0	0	0	0	0
16		BASIS FOR GROSS RECEIPTS TAX	11,092,328		0	0	2,361,066	0	1,237,505	7,493,758	0	0	0	0	0	0	0	0
17		GROSS RECEIPTS TAX RATE	0.0000%		0.0000%	0.0000%	0.0000%	0.0000%	0.0000%	0.0000%	0.0000%	0.0000%	0.0000%	0.0000%	0.0000%	0.0000%	0.0000%	0.0000%
18		GROSS RECEIPTS TAX	0	LN16*LN17	0	0	0	0	0	0	0	0	0	0	0	0	0	0
19		TOTAL REVENUE REQUIREMENT	11,092,328	LN16+LN18	0	0	2,361,066	0	1,237,505	7,493,758	0	0	0	0	0	0	0	0

NOTE A: INCLUDES A-2,LN 31 LESS A/C 2004, TPUC - LONG TERM

		OPTIONAL GROSS UP INCOME TAX CALCULATION																
20		RETURN ON INVESTMENT	460,956	LN 3	0	0	302,439	0	158,517	0	0	0	0	0	0	0	0	0
21		INTEREST AND RELATED ITEMS	16,378	A-12,LN 16	0	0	10,746	0	5,632	0	0	0	0	0	0	0	0	0
22		OTHER INCOME ADJUSTMENTS	0	A-12,LN 20	0	0	0	0	0	0	0	0	0	0	0	0	0	0
23		TOTAL INCOME ADJUSTMENTS	16,378	LN21+LN22	0	0	10,746	0	5,632	0	0	0	0	0	0	0	0	0
24		RETURN LESS INCOME ADJ	444,578	LN20-LN23	0	0	291,693	0	152,885	0	0	0	0	0	0	0	0	0
25		FEDERAL ITC AMORTIZATION	0	A-12,LN 22	0	0	0	0	0	0	0	0	0	0	0	0	0	0
26		FIT BASE	444,578		0	0	291,693	0	152,885	0	0	0	0	0	0	0	0	0
27		FEDERAL TAXABLE INCOME	673,603		0	0	441,959	0	231,644	0	0	0	0	0	0	0	0	0
28	34.00%	FEDERAL INCOME TAX	229,025	LN 27*FTR	0	0	150,266	0	78,759	0	0	0	0	0	0	0	0	0
29		FEDERAL SURTAX ALLOCATION	0	/LN 26	0	0	0	0	0	0	0	0	0	0	0	0	0	0
30		NET FEDERAL TAX BEFORE ITC AMORT	229,025	LN28-LN29	0	0	150,266	0	78,759	0	0	0	0	0	0	0	0	0
31		STATE ITC AMORTIZATION	0	A-12, LN23	0	0	0	0	0	0	0	0	0	0	0	0	0	0
32		SIT BASE	673,603		0	0	441,959	0	231,644	0	0	0	0	0	0	0	0	0
33		STATE TAXABLE INCOME	765,458		0	0	502,226	0	263,232	0	0	0	0	0	0	0	0	0
34	12.00%	STATE INCOME TAX	76,240	LN 33*STR	0	0	50,022	0	26,218	0	0	0	0	0	0	0	0	0
35		STATE SURTAX ALLOCATION	0	/LN 32	0	0	0	0	0	0	0	0	0	0	0	0	0	0
36		NET STATE INCOME TAX BEFORE ITC AMORT	76,240	LN34-LN35	0	0	50,022	0	26,218	0	0	0	0	0	0	0	0	0
37		FEDERAL TAX AT MAXIMUM RATE	229,025		0	0	150,266	0	78,759	0	0	0	0	0	0	0	0	0
38		INCOME ADJUSTMENT FOR FIT	0		0	0	0	0	0	0	0	0	0	0	0	0	0	0

PUBLIC VERSION

SUMMARY OF TELEPHONE PLANT AND RESERVES

					COMMON LINE		TRAFFIC SENSITIVE					SPECIAL ACCESS						
					LIMITED	COMMON			COMMON TRANSPORT		DEDICATED	NEL TERMINATION		CHANNEL MILEAGE			IX CATEGORY	
LN	A/C	DESCRIPTION	TOTAL COMPANY	SOURCE	PAY	LINE	SWITCHING	INFO	TERM	FACILITY	TRANSPORT	ALLOCATED	TERM	TERM	FACILITY	B&C	MSG	P.L.
		NET INVESTMENT SUMMARY																
1		GENERAL SUPPORT FACILITIES	2,067,577	A-3,LN 6C	0	0	1,356,562	0	711,014	0	0	0	0	0	0		0	0
2		CENTRAL OFFICE SWITCHING	11,726,915	A-4,LN 21+25			7,694,172		4,032,744		0						0	
3		OPERATOR SYSTEMS	0	A-4,LN 17			0	0	0		0						0	
4		CENTRAL OFFICE TRANSMISSION	0	A-4,LN 41	0	0			0		0	0	0	0			0	0
5		INFORMATION ORIG/TERM	0	A-5,LN 10	0	0							0					
6		CABLE AND WIRE FACILITIES	0	A-5,LN 21	0	0				0	0	0	0		0		0	0
7		TANGIBLE ASSETS	264,891	A-3,LN 14	0	0	173,798	0	91,093	0	0	0	0	0	0		0	0
8		INTANGIBLE ASSETS	119,088	A-3,LN 15	0	0	78,135	0	40,953	0	0	0	0	0	0		0	0
9		TOTAL PLANT IN SERVICE	14,178,470		0	0	9,302,667	0	4,875,804	0	0	0	0	0	0		0	0
10		% DISTRIBUTION	100.0000%		0.0000%	0.0000%	65.6112%	0.0000%	34.3888%	0.0000%	0.0000%	0.0000%	0.0000%	0.0000%	0.0000%		0.0000%	0.0000%
11		PROPERTY HELD FOR FUTURE USE	0	A-6,LN 6	0	0	0	0	0	0	0	0	0	0	0		0	0
12		PLANT UNDER CONSTRUCT. - SHORT TERM	0	A-6,LN 13	0	0	0	0	0	0	0	0	0	0	0		0	0
13		PLANT UNDER CONSTRUCT. - LONG TERM	0	A-6,LN 20	0	0	0	0	0	0	0	0	0	0	0		0	0
14		TELEPHONE PLANT ADJUSTMENT	0	A-6,LN 27	0	0	0	0	0	0	0	0	0	0	0		0	0
15		TOTAL PROPERTY,PLANT & EQUIP.	14,178,470		0	0	9,302,667	0	4,875,804	0	0	0	0	0	0		0	0
16		% DISTRIBUTION	100.0000%		0.0000%	0.0000%	65.6112%	0.0000%	34.3888%	0.0000%	0.0000%	0.0000%	0.0000%	0.0000%	0.0000%		0.0000%	0.0000%
17		ACCUM DEPRECIATION - PLANT IN SERVICE	8,496,624	A-7,LN 7	0	0	5,574,739	0	2,921,886	0	0	0	0	0	0		0	0
18		ACCUM DEPRECIATION - FUTURE USE	0	A-7,LN 8	0	0	0	0	0	0	0	0	0	0	0		0	0
19		ACCUM AMORTIZATION - TANGIBLE PROPERTY	241,871	A-7,LN 15	0	0	158,695	0	83,177	0	0	0	0	0	0		0	0
20		ACCUM AMORTIZATION - INTANGIBLE PROP.	119,088	A-7,LN 16	0	0	78,135	0	40,953	0	0	0	0	0	0		0	0
21		ACCUM AMORTIZATION - TEL PLANT ADJ.	0	A-7,LN 17	0	0	0	0	0	0	0	0	0	0	0		0	0
22		OPERATING DEFERRED INCOME TAX	1,677,033	A-7,LN 26	0	0	1,100,322	0	576,711	0	0	0	0	0	0		0	0
23		OTHER DEFERRED CREDITS - NET	0	A-7,LN 34	0	0	0	0	0	0	0	0	0	0	0		0	0
24		NET TELEPHONE PLANT	3,643,853		0	0	2,390,776	0	1,253,077	0	0	0	0	0	0		0	0
25		% DISTRIBUTION	100.0000%		0.0000%	0.0000%	65.6112%	0.0000%	34.3888%	0.0000%	0.0000%	0.0000%	0.0000%	0.0000%	0.0000%		0.0000%	0.0000%
26		MATERIALS AND SUPPLIES	0	A-3,LN 16	0	0	0	0	0	0	0	0	0	0	0		0	0
27		RTB STOCK	0	A-3,LN 17	0	0	0	0	0	0	0	0	0	0	0		0	0
28		EQUAL ACCESS EQUIPMENT	0	A-3,LN 8			0											
29		OTHER JURISDICTIONAL ASSETS	0	A-3,LN 18	0	0	0	0	0	0	0	0	0	0	0		0	0
30		CASH WORKING CAPITAL	453,535	A-3,LN 10	0	0	297,570	0	155,965	0	0	0	0	0	0		0	0
31		NET TELEPHONE PLANT,M&S AND CASH WORKING CAPITAL	4,097,388		0	0	2,688,346	0	1,409,042	0	0	0	0	0	0		0	0
32		% DISTRIBUTION	100.0000%		0.0000%	0.0000%	65.6112%	0.0000%	34.3888%	0.0000%	0.0000%	0.0000%	0.0000%	0.0000%	0.0000%		0.0000%	0.0000%

PUBLIC VERSION

GENERAL SUPPORT FACILITIES AND MISCELLANEOUS PLANT ALLOCATION

					COMMON LINE		TRAFFIC SENSITIVE					SPECIAL ACCESS						
					LIMITED	COMMON			COMMON TRANSPORT		DEDICATED	NEL TERMINATION		CHANNEL MILEAGE			IX CATEGORY	
LN	A/C	DESCRIPTION	TOTAL COMPANY	SOURCE	PAY	LINE	SWITCHING	INFO	TERM	FACILITY	TRANSPORT	ALLOCATED	TERM	TERM	FACILITY	B&C	MSG	P.L.
		BASIS FOR GENERAL SUPPORT FACILITIES																
1		CENTRAL OFFICE EQUIPMENT	11,726,915	A-4,LN 42	0	0	7,694,172	0	4,032,744		0	0	0	0			0	0
2		INFORMATION ORIG/TERM	0	A-5,LN 10	0	0							0					
3		CWF EXCL CAT 1.3	0	A-5,LN 23	0	0				0	0	0	0		0		0	0
4		TOTAL	11,726,915		0	0	7,694,172	0	4,032,744	0	0	0	0	0	0		0	0
5		% DISTRIBUTION	100.0000%		0.0000%	0.0000%	65.6112%	0.0000%	34.3888%	0.0000%	0.0000%	0.0000%	0.0000%	0.0000%	0.0000%		0.0000%	0.0000%
		GENERAL SUPPORT ASSETS																
6a		ALLOCATED	2,067,577	LN 5	0	0	1,356,562	0	711,014	0	0	0	0	0	0		0	0
6b		DIRECT NON ACCESS	0	DIRECT													0	0
6c		TOTAL GENERAL SUPPORT ASSETS	2,067,577		0	0	1,356,562	0	711,014	0	0	0	0	0	0		0	0
7		% DISTRIBUTION	100.0000%		0.0000%	0.0000%	65.6112%	0.0000%	34.3888%	0.0000%	0.0000%	0.0000%	0.0000%	0.0000%	0.0000%		0.0000%	0.0000%
8		EQUAL ACCESS EQUIPMENT	0	DIRECT			0											
9		COE,IOT,CWF,GENERAL SUPPORT AND EQUAL ACCESS EQUIPMENT	13,794,492		0	0	9,050,734	0	4,743,758	0	0	0	0	0	0		0	0
10		% DISTRIBUTION	100.0000%		0.0000%	0.0000%	65.6112%	0.0000%	34.3888%	0.0000%	0.0000%	0.0000%	0.0000%	0.0000%	0.0000%		0.0000%	0.0000%
11		TANGIBLE ASSETS																
12		CAPITAL LEASES	0	LN 10	0	0	0	0	0	0	0	0	0	0	0		0	0
13		LEASEHOLD IMPROVEMENTS	264,891	LN 10	0	0	173,798	0	91,093	0	0	0	0	0	0		0	0
14		TOTAL	264,891		0	0	173,798	0	91,093	0	0	0	0	0	0		0	0
15		INTANGIBLE ASSETS	119,088	LN 10	0	0	78,135	0	40,953	0	0	0	0	0	0		0	0
16		MATERIALS AND SUPPLIES	0	LN 10	0	0	0	0	0	0	0	0	0	0	0		0	0
17		RTB STOCK	0	LN 10	0	0	0	0	0	0	0	0	0	0	0		0	0
18		OTHER JURISDICTIONAL ASSETS	0	LN 10	0	0	0	0	0	0	0	0	0	0	0		0	0
19		COE,IOT,CWF,GEN SUPP & EQUAL ACCESS FOR APPORTIONING PRESUBSCRIPTION	13,794,492		0	0	9,050,734	0	4,743,758	0	0							
20		% DISTRIBUTION	100.0000%		0.0000%	0.0000%	65.6112%	0.0000%	34.3888%	0.0000%	0.0000%							
21		COE,IOT & CWF EXCL CCL FOR ASSIGNING CARRIER ACCESS BILLING EXPENSES	11,726,915				7,694,172	0	4,032,744	0	0	0	0	0	0			
22		% DISTRIBUTION	100.0000%				65.6112%	0.0000%	34.3888%	0.0000%	0.0000%	0.0000%	0.0000%	0.0000%	0.0000%			

PUBLIC VERSION

CENTRAL OFFICE EQUIPMENT ALLOCATION

A-4,1of2

LN	A/C	DESCRIPTION	TOTAL COMPANY	SOURCE	COMMON LINE: LIMITED PAY	COMMON LINE: COMMON LINE	TRAFFIC SENSITIVE: SWITCHING	TRAFFIC SENSITIVE: INFO	TRAFFIC SENSITIVE: COMMON TRANSPORT TERM	TRAFFIC SENSITIVE: COMMON TRANSPORT FACILITY	TRAFFIC SENSITIVE: DEDICATED TRANSPORT	SPECIAL ACCESS: NEL TERMINATION ALLOCATED	SPECIAL ACCESS: NEL TERMINATION TERM	SPECIAL ACCESS: CHANNEL MILEAGE TERM	SPECIAL ACCESS: CHANNEL MILEAGE FACILITY	B&C	IX CATEGORY: MSG	IX CATEGORY: P.L.
		ALLOCATION FACTORS																
1		STANDARD WORK SECONDS																
2		- MANUAL BOARDS	100.0000%	AL-1,LN 9			0.0000%	0.0000%									100.0000%	
3		- TSPS COMPLEX	100.0000%	AL-1,LN 10			0.0000%	0.0000%									100.0000%	
4		EQUIVALENT ACCESS LINES - MSG COE	0.0000%	AL-1,LN 2	0.0000%	0.0000%						0.0000%						
5		IX CIRCUIT TERMINATIONS - MSG COE	100.0000%	AL-1,LN 6					100.0000%		0.0000%							
		CENTRAL OFFICE EQUIPMENT																
6	2220	OPERATOR SYSTEMS																
7		MANUAL SWITCHBOARDS	0	LN 2			0	0									0	
8		AUXILIARY SWITCHBOARDS																
9		- DIRECTORY ASSISTANCE	0	DIRECT				0										
10		- INTERCEPT	0	DIRECT			0											
11		- OTHER	0	DIRECT													0	
12		SERVICE OBSERVING BOARDS	0	LN 27			0	0	0		0						0	
13		TSPS																
14		- OPERATOR	0	LN 3			0	0									0	
15		- RTA	0	LN 27			0	0	0		0						0	
16		- OTHER	0	LN 27			0	0	0		0						0	
17		TOTAL OPERATOR SYSTEMS	0				0	0	0		0						0	
18	2210	TANDEM SWITCHING EQUIPMENT																
19		ACCESS	4,032,744	DIRECT					4,032,744									
20		NON ACCESS	0	DIRECT													0	
21		TOTAL TANDEM SWITCH	4,032,744						4,032,744								0	
22	2210	LOCAL SWITCHING EQUIPMENT																
23		ACCESS	7,694,172	DIRECT			7,694,172											
24		DEDICATED	0	DIRECT							0							
25		TOTAL LOCAL SWITCH	7,694,172				7,694,172				0							
26		TOTAL CAT1 EXCL SVC OBS, CAT 2 AND 3	11,726,915				7,694,172	0	4,032,744		0						0	
27		% DISTRIBUTION	100.0000%	LN 26			65.6112%	0.0000%	34.3888%		0.0000%						0.0000%	

PUBLIC VERSION

CENTRAL OFFICE EQUIPMENT ALLOCATION

A-4,2of2

LN	A/C	DESCRIPTION	TOTAL COMPANY	SOURCE	COMMON LINE: LIMITED PAY	COMMON LINE: COMMON LINE	TRAFFIC SENSITIVE: SWITCHING	TRAFFIC SENSITIVE: INFO	TRAFFIC SENSITIVE: COMMON TRANSPORT: TERM	TRAFFIC SENSITIVE: COMMON TRANSPORT: FACILITY	TRAFFIC SENSITIVE: DEDICATED TRANSPORT	SPECIAL ACCESS: NEL TERMINATION: ALLOCATED	SPECIAL ACCESS: NEL TERMINATION: TERM	SPECIAL ACCESS: CHANNEL MILEAGE: TERM	SPECIAL ACCESS: CHANNEL MILEAGE: FACILITY	B&C	IX CATEGORY: MSG	IX CATEGORY: P.L.
28	2230	CENTRAL OFFICE TRANSMISSION																
29		EXCHANGE WIDEBAND	0	DIRECT					0					0				
30		EXCHANGE TRUNK - BASIC	0	DIRECT					0					0				
31		EXCHANGE TRUNK - SPECIAL	0	DIRECT							0			0				
32		SUBSCRIBER LINE	0	LN 4/DIRECT	0	0						0	0					
33		INTEREXCHANGE CIRCUIT																
34		FURNINSHED OTHERS	0	DIRECT							0			0				
35		ACCESS - BASIC	0	LN 5/DIRECT					0		0			0				
36		ACCESS - SPECIAL	0	DIRECT							0			0				
37		NON ACCESS	0	DIRECT													0	0
38		TOTAL IX CIRCUIT	0						0		0			0			0	0
39		HOST/REMOTE CIRCUIT	0	DIRECT					0					0				
40		EQUIPMENT RENTED OTHERS	0	DIRECT													0	0
41		TOTAL CENTRAL OFFICE TRANSMISSION	0		0	0			0		0	0	0	0			0	0
42		TOTAL CENTRAL OFFICE EQUIPMENT	11,726,915		0	0	7,694,172	0	4,032,744		0	0	0	0			0	0
43		% DISTRIBUTION	100.0000%		0.0000%	0.0000%	65.6112%	0.0000%	34.3888%		0.0000%	0.0000%	0.0000%	0.0000%			0.0000%	0.0000%
		COE RATIOS																
44		OPERATOR SYSTEMS	0.0000%	LN 17			0.0000%	0.0000%	0.0000%		0.0000%						0.0000%	
45		TANDEM SWITCHING	100.0000%	LN 21					100.0000%								0.0000%	
46		LOCAL SWITCHING	100.0000%	LN 25			100.0000%				0.0000%							
47		CENTRAL OFFICE SWITCHING	100.0000%	LN 21+25			65.6112%		34.3888%		0.0000%						0.0000%	
48		CENTRAL OFFICE TRANSMISSION	100.0000%	LN 37	0.0000%	0.0000%			100.0000%		0.0000%	0.0000%	0.0000%	0.0000%			0.0000%	0.0000%

PUBLIC VERSION

INFORMATION ORIGINATION/TERMINATION AND CABLE AND WIRE FACILITIES

LN	A/C	DESCRIPTION	TOTAL COMPANY	SOURCE	COMMON LINE: LIMITED PAY	COMMON LINE: COMMON LINE	TRAFFIC SENSITIVE: SWITCHING	TRAFFIC SENSITIVE: INFO	TRAFFIC SENSITIVE: COMMON TRANSPORT TERM	TRAFFIC SENSITIVE: COMMON TRANSPORT FACILITY	TRAFFIC SENSITIVE: DEDICATED TRANSPORT	SPECIAL ACCESS: NEL TERMINATION ALLOCATED	SPECIAL ACCESS: NEL TERMINATION TERM	SPECIAL ACCESS: CHANNEL MILEAGE TERM	SPECIAL ACCESS: CHANNEL MILEAGE FACILITY	B&C	IX CATEGORY: MSG	IX CATEGORY: P.L.
		ALLOCATION FACTORS																
1		EQUIVALENT ACCESS LINES - MSG CWF	0.0000%	AL-1,LN 4	0.0000%	0.0000%						0.0000%						
2		IX CIRCUIT MILES - MSG CWF	100.0000%	AL-1,LN 8						100.0000%	0.0000%							
3	2310	INFORMATION ORIG/TERM																
4		OTHER IOT EQUIPMENT																
5		COIN PUBLIC TELEPHONE	0	DIRECT		0												
6		COINLESS PUBLIC TELEPHONE	0	DIRECT	0													
7		OTHER	0	DIRECT		0							0					
8		SUBTOTAL	0		0	0							0					
9		NEW CUSTOMER PREMISE EQUIP	0	DIRECT		0							0					
10		TOTAL ORIG/TERM EQUIP	0		0	0							0					
11		% DISTRIBUTION	0.0000%		0.0000%	0.0000%							0.0000%					
12	2410	CABLE AND WIRE FACILITIES																
13		SUBSCRIBER LINE	0	LN 1/DIRECT	0	0						0	0					
14		EXCHANGE WIDEBAND	0	DIRECT						0					0			
15a		EXCHANGE TRUNK - BASIC	0	DIRECT						0					0			
15b		EXCHANGE TRUNK - SPECIAL	0	DIRECT							0				0			
16		INTEREXCHANGE WIDEBAND	0	DIRECT						0					0			
17a		IX TRUNK - ACCESS	0	LN 2/DIRECT						0	0				0			
17b		IX TRUNK - SPECIAL	0	DIRECT							0				0			
18		IX TRUNK - NON ACCESS	0	DIRECT													0	0
19		HOST/REMOTE	0	DIRECT						0					0			
20		EQUIPMENT FURNISHED OTHERS	0	DIRECT													0	0
21		TOTAL CABLE AND WIRE FACILITIES	0		0	0				0	0	0	0		0		0	0
22		% DISTRIBUTION	100.0000%		0.0000%	0.0000%				100.0000%	0.0000%	0.0000%	0.0000%		0.0000%		0.0000%	0.0000%
23		TOTAL CWF EXCLUDING CAT 1.3	0		0	0				0	0	0	0		0		0	0
24		% DISTRIBUTION	100.0000%		0.0000%	0.0000%				100.0000%	0.0000%	0.0000%	0.0000%		0.0000%		0.0000%	0.0000%

PUBLIC VERSION

OTHER TELECOMMUNICATIONS PLANT ALLOCATION

A-6,1of1

LN	A/C	DESCRIPTION	TOTAL COMPANY	SOURCE	COMMON LINE LIMITED PAY	COMMON LINE COMMON LINE	TRAFFIC SENSITIVE SWITCHING	TRAFFIC SENSITIVE INFO	TRAFFIC SENSITIVE COMMON TRANSPORT TERM	TRAFFIC SENSITIVE COMMON TRANSPORT FACILITY	TRAFFIC SENSITIVE DEDICATED TRANSPORT	SPECIAL ACCESS NEL TERMINATION ALLOCATED	SPECIAL ACCESS NEL TERMINATION TERM	SPECIAL ACCESS CHANNEL MILEAGE TERM	SPECIAL ACCESS CHANNEL MILEAGE FACILITY	B&C	IX CATEGORY MSG	IX CATEGORY P.L.
		OTHER TELECOMMUNICATIONS PLANT																
1	2002	PROPERTY HELD FOR FUTURE USE																
2		GENERAL SUPPORT	0	A-3,LN 7	0	0	0	0	0	0	0	0	0	0	0		0	0
3		CENTRAL OFFICE EQUIPMENT	0	A-4,LN 43	0	0	0	0	0	0	0	0	0	0	0		0	0
4		CABLE AND WIRE FACILITIES	0	A-5,LN 22	0	0				0	0	0	0	0	0		0	0
5		UNDISTRIBUTED	0	A-3,LN 10	0	0	0	0	0	0	0	0	0	0	0		0	0
6		TOTAL	0		0	0	0	0	0	0	0	0	0	0	0		0	0
7		% DISTRIBUTION	0.0000%		0.0000%	0.0000%	0.0000%	0.0000%	0.0000%	0.0000%	0.0000%	0.0000%	0.0000%	0.0000%	0.0000%		0.0000%	0.0000%
8	2003	PLANT UNDER CONSTR. - SHORT TERM																
9		GENERAL SUPPORT	0	A-3,LN 7	0	0	0	0	0	0	0	0	0	0	0		0	0
10		CENTRAL OFFICE EQUIPMENT	0	A-4,LN 43	0	0	0	0	0	0	0	0	0	0	0		0	0
11		CABLE AND WIRE FACILITIES	0	A-5,LN 22	0	0				0	0	0	0	0	0		0	0
12		UNDISTRIBUTED	0	A-3,LN 10	0	0	0	0	0	0	0	0	0	0	0		0	0
13		TOTAL	0		0	0	0	0	0	0	0	0	0	0	0		0	0
14		% DISTRIBUTION	0.0000%		0.0000%	0.0000%	0.0000%	0.0000%	0.0000%	0.0000%	0.0000%	0.0000%	0.0000%	0.0000%	0.0000%		0.0000%	0.0000%
15	2004	PLANT UNDER CONSTR. - LONG TERM																
16		GENERAL SUPPORT	0	A-3,LN 7	0	0	0	0	0	0	0	0	0	0	0		0	0
17		CENTRAL OFFICE EQUIPMENT	0	A-4,LN 43	0	0	0	0	0	0	0	0	0	0	0		0	0
18		CABLE AND WIRE FACILITIES	0	A-5,LN 22	0	0				0	0	0	0	0	0		0	0
19		UNDISTRIBUTED	0	A-3,LN 10	0	0	0	0	0	0	0	0	0	0	0		0	0
20		TOTAL	0		0	0	0	0	0	0	0	0	0	0	0		0	0
21		% DISTRIBUTION	0.0000%		0.0000%	0.0000%	0.0000%	0.0000%	0.0000%	0.0000%	0.0000%	0.0000%	0.0000%	0.0000%	0.0000%		0.0000%	0.0000%
22	2005	TELECOMMUNICATIONS PLANT ADJUST.																
23		GENERAL SUPPORT	0	A-3,LN 7	0	0	0	0	0	0	0	0	0	0	0		0	0
24		CENTRAL OFFICE EQUIPMENT	0	A-4,LN 43	0	0	0	0	0	0	0	0	0	0	0		0	0
25		CABLE AND WIRE FACILITIES	0	A-5,LN 22	0	0				0	0	0	0	0	0		0	0
26		UNDISTRIBUTED	0	A-3,LN 10	0	0	0	0	0	0	0	0	0	0	0		0	0
27		TOTAL	0		0	0	0	0	0	0	0	0	0	0	0		0	0
28		% DISTRIBUTION	0.0000%		0.0000%	0.0000%	0.0000%	0.0000%	0.0000%	0.0000%	0.0000%	0.0000%	0.0000%	0.0000%	0.0000%		0.0000%	0.0000%

PUBLIC VERSION

ACCUMULATED DEPRECIATION, AMORTIZATION AND DEFERRED INCOME TAXES

					COMMON LINE		TRAFFIC SENSITIVE					SPECIAL ACCESS						
					LIMITED	COMMON			COMMON TRANSPORT		DEDICATED	NEL TERMINATION		CHANNEL MILEAGE			IX CATEGORY	
LN	A/C	DESCRIPTION	TOTAL COMPANY	SOURCE	PAY	LINE	SWITCHING	INFO	TERM	FACILITY	TRANSPORT	ALLOCATED	TERM	TERM	FACILITY	B&C	MSG	P.L.
1	3100	ACCUM DEPRECIATION - PLANT IN SERVICE																
2		GENERAL SUPPORT	1,268,621	A-3,LN 10	0	0	832,358	0	436,263	0	0	0	0	0	0		0	0
3		CENTRAL OFFICE SWITCHING EQUIPMENT	7,228,004	A-3,LN 10	0	0	4,742,381	0	2,485,623	0	0	0	0	0	0		0	0
4		OPERATOR SYSTEMS EQUIPMENT	0	A-3,LN 10	0	0	0	0	0	0	0	0	0	0	0		0	0
5		CENTRAL OFFICE TRANSMISSION	0	A-3,LN 10	0	0	0	0	0	0	0	0	0	0	0		0	0
6		UNDISTRIBUTED COE	0	A-3,LN 10	0	0	0	0	0	0	0	0	0	0	0		0	0
7		INFORMATION ORIG/TERM	0	A-3,LN 10	0	0	0	0	0	0	0	0	0	0	0		0	0
8		CABLE AND WIRE FACILITIES	0	A-3,LN 10	0	0	0	0	0	0	0	0	0	0	0		0	0
9		TOTAL ACCUM DEPR - TPIS	8,496,624		0	0	5,574,739	0	2,921,886	0	0	0	0	0	0		0	0
10	3200	ACCUM DEPRECIATION - FUTURE USE	0	A-3,LN 10	0	0	0	0	0	0	0	0	0	0	0		0	0
11		TOTAL ACCUM DEPRECIATION	8,496,624		0	0	5,574,739	0	2,921,886	0	0	0	0	0	0		0	0
12		% DISTRIBUTION	100.0000%		0.0000%	0.0000%	65.6112%	0.0000%	34.3888%	0.0000%	0.0000%	0.0000%	0.0000%	0.0000%	0.0000%		0.0000%	0.0000%
		ACCUMULATED AMORTIZATION																
13	3400	TANGIBLE ASSETS																
14		CAPITAL LEASES	0	A-3,LN 10	0	0	0	0	0	0	0	0	0	0	0		0	0
15		LEASEHOLD IMPROVEMENTS	241,871	A-3,LN 10	0	0	158,695	0	83,177	0	0	0	0	0	0		0	0
16		UNDISTRIBUTED	0	A-3,LN 10	0	0	0	0	0	0	0	0	0	0	0		0	0
17		TOTAL ACCUM AMORT - TANGIBLE	241,871		0	0	158,695	0	83,177	0	0	0	0	0	0		0	0
18	3500	INTANGIBLE ASSETS	119,088	A-3,LN 10	0	0	78,135	0	40,953	0	0	0	0	0	0		0	0
19	3600	TELEPHONE PLANT ADJUSTMENT	0	A-3,LN 10	0	0	0	0	0	0	0	0	0	0	0		0	0
20		TOTAL ACCUM AMORTIZATION	360,959		0	0	236,830	0	124,129	0	0	0	0	0	0		0	0
21		% DISTRIBUTION	100.0000%		0.0000%	0.0000%	65.6112%	0.0000%	34.3888%	0.0000%	0.0000%	0.0000%	0.0000%	0.0000%	0.0000%		0.0000%	0.0000%
22	4100&	NET OPERATING DEFERRED INC TAX																
23	4340	GENERAL SUPPORT	0	A-3,LN 10	0	0	0	0	0	0	0	0	0	0	0		0	0
24		CENTRAL OFFICE EQUIP	0	A-3,LN 10	0	0	0	0	0	0	0	0	0	0	0		0	0
25		INFORMATION ORIG/TERM	0	A-3,LN 10	0	0	0	0	0	0	0	0	0	0	0		0	0
26		CABLE AND WIRE FACILITIES	0	A-3,LN 10	0	0	0	0	0	0	0	0	0	0	0		0	0
27		UNDISTRIBUTED	1,677,033	A-3,LN 10	0	0	1,100,322	0	576,711	0	0	0	0	0	0		0	0
28		TOTAL NET DEFERRED INC TAX	1,677,033		0	0	1,100,322	0	576,711	0	0	0	0	0	0		0	0
29		% DISTRIBUTION	100.0000%		0.0000%	0.0000%	65.6112%	0.0000%	34.3888%	0.0000%	0.0000%	0.0000%	0.0000%	0.0000%	0.0000%		0.0000%	0.0000%
30	4360	OTHER DEFERRED CREDITS - NET																
31		GENERAL SUPPORT	0	A-3,LN 10	0	0	0	0	0	0	0	0	0	0	0		0	0
32		CENTRAL OFFICE EQUIP	0	A-3,LN 10	0	0	0	0	0	0	0	0	0	0	0		0	0
33		INFORMATION ORIG/TERM	0	A-3,LN 10	0	0	0	0	0	0	0	0	0	0	0		0	0
34		CABLE AND WIRE FACILITIES	0	A-3,LN 10	0	0	0	0	0	0	0	0	0	0	0		0	0
35		UNDISTRIBUTED	0	A-3,LN 10	0	0	0	0	0	0	0	0	0	0	0		0	0
36		TOTAL OTHER DEFERRED CREDITS	0		0	0	0	0	0	0	0	0	0	0	0		0	0
37		% DISTRIBUTION	0.0000%		0.0000%	0.0000%	0.0000%	0.0000%	0.0000%	0.0000%	0.0000%	0.0000%	0.0000%	0.0000%	0.0000%		0.0000%	0.0000%

PUBLIC VERSION

SUMMARY OF OPERATING EXPENSE AND TAX AND MISCELLANEOUS TAX ITEMS

					COMMON LINE		TRAFFIC SENSITIVE					SPECIAL ACCESS						
									COMMON TRANSPORT		DEDICATED	NEL TERMINATION		CHANNEL MILEAGE			IX CATEGORY	
LN	A/C	DESCRIPTION	TOTAL COMPANY	SOURCE	LIMITED PAY	COMMON LINE	SWITCHING	INFO	TERM	FACILITY	TRANSPORT	ALLOCATED	TERM	TERM	FACILITY	B&C	MSG	P.L.
		OPERATING EXPENSE AND TAX																
1	6110	NETWORK SUPPORT EXPENSE	0	A-9,LN 6	0	0	0	0	0	0	0	0	0	0	0	0	0	0
2	6120	GENERAL SUPPORT EXPENSE	389,536	A-9,LN 7	0	0	255,579	0	133,957	0	0	0	0	0	0		0	0
3	6210	CENTRAL OFFICE EXPENSE	448,741	A-9,LN 15	0	0	294,425	0	154,317	0	0	0	0	0	0	0	0	0
4	6310	INFORMATION ORIG/TERM EXP	0	A-9,LN 22	0	0	0	0	0	0	0	0	0	0	0	0	0	0
5	6410	CABLE AND WIRE FACILITIES EXP	6,891,903	A-9,LN 24	0	0	0	0	0	6,891,903	0	0	0	0	0		0	0
6	6510	OTHER PLANT EXPENSE	0	A-10,LN 6	0	0	0	0	0	0	0	0	0	0	0		0	0
7	6530	NETWORK OPERATIONS EXPENSE	405,808	A-10,LN 7	0	0	266,256	0	139,553	0	0	0	0	0	0		0	0
8	6540	ACCESS CHARGE EXPENSE	0	A-10,LN 8													0	0
9	6610	MARKETING EXPENSE	0	A-11,LN 1	0	0	0	0	0	0	0	0	0	0	0		0	0
8	6620	SERVICES EXPENSE	198,013	A-11,LN29	0	0	129,918	0	68,094	0	0	0	0	0	0	0	0	0
11	6710	EXECUTIVE AND PLANNING EXP	173,571	A-12,LN 8	0	0	19,706	0	10,328	143,537	0	0	0	0	0	0	0	0
12	6720	GENERAL AND ADMINISTRATIVE EXP	554,219	A-12,LN 9	0	0	62,922	0	32,979	458,318	0	0	0	0	0	0	0	0
13		SUBTOTAL OPERATING EXPENSE	9,061,792		0	0	1,028,806	0	539,228	7,493,758	0	0	0	0	0	0	0	0
14		% DISTRIBUTION	100.0000%		0.0000%	0.0000%	11.3532%	0.0000%	5.9506%	82.6962%	0.0000%	0.0000%	0.0000%	0.0000%	0.0000%	0.0000%	0.0000%	0.0000%
15	6560	DEPRECIATION AND AMORTIZATION	1,121,504	A-10,LN 19+27	0	0	735,832	0	385,671	0	0	0	0	0	0	0	0	0
16	7200	OTHER OPERATING TAX	61,623	A-12,LN 24	0	0	40,432	0	21,191	0	0	0	0	0	0		0	0
17		EQUAL ACCESS EXPENSE	0	A-12,LN 12			0											
18		TOTAL OPERATING EXP & TAX	10,244,918		0	0	1,805,070	0	946,091	7,493,758	0	0	0	0	0	0	0	0
19		% DISTRIBUTION	100.0000%		0.0000%	0.0000%	17.6192%	0.0000%	9.2347%	73.1461%	0.0000%	0.0000%	0.0000%	0.0000%	0.0000%	0.0000%	0.0000%	0.0000%
20	7370	NON OPERATING EXPENSE																
21		ABANDONED CONSTRUCTION	0	A-3,LN 10	0	0	0	0	0	0	0	0	0	0	0	0	0	0
22		CONTRIBUTIONS	1,496	A-3,LN 10	0	0	981	0	514	0	0	0	0	0	0	0	0	0
23		TOTAL NON OPERATING EXP	1,496		0	0	981	0	514	0	0	0	0	0	0	0	0	0
24		UNCOLLECTIBLES																
25	5310	END USER MSG TOLL	0	A-3,LN 10	0	0	0	0	0	0	0	0	0	0	0	0	0	0
26	5320	END USER COMMON LINE	0	DIRECT		0												
27	5330	IX CARRIER	79,693	A-3,LN 22			52,288	0	27,406	0	0	0	0	0	0	0	0	0
28		TOTAL UNCOLLECTIBLES	79,693		0	0	52,288	0	27,406	0	0	0	0	0	0	0	0	0
29	7340	ALLOWANCE FOR FUNDS USED DURING CONSTRUCTION	0	A-3,LN 10	0	0	0	0	0	0	0	0	0	0	0	0	0	0

PUBLIC VERSION

PLANT SPECIFIC EXPENSE ALLOCATION

A-9,1of1

LN	A/C	DESCRIPTION	TOTAL COMPANY	SOURCE	COMMON LINE: LIMITED PAY	COMMON LINE: COMMON LINE	TRAFFIC SENSITIVE: SWITCHING	TRAFFIC SENSITIVE: INFO	TRAFFIC SENSITIVE: COMMON TRANSPORT TERM	TRAFFIC SENSITIVE: COMMON TRANSPORT FACILITY	TRAFFIC SENSITIVE: DEDICATED TRANSPORT	SPECIAL ACCESS: NEL TERMINATION ALLOCATED	SPECIAL ACCESS: NEL TERMINATION TERM	SPECIAL ACCESS: CHANNEL MILEAGE TERM	SPECIAL ACCESS: CHANNEL MILEAGE FACILITY	B&C	IX CATEGORY: MSG	IX CATEGORY: P.L.
		BASIS FOR NETWORK SUPPORT EXPENSE																
1		GEN SUPPORT, COE, IOT AND C&WF	13,794,492	VARIOUS	0	0	9,050,734	0	4,743,758	0	0	0	0	0	0		0	0
2		EQUAL ACCESS EQUIPMENT	0	A-3,LN 8			0											
3		TOTAL	13,794,492		0	0	9,050,734	0	4,743,758	0	0	0	0	0	0		0	0
4		% DISTRIBUTION	100.0000%		0.0000%	0.0000%	65.6112%	0.0000%	34.3888%	0.0000%	0.0000%	0.0000%	0.0000%	0.0000%	0.0000%		0.0000%	0.0000%
		PLANT SPECIFIC EXPENSES																
5		GENERAL SUPPORT EXPENSE																
6	6110	NETWORK SUPPORT	0	LN 4	0	0	0	0	0	0	0	0	0	0	0		0	0
7	6120	GENERAL SUPPORT	389,536	A-3,LN 7	0	0	255,579	0	133,957	0	0	0	0	0	0		0	0
8		TOTAL GENERAL SUPPORT EXP	389,536		0	0	255,579	0	133,957	0	0	0	0	0	0		0	0
9		% DISTRIBUTION	100.0000%		0.0000%	0.0000%	65.6112%	0.0000%	34.3888%	0.0000%	0.0000%	0.0000%	0.0000%	0.0000%	0.0000%		0.0000%	0.0000%
10		CENTRAL OFFICE EXPENSE																
11	6210	CENTRAL OFFICE SWITCHING EXPENSE	448,741	A-4,LN 43	0	0	294,425	0	154,317		0	0	0	0			0	0
12	6220	OPERATOR SYSTEMS EXPENSE	0	A-4,LN 43	0	0	0	0	0		0	0	0	0			0	0
13	6230	CENTRAL OFFICE TRANSMISSION EXPENSE	0	A-4,LN 43	0	0	0	0	0		0	0	0	0			0	0
14		UNDISTRIBUTED	0	A-4,LN 43	0	0	0	0	0		0	0	0	0			0	0
15		TOTAL CENTRAL OFFICE EXPENSE	448,741		0	0	294,425	0	154,317		0	0	0	0			0	0
16		% DISTRIBUTION	100.0000%		0.0000%	0.0000%	65.6112%	0.0000%	34.3888%		0.0000%	0.0000%	0.0000%	0.0000%			0.0000%	0.0000%
17	6310	INFORMATION ORIG/TERM EXPENSE																
18		COIN PAY TELEPHONE	0	DIRECT		0												
19		COINLESS PAY TELEPHONE	0	DIRECT	0													
20		OTHER	0	DIRECT		0							0					
21		CPE	0	DIRECT		0												
22		TOTAL INFORMATION ORIG/TERM EXP	0		0	0							0					
23		% DISTRIBUTION	0.0000%		0.0000%	0.0000%							0.0000%					
24	6410	CABLE AND WIRE FACILITIES EXPENSE	6,891,903	A-5,LN 22	0	0				6,891,903	0	0	0	0	0		0	0
25		TOTAL PLANT SPECIFIC EXPENSE	7,730,181		0	0	550,004	0	288,274	6,891,903	0	0	0	0	0		0	0
26		% DISTRIBUTION	100.0000%		0.0000%	0.0000%	7.1150%	0.0000%	3.7292%	89.1558%	0.0000%	0.0000%	0.0000%	0.0000%	0.0000%		0.0000%	0.0000%

PUBLIC VERSION

PLANT NON SPECIFIC EXPENSE ALLOCATION

					COMMON LINE		TRAFFIC SENSITIVE					SPECIAL ACCESS						
					LIMITED	COMMON			COMMON TRANSPORT		DEDICATED	NEL TERMINATION		CHANNEL MILEAGE			IX CATEGORY	
LN	A/C	DESCRIPTION	TOTAL COMPANY	SOURCE	PAY	LINE	SWITCHING	INFO	TERM	FACILITY	TRANSPORT	ALLOCATED	TERM	TERM	FACILITY	B&C	MSG	P.L.
1		CENTRAL OFFICE EQUIPMENT	11,726,915	A-4,LN 38	0	0	7,694,172	0	4,032,744		0	0	0	0			0	0
2		INFORMATION ORIG/TERM	0	A-5,LN 10	0	0							0					
3		CABLE AND WIRE FACILITIES	0	A-5,LN 21	0	0				0	0	0	0		0		0	0
4		TOTAL	11,726,915		0	0	7,694,172	0	4,032,744	0	0	0	0	0	0		0	0
5		% DISTRIBUTION	100.0000%		0.0000%	0.0000%	65.6112%	0.0000%	34.3888%	0.0000%	0.0000%	0.0000%	0.0000%	0.0000%	0.0000%		0.0000%	0.0000%
		PLANT NONSPECIFIC EXPENSE																
6	6510	OTHER PROP PLANT & EQUIP EXPENSE	0	LN 5	0	0	0	0	0	0	0	0	0	0	0		0	0
7	6530	NETWORK OPERATIONS EXPENSE	405,808	LN 5	0	0	266,256	0	139,553	0	0	0	0	0	0		0	0
8	6540	ACCESS CHARGE EXPENSE	0	DIRECT													0	0
9	6560	DEPRECIATION EXPENSE																
10		GENERAL SUPPORT	195,909	A-3,LN 7	0	0	128,538	0	67,371	0	0	0	0	0	0		0	0
11		CENTRAL OFFICE SWITCHING EQUIPMENT	903,529	A-4,LN 47			592,817		310,713		0						0	
12		OPERATOR SYSTEMS EQUIPMENT	0	A-4,LN 44			0	0	0		0						0	
13		CENTRAL OFFICE TRANSMISSION	0	A-4,LN 48	0	0			0		0	0	0	0			0	0
14		UNDISTRIBUTED COE	0	A-4,LN 43	0	0	0	0	0		0	0	0	0			0	0
15		INFORMATION ORIG/TERM	0	A-5,LN 11	0	0							0					
16		CABLE AND WIRE FACILITIES	0	A-5,LN 22	0	0				0	0	0	0		0		0	0
17		TOTAL DEP EXP - PLANT IN SERVICE	1,099,438		0	0	721,355	0	378,083	0	0	0	0	0	0		0	0
18		PROPERTY HELD FOR FUTURE USE	0	A-6,LN 7	0	0	0	0	0	0	0	0	0	0	0		0	0
19		TOTAL DEPRECIATION EXPENSE	1,099,438		0	0	721,355	0	378,083	0	0	0	0	0	0		0	0
20		% DISTRIBUTION	100.0000%		0.0000%	0.0000%	65.6112%	0.0000%	34.3888%	0.0000%	0.0000%	0.0000%	0.0000%	0.0000%	0.0000%		0.0000%	0.0000%
		AMORTIZATION EXPENSE																
21	6563	CAPITAL LEASE	0	A-3,LN 10	0	0	0	0	0	0	0	0	0	0	0		0	0
22	6563	LEASEHOLD IMPROVEMNTS	22,065	A-3,LN 10	0	0	14,477	0	7,588	0	0	0	0	0	0		0	0
23	6563	UNDISTRIBUTED	0	A-3,LN 10	0	0	0	0	0	0	0	0	0	0	0		0	0
24		SUBTOTAL	22,065		0	0	14,477	0	7,588	0	0	0	0	0	0		0	0
25	6564	INTANGIBLE ASSETS	0	A-3,LN 10	0	0	0	0	0	0	0	0	0	0	0		0	0
26	6565	OTHER - TEL PLANT ADJUSTMENT	0	A-6,LN 28	0	0	0	0	0	0	0	0	0	0	0		0	0
27		TOTAL AMORTIZATION EXPENSE	22,065		0	0	14,477	0	7,588	0	0	0	0	0	0		0	0
28		% DISTRIBUTION	100.0000%		0.0000%	0.0000%	65.6112%	0.0000%	34.3888%	0.0000%	0.0000%	0.0000%	0.0000%	0.0000%	0.0000%		0.0000%	0.0000%
29		TOTAL PLANT NON SPECIFIC EXPENSE	1,527,312		0	0	1,002,088	0	525,224	0	0	0	0	0	0		0	0
30		% DISTRIBUTION	100.0000%		0.0000%	0.0000%	65.6112%	0.0000%	34.3888%	0.0000%	0.0000%	0.0000%	0.0000%	0.0000%	0.0000%		0.0000%	0.0000%

PUBLIC VERSION

CUSTOMER OPERATIONS EXPENSE ALLOCATION

A-11,1of1

LN	A/C	DESCRIPTION	TOTAL COMPANY	SOURCE	COMMON LINE: LIMITED PAY	COMMON LINE: COMMON LINE	TRAFFIC SENSITIVE: SWITCHING	TRAFFIC SENSITIVE: INFO	TRAFFIC SENSITIVE: COMMON TRANSPORT TERM	TRAFFIC SENSITIVE: COMMON TRANSPORT FACILITY	TRAFFIC SENSITIVE: DEDICATED TRANSPORT	SPECIAL ACCESS: NEL TERMINATION ALLOCATED	SPECIAL ACCESS: NEL TERMINATION TERM	SPECIAL ACCESS: CHANNEL MILEAGE TERM	SPECIAL ACCESS: CHANNEL MILEAGE FACILITY	B&C	IX CATEGORY: MSG	IX CATEGORY: P.L.
		CUSTOMER OPERATIONS EXPENSES																
1	6610	MARKETING	0	A-3,LN 10	0	0	0	0	0	0	0	0	0	0	0		0	0
2		TELEPHONE OPERATOR SERVICES																
3	6621	- CALL COMPLETION INCL DA	0	WS-OPERATORS			0	0									0	
4		- OPERATOR SERVICES UNDER CONTRACT	0	DIRECT			0	0									0	
5	6622	PUBLISHED DIRECTORY LISTINGS	0	DIRECT				0										
6	6623	ALL OTHER																
7	1.0	LOCAL BUSINESS OFFICE																
8		- END USER SVC ORDER PROCESSING																
9		- PRESUBSCRIPTION	0	A-3,LN 20	0	0	0	0	0	0	0							
10		- OTHER	0	AL-1,LN 12									0			0	0	
11		- END USER PAYMENT & COLLECTION	0	AL-1,LN 13		0							0			0	0	
12		- END USER BILLING INQUIRY	0	AL-1,LN 14		0							0			0	0	
13		- IX CARRIER SVC ORDER PROCESSING	0	AL-1,LN 15	0	0	0	0	0	0	0		0			0	0	
14		- IX CARRIER PAYMENT & COLLECTION	90,452	AL-1,LN 16	0	0	59,347	0	31,105	0	0		0			0	0	
15		- IX CARRIER BILLING INQUIRY	0	AL-1,LN 17	0	0	0	0	0	0	0		0			0	0	
16		- COIN COLLECT AND ADMINISTRATION	0	AL-1,LN 18	0	0												
17		SUBTOTAL LOCAL BUSINESS OFFICE	90,452		0	0	59,347	0	31,105	0	0	0	0			0	0	
18	2.0	CUSTOMER SERVICES (REV ACCTG)																
19		- MESSAGE PROCESSING																
20		- TOLL TICKET PROCESSING	0	DIRECT												0		
21		- LOCAL MESSAGE PROCESSING	0	DIRECT												0		
22		- OTHER BILLING & COLLECTION	0	DIRECT												0		
23		- END USER COMMON LINE	0	DIRECT		0												
24		- CARRIER ACCESS BILLING (CABS)	107,561	A-3,LN 22			70,572	0	36,989	0	0	0	0	0	0	0	0	0
25		SUBTOTAL CUSTOMER SERVICES	107,561		0	0	70,572	0	36,989	0	0	0	0	0	0	0	0	0
26		TOTAL CAT 1 AND CAT 2	198,013		0	0	129,918	0	68,094	0	0	0	0	0	0	0	0	0
27		% DISTRIBUTION	100.0000%		0.0000%	0.0000%	65.6112%	0.0000%	34.3888%	0.0000%	0.0000%	0.0000%	0.0000%	0.0000%	0.0000%	0.0000%	0.0000%	0.0000%
28	3.0	ALL OTHER CUSTOMER SERVICE	0	/LN 34	0	0	0	0	0	0	0	0	0	0	0	0	0	0
29		TOTAL SERVICES EXPENSE	198,013		0	0	129,918	0	68,094	0	0	0	0	0	0	0	0	0
30		% DISTRIBUTION	100.0000%		0.0000%	0.0000%	65.6112%	0.0000%	34.3888%	0.0000%	0.0000%	0.0000%	0.0000%	0.0000%	0.0000%	0.0000%	0.0000%	0.0000%
31		TOTAL CUSTOMER OPERATIONS EXPENSE	198,013		0	0	129,918	0	68,094	0	0	0	0	0	0	0	0	0
32		% DISTRIBUTION	100.0000%		0.0000%	0.0000%	65.6112%	0.0000%	34.3888%	0.0000%	0.0000%	0.0000%	0.0000%	0.0000%	0.0000%	0.0000%	0.0000%	0.0000%
33		CUSTOMER OPERATIONS EXCL MARKETING	198,013		0	0	129,918	0	68,094	0	0	0	0	0	0	0	0	0
34		% DISTRIBUTION	100.0000%		0.0000%	0.0000%	65.6112%	0.0000%	34.3888%	0.0000%	0.0000%	0.0000%	0.0000%	0.0000%	0.0000%	0.0000%	0.0000%	0.0000%

PUBLIC VERSION

CORPORATE OPERATIONS EXPENSE ALLOCATION

A-12,1of1

					COMMON LINE		TRAFFIC SENSITIVE					SPECIAL ACCESS						
					LIMITED	COMMON			COMMON TRANSPORT		DEDICATED	NEL TERMINATION		CHANNEL MILEAGE			IX CATEGORY	
LN	A/C	DESCRIPTION	TOTAL COMPANY	SOURCE	PAY	LINE	SWITCHING	INFO	TERM	FACILITY	TRANSPORT	ALLOCATED	TERM	TERM	FACILITY	B&C	MSG	P.L.
		BIG THREE EXPENSES																
1		PLANT SPECIFIC EXPENSE	7,730,181	A-9,LN 25	0	0	550,004	0	288,274	6,891,903	0	0	0	0	0		0	0
2		OTHER PLANT EXPENSE	0	A-10,LN 7	0	0	0	0	0	0	0	0	0	0	0		0	0
3		NETWORK OPERATIONS EXPENSE	405,808	A-10,LN 8	0	0	266,256	0	139,553	0	0	0	0	0	0		0	0
4		ACCESS CHARGE EXPENSE	0	A-10,LN 9													0	0
5		CUSTOMER OPERATIONS EXPENSE	198,013	A-11,LN 31	0	0	129,918	0	68,094	0	0	0	0	0	0	0	0	0
6		TOTAL BIG THREE EXPENSES	8,334,002		0	0	946,178	0	495,920	6,891,903	0	0	0	0	0	0	0	0
7		% DISTRIBUTION	100.0000%		0.0000%	0.0000%	11.3532%	0.0000%	5.9506%	82.6962%	0.0000%	0.0000%	0.0000%	0.0000%	0.0000%	0.0000%	0.0000%	0.0000%
		CORPORATE OPERATING EXPENSE																
8	6710	EXECUTIVE AND PLANNING	173,571	LN 7	0	0	19,706	0	10,328	143,537	0	0	0	0	0	0	0	0
9	6720	GENERAL AND ADMINISTRATIVE	554,219	LN 7	0	0	62,922	0	32,979	458,318	0	0	0	0	0	0	0	0
10		TOTAL CORPORATE OPERATIONS	727,790		0	0	82,628	0	43,308	601,855	0	0	0	0	0	0	0	0
11		% DISTRIBUTION	100.0000%		0.0000%	0.0000%	11.3532%	0.0000%	5.9506%	82.6962%	0.0000%	0.0000%	0.0000%	0.0000%	0.0000%	0.0000%	0.0000%	0.0000%
12		EQUAL ACCESS EXPENSE	0	DIRECT			0											
13	7500	INTEREST EXPENSE																
14		CAPITAL LEASE	0	A-3,LN 10	0	0	0	0	0	0	0	0	0	0	0	0	0	0
15		OTHER	16,378	A-3,LN 10	0	0	10,746	0	5,632	0	0	0	0	0	0	0	0	0
16		TOTAL	16,378		0	0	10,746	0	5,632	0	0	0	0	0	0	0	0	0
17		OTHER INCOME ADJUSTMENTS																
18		BASED ON PLANT	0	A-2,LN 10	0	0	0	0	0	0	0	0	0	0	0	0	0	0
19		BASED ON EXPENSE	0	LN 7	0	0	0	0	0	0	0	0	0	0	0	0	0	0
20		TOTAL	0		0	0	0	0	0	0	0	0	0	0	0	0	0	0
21		OPERATING TAXES																
22	7210	FEDERAL ITC AMORTIZATION	0	A-3,LN 10	0	0	0	0	0	0	0	0	0	0	0	0	0	0
23	7210	STATE ITC AMORTIZATION	0	A-3,LN 10	0	0	0	0	0	0	0	0	0	0	0	0	0	0
24	7240	OTHER OPERATING TAXES	61,623	A-3,LN 10	0	0	40,432	0	21,191	0	0	0	0	0	0	0	0	0
25		TOTAL OPERATING TAXES	61,623		0	0	40,432	0	21,191	0	0	0	0	0	0	0	0	0

PUBLIC VERSION

DEVELOPMENT OF JOINT USE FACILITIES ALLOCATION FACTORS

AL-1,1of1

					COMMON LINE		TRAFFIC SENSITIVE					SPECIAL ACCESS						
									COMMON TRANSPORT		DEDICATED	NEL TERMINATION		CHANNEL MILEAGE			IX CATEGORY	
LN	A/C	DESCRIPTION	TOTAL COMPANY	SOURCE	LIMITED PAY	COMMON LINE	SWITCHING	INFO	TERM	FACILITY	TRANSPORT	ALLOCATED	TERM	TERM	FACILITY	B&C	MSG	P.L.
1		EQUIVALENT ACCESS LINES - MSG COE	0		0	0						0						
2		% DISTRIBUTION	0.0000%		0.0000%	0.0000%						0.0000%						
3		EQUIVALENT ACCESS LINES - MSG CWF	0		0	0						0						
4		% DISTRIBUTION	0.0000%		0.0000%	0.0000%						0.0000%						
5		IX CIRCUIT TERMINATIONS - MSG COE	888						888		0							
6		% DISTRIBUTION	100.0000%						100.0000%		0.0000%							
7		IX CIRCUIT MILES - MSG CWF	6,745,659							6745659.00	0.00							
8		% DISTRIBUTION	100.0000%							100.0000%	0.0000%							
		DISTRIBUTION FACTORS																
9		STD WORK SECONDS - MANUAL BOARDS	100.0000%				0.0000%	0.0000%									100.0000%	
10		STD WORK SECONDS - TSPS	100.0000%				0.0000%	0.0000%									100.0000%	
11		STD WORK SECONDS - OPERATORS	100.0000%				0.0000%	0.0000%									100.0000%	
12		END USER SVC ORDER CONTACTS	0.0000%										0.0000%			0.0000%	0.0000%	
13		END USER PAYMENT & COLLECTION	0.0000%			0.0000%							0.0000%			0.0000%	0.0000%	
14		END USER BILLING INQUIRY CONTACTS	0.0000%			0.0000%							0.0000%			0.0000%	0.0000%	
15		IX CARRIER SVC ORDER CONTACTS	100.0000%		0.0000%	0.0000%	65.6112%	0.0000%	34.3888%	0.0000%	0.0000%		0.0000%			0.0000%		
16		IX CARRIER PAYMENT & COLLECTION	100.0000%		0.0000%	0.0000%	65.6112%	0.0000%	34.3888%	0.0000%	0.0000%		0.0000%			0.0000%		
17		IX CARRIER BILLING INQUIRY CONTACTS	100.0000%		0.0000%	0.0000%	65.6112%	0.0000%	34.3888%	0.0000%	0.0000%		0.0000%			0.0000%		
18		PUBLIC TELEPHONE REVENUE	0.0000%		0.0000%	0.0000%												
19		END USER BILLING & COLLECTION	0.0000%													0.0000%		
20		OPERATOR SERVICES UNDER CONTRACT	0.0000%				0.0000%	0.0000%									0.0000%	

PUBLIC VERSION

REVENUE REQUIREMENT SUMMARY

LN	ALLOCATION RATIOS		TOTAL COMPANY	ALLOCATION BASIS	INTERSTATE MSG TOLL INTRALATA	INTERSTATE MSG TOLL INTERLATA	OTHER
	REVENUE REQUIREMENT SUMMARY						
1	NET INVESTMENT FOR SETTLEMENTS		10,108,844	NOTE A	125,759	3,971,629	6,011,455
2	RATE OF RETURN				11.2500%	11.2500%	11.2500%
3	RETURN ON INVESTMENT		1,043,862	LN1*LN 2	14,148	446,808	582,906
4	ALLOWANCE FOR FUNDS USED DURING CONSTR		0	S-8,LN 29	0	-	0
5	NET RETURN FOR SETTLEMENTS		1,043,862	LN3-LN4	14,148	446,808	582,906
6	TOTAL ITC AMORTIZATION		0	S-12,LN 28+29	0	-	0
7	FEDERAL OPERATING INCOME TAX	(ACTUAL)	0	S-12,LN 30	0	-	0
8	FEDERAL OPERATING INCOME TAX	(OPTION)	517,027	LN28-LN11	7,030	221,995	288,003
9	STATE AND LOCAL INCOME TAX	(ACTUAL)	0	S-12,LN 31	0	-	0
10	STATE AND LOCAL INCOME TAX	(OPTION)	172,112	LN 33	2,340	73,899	95,873
11	PROVISION FOR DEFERRED INCOME TAX		0	S-12,LN 33	0	-	0
13	OPERATING EXPENSE AND TAX		26,053,818	S-8,LN 18	318,351	9,926,567	15,808,899
14	NONOPERATING EXPENSE		3,827	S-8,LN 23	47	1,449	2,332
15	UNCOLLECTIBLES		284,299	S-8,LN 28	2,441	77,252	204,606
16	BASIS FOR GROSS RECEIPTS TAX		28,074,946		344,357	10,747,971	16,982,618
17	GROSS RECEIPTS TAX RATE	(GROSS UP)			0.0000%	0.0000%	0.0000%
18	GROSS RECEIPTS TAX		0		0	-	0
19	TOTAL REVENUE REQUIREMENT		28,074,946		344,357	10,747,971	16,982,618

NOTE A: INCLUDES NET TEL PLANT FROM SCH S-2,LN 33 LESS A/C's 2004 ,2006 ,2007 AND 1402 OTHER THAN RTB STOCK.

******* **** ********** ********** ********** ********** ********** ********** ********** ********** **********

	OPTIONAL GROSS UP INCOME TAX CALCULATION						
20	RETURN ON INVESTMENT		1,043,862	LN 3	14,148	446,808	582,906
21	INTEREST AND RELATED ITEMS		40,221	S-12,LN 19	502	15,877	23,842
22	OTHER INCOME ADJUSTMENTS		0	S-12,LN 24+25	-	-	0
23	TOTAL INCOME ADJUSTMENTS		40,221	LN 21+22	502	15,877	23,842
24	FEDERAL ITC AMORTIZATION		0	S-12,LN 28	-	-	0
25	FEDERAL TAXABLE INCOME		1,520,669		20,676	652,927	847,066
26	FEDERAL INCOME TAX @	34.00%	517,027	LN 25*FIT	7,030	221,995	288,003
27	FEDERAL SURTAX ALLOCATION		0	S-2,LN 34	-	-	0
28	NET FEDERAL INCOME TAX BEFORE ITC		517,027	LN26-LN27	7,030	221,995	288,003
29	STATE ITC AMORTIZATION		0	S-12,LN 29	-	-	0
30	STATE TAXABLE INCOME		1,434,267		19,501	615,829	798,938
31	STATE INCOME TAX @	12.00%	172,112	LN 30*SIT	2,340	73,899	95,873
32	STATE SURTAX EXEMPTION		0	S-2,LN 34	-	-	0
33	NET STATE INCOME TAX BEFORE ITC		172,112		2,340	73,899	95,873

PUBLIC VERSION

S-2,1of1

SUMMARY OF NET TELEPHONE PLANT, M&S AND WORKING CAPITAL

S-2,1of1

LN	ALLOCATION RATIOS		TOTAL COMPANY	ALLOCATION BASIS	INTERSTATE MSG TOLL INTRALATA	INTERSTATE MSG TOLL INTERLATA	OTHER
	NET INVESTMENT SUMMARY						
1	GENERAL SUPPORT FACILITIES	2110	5,077,383	S-3,LN 10	63,340	2,004,236	3,009,807
2	CENTRAL OFFICE SWITCHING EQUIPMEN	2210	28,797,988	S-4,LN 52	359,255	11,367,660	17,071,073
3	OPERATOR SYSTEMS EQUIPMENT	2220	0	S-4,LN 41	-	-	0
4	CENTRAL OFFICE TRANSMISSION EQUIP	2230	0	S-4,LN 78	0	0	0
5	INFORMATION ORIG/TERM EQUIPMENT	2310	0	S-5,LN 17	-	-	0
6	CABLE AND WIRE FACILITIES	2410	0	S-5,LN 42	0	0	0
7	TANGIBLE ASSETS	2680	650,497	S-3,LN 29	8,115	256,776	385,606
8	INTANGIBLE ASSETS	2690	292,446	S-3,LN 36	3,648	115,440	173,358
9	TOTAL PLANT IN SERVICE A/C 2001		34,818,315		434,359	13,744,111	20,639,844
10	% DISTRIBUTION		100.0000%		1.2475%	39.4738%	59.2787%
11	PROPERTY HELD FOR FUTURE USE	2002	0	S-6,LN 9	-	-	0
12	PLANT UNDER CONSTR - SHORT TERM	2003	0	S-6,LN 15	-	-	0
13	PLANT UNDER CONSTR - LONG TERM	2004	0	S-6,LN 21	-	-	0
14	TELEPHONE PLANT ADJUSTMENT	2005	0	S-6,LN 27	-	-	0
15	NONOPERATING PLANT	2006	0	DIRECT			0
16	GOODWILL	2007	0	DIRECT			0
17	TOTAL PROPERTY, PLANT & EQUIPMENT		34,818,315		434,359	13,744,111	20,639,844
18	% DISTRIBUTION		100.0000%		1.2475%	39.4738%	59.2787%
19	ACCUM DEPRECIATION - PLANT IN SERV	3100	20,865,308	S-7,LN 18	260,295	8,236,330	12,368,683
20	ACCUM DEPRECIATION - FUTURE USE	3200	0	S-7,LN 19	-	-	0
21	ACCUM AMORTIZATION - TANGIBLE PRO	3400	593,968	S-7,LN 23	7,410	234,462	352,096
22	ACCUM AMORTIZATION - INTANGIBLE PR	3500	292,446	S-7,LN 24	3,648	115,440	173,358
23	ACCUM AMORTIZATION - TEL PLANT ADJ	3600	0	S-7,LN 25	-	-	0
24	OPERATING DEFERRED INCOME TAX - N	VAR	4,118,320	S-7,LN 32	51,376	1,625,657	2,441,287
25	OTHER DEFERRED CREDITS - NET	4360	0	S-7,LN 38	-	-	0
26	NET TELEPHONE PLANT		8,948,273		111,630	3,532,223	5,304,420
27	% DISTRIBUTION		100.0000%		1.2475%	39.4738%	59.2787%
28	MATERIALS AND SUPPLIES	1220	0	S-6,LN 31	0	0	0
29	INVESTMENT IN NONAFFILIATED CO'S	1402	0	S-6,LN 35	-	-	0
30	EQUAL ACCESS EQUIPMENT	1439	0	S-6,LN 36	-	-	0
31	OTHER JURISDICTIONAL ASSETS	1500	0	S-6,LN 37	-	-	0
32	CASH WORKING CAPITAL	XXXX	1,160,571	S-3,LN 3	14,129	439,406	707,035
33	NET TEL PLANT, M&S AND CASH WORKING CAPITAL		10,108,844		125,759	3,971,629	6,011,455
34	% DISTRIBUTION		100.0000%		1.2441%	39.2887%	59.4673%

PUBLIC VERSION

SUMMARY OF OPERATING EXPENSE AND TAX

S-8,1of1

LN	ALLOCATION RATIOS		TOTAL COMPANY	ALLOCATION BASIS	INTERSTATE MSG TOLL INTRALATA	INTERSTATE MSG TOLL INTERLATA	OTHER
	OPERATING EXPENSE AND TAX SUMMARY						
1	NETWORK SUPPORT EXPENSE	6110	0	S-9,LN 7	0	0	0
2	GENERAL SUPPORT EXPENSE	6120	956,591	S-9,LN 8	11,933	377,603	567,055
3	CENTRAL OFFICE EXPENSE	6210	1,101,982	S-9,LN 15	13,747	434,994	653,241
4	INFORMATION ORIG/TERM EXPENSE	6310	0	S-9,LN 21	0	0	0
5	CABLE AND WIRE FACILITIES EXPENSE	6410	17,693,096	S-9,LN 25	215,254	6,676,649	10,801,193
6	OTHER PLANT EXPENSE	6510	0	S-10,LN 11	0	0	0
7	NETWORK OPERATIONS EXPENSE	6530	996,551	S-10,LN 13	12,432	393,376	590,742
8	ACCESS CHARGE EXPENSE	6540	0	S-10,LN 14	0	0	0
9	MARKETING EXPENSE	6610	0	S-11,LN 13	0	0	0
10	SERVICES EXPENSE	6620	537,801	S-11,LN 44	6,066	191,947	339,788
11	EXECUTIVE AND PLANNING EXPENSE	6710	444,159	S-12,LN 8+9	5,407	168,164	270,587
12	GENERAL AND ADMINISTRATIVE EXPENS	6720	1,418,214	S-12,LN 11+12	17,266	536,953	863,995
13	SUBTOTAL OPERATING EXPENSES		23,148,393		282,106	8,779,686	14,086,602
14	% DISTRIBUTION		100.0000%		1.2187%	37.9278%	60.8535%
15	DEPRECIATION AND AMORTIZATION	6560	2,754,096	S-10,LN 22+29	34,357	1,087,146	1,632,592
16	OTHER OPERATING TAX	7240	151,329	S-12,LN 32	1,888	59,735	89,706
17	EQUAL ACCESS EXPENSE		0	S-12,LN 15	0	0	0
18	TOTAL OPERATING EXPENSE AND TAX		26,053,818		318,351	9,926,567	15,808,899
19	% DISTRIBUTION		100.0000%		1.2219%	38.1002%	60.6779%
	NON OPERATING EXPENSE	7370					
20	ABANDONED CONSTRUCTION		0	S-2,LN 10	0	0	0
21	CONTRIBUTIONS		3,827	S-12,LN 14	47	1,449	2,332
22	OTHER NON OPERATING EXPENSE		0	DIRECT			0
23	TOTAL NON OPERATING EXPENSE		3,827		47	1,449	2,332
24	% DISTRIBUTION		100.0000%		1.2174%	37.8612%	60.9214%
	UNCOLLECTIBLES						
25	END USER MSG TOLLS	5310	0	DIRECT	0	0	0
26	END USER COMMON LINE	5320	0	DIRECT	0	0	0
27	IX CARRIER	5330	284,299	S-11,LN 5	2,441	77,252	204,606
28	TOTAL UNCOLLECTIBLES		284,299		2,441	77,252	204,606
29	ALLOWANCE FOR FUNDS USED DURING (	7340	0	S-12,LN 3	0	0	0

PUBLIC VERSION

REVENUE REQUIREMENT SUMMARY

S-1,1of1

LN	DESCRIPTION	A/C	CAT	TOTAL COMPANY	ALLOCATION BASIS	ACCESS DIVISION	OTHER
	REVENUE REQUIREMENT SUMMARY						
1	NET INVESTMENT FOR SETTLEMENTS			42,474,018	NOTE A	10,108,844	32,365,174
2	RATE OF RETURN					0	0
3	RETURN ON INVESTMENT			4,167,502	LN1*LN 2	1,043,862	3,123,640
4	ALLOWANCE FOR FUNDS USED DURING CONSTR			-	S-8,LN 30	-	-
5	NET RETURN FOR SETTLEMENTS			4,167,502	LN 3-LN 4	1,043,862	3,123,640
6	TOTAL ITC AMORTIZATION			-	S-12,LN 32	-	-
7	FEDERAL OPERATING INCOME TAX		(ACTUAL)	-		-	-
8	FEDERAL OPERATING INCOME TAX		(OPTION)	1,856,619	LN28-LN11	517,027	1,339,591
9	STATE AND LOCAL INCOME TAX		(ACTUAL)	-		-	-
10	STATE AND LOCAL INCOME TAX		(OPTION)	618,046	LN 32	172,112	445,933
11	PROVISION FOR DEFERRED INCOME TAX			-	S-12,LN 36	-	-
13	OPERATING EXPENSE AND TAX			87,519,255	S-8,LN 20	26,053,818	61,465,437
14	NONOPERATING EXPENSE			176,817	S-8,LN 25	3,827	172,990
15	UNCOLLECTIBLES			377,354	S-8,LN 29	284,299	93,055
16	BASIS FOR GROSS RECEIPTS TAX			94,715,593		28,074,945	66,640,647
17	GROSS RECEIPTS TAX RATE		(GROSS UP)			-	-
18	GROSS RECEIPTS TAX			-		-	-
19	TOTAL REVENUE REQUIREMENT			94,715,593		28,074,945	66,640,647

NOTE A: INCLUDES NET TEL PLANT FROM SCH S-2,LN 33 LESS A/C's 2004 ,2006 ,2007 AND 1402.

	OPTIONAL GROSS UP INCOME TAX CALCULATION						
20	RETURN ON INVESTMENT			4,167,502	LN 3	1,043,862	1,043,862
21	INTEREST AND RELATED ITEMS			563,478	S-12,LN 22	40,221	40,221
22	OTHER INCOME ADJUSTMENTS			-	S-12,LN 27+28	-	-
23	TOTAL INCOME ADJUSTMENTS			563,478	LN 21+22	40,221	40,221
24	FEDERAL ITC AMORTIZATION			-	S-12,LN 32	-	-
25	FEDERAL TAXABLE INCOME			5,460,643		1,520,668	1,520,668
26	FEDERAL INCOME TAX	@	34%	1,856,619	LN 25*FIT	517,027	517,027
27	FEDERAL SURTAX ALLOCATION			-	S-2,LN 32	-	-
28	NET FEDERAL INCOME TAX BEFORE ITC			1,856,619	LN26-LN27	517,027	517,027
29	STATE TAXABLE INCOME			5,150,379		1,434,267	1,434,267
30	STATE INCOME TAX	@	12%	618,046	LN 29*SIT	172,112	172,112
31	STATE SURTAX EXEMPTION			-	S-2,LN 32	-	-
32	NET STATE INCOME TAX BEFORE ITC			618,046	LN30-LN31	172,112	172,112

PUBLIC VERSION

S-2,1of1

SUMMARY OF NET TELEPHONE PLANT, M&S AND WORKING CAPITAL

S-2,1of1

LN	DESCRIPTION	A/C	CAT	TOTAL COMPANY	ALLOCATION BASIS	ACCESS DIVISION	OTHER
	NET INVESTMENT SUMMARY						
1	GENERAL SUPPORT FACILITIES	2110		15,656,955	S-3,LN 27	5,077,383	10,579,572
2	CENTRAL OFFICE SWITCHING EQUIPMEN	2210		46,821,529	S-4,LN 17	28,797,988	18,023,541
3	CENTRAL OFFICE TRANSMISSION EQUIP	2230		47,974,761	S-4,LN 31	0	47,974,761
4	CABLE AND WIRE FACILITIES	2410		21,721,264	S-5,LN 16	0	21,721,264
5	TANGIBLE ASSETS	2680		2,005,915	S-3,LN 54	650,497	1,355,418
6	INTANGIBLE ASSETS	2690		1,136,555	S-3,LN 61	292,446	844,109
7	TOTAL PLANT IN SERVICE A/C 2001			135,316,979		34,818,315	100,498,664
8	% DISTRIBUTION			100.0000%		25.7309%	74.2691%
9	PROPERTY HELD FOR FUTURE USE	2002		0	S-6,LN 9	0	0
10	PLANT UNDER CONSTR - SHORT TERM	2003		0	S-6,LN 15	0	0
11	PLANT UNDER CONSTR - LONG TERM	2004		0	S-6,LN 21	0	0
12	TELEPHONE PLANT ADJUSTMENT	2005		0	S-6,LN 27	0	0
13	NONOPERATING PLANT	2006		1,777,940	DIRECT		1,777,940
14	GOODWILL	2007		0	DIRECT		0
15	TOTAL PROPERTY, PLANT & EQUIPMENT			137,094,919		34,818,315	102,276,604
16	% DISTRIBUTION			100.0000%		25.3972%	74.6028%
17	ACCUM DEPRECIATION - PLANT IN SERV	3100		78,801,270	S-7,LN 30	20,865,308	57,935,962
18	ACCUM DEPRECIATION - FUTURE USE	3200		0	S-7,LN 31	0	0
19	ACCUM AMORTIZATION - TANGIBLE PRO	3400		1,831,598	S-7,LN 36	593,968	1,237,630
20	ACCUM AMORTIZATION - INTANGIBLE PR	3500		1,136,555	S-7,LN 37	292,446	844,109
21	ACCUM AMORTIZATION - TEL PLANT ADJ	3600		0	S-7,LN 38	0	0
22	OPERATING DEFERRED INCOME TAX - NI	VAR		16,068,811	S-7,LN 44	4,118,320	11,950,491
23	OTHER DEFERRED CREDITS - NET	4360		0	S-7,LN 49	0	0
24	NET TELEPHONE PLANT			39,256,685		8,948,273	30,308,412
25	% DISTRIBUTION			100.0000%		22.7943%	77.2057%
26	MATERIALS AND SUPPLIES	1220		1,296,273	S-6,LN 32	0	1,296,273
27	PREPAID EXPENSES	1300		0	S-6,LN 37	0	0
28	INVESTMENT IN NONAFFILIATED CO'S	1402		89,144,404	S-6,LN 38	0	89,144,404
29	OTHER JURISDICTIONAL ASSETS	1500		0	S-6,LN 39	0	0
30	CASH WORKING CAPITAL	XXXX		3,699,000	COMPUTED	1,160,571	2,538,429
31	NET TEL PLANT, M&S AND CASH WORKING CAPITAL			133,396,362		10,108,844	123,287,518
32	% DISTRIBUTION			100.0000%		7.5781%	92.4219%

PUBLIC VERSION

SUMMARY OF OPERATING EXPENSE AND TAX

S-8,1of1

LN	DESCRIPTION	A/C	CAT	TOTAL COMPANY	ALLOCATION BASIS	ACCESS DIVISION	OTHER
	OPERATING EXPENSE AND TAX SUMMARY						
1	NETWORK SUPPORT EXPENSE	6110		281,062	S-9,LN 13-23	92,851	188,211
2	GENERAL SUPPORT EXPENSE	6120		2,405,407	S-9,LN 24-27	863,740	1,541,667
3	CENTRAL OFFICE EXPENSE	6210		3,474,984	S-9,LN 33	1,101,982	2,373,002
4	CABLE AND WIRE FACILITIES EXPENSE	6410		39,072,861	S-9,LN 35	17,693,096	21,379,765
5	OTHER PLANT EXPENSE	6510		75,110	S-10,LN 6	0	75,110
6	NETWORK OPERATIONS EXPENSE	6530		4,214,236	S-10,LN 13	996,551	3,217,685
7	ACCESS CHARGE EXPENSE	6540		16,628,213	S-10,LN 15	0	16,628,213
8	MARKETING EXPENSE	6610		2,431,607	S-11,LN 15	0	2,431,607
9	SERVICES EXPENSE	6620		3,616,755	S-11,LN 39	537,801	3,078,954
10	EXECUTIVE AND PLANNING EXPENSE	6710		1,186,642	S-12,LN 7	444,159	742,483
11	GENERAL AND ADMINISTRATIVE EXPENS	6720		3,503,678	S-12,LN 8-15	1,418,214	2,085,464
12	SUBTOTAL OPERATING EXPENSES			76,890,555		23,148,393	53,742,162
13	% DISTRIBUTION			100.0000%		30.1056%	69.8944%
14	DEPRECIATION - PLANT IN SERVICE	6561		9,873,487	S-10,LN 33	2,699,909	7,173,578
15	DEPRECIATION - FUTURE USE	6562		0	S-10,LN 34	0	0
16	AMORTIZATION - TANGIBLES	6563		167,093	S-3,LN42-44	54,186	112,907
17	AMORTIZATION - INTANGIBLES	6564		0	S-3,LN 45	0	0
18	AMORTIZATION - OTHER	6565		0	S-3,LN 46	0	0
19	OTHER OPERATING TAX	7240		588,120	S-12,LN 35	151,329	436,791
20	TOTAL OPERATING EXPENSE AND TAX			87,519,255		26,053,818	61,465,437
21	% DISTRIBUTION			100.0000%		29.7692%	70.2308%
	NON OPERATING EXPENSE	7370					
22	ABANDONED CONSTRUCTION			0	S-2,LN 8	0	0
23	CONTRIBUTIONS			10,000	S-12,LN 2	3,827	6,173
24	ALL OTHER			166,817	S-12,LN 2	0	166,817
25	TOTAL NON OPERATING EXPENSE			176,817		3,827	172,990
26	% DISTRIBUTION			100.0000%		2.1645%	97.8355%
	UNCOLLECTIBLES						
27	END USER MSG TOLLS	5310		27,588	DIRECT	XXX	XXX
28	IX CARRIER	5330		349,766	DIRECT	284,299	65,467
29	TOTAL UNCOLLECTIBLES			377,354		284,299	93,055
30	ALLOWANCE FOR FUNDS USED DURING (	7340		0	S-12,LN 4	0	0

Exhibit 17

INS 2008 Tariff Filing
(filed June 24, 2008)

PUBLIC VERSION

VENABLE® LLP

Filed Pursuant to
§ 204(a)(3) of the
Communications Act
on 7 Days' Notice

June 24, 2008

Marlene H. Dortch
Office of the Secretary
Federal Communications Commission
445 Twelfth Street, S.W.
Washington, D.C. 20554

Attention: Wireline Competition Bureau

Transmittal No. 26

FRN: 0002-5807-10
Iowa Network Services, Inc.

FRN: 0011-5755-03
Venable LLP

Dear Ms. Dortch:

The accompanying 2008 Annual Access Tariff Filing of Iowa Network Services, Inc. ("INS"), effective July 1, 2008, is sent to you for filing in compliance with the requirements of the Communications Act of 1934, as amended. This tariff filing consists of the following Check Sheets:

Tariff F.C.C. No.	Check Sheet Revision No.
1	22nd Revised Page 1
	8th Revised Page 1.1

This 2008 Annual Access Tariff Filing is filed in accordance with the procedures set forth in *July 1, 2008 Annual Access Charge Tariff Filings, Order*, 23 FCC Rcd 5235 (2008) (the "*Tariff Order*") and includes cost support required by *Material to be Filed in Support of 2008 Annual Access Tariff Filings, Tariff Review Plans*, 23 FCC Rcd 5240 (2008). Pursuant to the attached study for the test period ending June 30, 2009, INS is reducing its switched transport rate.

VENABLE® LLP

As required by the *Tariff Order*, INS is submitting its 2008 Annual Tariff Review Plan and associated tariff changes electronically, using the Commission's Electronic Tariff Filing System ("ETFS"). The statutory processing fee in the amount of $775.00 is being delivered via overnight mail to the Federal Communications Commission (Tariff Filings, P.O. Box 979091, St. Louis, MO 63197-9000) along with the original transmittal letter and FCC Form 159.

Acknowledgement and date of receipt of this filing is requested. A duplicate copy of this letter is provided for this purpose.

Should you have any questions concerning this matter, please contact James U. Troup at (202) 344-8066.

Sincerely,

James U. Troup

Counsel for
Iowa Network Services, Inc.

Attachments

PUBLIC VERSION

IOWA NETWORK SERVICES, INC.

IOWA NETWORK ACCESS DIVISION

DESCRIPTION AND JUSTIFICATION

COST SUPPORT MATERIAL

TARIFF REVIEW PLAN

JULY 1, 2008 ANNUAL ACCESS CHARGE TARIFF FILING

JUNE 24, 2008

PUBLIC VERSION

IOWA NETWORK ACCESS DIVISION

INTERSTATE ACCESS TARIFF FILING

PROSPECTIVE PERIOD
JULY 1, 2008 - JUNE 30, 2009

INDEX

Section	Description
	Transmittal Letter
1	Introduction, Overview and Rate Development
2	Development of Switched Transport Charge and Study Period Projected Access Minutes
3	Projected Revenue Requirement Summary - Total Interstate (Part 69)
4	Projected Part 36 Revenue Requirement Summary
5	Projected Part 64 Revenue Requirement Summary
6	Tariff Review Plan (TRP)

IOWA NETWORK ACCESS DIVISION

INTRODUCTION, OVERVIEW AND RATE DEVELOPMENT

INTRODUCTION

This filing supports revisions to Iowa Network Access Division Tariff F.C.C. No. 1 in accordance with the Federal Communications Commission's (FCC) Order, In the Matter of July 1, 2008 Annual Access Charge Tariff Filings, Order, 23 FCC Rcd 5235 (released March 28, 2008). This Order establishes procedures for the 2008 filing of annual access charge tariffs and Tariff Review Plans (TRPs). The requirements for summary cost support material to support the annual access charge filings to be submitted on or before June 24, 2008 are presented in the Commission's Order, In the Matter of Material to be Filed in Support of 2008 Annual Access Tariff Filings, Tariff Review Plans, 23 FCC Rcd 5240 (released March 28, 2008).

This 2008 Annual Access Charge Tariff Filing covers the scheduled effective period from July 1, 2008 through June 30, 2010. This documentation volume contains the introduction, overview, rate development narrative, access rate development and corresponding cost support material to be filed with the FCC on June 24, 2008.

OVERVIEW

Schedule A of Section 2 presents a summary of the proposed rate to be effective July 1, 2008. Iowa Network Access Division ("INAD") proposes to implement a switched transport rate of $0.00819 effective July 1, 2008 representing a reduction of $0.00036 from its existing switched transport rate. The Company's proposed switched transport rate of $0.00819 per access minute is projected to generate switched transport revenues of $19,214,471 and total revenues of $19,258,225 resulting in a return of 11.13% on interstate investments for the projected twelve-month period ending June 30, 2009.

For the year 2007, INAD's interstate access revenues amounted to $15,268,080 which resulted in a negative return of 5.71% on its interstate investment. For the 2005/2006 monitoring period, INAD experienced a return of 38.63%. During this period, the FCC authorized a maximum rate of return for interstate access operations of 11.50% with a target of 11.25%.

Interstate access minutes grew at a rate of 17.47% during 2007 to 1,844,725,157 from 1,570,363,583 in 2006. During the year 2006, INAD recorded interstate traffic growth of 64.56% over the year 2005. For the test period ending June 30, 2009, INAD is projecting interstate access minutes of 2,346,089,248, representing an increase of 26.86% over projected access minutes of 1,849,414,135 for the projected period ending June 30, 2008 and an increase of 27.18% compared with actual interstate access minutes for the year 2007. The higher than normal increase in interstate traffic for the projected test period results primarily from more

accurately classifying the jurisdiction of both call aggregator traffic[1] and Percent Interstate Use ("PIU") adjustments during the year 2008 based on new traffic recording equipment and procedures implemented by INAD.

Since 2000, INAD has been implementing planned stages of a network modernization program that provides full redundancy and protection for its equal access network to interexchange carriers serving rural Iowa. During the years 2003 and 2004, INAD completed upgrades to its fiber ring network that connects all major traffic routes throughout Iowa and expanded the capacity of its existing equal access switches to handle greater peak traffic loads. During 2004, INAD updated its equal access switch to comply with the FCC's requirements for Local Number Portability (LNP). During 2005, INAD installed significant modifications to its accounting and billing applications and its computer systems and software for improved network monitoring and security. During the years 2006 and 2007, INAD added additional investments of approximately $16 million to upgrade its equal access switching and network capabilities system wide and another $5 million is budgeted for 2008. To date, INAD's efforts to operate and maintain its centralized equal access network more efficiently combined with increases in interstate access minutes have enabled INAD to lower its existing centralized equal access rate, while enhancing its services provided to customers.

INAD's proposed tariff rate of $0.00819 is targeted to generate a return of 11.13% on investment for the projected test period ended June 30, 2009. INAD's cost support material has been developed using procedures prescribed by the Federal Communications Commission as follows:

A) Financial reporting is in accordance with the Uniform Systems of Accounts and Financial Reporting Requirements of Class A and Class B Telephone Companies, CC Docket 78-196 (Part 32 Order) and all subsequent revisions to the rules adopted through the period June 15, 2008.

B) Jurisdictional allocation is in accordance with Federal Communications Commission's Rules adopted in CC Docket Nos. 78-72, 80-286, 86-297 and FCC Docket 87-134 released August 18, 1987 (Part 36 Order) and all subsequent revisions to the rules adopted through the period June 15, 2008.

C) Access rate development is performed in accordance with CC Docket No. 87-113 released August 18, 1987 (Part 69 Conformance Notice) and subsequent modifications including CC Docket No. 00-256, Second Report and Order and Notice of Proposed Rulemaking, 16 FCC Rcd 19613 (2001), ("Rate-of-Return Access Charge Reform Order".

The proposed access service tariff maintains the method of charging for interstate access by major rate element. INAD proposes to reduce its current centralized equal access switched

[1] The term call aggregator refers to businesses that generate high-volume traffic, such as conference call companies, chat line providers, and fax broadcasters.

transport rate from $0.00855 to $0.00819 which INAD currently anticipates will remain in effect through June 30, 2010.

RATE DEVELOPMENT

Development of cost support as contained in the tariff filing was accomplished as follows:

1) Projection of test period investment, revenue and expense was determined based on the best estimates of management using fixed, known and measurable amounts from INAD's 2008 and 2009 operating budgets. Anticipated changes in investments and reserves were reflected in conjunction with INAD's ongoing construction and modernization programs. Revenues were increased to reflect the projected increase in access minutes during the test period over the year 2007.

2) Projection of the test period INAD revenue requirement was accomplished using FCC Part 64 cost allocation procedures applied to total company projected investment and expense amounts determined in (1) above. INAD's revenue requirement summary data is contained in Section 5 of the cost support material.

3) Projection of the test period interstate access revenue requirement was accomplished using Parts 36/69 separation procedures applied to projected total INAD investment and expense amounts determined in (2) above. The summary Part 36 and Part 69 revenue requirements are contained in Sections 3 and 4 of the cost support material.

4) Projected interstate access minutes for the period ending June 30, 2008 represent a .25% increase over interstate access minutes for the historical period January 1, 2007 through December 31, 2007. Interstate access minutes for the period ending June 30, 2009 are projected to be 2,346,089,248 compared to 1,849,414,135 for the projected period ending June 30, 2008 and 1,844,725,157 for the actual period ended December 31, 2007. Projected access minutes for the test period ending June 30, 2009 are presented on Schedule B following. The significant increase in test period projected interstate access minutes results primarily from a change in INAD's procedures for assignment of jurisdiction to interexchange traffic resulting from changes in INAD's traffic measurement procedures implemented in 2008[2] and from a similar change in the development of the PIU factor. For the test period ending June 30, 2009, INAD projects 1.6 billion terminating

[2] During 2007, INS acquired, developed and tested processes and procedures to identify the jurisdiction of traffic terminating to the subtending LECs. The new methodology utilizes the actual called and callingparty information provided on each call record to establish call jurisdiction. The result is that more calls are now identified as interstate than by using PIU factors provided by the interexchange carriers or in their absence, PIU factors calculated by INS. Projection of access minutes for the period from July 1, 2008 through June 30, 2009 was accomplished by applying a reasonable growth rate to the total traffic and applying an interstate factor based on the results of INAD's new traffic recording procedures. The new interstate factor is computed to be approximately 78% versus with the old factors of 48% for 2007 and 42% for 2006.

conference call minutes generated by call aggregators of which 78% is projected to represent interstate calling versus 48% in 2007. Without this additional interstate call aggregator traffic, the increase in interstate access minutes projected for the test period ending June 30, 2009 would have been consistent with prior years. Other access generating traffic is currently declining and is expected to continue declining slightly during the test period ending June 30, 2009.

5) INAD's interstate access revenue requirement determined in (3) above for the projected period ending June 30, 2009 amounts to $19,270,037 and is presented in Section 3 of the cost support material. The interstate revenue requirement was reduced by the amount of projected interstate revenues from nonrecurring charges to arrive at the amount of $19,226,283 representing the revenue requirement to be generated from the recurring centralized equal access switched transport rate.

6) The projected switched transport charge was determined by dividing the remaining interstate revenue requirement of $19,226,283 determined in (5) above by projected access minutes of 2,346,089,248 determined in (4) above resulting in a cost of $0.00819 per access minute. An analysis of the development of the interstate switched transport rate is presented on Schedule A in Section 2.

SUMMARY

The 2008 annual access tariff filing is supplemented by the enclosed cost support material. Schedule A reflects INAD's existing switched transport charge of $0.00855 compared with the supported rate of $0.00819. Through this filing, INAD proposes to reduce its switched transport charge from $0.00855 to $0.00819 for the test period ending June 30, 2009 resulting in a reduction of switched transport revenue of $844,592 for the period ending June 30, 2009. The proposed switched transport charge will produce revenues that will generate a rate of return on investment of 11.13 % for the test period ended June 30, 2009.

Included in the cost support material are schedules depicting projected investment and expense data, demand quantities, jurisdictional cost allocations and rate calculations for the twelve-month period ending June 30, 2009. Cost and revenue data for the historical period from January 1 through December 31, 2007 is contained in the Company's Tariff Review Plan (TRP) which has been filed under separate cover.

This filing is presented to comply with the Commission's July 1, 2008 annual access tariff filing requirements in Order, 23 FCC Rcd 5235 and subsequent Tariff Review Plans, 23 FCC Rcd 5240 establishing the Tariff Review Plan (TRP) schedules to be filed in support of the annual access charge tariff filing. With this filing, INAD proposes to implement a switched transport charge of $0.00819 effective July 1, 2008 through June 30, 2010.

PUBLIC VERSION

TARIFF REVIEW PLAN

INDEX

RORCOS-1(P)	Page 1 of 4
RORCOS-1(P)	Page 2 of 4
RORCOS-1(P)	Page 3 of 4
RORCOS-1(P)	Page 4 of 4
RORCOS-1(H)	Page 1 of 4
RORCOS-1(H)	Page 2 of 4
RORCOS-1(H)	Page 3 of 4
RORCOS-1(H)	Page 4 of 4
RORCOS-2	Page 1 of 3
RORCOS-2	Page 2 of 3
RORCOS-2	Page 3 of 3
RORMAG-1	Page 1 of 1
RORMAG-2	Page 1 of 1
RORREV-1	Page 1 of 2
RORREV-1	Page 2 of 2
RORREV-2	Page 1 of 1
RORRTE-1	Page 1 of 2
RORRTE-1	Page 2 of 2
RORRTE-2	Page 1 of 1
RORRTE-3	Page 1 of 2
RORRTE-3	Page 2 of 2
RORDMD-1	Page 1 of 3
RORDMD-1	Page 2 of 3
RORDMD-1	Page 3 of 3
RORDMD-2	Page 1 of 1
RORDMD-3	Page 1 of 1
RORDMD-4	Page 1 of 1
RORDMD-5	Page 1 of 1
RORERN-1	Page 1 of 1
RORBSF-1	Page 1 of 1
RORDEM-1	Page 1 of 1
61.38 ACR-1 Historical	Page 1 of 1
61.38 ACR-1 Projected	Page 1 of 1
Certification	

PUBLIC VERSION

IOWA NETWORK SERVICES

4201 Corporate Drive
West Des Moines, IA
50266-5906

P 800.469.4000
F 515.830.0123

CERTIFICATION

I certify that I am the Chief Financial Officer of Iowa Network Services, Inc. and am authorized to deal with matters involving the interstate access tariff filing of Iowa Network Access Division; that I have examined the foregoing Tariff Review Plan; statements of fact contained in this Tariff Review Plan are true and this report is a correct statement of the business and affairs of the above named respondent in respect to each and every matter set forth therein during the period from July 1, 2008 to June 30, 2009.

June 24, 2008
Date

Dennis M. Creveling
Dennis M. Creveling
IOWA NETWORK SERVICES, INC.

IOWA NETWORK SERVICES, INC.
IOWA NETWORK ACCESS DIVISION
INTERSTATE ACCESS RATE DEVELOPMENT
TRANSMITTAL NO. 26
PROJECTED TEST PERIOD ENDED 6/30/2009

SECTION 2
SCHEDULE A

		SOURCE	CURRENT RATE	COST SUPPORT	DIFFERENCE
1	SWITCHED TRANSPORT RATE	(BELOW)	$0.00855	$0.00819	($0.00036)
2	STUDY PERIOD ACCESS MINUTES	SCHEDULE B	2,346,089,248	2,346,089,248	
3	STUDY PERIOD ACCESS REVENUE	LN 1*LN 2	$20,059,063	$19,214,471	($844,592)

	ACCESS RATE DEVELOPMENT	SOURCE	AMOUNT
4	PROJECTED REVENUE REQUIREMENT	SECTION 4	$19,270,037
5	LESS: MISCELLANEOUS REVENUE	RECORDS	43,754
7	ACCESS REVENUE REQUIREMENT	LN 4-LN 5	$19,226,283
8	PROJECTED ACCESS MINUTES	SCHEDULE B	2,346,089,248
9	PROJECTED ACCESS RATE PER MOU	LN 4/LN 5	$0.00819

PUBLIC VERSION

IOWA NETWORK SERVICES, INC.
IOWA NETWORK ACCESS DIVISION
EQUAL ACCESS MOU SUMMARY
TRANSMITTAL NO. 26
PROJECTED TEST PERIOD ENDED 6/30/2009

SECTION 2
SCHEDULE B

PRO FORMA ALL CARRIERS	DAYS	INTERSTATE INTRALATA			INTERSTATE INTERLATA			TOTAL	TOTAL
		ORIGINATING MINUTES	TERMINATING MINUTES	REVENUES	ORIGINATING MINUTES	TERMINATING MINUTES	REVENUES	MINUTES	REVENUES
7/1/2008 - 7/31/2008	31	1,602,881	14,945,931	$135,534.77	42,288,239	140,590,853	$1,497,779.76	199,427,904	$1,633,314.53
8/1/2008 - 8/31/2008	31	1,897,759	22,369,290	$198,747.13	40,836,308	134,212,226	$1,433,647.50	199,315,584	$1,632,394.63
9/1/2008 - 9/30/2008	30	1,736,481	18,331,299	$164,355.12	41,586,827	137,548,657	$1,467,119.61	199,203,264	$1,631,474.73
10/1/2008 - 10/31/2008	31	1,735,502	18,320,963	$164,262.45	41,563,378	137,471,101	$1,466,292.38	199,090,944	$1,630,554.83
11/1/2008 - 11/30/2008	30	1,734,523	18,310,627	$164,169.78	41,539,929	137,393,545	$1,465,465.15	198,978,624	$1,629,634.93
12/1/2008 - 12/31/2008	31	1,733,544	18,300,291	$164,077.11	41,516,481	137,315,988	$1,464,637.92	198,866,304	$1,628,715.03
1/1/2009 - 1/31/2009	31	1,676,723	17,700,456	$158,699.10	40,155,682	132,815,139	$1,416,631.02	192,348,000	$1,575,330.12
2/1/2009 - 2/28/2009	28	1,675,046	17,682,756	$158,540.40	40,115,526	132,682,323	$1,415,214.39	192,155,652	$1,573,754.79
3/1/2009 - 3/31/2009	31	1,673,371	17,665,073	$158,381.86	40,075,411	132,549,641	$1,413,799.17	191,963,496	$1,572,181.03
4/1/2009 - 4/30/2009	30	1,671,698	17,647,408	$158,223.48	40,035,335	132,417,092	$1,412,385.38	191,771,533	$1,570,608.86
5/1/2009 - 5/31/2009	31	1,670,026	17,629,761	$158,065.25	39,995,300	132,284,674	$1,410,972.99	191,579,761	$1,569,038.24
6/1/2009 - 6/30/2009	30	1,668,356	17,612,131	$157,907.19	39,955,305	132,152,390	$1,409,562.02	191,388,182	$1,567,469.21
TOTAL		20,475,912	216,515,985	$1,940,963.64	489,663,721	1,619,433,629	$10,748,844.70	2,346,089,248	$19,214,470.94
3rd QUARTER		5,237,121	55,646,520	$498,637.03	124,711,374	412,351,736	$4,398,546.87	597,946,752	$4,897,183.90
4th QUARTER		5,203,569	54,931,880	$492,509.33	124,619,788	412,180,634	$4,396,395.46	596,935,872	$4,888,904.79
1st QUARTER		5,025,141	53,048,285	$475,621.36	120,346,619	398,047,103	$4,245,644.58	576,467,148	$4,721,265.94
2nd QUARTER		5,010,080	52,889,299	$474,195.92	119,985,940	396,854,156	$4,232,920.39	574,739,476	$4,707,116.31
TOTAL COMPANY		20,475,912	216,515,985	$1,940,963.64	489,663,721	1,619,433,629	$17,273,507.30	2,346,089,248	$19,214,470.94

PUBLIC VERSION

SUMMARY OF REVENUE REQUIREMENT BY ACCESS ELEMENT

					COMMON LINE		TRAFFIC SENSITIVE					SPECIAL ACCESS						
									COMMON TRANSPORT		DEDICATED	NEL TERMINATION		CHANNEL MILEAGE			IX CATEGORY	
LN	A/C	DESCRIPTION	TOTAL COMPANY	SOURCE	LIMITED PAY	COMMON LINE	SWITCHING	INFO	TERM	FACILITY	TRANSPORT	ALLOCATED	TERM	TERM	FACILITY	B&C	MSG	P.L.
1		NET INVESTMENT FOR SETTLEMENTS	6,692,758	(NOTE A)	0	0	4,241,197	0	2,451,561	0	0	0	0	0	0	0	0	0
2		RATE OF RETURN	11.2500%		11.2500%	11.2500%	11.2500%	11.2500%	11.2500%	11.2500%	11.2500%	11.2500%	11.2500%	11.2500%	11.2500%	11.2500%	11.2500%	11.2500%
3		RETURN ON INVESTMENT	752,935	LN 1*LN 2	0	0	477,135	0	275,801	0	0	0	0	0	0	0	0	0
4		ALLOW FOR FUNDS USED DURING CONSTR	0	A-8,LN 29	0	0	0	0	0	0	0	0	0	0	0	0	0	0
5		NET RETURN FOR SETTLEMENTS	752,935	LN 3-LN 4	0	0	477,135	0	275,801	0	0	0	0	0	0	0	0	0
6		FEDERAL OPERATING INCOME TAX - ACTUAL	0	RECORDS	0	0	0	0	0	0	0	0	0	0	0	0	0	0
7		FEDERAL OPERATING INCOME TAX - OPTION	376,677	LN 30	0	0	238,700	0	137,977	0	0	0	0	0	0	0	0	0
8		FEDERAL ITC AMORTIZATION	0	A-12,LN 22	0	0	0	0	0	0	0	0	0	0	0	0	0	0
9		STATE OPERATING INCOME TAX - ACTUAL	0	RECORDS	0	0	0	0	0	0	0	0	0	0	0	0	0	0
10		STATE OPERATING INCOME TAX - OPTION	125,391	LN 36	0	0	79,460	0	45,931	0	0	0	0	0	0	0	0	0
11		STATE ITC AMORTIZATION	0	A-12,LN 23	0	0	0	0	0	0	0	0	0	0	0	0	0	0
12		PROVISION FOR DEFERRED INCOME TAX	0	RECORDS	0	0	0	0	0	0	0	0	0	0	0	0	0	0
13		OPERATING EXPENSE & OTHER TAXES	17,990,212	A-8,LN 18	0	0	3,361,866	0	1,943,276	12,685,069	0	0	0	0	0	0	0	0
14		NONOPERATING EXP	24,823	A-8,LN 23	0	0	15,730	0	9,093	0	0	0	0	0	0	0	0	0
15		UNCOLLECTIBLES	0	A-8,LN 28	0	0	0	0	0	0	0	0	0	0	0	0	0	0
16		BASIS FOR GROSS RECEIPTS TAX	19,270,037		0	0	4,172,891	0	2,412,077	12,685,069	0	0	0	0	0	0	0	0
17		GROSS RECEIPTS TAX RATE	0.0000%		0.0000%	0.0000%	0.0000%	0.0000%	0.0000%	0.0000%	0.0000%	0.0000%	0.0000%	0.0000%	0.0000%	0.0000%	0.0000%	0.0000%
18		GROSS RECEIPTS TAX	0	LN16*LN17	0	0	0	0	0	0	0	0	0	0	0	0	0	0
19		TOTAL REVENUE REQUIREMENT	19,270,037	LN16+LN18	0	0	4,172,891	0	2,412,077	12,685,069	0	0	0	0	0	0	0	0

NOTE A: INCLUDES A-2,LN 31 LESS A/C 2004, TPUC - LONG TERM

		OPTIONAL GROSS UP INCOME TAX CALCULATION																
20		RETURN ON INVESTMENT	752,935	LN 3	0	0	477,135	0	275,801	0	0	0	0	0	0	0	0	0
21		INTEREST AND RELATED ITEMS	21,740	A-12,LN 16	0	0	13,776	0	7,963	0	0	0	0	0	0	0	0	0
22		OTHER INCOME ADJUSTMENTS	0	A-12,LN 20	0	0	0	0	0	0	0	0	0	0	0	0	0	0
23		TOTAL INCOME ADJUSTMENTS	21,740	LN21+LN22	0	0	13,776	0	7,963	0	0	0	0	0	0	0	0	0
24		RETURN LESS INCOME ADJ	731,196	LN20-LN23	0	0	463,358	0	267,837	0	0	0	0	0	0	0	0	0
25		FEDERAL ITC AMORTIZATION	0	A-12,LN 22	0	0	0	0	0	0	0	0	0	0	0	0	0	0
26		FIT BASE	731,196		0	0	463,358	0	267,837	0	0	0	0	0	0	0	0	0
27		FEDERAL TAXABLE INCOME	1,107,872		0	0	702,058	0	405,814	0	0	0	0	0	0	0	0	0
28	34.00%	FEDERAL INCOME TAX	376,677	LN 27*FTR	0	0	238,700	0	137,977	0	0	0	0	0	0	0	0	0
29		FEDERAL SURTAX ALLOCATION	0	/LN 26	0	0	0	0	0	0	0	0	0	0	0	0	0	0
30		NET FEDERAL TAX BEFORE ITC AMORT	376,677	LN28-LN29	0	0	238,700	0	137,977	0	0	0	0	0	0	0	0	0
31		STATE ITC AMORTIZATION	0	A-12, LN23	0	0	0	0	0	0	0	0	0	0	0	0	0	0
32		SIT BASE	1,107,872		0	0	702,058	0	405,814	0	0	0	0	0	0	0	0	0
33		STATE TAXABLE INCOME	1,258,946		0	0	797,793	0	461,152	0	0	0	0	0	0	0	0	0
34	12.00%	STATE INCOME TAX	125,391	LN 33*STR	0	0	79,460	0	45,931	0	0	0	0	0	0	0	0	0
35		STATE SURTAX ALLOCATION	0	/LN 32	0	0	0	0	0	0	0	0	0	0	0	0	0	0
36		NET STATE INCOME TAX BEFORE ITC AMORT	125,391	LN34-LN35	0	0	79,460	0	45,931	0	0	0	0	0	0	0	0	0
37		FEDERAL TAX AT MAXIMUM RATE	376,677		0	0	238,700	0	137,977	0	0	0	0	0	0	0	0	0
38		INCOME ADJUSTMENT FOR FIT	0		0	0	0	0	0	0	0	0	0	0	0	0	0	0

PUBLIC VERSION

2002 Copyright TIS, Inc. v1.9

SUMMARY OF TELEPHONE PLANT AND RESERVES

A-2,1of1

LN	A/C	DESCRIPTION	TOTAL COMPANY	SOURCE	COMMON LINE: LIMITED PAY	COMMON LINE: COMMON LINE	TRAFFIC SENSITIVE: SWITCHING	TRAFFIC SENSITIVE: INFO	TRAFFIC SENSITIVE: COMMON TRANSPORT TERM	TRAFFIC SENSITIVE: COMMON TRANSPORT FACILITY	TRAFFIC SENSITIVE: DEDICATED TRANSPORT	SPECIAL ACCESS: NEL TERMINATION ALLOCATED	SPECIAL ACCESS: NEL TERMINATION TERM	SPECIAL ACCESS: CHANNEL MILEAGE TERM	SPECIAL ACCESS: CHANNEL MILEAGE FACILITY	B&C	IX CATEGORY: MSG	IX CATEGORY: P.L.
		NET INVESTMENT SUMMARY																
1		GENERAL SUPPORT FACILITIES	4,306,718	A-3,LN 6C	0	0	2,729,165	0	1,577,553	0	0	0	0	0	0		0	0
2		CENTRAL OFFICE SWITCHING	22,353,155	A-4,LN 21+25			14,165,183		8,187,972		0						0	
3		OPERATOR SYSTEMS	0	A-4,LN 17			0	0	0		0						0	
4		CENTRAL OFFICE TRANSMISSION	0	A-4,LN 41	0	0			0		0	0	0	0			0	0
5		INFORMATION ORIG/TERM	0	A-5,LN 10	0	0							0					
6		CABLE AND WIRE FACILITIES	0	A-5,LN 21	0	0				0	0	0	0		0		0	0
7		TANGIBLE ASSETS	471,377	A-3,LN 14	0	0	298,712	0	172,666	0	0	0	0	0	0		0	0
8		INTANGIBLE ASSETS	200,077	A-3,LN 15	0	0	126,788	0	73,288	0	0	0	0	0	0		0	0
9		TOTAL PLANT IN SERVICE	27,331,327		0	0	17,319,848	0	10,011,479	0	0	0	0	0	0		0	0
10		% DISTRIBUTION	100.0000%		0.0000%	0.0000%	63.3699%	0.0000%	36.6301%	0.0000%	0.0000%	0.0000%	0.0000%	0.0000%	0.0000%		0.0000%	0.0000%
11		PROPERTY HELD FOR FUTURE USE	0	A-6,LN 6	0	0	0	0	0	0	0	0	0	0	0		0	0
12		PLANT UNDER CONSTRUCT. - SHORT TERM	0	A-6,LN 13	0	0	0	0	0	0	0	0	0	0	0		0	0
13		PLANT UNDER CONSTRUCT. - LONG TERM	0	A-6,LN 20	0	0	0	0	0	0	0	0	0	0	0		0	0
14		TELEPHONE PLANT ADJUSTMENT	0	A-6,LN 27	0	0	0	0	0	0	0	0	0	0	0		0	0
15		TOTAL PROPERTY,PLANT & EQUIP.	27,331,327		0	0	17,319,848	0	10,011,479	0	0	0	0	0	0		0	0
16		% DISTRIBUTION	100.0000%		0.0000%	0.0000%	63.3699%	0.0000%	36.6301%	0.0000%	0.0000%	0.0000%	0.0000%	0.0000%	0.0000%		0.0000%	0.0000%
17		ACCUM DEPRECIATION - PLANT IN SERVICE	18,433,721	A-7,LN 7	0	0	11,681,440	0	6,752,281	0	0	0	0	0	0		0	0
18		ACCUM DEPRECIATION - FUTURE USE	0	A-7,LN 8	0	0	0	0	0	0	0	0	0	0	0		0	0
19		ACCUM AMORTIZATION - TANGIBLE PROPERTY	457,392	A-7,LN 15	0	0	289,849	0	167,543	0	0	0	0	0	0		0	0
20		ACCUM AMORTIZATION - INTANGIBLE PROP.	200,077	A-7,LN 16	0	0	126,788	0	73,288	0	0	0	0	0	0		0	0
21		ACCUM AMORTIZATION - TEL PLANT ADJ.	0	A-7,LN 17	0	0	0	0	0	0	0	0	0	0	0		0	0
22		OPERATING DEFERRED INCOME TAX	2,249,468	A-7,LN 26	0	0	1,425,487	0	823,981	0	0	0	0	0	0		0	0
23		OTHER DEFERRED CREDITS - NET	0	A-7,LN 34	0	0	0	0	0	0	0	0	0	0	0		0	0
24		NET TELEPHONE PLANT	5,990,670		0	0	3,796,284	0	2,194,385	0	0	0	0	0	0		0	0
25		% DISTRIBUTION	100.0000%		0.0000%	0.0000%	63.3699%	0.0000%	36.6301%	0.0000%	0.0000%	0.0000%	0.0000%	0.0000%	0.0000%		0.0000%	0.0000%
26		MATERIALS AND SUPPLIES	0	A-3,LN 16	0	0	0	0	0	0	0	0	0	0	0		0	0
27		RTB STOCK	0	A-3,LN 17	0	0	0	0	0	0	0	0	0	0	0		0	0
28		EQUAL ACCESS EQUIPMENT	0	A-3,LN 8			0											
29		OTHER JURISDICTIONAL ASSETS	0	A-3,LN 18	0	0	0	0	0	0	0	0	0	0	0		0	0
30		CASH WORKING CAPITAL	702,089	A-3,LN 10	0	0	444,913	0	257,175	0	0	0	0	0	0		0	0
31		NET TELEPHONE PLANT,M&S AND CASH WORKING CAPITAL	6,692,758		0	0	4,241,197	0	2,451,561	0	0	0	0	0	0		0	0
32		% DISTRIBUTION	100.0000%		0.0000%	0.0000%	63.3699%	0.0000%	36.6301%	0.0000%	0.0000%	0.0000%	0.0000%	0.0000%	0.0000%		0.0000%	0.0000%

PUBLIC VERSION

2002 Copyright TIS, Inc. v1.9

GENERAL SUPPORT FACILITIES AND MISCELLANEOUS PLANT ALLOCATION

A-3,1of1

LN	A/C	DESCRIPTION	TOTAL COMPANY	SOURCE	COMMON LINE		TRAFFIC SENSITIVE					SPECIAL ACCESS				B&C	IX CATEGORY	
					LIMITED PAY	COMMON LINE	SWITCHING	INFO	COMMON TRANSPORT TERM	COMMON TRANSPORT FACILITY	DEDICATED TRANSPORT	NEL TERMINATION ALLOCATED	NEL TERMINATION TERM	CHANNEL MILEAGE TERM	CHANNEL MILEAGE FACILITY		MSG	P.L.
		BASIS FOR GENERAL SUPPORT FACILITIES																
1		CENTRAL OFFICE EQUIPMENT	22,353,155	A-4,LN 42	0	0	14,165,183	0	8,187,972		0	0	0	0			0	0
2		INFORMATION ORIG/TERM	0	A-5,LN 10	0	0							0					
3		CWF EXCL CAT 1.3	0	A-5,LN 23	0	0				0	0	0	0		0		0	0
4		TOTAL	22,353,155		0	0	14,165,183	0	8,187,972	0	0	0	0	0	0		0	0
5		% DISTRIBUTION	100.0000%		0.0000%	0.0000%	63.3699%	0.0000%	36.6301%	0.0000%	0.0000%	0.0000%	0.0000%	0.0000%	0.0000%		0.0000%	0.0000%
		GENERAL SUPPORT ASSETS																
6a		ALLOCATED	4,306,718	LN 5	0	0	2,729,165	0	1,577,553	0	0	0	0	0	0		0	0
6b		DIRECT NON ACCESS	0	DIRECT													0	0
6c		TOTAL GENERAL SUPPORT ASSETS	4,306,718		0	0	2,729,165	0	1,577,553	0	0	0	0	0	0		0	0
7		% DISTRIBUTION	100.0000%		0.0000%	0.0000%	63.3699%	0.0000%	36.6301%	0.0000%	0.0000%	0.0000%	0.0000%	0.0000%	0.0000%		0.0000%	0.0000%
8		EQUAL ACCESS EQUIPMENT	0	DIRECT			0											
9		COE,IOT,CWF,GENERAL SUPPORT AND EQUAL ACCESS EQUIPMENT	26,659,873		0	0	16,894,348	0	9,765,525	0	0	0	0	0	0		0	0
10		% DISTRIBUTION	100.0000%		0.0000%	0.0000%	63.3699%	0.0000%	36.6301%	0.0000%	0.0000%	0.0000%	0.0000%	0.0000%	0.0000%		0.0000%	0.0000%
11		TANGIBLE ASSETS																
12		CAPITAL LEASES	0	LN 10	0	0	0	0	0	0	0	0	0	0	0		0	0
13		LEASEHOLD IMPROVEMENTS	471,377	LN 10	0	0	298,712	0	172,666	0	0	0	0	0	0		0	0
14		TOTAL	471,377		0	0	298,712	0	172,666	0	0	0	0	0	0		0	0
15		INTANGIBLE ASSETS	200,077	LN 10	0	0	126,788	0	73,288	0	0	0	0	0	0		0	0
16		MATERIALS AND SUPPLIES	0	LN 10	0	0	0	0	0	0	0	0	0	0	0		0	0
17		RTB STOCK	0	LN 10	0	0	0	0	0	0	0	0	0	0	0		0	0
18		OTHER JURISDICTIONAL ASSETS	0	LN 10	0	0	0	0	0	0	0	0	0	0	0		0	0
19		COE,IOT,CWF,GEN SUPP & EQUAL ACCESS FOR APPORTIONING PRESUBSCRIPTION	26,659,873		0	0	16,894,348	0	9,765,525	0	0							
20		% DISTRIBUTION	100.0000%		0.0000%	0.0000%	63.3699%	0.0000%	36.6301%	0.0000%	0.0000%							
21		COE,IOT & CWF EXCL CCL FOR ASSIGNING CARRIER ACCESS BILLING EXPENSES	22,353,155				14,165,183	0	8,187,972	0	0	0	0	0	0			
22		% DISTRIBUTION	100.0000%				63.3699%	0.0000%	36.6301%	0.0000%	0.0000%	0.0000%	0.0000%	0.0000%	0.0000%			

2002 Copyright TIS, Inc. v1.9

PUBLIC VERSION

CENTRAL OFFICE EQUIPMENT ALLOCATION

LN	A/C	DESCRIPTION	TOTAL COMPANY	SOURCE	COMMON LINE: LIMITED PAY	COMMON LINE: COMMON LINE	TRAFFIC SENSITIVE: SWITCHING	TRAFFIC SENSITIVE: INFO	TRAFFIC SENSITIVE: COMMON TRANSPORT TERM	TRAFFIC SENSITIVE: COMMON TRANSPORT FACILITY	TRAFFIC SENSITIVE: DEDICATED TRANSPORT	SPECIAL ACCESS: NEL TERMINATION ALLOCATED	SPECIAL ACCESS: NEL TERMINATION TERM	SPECIAL ACCESS: CHANNEL MILEAGE TERM	SPECIAL ACCESS: CHANNEL MILEAGE FACILITY	B&C	IX CATEGORY: MSG	IX CATEGORY: P.L.
		ALLOCATION FACTORS																
1		STANDARD WORK SECONDS																
2		- MANUAL BOARDS	100.0000%	AL-1,LN 9			0.0000%	0.0000%									100.0000%	
3		- TSPS COMPLEX	100.0000%	AL-1,LN 10			0.0000%	0.0000%									100.0000%	
4		EQUIVALENT ACCESS LINES - MSG COE	0.0000%	AL-1,LN 2	0.0000%	0.0000%						0.0000%						
5		IX CIRCUIT TERMINATIONS - MSG COE	100.0000%	AL-1,LN 6					100.0000%		0.0000%							
		CENTRAL OFFICE EQUIPMENT																
6	2220	OPERATOR SYSTEMS																
7		MANUAL SWITCHBOARDS	0	LN 2			0	0									0	
8		AUXILIARY SWITCHBOARDS																
9		- DIRECTORY ASSISTANCE	0	DIRECT				0										
10		- INTERCEPT	0	DIRECT			0											
11		- OTHER	0	DIRECT													0	
12		SERVICE OBSERVING BOARDS	0	LN 27			0	0	0		0						0	
13		TSPS																
14		- OPERATOR	0	LN 3			0	0									0	
15		- RTA	0	LN 27			0	0	0		0						0	
16		- OTHER	0	LN 27			0	0	0		0						0	
17		TOTAL OPERATOR SYSTEMS	0				0	0	0		0						0	
18	2210	TANDEM SWITCHING EQUIPMENT																
19		ACCESS	8,187,972	DIRECT					8,187,972									
20		NON ACCESS	0	DIRECT													0	
21		TOTAL TANDEM SWITCH	8,187,972						8,187,972								0	
22	2210	LOCAL SWITCHING EQUIPMENT																
23		ACCESS	14,165,183	DIRECT			14,165,183											
24		DEDICATED	0	DIRECT							0							
25		TOTAL LOCAL SWITCH	14,165,183				14,165,183				0							
26		TOTAL CAT1 EXCL SVC OBS, CAT 2 AND 3	22,353,155				14,165,183	0	8,187,972		0						0	
27		% DISTRIBUTION	100.0000%	LN 26			63.3699%	0.0000%	36.6301%		0.0000%						0.0000%	

PUBLIC VERSION

2002 Copyright TIS, Inc v1.9

CENTRAL OFFICE EQUIPMENT ALLOCATION

LN	A/C	DESCRIPTION	TOTAL COMPANY	SOURCE	COMMON LINE		TRAFFIC SENSITIVE					SPECIAL ACCESS				B&C	IX CATEGORY	
					LIMITED PAY	COMMON LINE	SWITCHING	INFO	COMMON TRANSPORT TERM	COMMON TRANSPORT FACILITY	DEDICATED TRANSPORT	NEL TERMINATION ALLOCATED	NEL TERMINATION TERM	CHANNEL MILEAGE TERM	CHANNEL MILEAGE FACILITY		MSG	P.L.
28	2230	CENTRAL OFFICE TRANSMISSION																
29		EXCHANGE WIDEBAND	0	DIRECT					0					0				
30		EXCHANGE TRUNK - BASIC	0	DIRECT					0					0				
31		EXCHANGE TRUNK - SPECIAL	0	DIRECT							0			0				
32		SUBSCRIBER LINE	0	LN 4/DIRECT	0	0						0	0					
33		INTEREXCHANGE CIRCUIT																
34		FURNINSHED OTHERS	0	DIRECT							0			0				
35		ACCESS - BASIC	0	LN 5/DIRECT					0		0			0				
36		ACCESS - SPECIAL	0	DIRECT							0			0				
37		NON ACCESS	0	DIRECT													0	0
38		TOTAL IX CIRCUIT	0						0		0			0			0	0
39		HOST/REMOTE CIRCUIT	0	DIRECT					0					0				
40		EQUIPMENT RENTED OTHERS	0	DIRECT													0	0
41		TOTAL CENTRAL OFFICE TRANSMISSION	0		0	0			0		0	0	0	0			0	0
42		TOTAL CENTRAL OFFICE EQUIPMENT	22,353,155		0	0	14,165,183	0	8,187,972		0	0	0	0			0	0
43		% DISTRIBUTION	100.0000%		0.0000%	0.0000%	63.3699%	0.0000%	36.6301%		0.0000%	0.0000%	0.0000%	0.0000%			0.0000%	0.0000%
		COE RATIOS																
44		OPERATOR SYSTEMS	0.0000%	LN 17			0.0000%	0.0000%	0.0000%		0.0000%						0.0000%	
45		TANDEM SWITCHING	100.0000%	LN 21					100.0000%								0.0000%	
46		LOCAL SWITCHING	100.0000%	LN 25			100.0000%				0.0000%							
47		CENTRAL OFFICE SWITCHING	100.0000%	LN 21+25			63.3699%		36.6301%		0.0000%						0.0000%	
48		CENTRAL OFFICE TRANSMISSION	100.0000%	LN 37	0.0000%	0.0000%			100.0000%		0.0000%	0.0000%	0.0000%	0.0000%			0.0000%	0.0000%

2002 Copyright TIS, Inc. v1.9

PUBLIC VERSION

INFORMATION ORIGINATION/TERMINATION AND CABLE AND WIRE FACILITIES

A-5,1of1

LN	A/C	DESCRIPTION	TOTAL COMPANY	SOURCE	COMMON LINE: LIMITED PAY	COMMON LINE: COMMON LINE	TRAFFIC SENSITIVE: SWITCHING	TRAFFIC SENSITIVE: INFO	TRAFFIC SENSITIVE: COMMON TRANSPORT TERM	TRAFFIC SENSITIVE: COMMON TRANSPORT FACILITY	TRAFFIC SENSITIVE: DEDICATED TRANSPORT	SPECIAL ACCESS: NEL TERMINATION ALLOCATED	SPECIAL ACCESS: NEL TERMINATION TERM	SPECIAL ACCESS: CHANNEL MILEAGE TERM	SPECIAL ACCESS: CHANNEL MILEAGE FACILITY	B&C	IX CATEGORY: MSG	IX CATEGORY: P.L.
		ALLOCATION FACTORS																
1		EQUIVALENT ACCESS LINES - MSG CWF	0.0000%	AL-1,LN 4	0.0000%	0.0000%						0.0000%						
2		IX CIRCUIT MILES - MSG CWF	100.0000%	AL-1,LN 8						100.0000%	0.0000%							
3	2310	INFORMATION ORIG/TERM																
4		OTHER IOT EQUIPMENT																
5		COIN PUBLIC TELEPHONE	0	DIRECT		0												
6		COINLESS PUBLIC TELEPHONE	0	DIRECT	0													
7		OTHER	0	DIRECT		0							0					
8		SUBTOTAL	0		0	0							0					
9		NEW CUSTOMER PREMISE EQUIP	0	DIRECT		0							0					
10		TOTAL ORIG/TERM EQUIP	0		0	0							0					
11		% DISTRIBUTION	0.0000%		0.0000%	0.0000%							0.0000%					
12	2410	CABLE AND WIRE FACILITIES																
13		SUBSCRIBER LINE	0	LN 1/DIRECT	0	0						0	0					
14		EXCHANGE WIDEBAND	0	DIRECT						0					0			
15a		EXCHANGE TRUNK - BASIC	0	DIRECT						0					0			
15b		EXCHANGE TRUNK - SPECIAL	0	DIRECT							0				0			
16		INTEREXCHANGE WIDEBAND	0	DIRECT						0					0			
17a		IX TRUNK - ACCESS	0	LN 2/DIRECT						0	0				0			
17b		IX TRUNK - SPECIAL	0	DIRECT							0				0			
18		IX TRUNK - NON ACCESS	0	DIRECT													0	0
19		HOST/REMOTE	0	DIRECT						0					0			
20		EQUIPMENT FURNISHED OTHERS	0	DIRECT													0	0
21		TOTAL CABLE AND WIRE FACILITIES	0		0	0				0	0	0	0		0		0	0
22		% DISTRIBUTION	100.0000%		0.0000%	0.0000%				100.0000%	0.0000%	0.0000%	0.0000%		0.0000%		0.0000%	0.0000%
23		TOTAL CWF EXCLUDING CAT 1.3	0		0	0				0	0	0	0		0		0	0
24		% DISTRIBUTION	100.0000%		0.0000%	0.0000%				100.0000%	0.0000%	0.0000%	0.0000%		0.0000%		0.0000%	0.0000%

PUBLIC VERSION

2002 Copyright TIS, Inc. v1.9

OTHER TELECOMMUNICATIONS PLANT ALLOCATION

A-6,1of1

LN	A/C	DESCRIPTION	TOTAL COMPANY	SOURCE	COMMON LINE		TRAFFIC SENSITIVE					SPECIAL ACCESS				B&C	IX CATEGORY	
					LIMITED PAY	COMMON LINE	SWITCHING	INFO	COMMON TRANSPORT TERM	COMMON TRANSPORT FACILITY	DEDICATED TRANSPORT	NEL TERMINATION ALLOCATED	NEL TERMINATION TERM	CHANNEL MILEAGE TERM	CHANNEL MILEAGE FACILITY		MSG	P.L.
		OTHER TELECOMMUNICATIONS PLANT																
1	2002	PROPERTY HELD FOR FUTURE USE																
2		GENERAL SUPPORT	0	A-3,LN 7	0	0	0	0	0	0	0	0	0	0	0		0	0
3		CENTRAL OFFICE EQUIPMENT	0	A-4,LN 43	0	0	0	0	0	0	0	0	0	0	0		0	0
4		CABLE AND WIRE FACILITIES	0	A-5,LN 22	0	0				0	0	0	0	0	0		0	0
5		UNDISTRIBUTED	0	A-3,LN 10	0	0	0	0	0	0	0	0	0	0	0		0	0
6		TOTAL	0		0	0	0	0	0	0	0	0	0	0	0		0	0
7		% DISTRIBUTION	0.0000%		0.0000%	0.0000%	0.0000%	0.0000%	0.0000%	0.0000%	0.0000%	0.0000%	0.0000%	0.0000%	0.0000%		0.0000%	0.0000%
8	2003	PLANT UNDER CONSTR. - SHORT TERM																
9		GENERAL SUPPORT	0	A-3,LN 7	0	0	0	0	0	0	0	0	0	0	0		0	0
10		CENTRAL OFFICE EQUIPMENT	0	A-4,LN 43	0	0	0	0	0	0	0	0	0	0	0		0	0
11		CABLE AND WIRE FACILITIES	0	A-5,LN 22	0	0				0	0	0	0	0	0		0	0
12		UNDISTRIBUTED	0	A-3,LN 10	0	0	0	0	0	0	0	0	0	0	0		0	0
13		TOTAL	0		0	0	0	0	0	0	0	0	0	0	0		0	0
14		% DISTRIBUTION	0.0000%		0.0000%	0.0000%	0.0000%	0.0000%	0.0000%	0.0000%	0.0000%	0.0000%	0.0000%	0.0000%	0.0000%		0.0000%	0.0000%
15	2004	PLANT UNDER CONSTR. - LONG TERM																
16		GENERAL SUPPORT	0	A-3,LN 7	0	0	0	0	0	0	0	0	0	0	0		0	0
17		CENTRAL OFFICE EQUIPMENT	0	A-4,LN 43	0	0	0	0	0	0	0	0	0	0	0		0	0
18		CABLE AND WIRE FACILITIES	0	A-5,LN 22	0	0				0	0	0	0	0	0		0	0
19		UNDISTRIBUTED	0	A-3,LN 10	0	0	0	0	0	0	0	0	0	0	0		0	0
20		TOTAL	0		0	0	0	0	0	0	0	0	0	0	0		0	0
21		% DISTRIBUTION	0.0000%		0.0000%	0.0000%	0.0000%	0.0000%	0.0000%	0.0000%	0.0000%	0.0000%	0.0000%	0.0000%	0.0000%		0.0000%	0.0000%
22	2005	TELECOMMUNICATIONS PLANT ADJUST.																
23		GENERAL SUPPORT	0	A-3,LN 7	0	0	0	0	0	0	0	0	0	0	0		0	0
24		CENTRAL OFFICE EQUIPMENT	0	A-4,LN 43	0	0	0	0	0	0	0	0	0	0	0		0	0
25		CABLE AND WIRE FACILITIES	0	A-5,LN 22	0	0				0	0	0	0	0	0		0	0
26		UNDISTRIBUTED	0	A-3,LN 10	0	0	0	0	0	0	0	0	0	0	0		0	0
27		TOTAL	0		0	0	0	0	0	0	0	0	0	0	0		0	0
28		% DISTRIBUTION	0.0000%		0.0000%	0.0000%	0.0000%	0.0000%	0.0000%	0.0000%	0.0000%	0.0000%	0.0000%	0.0000%	0.0000%		0.0000%	0.0000%

PUBLIC VERSION

2002 Copyright TIS, Inc. v1.9

ACCUMULATED DEPRECIATION, AMORTIZATION AND DEFERRED INCOME TAXES

A-7,1of1

LN	A/C	DESCRIPTION	TOTAL COMPANY	SOURCE	COMMON LINE		TRAFFIC SENSITIVE					SPECIAL ACCESS				B&C	IX CATEGORY	
					LIMITED PAY	COMMON LINE	SWITCHING	INFO	COMMON TRANSPORT TERM	COMMON TRANSPORT FACILITY	DEDICATED TRANSPORT	NEL TERMINATION ALLOCATED	NEL TERMINATION TERM	CHANNEL MILEAGE TERM	CHANNEL MILEAGE FACILITY		MSG	P.L.
1	3100	ACCUM DEPRECIATION - PLANT IN SERVICE																
2		GENERAL SUPPORT	3,096,269	A-3,LN 10	0	0	1,962,104	0	1,134,165	0	0	0	0	0	0		0	0
3		CENTRAL OFFICE SWITCHING EQUIPMENT	15,337,452	A-3,LN 10	0	0	9,719,336	0	5,618,116	0	0	0	0	0	0		0	0
4		OPERATOR SYSTEMS EQUIPMENT	0	A-3,LN 10	0	0	0	0	0	0	0	0	0	0	0		0	0
5		CENTRAL OFFICE TRANSMISSION	0	A-3,LN 10	0	0	0	0	0	0	0	0	0	0	0		0	0
6		UNDISTRIBUTED COE	0	A-3,LN 10	0	0	0	0	0	0	0	0	0	0	0		0	0
7		INFORMATION ORIG/TERM	0	A-3,LN 10	0	0	0	0	0	0	0	0	0	0	0		0	0
8		CABLE AND WIRE FACILITIES	0	A-3,LN 10	0	0	0	0	0	0	0	0	0	0	0		0	0
9		TOTAL ACCUM DEPR - TPIS	18,433,721		0	0	11,681,440	0	6,752,281	0	0	0	0	0	0		0	0
10	3200	ACCUM DEPRECIATION - FUTURE USE	0	A-3,LN 10	0	0	0	0	0	0	0	0	0	0	0		0	0
11		TOTAL ACCUM DEPRECIATION	18,433,721		0	0	11,681,440	0	6,752,281	0	0	0	0	0	0		0	0
12		% DISTRIBUTION	100.0000%		0.0000%	0.0000%	63.3699%	0.0000%	36.6301%	0.0000%	0.0000%	0.0000%	0.0000%	0.0000%	0.0000%		0.0000%	0.0000%
		ACCUMULATED AMORTIZATION																
13	3400	TANGIBLE ASSETS																
14		CAPITAL LEASES	0	A-3,LN 10	0	0	0	0	0	0	0	0	0	0	0		0	0
15		LEASEHOLD IMPROVEMENTS	457,392	A-3,LN 10	0	0	289,849	0	167,543	0	0	0	0	0	0		0	0
16		UNDISTRIBUTED	0	A-3,LN 10	0	0	0	0	0	0	0	0	0	0	0		0	0
17		TOTAL ACCUM AMORT - TANGIBLE	457,392		0	0	289,849	0	167,543	0	0	0	0	0	0		0	0
18	3500	INTANGIBLE ASSETS	200,077	A-3,LN 10	0	0	126,788	0	73,288	0	0	0	0	0	0		0	0
19	3600	TELEPHONE PLANT ADJUSTMENT	0	A-3,LN 10	0	0	0	0	0	0	0	0	0	0	0		0	0
20		TOTAL ACCUM AMORTIZATION	657,469		0	0	416,638	0	240,831	0	0	0	0	0	0		0	0
21		% DISTRIBUTION	100.0000%		0.0000%	0.0000%	63.3699%	0.0000%	36.6301%	0.0000%	0.0000%	0.0000%	0.0000%	0.0000%	0.0000%		0.0000%	0.0000%
22	4100&	NET OPERATING DEFERRED INC TAX																
23	4340	GENERAL SUPPORT	0	A-3,LN 10	0	0	0	0	0	0	0	0	0	0	0		0	0
24		CENTRAL OFFICE EQUIP	0	A-3,LN 10	0	0	0	0	0	0	0	0	0	0	0		0	0
25		INFORMATION ORIG/TERM	0	A-3,LN 10	0	0	0	0	0	0	0	0	0	0	0		0	0
26		CABLE AND WIRE FACILITIES	0	A-3,LN 10	0	0	0	0	0	0	0	0	0	0	0		0	0
27		UNDISTRIBUTED	2,249,468	A-3,LN 10	0	0	1,425,487	0	823,981	0	0	0	0	0	0		0	0
28		TOTAL NET DEFERRED INC TAX	2,249,468		0	0	1,425,487	0	823,981	0	0	0	0	0	0		0	0
29		% DISTRIBUTION	100.0000%		0.0000%	0.0000%	63.3699%	0.0000%	36.6301%	0.0000%	0.0000%	0.0000%	0.0000%	0.0000%	0.0000%		0.0000%	0.0000%
30	4360	OTHER DEFERRED CREDITS - NET																
31		GENERAL SUPPORT	0	A-3,LN 10	0	0	0	0	0	0	0	0	0	0	0		0	0
32		CENTRAL OFFICE EQUIP	0	A-3,LN 10	0	0	0	0	0	0	0	0	0	0	0		0	0
33		INFORMATION ORIG/TERM	0	A-3,LN 10	0	0	0	0	0	0	0	0	0	0	0		0	0
34		CABLE AND WIRE FACILITIES	0	A-3,LN 10	0	0	0	0	0	0	0	0	0	0	0		0	0
35		UNDISTRIBUTED	0	A-3,LN 10	0	0	0	0	0	0	0	0	0	0	0		0	0
36		TOTAL OTHER DEFERRED CREDITS	0		0	0	0	0	0	0	0	0	0	0	0		0	0
37		% DISTRIBUTION	0.0000%		0.0000%	0.0000%	0.0000%	0.0000%	0.0000%	0.0000%	0.0000%	0.0000%	0.0000%	0.0000%	0.0000%		0.0000%	0.0000%

PUBLIC VERSION

2002 Copyright TIS, Inc. v1.9

SUMMARY OF OPERATING EXPENSE AND TAX AND MISCELLANEOUS TAX ITEMS

A-8,1of1

					COMMON LINE		TRAFFIC SENSITIVE					SPECIAL ACCESS						
									COMMON TRANSPORT		DEDICATED	NEL TERMINATION		CHANNEL MILEAGE			IX CATEGORY	
LN	A/C	DESCRIPTION	TOTAL COMPANY	SOURCE	LIMITED PAY	COMMON LINE	SWITCHING	INFO	TERM	FACILITY	TRANSPORT	ALLOCATED	TERM	TERM	FACILITY	B&C	MSG	P.L
		OPERATING EXPENSE AND TAX																
1	6110	NETWORK SUPPORT EXPENSE	0	A-9,LN 6	0	0	0	0	0	0	0	0	0	0	0	0	0	0
2	6120	GENERAL SUPPORT EXPENSE	791,595	A-9,LN 7	0	0	501,634	0	289,962	0	0	0	0	0	0		0	0
3	6210	CENTRAL OFFICE EXPENSE	850,725	A-9,LN 15	0	0	539,104	0	311,621	0	0	0	0	0	0	0	0	0
4	6310	INFORMATION ORIG/TERM EXP	0	A-9,LN 22	0	0	0	0	0	0	0	0	0	0	0	0	0	0
5	6410	CABLE AND WIRE FACILITIES EXP	11,351,188	A-9,LN 24	0	0	0	0	0	11,351,188	0	0	0	0	0		0	0
6	6510	OTHER PLANT EXPENSE	0	A-10,LN 6	0	0	0	0	0	0	0	0	0	0	0		0	0
7	6530	NETWORK OPERATIONS EXPENSE	691,931	A-10,LN 7	0	0	438,476	0	253,455	0	0	0	0	0	0		0	0
8	6540	ACCESS CHARGE EXPENSE	0	A-10,LN 8													0	0
9	6610	MARKETING EXPENSE	0	A-11,LN 1	0	0	0	0	0	0	0	0	0	0	0		0	0
8	6620	SERVICES EXPENSE	129,618	A-11,LN29	0	0	82,139	0	47,479	0	0	0	0	0	0	0	0	0
11	6710	EXECUTIVE AND PLANNING EXP	306,088	A-12,LN 8	0	0	34,594	0	19,996	251,499	0	0	0	0	0	0	0	0
12	6720	GENERAL AND ADMINISTRATIVE EXP	1,317,323	A-12,LN 9	0	0	148,881	0	86,059	1,082,383	0	0	0	0	0	0	0	0
13		SUBTOTAL OPERATING EXPENSE	15,438,467		0	0	1,744,827	0	1,008,571	12,685,069	0	0	0	0	0	0	0	0
14		% DISTRIBUTION	100.0000%		0.0000%	0.0000%	11.3018%	0.0000%	6.5328%	82.1653%	0.0000%	0.0000%	0.0000%	0.0000%	0.0000%	0.0000%	0.0000%	0.0000%
15	6560	DEPRECIATION AND AMORTIZATION	2,426,854	A-10,LN 19+27	0	0	1,537,896	0	888,958	0	0	0	0	0	0	0	0	0
16	7200	OTHER OPERATING TAX	124,890	A-12,LN 24	0	0	79,143	0	45,747	0	0	0	0	0	0		0	0
17		EQUAL ACCESS EXPENSE	0	A-12,LN 12			0											
18		TOTAL OPERATING EXP & TAX	17,990,212		0	0	3,361,866	0	1,943,276	12,685,069	0	0	0	0	0	0	0	0
19		% DISTRIBUTION	100.0000%		0.0000%	0.0000%	18.6872%	0.0000%	10.8019%	70.5110%	0.0000%	0.0000%	0.0000%	0.0000%	0.0000%	0.0000%	0.0000%	0.0000%
20	7370	NON OPERATING EXPENSE																
21		ABANDONED CONSTRUCTION	0	A-3,LN 10	0	0	0	0	0	0	0	0	0	0	0	0	0	0
22		CONTRIBUTIONS	24,823	A-3,LN 10	0	0	15,730	0	9,093	0	0	0	0	0	0	0	0	0
23		TOTAL NON OPERATING EXP	24,823		0	0	15,730	0	9,093	0	0	0	0	0	0	0	0	0
24		UNCOLLECTIBLES																
25	5310	END USER MSG TOLL	0	A-3,LN 10	0	0	0	0	0	0	0	0	0	0	0	0	0	0
26	5320	END USER COMMON LINE	0	DIRECT		0												
27	5330	IX CARRIER	0	A-3,LN 22			0	0	0	0	0	0	0	0	0	0	0	0
28		TOTAL UNCOLLECTIBLES	0		0	0	0	0	0	0	0	0	0	0	0	0	0	0
29	7340	ALLOWANCE FOR FUNDS USED DURING CONSTRUCTION	0	A-3,LN 10	0	0	0	0	0	0	0	0	0	0	0	0	0	0

PUBLIC VERSION

2002 Copyright TIS, Inc. v1 9

PLANT SPECIFIC EXPENSE ALLOCATION

LN	A/C	DESCRIPTION	TOTAL COMPANY	SOURCE	COMMON LINE		TRAFFIC SENSITIVE					SPECIAL ACCESS					IX CATEGORY	
					LIMITED PAY	COMMON LINE	SWITCHING	INFO	COMMON TRANSPORT TERM	COMMON TRANSPORT FACILITY	DEDICATED TRANSPORT	NEL TERMINATION ALLOCATED	NEL TERMINATION TERM	CHANNEL MILEAGE TERM	CHANNEL MILEAGE FACILITY	B&C	MSG	P.L.
		BASIS FOR NETWORK SUPPORT EXPENSE																
1		GEN SUPPORT, COE, IOT AND C&WF	26,659,873	VARIOUS	0	0	16,894,348	0	9,765,525	0	0	0	0	0	0		0	0
2		EQUAL ACCESS EQUIPMENT	0	A-3,LN 8			0											
3		TOTAL	26,659,873		0	0	16,894,348	0	9,765,525	0	0	0	0	0	0		0	0
4		% DISTRIBUTION	100.0000%		0.0000%	0.0000%	63.3699%	0.0000%	36.6301%	0.0000%	0.0000%	0.0000%	0.0000%	0.0000%	0.0000%		0.0000%	0.0000%
		PLANT SPECIFIC EXPENSES																
5		GENERAL SUPPORT EXPENSE																
6	6110	NETWORK SUPPORT	0	LN 4	0	0	0	0	0	0	0	0	0	0	0		0	0
7	6120	GENERAL SUPPORT	791,595	A-3,LN 7	0	0	501,634	0	289,962	0	0	0	0	0	0		0	0
8		TOTAL GENERAL SUPPORT EXP	791,595		0	0	501,634	0	289,962	0	0	0	0	0	0		0	0
9		% DISTRIBUTION	100.0000%		0.0000%	0.0000%	63.3699%	0.0000%	36.6301%	0.0000%	0.0000%	0.0000%	0.0000%	0.0000%	0.0000%		0.0000%	0.0000%
10		CENTRAL OFFICE EXPENSE																
11	6210	CENTRAL OFFICE SWITCHING EXPENSE	850,725	A-4,LN 43	0	0	539,104	0	311,621		0	0	0	0			0	0
12	6220	OPERATOR SYSTEMS EXPENSE	0	A-4,LN 43	0	0	0	0	0		0	0	0	0			0	0
13	6230	CENTRAL OFFICE TRANSMISSION EXPENSE	0	A-4,LN 43	0	0	0	0	0		0	0	0	0			0	0
14		UNDISTRIBUTED	0	A-4,LN 43	0	0	0	0	0		0	0	0	0			0	0
15		TOTAL CENTRAL OFFICE EXPENSE	850,725		0	0	539,104	0	311,621		0	0	0	0			0	0
16		% DISTRIBUTION	100.0000%		0.0000%	0.0000%	63.3699%	0.0000%	36.6301%		0.0000%	0.0000%	0.0000%	0.0000%			0.0000%	0.0000%
17	6310	INFORMATION ORIG/TERM EXPENSE																
18		COIN PAY TELEPHONE	0	DIRECT		0												
19		COINLESS PAY TELEPHONE	0	DIRECT	0													
20		OTHER	0	DIRECT		0							0					
21		CPE	0	DIRECT		0												
22		TOTAL INFORMATION ORIG/TERM EXP	0		0	0							0					
23		% DISTRIBUTION	0.0000%		0.0000%	0.0000%							0.0000%					
24	6410	CABLE AND WIRE FACILITIES EXPENSE	11,351,188	A-5,LN 22	0	0				11,351,188	0	0	0	0	0		0	0
25		TOTAL PLANT SPECIFIC EXPENSE	12,993,508		0	0	1,040,737	0	601,583	11,351,188	0	0	0	0	0		0	0
26		% DISTRIBUTION	100.0000%		0.0000%	0.0000%	8.0097%	0.0000%	4.6299%	87.3605%	0.0000%	0.0000%	0.0000%	0.0000%	0.0000%		0.0000%	0.0000%

PUBLIC VERSION

2002 Copyright TIS, Inc. v1.9

PLANT NON SPECIFIC EXPENSE ALLOCATION

A-10,1of1

LN	A/C	DESCRIPTION	TOTAL COMPANY	SOURCE	COMMON LINE		TRAFFIC SENSITIVE					SPECIAL ACCESS				B&C	IX CATEGORY	
					LIMITED PAY	COMMON LINE	SWITCHING	INFO	COMMON TRANSPORT TERM	COMMON TRANSPORT FACILITY	DEDICATED TRANSPORT	NEL TERMINATION ALLOCATED	NEL TERMINATION TERM	CHANNEL MILEAGE TERM	CHANNEL MILEAGE FACILITY		MSG	P.L.
1		CENTRAL OFFICE EQUIPMENT	22,353,155	A-4,LN 38	0	0	14,165,183	0	8,187,972		0	0	0	0			0	0
2		INFORMATION ORIG/TERM	0	A-5,LN 10	0	0							0					
3		CABLE AND WIRE FACILITIES	0	A-5,LN 21	0	0				0	0	0	0		0		0	0
4		TOTAL	22,353,155		0	0	14,165,183	0	8,187,972	0	0	0	0	0	0		0	0
5		% DISTRIBUTION	100.0000%		0.0000%	0.0000%	63.3699%	0.0000%	36.6301%	0.0000%	0.0000%	0.0000%	0.0000%	0.0000%	0.0000%		0.0000%	0.0000%
		PLANT NONSPECIFIC EXPENSE																
6	6510	OTHER PROP PLANT & EQUIP EXPENSE	0	LN 5	0	0	0	0	0	0	0	0	0	0	0		0	0
7	6530	NETWORK OPERATIONS EXPENSE	691,931	LN 5	0	0	438,476	0	253,455	0	0	0	0	0	0		0	0
8	6540	ACCESS CHARGE EXPENSE	0	DIRECT													0	0
9	6560	DEPRECIATION EXPENSE																
10		GENERAL SUPPORT	429,900	A-3,LN 7	0	0	272,427	0	157,472	0	0	0	0	0	0		0	0
11		CENTRAL OFFICE SWITCHING EQUIPMENT	1,996,955	A-4,LN 47			1,265,469		731,486		0						0	
12		OPERATOR SYSTEMS EQUIPMENT	0	A-4,LN 44			0	0	0		0						0	
13		CENTRAL OFFICE TRANSMISSION	0	A-4,LN 48	0	0			0		0	0	0	0			0	0
14		UNDISTRIBUTED COE	0	A-4,LN 43	0	0	0	0	0		0	0	0	0			0	0
15		INFORMATION ORIG/TERM	0	A-5,LN 11	0	0							0					
16		CABLE AND WIRE FACILITIES	0	A-5,LN 22	0	0				0	0	0	0		0		0	0
17		TOTAL DEP EXP - PLANT IN SERVICE	2,426,854		0	0	1,537,896	0	888,958	0	0	0	0	0	0		0	0
18		PROPERTY HELD FOR FUTURE USE	0	A-6,LN 7	0	0	0	0	0	0	0	0	0	0	0		0	0
19		TOTAL DEPRECIATION EXPENSE	2,426,854		0	0	1,537,896	0	888,958	0	0	0	0	0	0		0	0
20		% DISTRIBUTION	100.0000%		0.0000%	0.0000%	63.3699%	0.0000%	36.6301%	0.0000%	0.0000%	0.0000%	0.0000%	0.0000%	0.0000%		0.0000%	0.0000%
		AMORTIZATION EXPENSE																
21	6563	CAPITAL LEASE	0	A-3,LN 10	0	0	0	0	0	0	0	0	0	0	0		0	0
22	6563	LEASEHOLD IMPROVEMNTS	0	A-3,LN 10	0	0	0	0	0	0	0	0	0	0	0		0	0
23	6563	UNDISTRIBUTED	0	A-3,LN 10	0	0	0	0	0	0	0	0	0	0	0		0	0
24		SUBTOTAL	0		0	0	0	0	0	0	0	0	0	0	0		0	0
25	6564	INTANGIBLE ASSETS	0	A-3,LN 10	0	0	0	0	0	0	0	0	0	0	0		0	0
26	6565	OTHER - TEL PLANT ADJUSTMENT	0	A-6,LN 28	0	0	0	0	0	0	0	0	0	0	0		0	0
27		TOTAL AMORTIZATION EXPENSE	0		0	0	0	0	0	0	0	0	0	0	0		0	0
28		% DISTRIBUTION	0.0000%		0.0000%	0.0000%	0.0000%	0.0000%	0.0000%	0.0000%	0.0000%	0.0000%	0.0000%	0.0000%	0.0000%		0.0000%	0.0000%
29		TOTAL PLANT NON SPECIFIC EXPENSE	3,118,785		0	0	1,976,372	0	1,142,412	0	0	0	0	0	0		0	0
30		% DISTRIBUTION	100.0000%		0.0000%	0.0000%	63.3699%	0.0000%	36.6301%	0.0000%	0.0000%	0.0000%	0.0000%	0.0000%	0.0000%		0.0000%	0.0000%

PUBLIC VERSION

2002 Copyright TIS, Inc. v1.9

CUSTOMER OPERATIONS EXPENSE ALLOCATION

A-11,1of1

LN	A/C	DESCRIPTION	TOTAL COMPANY	SOURCE	COMMON LINE: LIMITED PAY	COMMON LINE: COMMON LINE	TRAFFIC SENSITIVE: SWITCHING	TRAFFIC SENSITIVE: INFO	TRAFFIC SENSITIVE: COMMON TRANSPORT TERM	TRAFFIC SENSITIVE: COMMON TRANSPORT FACILITY	TRAFFIC SENSITIVE: DEDICATED TRANSPORT	SPECIAL ACCESS: NEL TERMINATION ALLOCATED	SPECIAL ACCESS: NEL TERMINATION TERM	SPECIAL ACCESS: CHANNEL MILEAGE TERM	SPECIAL ACCESS: CHANNEL MILEAGE FACILITY	B&C	IX CATEGORY: MSG	IX CATEGORY: P.L.
		CUSTOMER OPERATIONS EXPENSES																
1	6610	MARKETING	0	A-3,LN 10	0	0	0	0	0	0	0	0	0	0	0		0	0
2		TELEPHONE OPERATOR SERVICES																
3	6621	- CALL COMPLETION INCL DA	0	/VS-OPERATORS			0	0									0	
4		- OPERATOR SERVICES UNDER CONTRACT	0	DIRECT			0	0									0	
5	6622	PUBLISHED DIRECTORY LISTINGS	0	DIRECT				0										
6	6623	ALL OTHER																
7	1.0	LOCAL BUSINESS OFFICE																
8		- END USER SVC ORDER PROCESSING																
9		- PRESUBSCRIPTION	0	A-3,LN 20	0	0	0	0	0	0	0							
10		- OTHER	0	AL-1,LN 12									0			0	0	
11		- END USER PAYMENT & COLLECTION	0	AL-1,LN 13		0							0			0	0	
12		- END USER BILLING INQUIRY	0	AL-1,LN 14		0							0			0	0	
13		- IX CARRIER SVC ORDER PROCESSING	0	AL-1,LN 15	0	0	0	0	0	0	0		0			0	0	
14		- IX CARRIER PAYMENT & COLLECTION	81,403	AL-1,LN 16	0	0	51,585	0	29,818	0	0		0			0	0	
15		- IX CARRIER BILLING INQUIRY	0	AL-1,LN 17	0	0	0	0	0	0	0		0			0	0	
16		- COIN COLLECT AND ADMINISTRATION	0	AL-1,LN 18	0	0												
17		SUBTOTAL LOCAL BUSINESS OFFICE	81,403		0	0	51,585	0	29,818	0	0	0	0			0	0	
18	2.0	CUSTOMER SERVICES (REV ACCTG)																
19		- MESSAGE PROCESSING																
20		- TOLL TICKET PROCESSING	0	DIRECT												0		
21		- LOCAL MESSAGE PROCESSING	0	DIRECT												0		
22		- OTHER BILLING & COLLECTION	0	DIRECT												0		
23		- END USER COMMON LINE	0	DIRECT		0												
24		- CARRIER ACCESS BILLING (CABS)	48,215	A-3,LN 22			30,554	0	17,661	0	0	0	0	0	0	0	0	0
25		SUBTOTAL CUSTOMER SERVICES	48,215		0	0	30,554	0	17,661	0	0	0	0	0	0	0	0	0
26		TOTAL CAT 1 AND CAT 2	129,618		0	0	82,139	0	47,479	0	0	0	0	0	0	0	0	0
27		% DISTRIBUTION	100.0000%		0.0000%	0.0000%	63.3699%	0.0000%	36.6301%	0.0000%	0.0000%	0.0000%	0.0000%	0.0000%	0.0000%	0.0000%	0.0000%	0.0000%
28	3.0	ALL OTHER CUSTOMER SERVICE	0	/LN 34	0	0	0	0	0	0	0	0	0	0	0	0	0	0
29		TOTAL SERVICES EXPENSE	129,618		0	0	82,139	0	47,479	0	0	0	0	0	0	0	0	0
30		% DISTRIBUTION	100.0000%		0.0000%	0.0000%	63.3699%	0.0000%	36.6301%	0.0000%	0.0000%	0.0000%	0.0000%	0.0000%	0.0000%	0.0000%	0.0000%	0.0000%
31		TOTAL CUSTOMER OPERATIONS EXPENSE	129,618		0	0	82,139	0	47,479	0	0	0	0	0	0	0	0	0
32		% DISTRIBUTION	100.0000%		0.0000%	0.0000%	63.3699%	0.0000%	36.6301%	0.0000%	0.0000%	0.0000%	0.0000%	0.0000%	0.0000%	0.0000%	0.0000%	0.0000%
33		CUSTOMER OPERATIONS EXCL MARKETING	129,618		0	0	82,139	0	47,479	0	0	0	0	0	0	0	0	0
34		% DISTRIBUTION	100.0000%		0.0000%	0.0000%	63.3699%	0.0000%	36.6301%	0.0000%	0.0000%	0.0000%	0.0000%	0.0000%	0.0000%	0.0000%	0.0000%	0.0000%

2002 Copyright TIS, Inc. v1.9

PUBLIC VERSION

CORPORATE OPERATIONS EXPENSE ALLOCATION

A-12,1of1

LN	A/C	DESCRIPTION	TOTAL COMPANY	SOURCE	COMMON LINE: LIMITED PAY	COMMON LINE: COMMON LINE	TRAFFIC SENSITIVE: SWITCHING	TRAFFIC SENSITIVE: INFO	TRAFFIC SENSITIVE: COMMON TRANSPORT TERM	TRAFFIC SENSITIVE: COMMON TRANSPORT FACILITY	TRAFFIC SENSITIVE: DEDICATED TRANSPORT	SPECIAL ACCESS: NEL TERMINATION ALLOCATED	SPECIAL ACCESS: NEL TERMINATION TERM	SPECIAL ACCESS: CHANNEL MILEAGE TERM	SPECIAL ACCESS: CHANNEL MILEAGE FACILITY	B&C	IX CATEGORY: MSG	IX CATEGORY: P.L.
		BIG THREE EXPENSES																
1		PLANT SPECIFIC EXPENSE	12,993,508	A-9,LN 25	0	0	1,040,737	0	601,583	11,351,188	0	0	0	0	0		0	0
2		OTHER PLANT EXPENSE	0	A-10,LN 7	0	0	0	0	0	0	0	0	0	0	0		0	0
3		NETWORK OPERATIONS EXPENSE	691,931	A-10,LN 8	0	0	438,476	0	253,455	0	0	0	0	0	0		0	0
4		ACCESS CHARGE EXPENSE	0	A-10,LN 9													0	0
5		CUSTOMER OPERATIONS EXPENSE	129,618	A-11,LN 31	0	0	82,139	0	47,479	0	0	0	0	0	0	0	0	0
6		TOTAL BIG THREE EXPENSES	13,815,056		0	0	1,561,352	0	902,516	11,351,188	0	0	0	0	0	0	0	0
7		% DISTRIBUTION	100.0000%		0.0000%	0.0000%	11.3018%	0.0000%	6.5328%	82.1653%	0.0000%	0.0000%	0.0000%	0.0000%	0.0000%	0.0000%	0.0000%	0.0000%
		CORPORATE OPERATING EXPENSE																
8	6710	EXECUTIVE AND PLANNING	306,088	LN 7	0	0	34,594	0	19,996	251,499	0	0	0	0	0	0	0	0
9	6720	GENERAL AND ADMINISTRATIVE	1,317,323	LN 7	0	0	148,881	0	86,059	1,082,383	0	0	0	0	0	0	0	0
10		TOTAL CORPORATE OPERATIONS	1,623,411		0	0	183,475	0	106,055	1,333,881	0	0	0	0	0	0	0	0
11		% DISTRIBUTION	100.0000%		0.0000%	0.0000%	11.3018%	0.0000%	6.5328%	82.1653%	0.0000%	0.0000%	0.0000%	0.0000%	0.0000%	0.0000%	0.0000%	0.0000%
12		EQUAL ACCESS EXPENSE	0	DIRECT			0											
13	7500	INTEREST EXPENSE																
14		CAPITAL LEASE	0	A-3,LN 10	0	0	0	0	0	0	0	0	0	0	0	0	0	0
15		OTHER	21,740	A-3,LN 10	0	0	13,776	0	7,963	0	0	0	0	0	0	0	0	0
16		TOTAL	21,740		0	0	13,776	0	7,963	0	0	0	0	0	0	0	0	0
17		OTHER INCOME ADJUSTMENTS																
18		BASED ON PLANT	0	A-2,LN 10	0	0	0	0	0	0	0	0	0	0	0	0	0	0
19		BASED ON EXPENSE	0	LN 7	0	0	0	0	0	0	0	0	0	0	0	0	0	0
20		TOTAL	0		0	0	0	0	0	0	0	0	0	0	0	0	0	0
21		OPERATING TAXES																
22	7210	FEDERAL ITC AMORTIZATION	0	A-3,LN 10	0	0	0	0	0	0	0	0	0	0	0	0	0	0
23	7210	STATE ITC AMORTIZATION	0	A-3,LN 10	0	0	0	0	0	0	0	0	0	0	0	0	0	0
24	7240	OTHER OPERATING TAXES	124,890	A-3,LN 10	0	0	79,143	0	45,747	0	0	0	0	0	0	0	0	0
25		TOTAL OPERATING TAXES	124,890		0	0	79,143	0	45,747	0	0	0	0	0	0	0	0	0

2002 Copyright TIS, Inc. v1.9

PUBLIC VERSION

DEVELOPMENT OF JOINT USE FACILITIES ALLOCATION FACTORS

AL-1,1of1

LN	A/C	DESCRIPTION	TOTAL COMPANY	SOURCE	COMMON LINE: LIMITED PAY	COMMON LINE: COMMON LINE	TRAFFIC SENSITIVE: SWITCHING	TRAFFIC SENSITIVE: INFO	TRAFFIC SENSITIVE: COMMON TRANSPORT TERM	TRAFFIC SENSITIVE: COMMON TRANSPORT FACILITY	TRAFFIC SENSITIVE: DEDICATED TRANSPORT	SPECIAL ACCESS: NEL TERMINATION ALLOCATED	SPECIAL ACCESS: NEL TERMINATION TERM	SPECIAL ACCESS: CHANNEL MILEAGE TERM	SPECIAL ACCESS: CHANNEL MILEAGE FACILITY	B&C	IX CATEGORY: MSG	IX CATEGORY: P.L.
1		EQUIVALENT ACCESS LINES - MSG COE	0		0	0						0						
2		% DISTRIBUTION	0.0000%		0.0000%	0.0000%						0.0000%						
3		EQUIVALENT ACCESS LINES - MSG CWF	0		0	0						0						
4		% DISTRIBUTION	0.0000%		0.0000%	0.0000%						0.0000%						
5		IX CIRCUIT TERMINATIONS - MSG COE	42,793						42,793		0							
6		% DISTRIBUTION	100.0000%						100.0000%		0.0000%							
7		IX CIRCUIT MILES - MSG CWF	20,748,455							20748455.00	0.00							
8		% DISTRIBUTION	100.0000%							100.0000%	0.0000%							
		DISTRIBUTION FACTORS																
9		STD WORK SECONDS - MANUAL BOARDS	100.0000%				0.0000%	0.0000%									100.0000%	
10		STD WORK SECONDS - TSPS	100.0000%				0.0000%	0.0000%									100.0000%	
11		STD WORK SECONDS - OPERATORS	100.0000%				0.0000%	0.0000%									100.0000%	
12		END USER SVC ORDER CONTACTS	0.0000%										0.0000%			0.0000%	0.0000%	
13		END USER PAYMENT & COLLECTION	0.0000%			0.0000%							0.0000%			0.0000%	0.0000%	
14		END USER BILLING INQUIRY CONTACTS	0.0000%			0.0000%							0.0000%			0.0000%	0.0000%	
15		IX CARRIER SVC ORDER CONTACTS	100.0000%		0.0000%	0.0000%	63.3699%	0.0000%	36.6301%	0.0000%	0.0000%		0.0000%			0.0000%		
16		IX CARRIER PAYMENT & COLLECTION	100.0000%		0.0000%	0.0000%	63.3699%	0.0000%	36.6301%	0.0000%	0.0000%		0.0000%			0.0000%		
17		IX CARRIER BILLING INQUIRY CONTACTS	100.0000%		0.0000%	0.0000%	63.3699%	0.0000%	36.6301%	0.0000%	0.0000%		0.0000%			0.0000%		
18		PUBLIC TELEPHONE REVENUE	0.0000%		0.0000%	0.0000%										0.0000%		
19		END USER BILLING & COLLECTION	0.0000%														0.0000%	
20		OPERATOR SERVICES UNDER CONTRACT	0.0000%				0.0000%	0.0000%										

2002 Copyright TIS, Inc. v1.9

PUBLIC VERSION

PUBLIC VERSION

REVENUE REQUIREMENT SUMMARY

LN	ALLOCATION RATIOS		TOTAL COMPANY	ALLOCATION BASIS	INTERSTATE MSG TOLL INTRALATA	INTERSTATE MSG TOLL INTERLATA	OTHER
	REVENUE REQUIREMENT SUMMARY						
1	NET INVESTMENT FOR SETTLEMENTS		9,518,371	NOTE A	674,515	6,018,243	2,825,612
2	RATE OF RETURN				11.2500%	11.2500%	9.5000%
3	RETURN ON INVESTMENT		1,021,368	LN1*LN 2	75,883	677,052	268,433
4	ALLOWANCE FOR FUNDS USED DURING CONSTR		0	S-8,LN 29	0	0	0
5	NET RETURN FOR SETTLEMENTS		1,021,368	LN3-LN4	75,883	677,052	268,433
6	TOTAL ITC AMORTIZATION		0	S-12,LN 28+29	0	0	0
7	FEDERAL OPERATING INCOME TAX	(ACTUAL)	0	S-12,LN 30	0	0	0
8	FEDERAL OPERATING INCOME TAX	(OPTION)	510,320	LN28-LN11	37,963	338,714	133,643
9	STATE AND LOCAL INCOME TAX	(ACTUAL)	0	S-12,LN 31	0	0	0
10	STATE AND LOCAL INCOME TAX	(OPTION)	169,879	LN 33	12,637	112,754	44,488
11	PROVISION FOR DEFERRED INCOME TAX		0	S-12,LN 33	0	0	0
13	OPERATING EXPENSE AND TAX		26,537,442	S-8,LN 18	1,818,265	16,171,947	8,547,230
14	NONOPERATING EXPENSE		36,960	S-8,LN 23	2,511	22,312	12,138
15	UNCOLLECTIBLES		3,369,633	S-8,LN 28	0	0	3,369,633
16	BASIS FOR GROSS RECEIPTS TAX		31,645,602		1,947,259	17,322,778	12,375,565
17	GROSS RECEIPTS TAX RATE	(GROSS UP)			0.0000%	0.0000%	0.0000%
18	GROSS RECEIPTS TAX		0		0	0	0
19	TOTAL REVENUE REQUIREMENT		31,645,602		1,947,259	17,322,778	12,375,565

NOTE A: INCLUDES NET TEL PLANT FROM SCH S-2,LN 33 LESS A/C's 2004 ,2006 ,2007 AND 1402 OTHER THAN RTB STOCK.

	OPTIONAL GROSS UP INCOME TAX CALCULATION						
20	RETURN ON INVESTMENT		1,021,368	LN 3	75,883	677,052	268,433
21	INTEREST AND RELATED ITEMS		30,748	S-12,LN 19	2,190	19,550	9,008
22	OTHER INCOME ADJUSTMENTS		0	S-12,LN 24+25	0	0	0
23	TOTAL INCOME ADJUSTMENTS		30,748	LN 21+22	2,190	19,550	9,008
24	FEDERAL ITC AMORTIZATION		0	S-12,LN 28	0	0	0
25	FEDERAL TAXABLE INCOME		1,500,941		111,656	996,216	393,068
26	FEDERAL INCOME TAX @	34.00%	510,320	LN 25*FIT	37,963	338,714	133,643
27	FEDERAL SURTAX ALLOCATION		0	S-2,LN 34	0	0	0
28	NET FEDERAL INCOME TAX BEFORE ITC		510,320	LN26-LN27	37,963	338,714	133,643
29	STATE ITC AMORTIZATION		0	S-12,LN 29	0	0	0
30	STATE TAXABLE INCOME		1,415,660		105,312	939,613	370,735
31	STATE INCOME TAX @	12.00%	169,879	LN 30*SIT	12,637	112,754	44,488
32	STATE SURTAX EXEMPTION		0	S-2,LN 34	0	0	0
33	NET STATE INCOME TAX BEFORE ITC		169,879		12,637	112,754	44,488

2002 Copyright TIS, Inc. v1.9

S-2,1of1

SUMMARY OF NET TELEPHONE PLANT, M&S AND WORKING CAPITAL

S-2,1of1

LN	ALLOCATION RATIOS		TOTAL COMPANY	ALLOCATION BASIS	INTERSTATE MSG TOLL INTRALATA	INTERSTATE MSG TOLL INTERLATA	OTHER
	NET INVESTMENT SUMMARY						
1	GENERAL SUPPORT FACILITIES	2110	6,091,263	S-3,LN 10	433,861	3,872,857	1,784,545
2	CENTRAL OFFICE SWITCHING EQUIPMEI	2210	31,615,478	S-4,LN 52	2,251,866	20,101,289	9,262,323
3	OPERATOR SYSTEMS EQUIPMENT	2220	0	S-4,LN 41	0	0	0
4	CENTRAL OFFICE TRANSMISSION EQUIP	2230	0	S-4,LN 78	0	0	0
5	INFORMATION ORIG/TERM EQUIPMENT	2310	0	S-5,LN 17	0	0	0
6	CABLE AND WIRE FACILITIES	2410	0	S-5,LN 42	0	0	0
7	TANGIBLE ASSETS	2680	666,699	S-3,LN 29	47,487	423,891	195,321
8	INTANGIBLE ASSETS	2690	282,981	S-3,LN 36	20,156	179,921	82,904
9	TOTAL PLANT IN SERVICE A/C 2001		38,656,421		2,753,369	24,577,958	11,325,094
10	% DISTRIBUTION		100.0000%		7.1227%	63.5805%	29.2968%
11	PROPERTY HELD FOR FUTURE USE	2002	0	S-6,LN 9	0	0	0
12	PLANT UNDER CONSTR - SHORT TERM	2003	0	S-6,LN 15	0	0	0
13	PLANT UNDER CONSTR - LONG TERM	2004	0	S-6,LN 21	0	0	0
14	TELEPHONE PLANT ADJUSTMENT	2005	0	S-6,LN 27	0	0	0
15	NONOPERATING PLANT	2006	0	DIRECT			0
16	GOODWILL	2007	0	DIRECT			0
17	TOTAL PROPERTY, PLANT & EQUIPMENT		38,656,421		2,753,369	24,577,958	11,325,094
18	% DISTRIBUTION		100.0000%		7.1227%	63.5805%	29.2968%
19	ACCUM DEPRECIATION - PLANT IN SERV	3100	26,071,975	S-7,LN 18	1,857,021	16,576,700	7,638,254
20	ACCUM DEPRECIATION - FUTURE USE	3200	0	S-7,LN 19	0	0	0
21	ACCUM AMORTIZATION - TANGIBLE PRO	3400	646,918	S-7,LN 23	46,078	411,314	189,526
22	ACCUM AMORTIZATION - INTANGIBLE PF	3500	282,981	S-7,LN 24	20,156	179,921	82,904
23	ACCUM AMORTIZATION - TEL PLANT ADJ	3600	0	S-7,LN 25	0	0	0
24	OPERATING DEFERRED INCOME TAX - N	VAR	3,181,564	S-7,LN 32	226,612	2,022,856	932,097
25	OTHER DEFERRED CREDITS - NET	4360	0	S-7,LN 38	0	0	0
26	NET TELEPHONE PLANT		8,472,982		603,503	5,387,167	2,482,312
27	% DISTRIBUTION		100.0000%		7.1227%	63.5805%	29.2968%
28	MATERIALS AND SUPPLIES	1220	0	S-6,LN 31	0	0	0
29	INVESTMENT IN NONAFFILIATED CO'S	1402	0	S-6,LN 35	0	0	0
30	EQUAL ACCESS EQUIPMENT	1439	0	S-6,LN 36	0	0	0
31	OTHER JURISDICTIONAL ASSETS	1500	0	S-6,LN 37	0	0	0
32	CASH WORKING CAPITAL	XXXX	1,045,389	S-3,LN 3	71,013	631,076	343,300
33	NET TEL PLANT, M&S AND CASH WORKING CAPITAL		9,518,371		674,515	6,018,243	2,825,612
34	% DISTRIBUTION		100.0000%		7.0865%	63.2277%	29.6859%

2002 Copyright TIS, Inc. v1.9

S-8,1of1

SUMMARY OF OPERATING EXPENSE AND TAX

S-8,1of1

LN	ALLOCATION RATIOS		TOTAL COMPANY	ALLOCATION BASIS	INTERSTATE MSG TOLL INTRALATA	INTERLATA	OTHER
	OPERATING EXPENSE AND TAX SUMMARY						
1	NETWORK SUPPORT EXPENSE	6110	0	S-9,LN 7	0	0	0
2	GENERAL SUPPORT EXPENSE	6120	1,119,603	S-9,LN 8	79,746	711,850	328,008
3	CENTRAL OFFICE EXPENSE	6210	1,203,233	S-9,LN 15	85,702	765,022	352,509
4	INFORMATION ORIG/TERM EXPENSE	6310	0	S-9,LN 21	0	0	0
5	CABLE AND WIRE FACILITIES EXPENSE	6410	16,968,588	S-9,LN 25	1,148,790	10,202,397	5,617,400
6	OTHER PLANT EXPENSE	6510	0	S-10,LN 11	0	0	0
7	NETWORK OPERATIONS EXPENSE	6530	978,641	S-10,LN 13	69,705	622,225	286,711
8	ACCESS CHARGE EXPENSE	6540	0	S-10,LN 14	0	0	0
9	MARKETING EXPENSE	6610	0	S-11,LN 13	0	0	0
10	SERVICES EXPENSE	6620	241,073	S-11,LN 44	13,058	116,560	111,455
11	EXECUTIVE AND PLANNING EXPENSE	6710	455,756	S-12,LN 8+9	30,959	275,129	149,668
12	GENERAL AND ADMINISTRATIVE EXPENS	6720	1,961,453	S-12,LN 11+12	133,240	1,184,082	644,131
13	SUBTOTAL OPERATING EXPENSES		22,928,349		1,561,201	13,877,266	7,489,881
14	% DISTRIBUTION		100.0000%		6.8090%	60.5245%	0.0000%
15	DEPRECIATION AND AMORTIZATION	6560	3,432,453	S-10,LN 22+29	244,482	2,182,372	1,005,599
16	OTHER OPERATING TAX	7240	176,640	S-12,LN 32	12,581	112,308	51,750
17	EQUAL ACCESS EXPENSE		0	S-12,LN 15	0	0	0
18	TOTAL OPERATING EXPENSE AND TAX		26,537,442		1,818,265	16,171,947	8,547,230
19	% DISTRIBUTION		100.0000%		6.8517%	60.9401%	32.2082%
	NON OPERATING EXPENSE	7370					
20	ABANDONED CONSTRUCTION		0	S-2,LN 10	0	0	0
21	CONTRIBUTIONS		36,960	S-12,LN 14	2,511	22,312	12,138
22	OTHER NON OPERATING EXPENSE		0	DIRECT			0
23	TOTAL NON OPERATING EXPENSE		36,960		2,511	22,312	12,138
24	% DISTRIBUTION		100.0000%		6.7929%	60.3676%	32.8395%
	UNCOLLECTIBLES						
25	END USER MSG TOLLS	5310	0	DIRECT	0	0	0
26	END USER COMMON LINE	5320	0	DIRECT	0	0	0
27	IX CARRIER	5330	3,369,633	S-11,LN 5	0	0	3,369,633
28	TOTAL UNCOLLECTIBLES		3,369,633		0	0	3,369,633
29	ALLOWANCE FOR FUNDS USED DURING	7340	0	S-12,LN 3	0	0	0

2002 Copyright TIS, Inc. v1.9

PUBLIC VERSION

S-1,1of1

REVENUE REQUIREMENT SUMMARY

S-1,1of1

LN	DESCRIPTION	A/C	CAT	TOTAL COMPANY	ALLOCATION BASIS	ACCESS DIVISION	OTHER
	REVENUE REQUIREMENT SUMMARY						
1	NET INVESTMENT FOR SETTLEMENTS			40,433,518	NOTE A	9,518,371	30,915,148
2	RATE OF RETURN					10.7298%	9.7284%
3	RETURN ON INVESTMENT			4,028,861	LN1*LN 2	1,021,306	3,007,555
4	ALLOWANCE FOR FUNDS USED DURING CONSTR			0	S-8,LN 30	0	0
5	NET RETURN FOR SETTLEMENTS			4,028,861	LN 3-LN 4	1,021,306	3,007,555
6	TOTAL ITC AMORTIZATION			0	S-12,LN 32	0	0
7	FEDERAL OPERATING INCOME TAX		(ACTUAL)	0		0	0
8	FEDERAL OPERATING INCOME TAX		(OPTION)	2,006,664	LN28-LN11	510,288	1,496,376
9	STATE AND LOCAL INCOME TAX		(ACTUAL)	0		0	0
10	STATE AND LOCAL INCOME TAX		(OPTION)	667,994	LN 32	169,868	498,125
11	PROVISION FOR DEFERRED INCOME TAX			0	S-12,LN 36	0	0
13	OPERATING EXPENSE AND TAX			84,277,106	S-8,LN 20	26,537,442	57,739,664
14	NONOPERATING EXPENSE			558,328	S-8,LN 25	36,960	521,368
15	UNCOLLECTIBLES			3,736,000	S-8,LN 29	3,369,633	366,367
16	BASIS FOR GROSS RECEIPTS TAX			95,274,953		31,645,497	63,629,456
17	GROSS RECEIPTS TAX RATE		(GROSS UP)			0.0000%	0.0000%
18	GROSS RECEIPTS TAX			0		0	0
19	TOTAL REVENUE REQUIREMENT			95,274,953		31,645,497	63,629,456

NOTE A: INCLUDES NET TEL PLANT FROM SCH S-2,LN 33 LESS A/C's 2004 ,2006 ,2007 AND 1402.

	OPTIONAL GROSS UP INCOME TAX CALCULATION						
20	RETURN ON INVESTMENT			4,028,861	LN 3	1,021,306	3,007,555
21	INTEREST AND RELATED ITEMS			133,572	S-12,LN 22	30,748	102,824
22	OTHER INCOME ADJUSTMENTS			0	S-12,LN 27+28	0	0
23	TOTAL INCOME ADJUSTMENTS			133,572	LN 21+22	30,748	102,824
24	FEDERAL ITC AMORTIZATION			0	S-12,LN 32	0	0
25	FEDERAL TAXABLE INCOME			5,901,953		1,500,846	4,401,107
26	FEDERAL INCOME TAX	@	34.00%	2,006,664	LN 25*FIT	510,288	1,496,376
27	FEDERAL SURTAX ALLOCATION			0	S-2,LN 32	0	0
28	NET FEDERAL INCOME TAX BEFORE ITC			2,006,664	LN26-LN27	510,288	1,496,376
29	STATE TAXABLE INCOME			5,566,615		1,415,571	4,151,044
30	STATE INCOME TAX	@	12.00%	667,994	LN 29*SIT	169,868	498,125
31	STATE SURTAX EXEMPTION			0	S-2,LN 32	0	0
32	NET STATE INCOME TAX BEFORE ITC			667,994	LN30-LN31	169,868	498,125

2002 Copyright TIS, Inc. v1.9

S-2,1of1

SUMMARY OF NET TELEPHONE PLANT, M&S AND WORKING CAPITAL

S-2,1of1

LN	DESCRIPTION	A/C	CAT	TOTAL COMPANY	ALLOCATION BASIS	ACCESS DIVISION	OTHER
	NET INVESTMENT SUMMARY						
1	GENERAL SUPPORT FACILITIES	2110		18,334,666	S-3,LN 27	6,091,263	12,243,403
2	CENTRAL OFFICE SWITCHING EQUIPME	2210		56,398,286	S-4,LN 17	31,615,478	24,782,808
3	CENTRAL OFFICE TRANSMISSION EQUIF	2230		54,004,014	S-4,LN 31	0	54,004,014
4	CABLE AND WIRE FACILITIES	2410		23,377,974	S-5,LN 16	0	23,377,974
5	TANGIBLE ASSETS	2680		2,006,760	S-3,LN 54	666,699	1,340,061
6	INTANGIBLE ASSETS	2690		1,136,555	S-3,LN 61	282,981	853,574
7	TOTAL PLANT IN SERVICE A/C 2001			155,258,255		38,656,421	116,601,834
8	% DISTRIBUTION			100.0000%		24.8981%	75.1019%
9	PROPERTY HELD FOR FUTURE USE	2002		0	S-6,LN 9	0	0
10	PLANT UNDER CONSTR - SHORT TERM	2003		0	S-6,LN 15	0	0
11	PLANT UNDER CONSTR - LONG TERM	2004		0	S-6,LN 21	0	0
12	TELEPHONE PLANT ADJUSTMENT	2005		0	S-6,LN 27	0	0
13	NONOPERATING PLANT	2006		2,173,393	DIRECT		2,173,393
14	GOODWILL	2007		0	DIRECT		0
15	TOTAL PROPERTY, PLANT & EQUIPMENT			157,431,648		38,656,421	118,775,227
16	% DISTRIBUTION			100.0000%		24.5544%	75.4456%
17	ACCUM DEPRECIATION - PLANT IN SERV	3100		102,531,828	S-7,LN 30	26,071,975	76,459,853
18	ACCUM DEPRECIATION - FUTURE USE	3200		0	S-7,LN 31	0	0
19	ACCUM AMORTIZATION - TANGIBLE PRC	3400		1,947,221	S-7,LN 36	646,918	1,300,303
20	ACCUM AMORTIZATION - INTANGIBLE PI	3500		1,136,555	S-7,LN 37	282,981	853,574
21	ACCUM AMORTIZATION - TEL PLANT AD.	3600		0	S-7,LN 38	0	0
22	OPERATING DEFERRED INCOME TAX - N	VAR		12,834,933	S-7,LN 44	3,181,564	9,653,369
23	OTHER DEFERRED CREDITS - NET	4360		0	S-7,LN 49	0	0
24	NET TELEPHONE PLANT			38,981,111		8,472,982	30,508,129
25	% DISTRIBUTION			100.0000%		21.7361%	78.2639%
26	MATERIALS AND SUPPLIES	1220		261,546	S-6,LN 32	0	261,546
27	PREPAID EXPENSES	1300		0	S-6,LN 37	0	0
28	INVESTMENT IN NONAFFILIATED CO'S	1402		123,231,093	S-6,LN 38	0	123,231,093
29	OTHER JURISDICTIONAL ASSETS	1500		0	S-6,LN 39	0	0
30	CASH WORKING CAPITAL	XXXX		3,364,254	COMPUTED	1,045,389	2,318,866
31	NET TEL PLANT, M&S AND CASH WORKING CAPITAL			165,838,004		9,518,371	156,319,634
32	% DISTRIBUTION			100.0000%		5.7396%	94.2604%

2002 Copyright TIS, Inc. v1.9

S-8,1of1

SUMMARY OF OPERATING EXPENSE AND TAX

S-8,1of1

LN	DESCRIPTION	A/C	CAT	TOTAL COMPANY	ALLOCATION BASIS	ACCESS DIVISION	OTHER
	OPERATING EXPENSE AND TAX SUMMARY						
1	NETWORK SUPPORT EXPENSE	6110		209,976	S-9,LN 13-23	45,116	164,860
2	GENERAL SUPPORT EXPENSE	6120		2,958,811	S-9,LN 24-27	1,074,487	1,884,324
3	CENTRAL OFFICE EXPENSE	6210		3,353,475	S-9,LN 33	1,203,233	2,150,242
4	CABLE AND WIRE FACILITIES EXPENSE	6410		35,307,201	S-9,LN 35	16,968,588	18,338,613
5	OTHER PLANT EXPENSE	6510		5,147,773	S-10,LN 6	0	5,147,773
6	NETWORK OPERATIONS EXPENSE	6530		4,912,429	S-10,LN 13	978,641	3,933,788
7	ACCESS CHARGE EXPENSE	6540		9,387,243	S-10,LN 15	0	9,387,243
8	MARKETING EXPENSE	6610		3,145,891	S-11,LN 15	0	3,145,891
9	SERVICES EXPENSE	6620		1,621,235	S-11,LN 39	241,073	1,380,162
10	EXECUTIVE AND PLANNING EXPENSE	6710		1,128,848	S-12,LN 7	455,756	673,092
11	GENERAL AND ADMINISTRATIVE EXPEN	6720		3,810,973	S-12,LN 8-15	1,961,453	1,849,520
12	SUBTOTAL OPERATING EXPENSES			70,983,855		22,928,349	48,055,506
13	% DISTRIBUTION			100.0000%		32.3008%	67.6992%
14	DEPRECIATION - PLANT IN SERVICE	6561		12,606,651	S-10,LN 33	3,432,453	9,174,198
15	DEPRECIATION - FUTURE USE	6562		0	S-10,LN 34	0	0
16	AMORTIZATION - TANGIBLES	6563		0	S-3,LN42-44	0	0
17	AMORTIZATION - INTANGIBLES	6564		0	S-3,LN 45	0	0
18	AMORTIZATION - OTHER	6565		0	S-3,LN 46	0	0
19	OTHER OPERATING TAX	7240		686,600	S-12,LN 35	176,640	509,960
20	TOTAL OPERATING EXPENSE AND TAX			84,277,106		26,537,442	57,739,664
21	% DISTRIBUTION			100.0000%		31.4883%	68.5117%
	NON OPERATING EXPENSE	7370					
22	ABANDONED CONSTRUCTION			0	S-2,LN 8	0	0
23	CONTRIBUTIONS			101,000	S-12,LN 2	36,960	64,040
24	ALL OTHER			457,328	S-12,LN 2	0	457,328
25	TOTAL NON OPERATING EXPENSE			558,328		36,960	521,368
26	% DISTRIBUTION			100.0000%		6.6198%	93.3802%
	UNCOLLECTIBLES						
27	END USER MSG TOLLS	5310		366,367	DIRECT	XXX	366,367
28	IX CARRIER	5330		3,369,633	DIRECT	3,369,633	0
29	TOTAL UNCOLLECTIBLES			3,736,000		3,369,633	366,367
30	ALLOWANCE FOR FUNDS USED DURING	7340		0	S-12,LN 4	0	0

2002 Copyright TIS, Inc. v1.9

COS-1(P)
Filing Date: 6/24/2008
Filing Entity: Iowa Network Access Division
Transmittal Number : 26
COSA: INIAAN08

Rate-of Return TRP
Cost Analysis Summary
Test Year, 7/08 - 6/09

		Total Company (A)	Part 64 Adjustments (B)	Other Adjustments (C)	Subject to Separations (D)	Total Interstate (E)	Billing & Collection (F)
	Revenues						
100	Network Access	n/a	n/a	n/a	n/a	n/a	n/a
110	Uncollectibles	n/a	n/a	n/a	n/a	n/a	n/a
120	Common Line Support	n/a	n/a	n/a	n/a	n/a	n/a
130	Long Term	n/a	n/a	n/a	n/a	n/a	n/a
140	Transitional	n/a	n/a	n/a	n/a	n/a	n/a
150	Miscellaneous	n/a	n/a	n/a	n/a	n/a	n/a
160	Net Revenues	n/a	n/a	n/a	n/a	n/a	n/a
	Expenses						
170	Plant Specific	n/a	n/a	n/a	n/a	12,993,508	0
171	Network Support	0	0	0	0	0	0
172	General Support	1,119,603	0	0	1,119,603	791,595	0
173	Central Office	1,203,233	0	0	1,203,233	850,725	0
174	Operator Systems	0	0	0	0	0	0
175	COE Switching	1,203,233	0	0	1,203,233	850,725	0
176	COE Transmission	0	0	0	0	0	0
177	IOT	0	0	0	0	0	0
178	Cable & Wire Facilities	16,968,588	0	0	16,968,588	11,351,188	0
180	Plant Non-Sp. Less Dep/Amor	n/a	n/a	n/a	n/a	691,931	0
190	Depreciation / Amortization	3,432,453	0	0	3,432,453	2,426,854	0
200	Customer Operations	n/a	n/a	n/a	n/a	129,618	0
201	Marketing	0	0	0	0	0	0
202	Local Business Office	144,643	0	0	144,643	81,403	0
203	Revenue Accounting	96,430	0	0	96,430	48,215	0
204	Other Billing & Collection	0	0	0	0	0	0
210	Access	n/a	n/a	n/a	n/a	0	n/a
220	Corporate Operations	n/a	n/a	n/a	n/a	1,623,411	0
230	AFUDC	n/a	n/a	n/a	n/a	n/a	n/a
240	Other Exp. & Adjustments	n/a	n/a	n/a	n/a	24,823	0
250	Taxes Other than FIT	n/a	n/a	n/a	n/a	250,281	0
260	Total Exp and Other Taxes	n/a	n/a	n/a	n/a	18,140,426	0
	FIT Adjustments						
270	Adjustment for FIT	30,748	0	0	30,748	21,740	0
280	Amortized ITC	0	0	0	0	0	0
290	Federal Income Taxes	n/a	n/a	n/a	n/a	0	n/a
300	Total Expenses & Taxes	n/a	n/a	n/a	n/a	18,118,686	n/a
	Telephone Plant in Service						
310	General Support	6,091,263	0	0	6,091,263	4,306,718	0
320	Central Office Equip-Switch	31,615,478	0	0	31,615,478	22,353,155	0
321	Operator Systems	0	0	0	0	0	0
322	Tandem Switching	0	0	0	0	0	0
323	Local Switching Cat. 3	0	0	0	0	0	0
324	Equal Access	31,615,478	0	0	31,615,478	22,353,155	0
330	Central Office Equip-Trans	0	0	0	0	0	0
331	Subscriber Lines	0	0	0	0	0	0
332	Exchange Circuit	0	0	0	0	0	0
333	Interexchange Circuit	0	0	0	0	0	0
334	Host Remote	0	0	0	0	0	0
340	Cable & Wire	0	0	0	0	0	0
341	Subscriber Lines	0	0	0	0	0	0
342	Exchange	0	0	0	0	0	0
343	Interexchange	0	0	0	0	0	0
344	Host Remote	0	0	0	0	0	0
350	Info Orig/Term Equipment	0	0	0	0	0	0
360	Amortizable Assets	949,680	0	0	949,680	671,454	0
370	Total Plant In Service	38,656,421	0	0	38,656,421	27,331,327	0
	Adjustments to TPIS						
380	Depr / Amor Reserve	27,001,874	0	0	27,001,874	19,091,190	0
390	Accum Deferred Income Tax	3,181,564	0	0	3,181,564	2,249,468	0
400	Other Rate Base Adjust.	n/a	n/a	n/a	n/a	702,089	0
	Return Data						
410	Average Rate Base	n/a	n/a	n/a	n/a	6,692,758	n/a
420	Return	n/a	n/a	n/a	n/a	n/a	n/a
430	Rate of Return	n/a	n/a	n/a	n/a	n/a	n/a

PUBLIC VERSION

COS-1(P)
Filing Date: 6/24/2008
Filing Entity: Iowa Network Access Division
Transmittal Number : 26
COSA: INIAAN08

		Interstate Inter-exchange (G)	ROR Regulated I/S Access (H)	Pay Phone (I)	Inside Wire (J)	BFP (K)	Total Common Line (L)
	Revenues						
100	Network Access	n/a	19,214,471	0	0	0	0
110	Uncollectibles	n/a	0	0	0	0	0
120	Common Line Support	n/a	0	0	0	0	0
130	Long Term	n/a	0	0	0	0	0
140	Transitional	n/a	0	0	0	0	0
150	Miscellaneous	n/a	43,754	0	0	0	0
160	Net Revenues	n/a	19,258,225	0	0	0	0
	Expenses						
170	Plant Specific	0	12,993,508	0	0	0	0
171	Network Support	0	0	0	0	0	0
172	General Support	0	791,595	0	0	0	0
173	Central Office	0	850,725	0	0	0	0
174	Operator Systems	0	0	0	0	0	0
175	COE Switching	0	850,725	0	0	0	0
176	COE Transmission	0	0	0	0	0	0
177	IOT	0	0	0	0	0	0
178	Cable & Wire Facilities	0	11,351,188	0	0	0	0
180	Plant Non-Sp. Less Dep/Amor	0	691,931	0	0	0	0
190	Depreciation / Amortization	0	2,426,854	0	0	0	0
200	Customer Operations	0	129,618	0	0	0	0
201	Marketing	0	0	0	0	0	0
202	Local Business Office	0	81,403	0	0	0	0
203	Revenue Accounting	0	48,215	0	0	0	0
204	Other Billing & Collection	0	0	0	0	0	0
210	Access	0	n/a	n/a	n/a	n/a	n/a
220	Corporate Operations	0	1,623,411	0	0	0	0
230	AFUDC	n/a	0	0	0	0	0
240	Other Exp. & Adjustments	0	24,823	0	0	0	0
250	Taxes Other than FIT	0	250,281	0	0	0	0
260	Total Exp and Other Taxes	0	18,140,426	0	0	0	0
	FIT Adjustments						
270	Adjustment for FIT	0	21,740	0	0	0	0
280	Amortized ITC	0	0	0	0	0	0
290	Federal Income Taxes	n/a	372,660	0	0	0	0
300	Total Expenses & Taxes	n/a	18,491,346	0	0	0	0
	Telephone Plant in Service						
310	General Support	0	4,306,718	0	0	0	0
320	Central Office Equip-Switch	0	22,353,155	0	0	0	0
321	Operator Systems	0	0	0	0	0	0
322	Tandem Switching	0	0	0	0	0	0
323	Local Switching Cat. 3	0	0	0	0	0	0
324	Equal Access	0	22,353,155	0	0	0	0
330	Central Office Equip-Trans	0	0	0	0	0	0
331	Subscriber Lines	0	0	0	0	0	0
332	Exchange Circuit	0	0	0	0	0	0
333	Interexchange Circuit	0	0	0	0	0	0
334	Host Remote	0	0	0	0	0	0
340	Cable & Wire	0	0	0	0	0	0
341	Subscriber Lines	0	0	0	0	0	0
342	Exchange	0	0	0	0	0	0
343	Interexchange	0	0	0	0	0	0
344	Host Remote	0	0	0	0	0	0
350	Info Orig/Term Equipment	0	0	0	0	0	0
360	Amortizable Assets	0	671,454	0	0	0	0
370	Total Plant In Service	0	27,331,327	0	0	0	0
	Adjustments to TPIS						
380	Depr / Amor Reserve	0	19,091,190	0	0	0	0
390	Accum Deferred Income Tax	0	2,249,468	0	0	0	0
400	Other Rate Base Adjust.	0	702,089	0	0	0	0
	Return Data						
410	Average Rate Base	n/a	6,692,758	0	0	0	0
420	Return	n/a	745,139	0	0	0	0
430	Rate of Return	0.00%	11.13%	0.00%	0.00%	0.00%	0.00%

PUBLIC VERSION

COS-1(P)
Filing Date: 6/24/2008
Filing Entity: Iowa Network Access Division
Transmittal Number : 26
COSA: INIAAN08

		Local Switching (M)	Equal Access (N)	SS7 (O)	Information (P)	Tandem Switching (Q)	Local Transport (R)	Host Remote (S)	Total Switched Traffic Sensitive (T)	Special Access (U)
	Revenues									
100	Network Access	0	0	0	0	0	19,214,471	0	19,214,471	0
110	Uncollectibles	0	0	0	0	0	0	0	0	0
120	Common Line Support	0	n/a	n/a	n/a	n/a	n/a	n/a	n/a	n/a
130	Long Term	0	n/a	n/a	n/a	n/a	n/a	n/a	n/a	n/a
140	Transitional	0	n/a	n/a	n/a	n/a	n/a	n/a	n/a	n/a
150	Miscellaneous	0	0	0	0	0	43,754	0	43,754	0
160	Net Revenues	0	0	0	0	0	19,258,225	0	19,258,225	0
	Expenses									
170	Plant Specific	0	0	0	0	0	12,993,508	0	12,993,508	0
171	Network Support	0	0	0	0	0	0	0	0	0
172	General Support	0	0	0	0	0	791,595	0	791,595	0
173	Central Office	0	0	0	0	0	850,725	0	850,725	0
174	Operator Systems	0	0	0	0	0	0	0	0	0
175	COE Switching	0	0	0	0	0	850,725	0	850,725	0
176	COE Transmission	0	0	0	0	0	0	0	0	0
177	IOT	0	0	0	0	0	0	0	0	0
178	Cable & Wire Facilities	0	0	0	0	0	11,351,188	0	11,351,188	0
180	Plant Non-Sp. Less Dep/Amor	0	0	0	0	0	691,931	0	691,931	0
190	Depreciation / Amortization	0	0	0	0	0	2,426,854	0	2,426,854	0
200	Customer Operations	0	0	0	0	0	129,618	0	129,618	0
201	Marketing	0	0	0	0	0	0	0	0	0
202	Local Business Office	0	0	0	0	0	81,403	0	81,403	0
203	Revenue Accounting	0	0	0	0	0	48,215	0	48,215	0
204	Other Billing & Collection	0	0	0	0	0	0	0	0	0
210	Access	n/a	n/a	n/a	n/a	n/a	n/a	n/a	n/a	n/a
220	Corporate Operations	0	0	0	0	0	1,623,411	0	1,623,411	0
230	AFUDC	0	0	0	0	0	0	0	0	0
240	Other Exp. & Adjustments	0	0	0	0	0	24,823	0	24,823	0
250	Taxes Other than FIT	0	0	0	0	0	250,281	0	250,281	0
260	Total Exp and Other Taxes	0	0	0	0	0	18,140,426	0	18,140,426	0
	FIT Adjustments									
270	Adjustment for FIT	0	0	0	0	0	21,740	0	21,740	0
280	Amortized ITC	0	0	0	0	0	0	0	0	0
290	Federal Income Taxes	0	0	0	0	0	372,660	0	372,660	0
300	Total Expenses & Taxes	0	0	0	0	0	18,491,346	0	18,491,346	0
	Telephone Plant in Service									
310	General Support	0	0	0	0	0	4,306,718	0	4,306,718	0
320	Central Office Equip-Switch	0	0	0	0	0	22,353,155	0	22,353,155	0
321	Operator Systems	0	0	0	0	0	0	0	0	0
322	Tandem Switching	0	0	0	0	0	0	0	0	0
323	Local Switching Cat. 3	0	0	0	0	0	0	0	0	0
324	Equal Access	0	0	0	0	0	22,353,155	0	22,353,155	0
330	Central Office Equip-Trans	0	0	0	0	0	0	0	0	0
331	Subscriber Lines	0	0	0	0	0	0	0	0	0
332	Exchange Circuit	0	0	0	0	0	0	0	0	0
333	Interexchange Circuit	0	0	0	0	0	0	0	0	0
334	Host Remote	0	0	0	0	0	0	0	0	0
340	Cable & Wire	0	0	0	0	0	0	0	0	0
341	Subscriber Lines	0	0	0	0	0	0	0	0	0
342	Exchange	0	0	0	0	0	0	0	0	0
343	Interexchange	0	0	0	0	0	0	0	0	0
344	Host Remote	0	0	0	0	0	0	0	0	0
350	Info Orig/Term Equipment	0	0	0	0	0	0	0	0	0
360	Amortizable Assets	0	0	0	0	0	671,454	0	671,454	0
370	Total Plant In Service	0	0	0	0	0	27,331,327	0	27,331,327	0
	Adjustments to TPIS									
380	Depr / Amor Reserve	0	0	0	0	0	19,091,190	0	19,091,190	0
390	Accum Deferred Income Tax	0	0	0	0	0	2,249,468	0	2,249,468	0
400	Other Rate Base Adjust.	0	0	0	0	0	702,089	0	702,089	0
	Return Data									
410	Average Rate Base	0	0	0	0	0	6,692,758	0	6,692,758	0
420	Return	0	0	0	0	0	745,139	0	745,139	0
430	Rate of Return	0.00%	0.00%	0.00%	0.00%	0.00%	11.13%	0.00%	11.13%	0.00%

PUBLIC VERSION

COS-1(H)
Filing Date: 6/24/2008
Filing Entity: Iowa Network Access Division
Transmittal Number : 26
COSA: INIAAN08

Rate-of Return TRP
Cost Analysis Summary
Historical, Calendar Year 2007

		Total Company (A)	Part 64 Adjustments (B)	Other Adjustments (C)	Subject to Separations (D)	Total Interstate (E)	Billing & Collection (F)
	Revenues						
100	Network Access	n/a	n/a	n/a	n/a	n/a	n/a
110	Uncollectibles	n/a	n/a	n/a	n/a	n/a	n/a
120	Common Line Support	n/a	n/a	n/a	n/a	n/a	n/a
130	Long Term	n/a	n/a	n/a	n/a	n/a	n/a
140	Transitional	n/a	n/a	n/a	n/a	n/a	n/a
150	Miscellaneous	n/a	n/a	n/a	n/a	n/a	n/a
160	Net Revenues	n/a	n/a	n/a	n/a	n/a	n/a
	Expenses						
170	Plant Specific	n/a	n/a	n/a	n/a	11,812,036	0
171	Network Support	0	0	0	0	0	0
172	General Support	873,027	0	0	873,027	441,396	0
173	Central Office	748,408	0	0	748,408	378,390	0
174	Operator Systems	0	0	0	0	0	0
175	COE Switching	748,408	0	0	748,408	378,390	0
176	COE Transmission	0	0	0	0	0	0
177	IOT	0	0	0	0	0	0
178	Cable & Wire Facilities	21,284,537	0	0	21,284,537	10,992,250	0
180	Plant Non-Sp. Less Dep/Amor	n/a	n/a	n/a	n/a	511,705	0
190	Depreciation / Amortization	3,242,907	0	0	3,242,907	1,670,562	0
200	Customer Operations	n/a	n/a	n/a	n/a	100,536	0
201	Marketing	0	0	0	0	0	0
202	Local Business Office	207,391	0	0	207,391	72,436	0
203	Revenue Accounting	56,199	0	0	56,199	28,100	0
204	Other Billing & Collection	0	0	0	0	0	0
210	Access	n/a	n/a	n/a	n/a	0	n/a
220	Corporate Operations	n/a	n/a	n/a	n/a	1,605,783	0
230	AFUDC	n/a	n/a	n/a	n/a	n/a	n/a
240	Other Exp. & Adjustments	n/a	n/a	n/a	n/a	19,778	0
250	Taxes Other than FIT	n/a	n/a	n/a	n/a	82,527	0
260	Total Exp and Other Taxes	n/a	n/a	n/a	n/a	15,802,927	0
	FIT Adjustments						
270	Adjustment for FIT	188,157	0	0	188,157	95,131	0
280	Amortized ITC	0	0	0	0	0	0
290	Federal Income Taxes	n/a	n/a	n/a	n/a	0	n/a
300	Total Expenses & Taxes	n/a	n/a	n/a	n/a	15,707,796	n/a
	Telephone Plant in Service						
310	General Support	5,872,067	0	0	5,872,067	2,988,879	0
320	Central Office Equip-Switch	32,027,987	0	0	32,027,987	16,193,142	0
321	Operator Systems	0	0	0	0	0	0
322	Tandem Switching	0	0	0	0	0	0
323	Local Switching Cat. 3	0	0	0	0	0	0
324	Equal Access	32,027,987	0	0	32,027,987	16,193,142	0
330	Central Office Equip-Trans	0	0	0	0	0	0
331	Subscriber Lines	0	0	0	0	0	0
332	Exchange Circuit	0	0	0	0	0	0
333	Interexchange Circuit	0	0	0	0	0	0
334	Host Remote	0	0	0	0	0	0
340	Cable & Wire	0	0	0	0	0	0
341	Subscriber Lines	0	0	0	0	0	0
342	Exchange	0	0	0	0	0	0
343	Interexchange	0	0	0	0	0	0
344	Host Remote	0	0	0	0	0	0
350	Info Orig/Term Equipment	0	0	0	0	0	0
360	Amortizable Assets	1,067,005	0	0	1,067,005	539,471	0
370	Total Plant In Service	38,967,059	0	0	38,967,059	19,721,492	0
	Adjustments to TPIS						
380	Depr / Amor Reserve	25,461,847	0	0	25,461,847	12,873,344	0
390	Accum Deferred Income Tax	3,457,772	0	0	3,457,772	1,748,227	0
400	Other Rate Base Adjust.	n/a	n/a	n/a	n/a	519,616	0
	Return Data						
410	Average Rate Base	n/a	n/a	n/a	n/a	5,619,537	n/a
420	Return	n/a	n/a	n/a	n/a	n/a	n/a
430	Rate of Return	n/a	n/a	n/a	n/a	n/a	n/a

PUBLIC VERSION

COS-1(H)
Filing Date: 6/24/2008
Filing Entity: Iowa Network Access Divisi
Transmittal Number : 26
COSA: INIAAN08

		Interstate Inter-exchange (G)	ROR Regulated I/S Access (H)	Pay Phone (I)	Inside Wire (J)	BFP (K)	Total Common Line (L)
	Revenues						
100	Network Access	n/a	15,232,146	0	0	0	0
110	Uncollectibles	n/a	0	0	0	0	0
120	Common Line Support	n/a	0	0	0	0	0
130	Long Term	n/a	0	0	0	0	0
140	Transitional	n/a	0	0	0	0	0
150	Miscellaneous	n/a	35,934	0	0	0	0
160	Net Revenues	n/a	15,268,080	0	0	0	0
	Expenses						
170	Plant Specific	0	11,812,036	0	0	0	0
171	Network Support	0	0	0	0	0	0
172	General Support	0	441,396	0	0	0	0
173	Central Office	0	378,390	0	0	0	0
174	Operator Systems	0	0	0	0	0	0
175	COE Switching	0	378,390	0	0	0	0
176	COE Transmission	0	0	0	0	0	0
177	IOT	0	0	0	0	0	0
178	Cable & Wire Facilities	0	10,992,250	0	0	0	0
180	Plant Non-Sp. Less Dep/Amor	0	511,705	0	0	0	0
190	Depreciation / Amortization	0	1,670,562	0	0	0	0
200	Customer Operations	0	100,536	0	0	0	0
201	Marketing	0	0	0	0	0	0
202	Local Business Office	0	72,436	0	0	0	0
203	Revenue Accounting	0	28,100	0	0	0	0
204	Other Billing & Collection	0	0	0	0	0	0
210	Access	0	n/a	n/a	n/a	n/a	n/a
220	Corporate Operations	0	1,605,783	0	0	0	0
230	AFUDC	n/a	0	0	0	0	0
240	Other Exp. & Adjustments	0	19,778	0	0	0	0
250	Taxes Other than FIT	0	82,527	0	0	0	0
260	Total Exp and Other Taxes	0	15,802,927	0	0	0	0
	FIT Adjustments						
270	Adjustment for FIT	0	95,131	0	0	0	0
280	Amortized ITC	0	0	0	0	0	0
290	Federal Income Taxes	n/a	(214,193)	0	0	0	0
300	Total Expenses & Taxes	n/a	15,493,603	0	0	0	0
	Telephone Plant in Service						
310	General Support	0	2,988,879	0	0	0	0
320	Central Office Equip-Switch	0	16,193,142	0	0	0	0
321	Operator Systems	0	0	0	0	0	0
322	Tandem Switching	0	0	0	0	0	0
323	Local Switching Cat. 3	0	0	0	0	0	0
324	Equal Access	0	16,193,142	0	0	0	0
330	Central Office Equip-Trans	0	0	0	0	0	0
331	Subscriber Lines	0	0	0	0	0	0
332	Exchange Circuit	0	0	0	0	0	0
333	Interexchange Circuit	0	0	0	0	0	0
334	Host Remote	0	0	0	0	0	0
340	Cable & Wire	0	0	0	0	0	0
341	Subscriber Lines	0	0	0	0	0	0
342	Exchange	0	0	0	0	0	0
343	Interexchange	0	0	0	0	0	0
344	Host Remote	0	0	0	0	0	0
350	Info Orig/Term Equipment	0	0	0	0	0	0
360	Amortizable Assets	0	539,471	0	0	0	0
370	Total Plant In Service	0	19,721,492	0	0	0	0
	Adjustments to TPIS						
380	Depr / Amor Reserve	0	12,873,344	0	0	0	0
390	Accum Deferred Income Tax	0	1,748,227	0	0	0	0
400	Other Rate Base Adjust.	0	519,616	0	0	0	0
	Return Data						
410	Average Rate Base	n/a	5,619,537	0	0	0	0
420	Return	n/a	(320,654)	0	0	0	0
430	Rate of Return	0.00%	-5.71%	0.00%	0.00%	0.00%	0.00%

PUBLIC VERSION

COS-1(H)
Filing Date: 6/24/2008
Filing Entity: Iowa Network Access Divisi
Transmittal Number : 26
COSA: INIAAN08

		Local Switching (M)	Equal Access (N)	SS7 (O)	Information (P)	Tandem Switching (Q)	Local Transport (R)	Host Remote (S)	Total Switched Traffic Sensitive (T)	Special Access (U)
	Revenues									
100	Network Access	0	0	0	0	0	15,232,146	0	15,232,146	0
110	Uncollectibles	0	0	0	0	0	0	0	0	0
120	Common Line Support	0	n/a	n/a	n/a	n/a	n/a	n/a	n/a	n/a
130	Long Term	0	n/a	n/a	n/a	n/a	n/a	n/a	n/a	n/a
140	Transitional	0	n/a	n/a	n/a	n/a	n/a	n/a	n/a	n/a
150	Miscellaneous	0	0	0	0	0	35,934	0	35,934	0
160	Net Revenues	0	0	0	0	0	15,268,080	0	15,268,080	0
	Expenses									
170	Plant Specific	0	0	0	0	0	11,812,036	0	11,812,036	0
171	Network Support	0	0	0	0	0	0	0	0	0
172	General Support	0	0	0	0	0	441,396	0	441,396	0
173	Central Office	0	0	0	0	0	378,390	0	378,390	0
174	Operator Systems	0	0	0	0	0	0	0	0	0
175	COE Switching	0	0	0	0	0	378,390	0	378,390	0
176	COE Transmission	0	0	0	0	0	0	0	0	0
177	IOT	0	0	0	0	0	0	0	0	0
178	Cable & Wire Facilities	0	0	0	0	0	10,992,250	0	10,992,250	0
180	Plant Non-Sp. Less Dep/Amor	0	0	0	0	0	511,705	0	511,705	0
190	Depreciation / Amortization	0	0	0	0	0	1,670,562	0	1,670,562	0
200	Customer Operations	0	0	0	0	0	100,536	0	100,536	0
201	Marketing	0	0	0	0	0	0	0	0	0
202	Local Business Office	0	0	0	0	0	72,436	0	72,436	0
203	Revenue Accounting	0	0	0	0	0	28,100	0	28,100	0
204	Other Billing & Collection	0	0	0	0	0	0	0	0	0
210	Access	n/a	n/a	n/a	n/a	n/a	n/a	n/a	n/a	n/a
220	Corporate Operations	0	0	0	0	0	1,605,783	0	1,605,783	0
230	AFUDC	0	0	0	0	0	0	0	0	0
240	Other Exp. & Adjustments	0	0	0	0	0	19,778	0	19,778	0
250	Taxes Other than FIT	0	0	0	0	0	82,527	0	82,527	0
260	Total Exp and Other Taxes	0	0	0	0	0	15,802,927	0	15,802,927	0
	FIT Adjustments									
270	Adjustment for FIT	0	0	0	0	0	95,131	0	95,131	0
280	Amortized ITC	0	0	0	0	0	0	0	0	0
290	Federal Income Taxes	0	0	0	0	0	(214,193)	0	(214,193)	0
300	Total Expenses & Taxes	0	0	0	0	0	15,493,603	0	15,493,603	0
	Telephone Plant in Service									
310	General Support	0	0	0	0	0	2,988,879	0	2,988,879	0
320	Central Office Equip-Switch	0	0	0	0	0	16,193,142	0	16,193,142	0
321	Operator Systems	0	0	0	0	0	0	0	0	0
322	Tandem Switching	0	0	0	0	0	0	0	0	0
323	Local Switching Cat. 3	0	0	0	0	0	0	0	0	0
324	Equal Access	0	0	0	0	0	16,193,142	0	16,193,142	0
330	Central Office Equip-Trans	0	0	0	0	0	0	0	0	0
331	Subscriber Lines	0	0	0	0	0	0	0	0	0
332	Exchange Circuit	0	0	0	0	0	0	0	0	0
333	Interexchange Circuit	0	0	0	0	0	0	0	0	0
334	Host Remote	0	0	0	0	0	0	0	0	0
340	Cable & Wire	0	0	0	0	0	0	0	0	0
341	Subscriber Lines	0	0	0	0	0	0	0	0	0
342	Exchange	0	0	0	0	0	0	0	0	0
343	Interexchange	0	0	0	0	0	0	0	0	0
344	Host Remote	0	0	0	0	0	0	0	0	0
350	Info Orig/Term Equipment	0	0	0	0	0	0	0	0	0
360	Amortizable Assets	0	0	0	0	0	539,471	0	539,471	0
370	Total Plant In Service	0	0	0	0	0	19,721,492	0	19,721,492	0
	Adjustments to TPIS									
380	Depr / Amor Reserve	0	0	0	0	0	12,873,344	0	12,873,344	0
390	Accum Deferred Income Tax	0	0	0	0	0	1,748,227	0	1,748,227	0
400	Other Rate Base Adjust.	0	0	0	0	0	519,616	0	519,616	0
	Return Data									
410	Average Rate Base	0	0	0	0	0	5,619,537	0	5,619,537	0
420	Return	0	0	0	0	0	(320,654)	0	(320,654)	0
430	Rate of Return	0.00%	0.00%	0.00%	0.00%	0.00%	-5.71%	0.00%	-5.71%	0.00%

PUBLIC VERSION

COS-2
Filing Date: 6/24/2008
Filing Entity: Iowa Network Access Division
Transmittal Number: 26
COSA: INIAAN08
Page 7 of 29

Rate-of-Return TRP
7/08 - 6/09
Versus 2007 Actual

		Common Line (A)	Traffic Sensitive Switched (B)	Traffic Sensitive Special (C)	Other Interstate (D)	Total Interstate (E)	Total Co. Subject to Separations (F)
Forecast, 7/08 - 6/09							
	Revenue Requirement						
100	Depreciation/Amortization	0	2,426,854	0	0	2,426,854	3,432,453
105	Expense Less Dep & Amor	0	15,463,291	0	0	17,890,145	n/a
110	Taxes Less FIT	0	250,281	0	0	n/a	n/a
115	Return	0	745,139	0	n/a	n/a	n/a
120	FIT	0	372,660	0	n/a	n/a	n/a
125	Uncol., IDC & Other Adj.	0	0	0	n/a	n/a	n/a
130	Revenue Requirement	0	19,258,225	0	n/a	n/a	n/a
135	Access Service Revenue	0	19,258,225	0	n/a	n/a	n/a
	Rate Base						
140	Telephone Plant in Service	0	27,331,327	0	0	27,331,327	38,656,421
145	Rate Base Adjustments	0	702,089	0	0	702,089	n/a
150	Depreciation Reserves	0	19,091,190	0	0	19,091,190	27,001,874
155	Accum Deferred Income Tax	0	2,249,468	0	0	2,249,468	3,181,564
160	Average Rate Base	0	6,692,758	0	0	6,692,758	n/a
Actual, 1/07- 12/07							
	Revenue Requirement						
200	Depreciation/Amortization	0	1,670,562	0	0	1,670,562	3,242,907
205	Expense Less Dep & Amor	0	14,049,838	0	0	14,049,838	n/a
210	Taxes Less FIT	0	82,527	0	0	n/a	n/a
215	Return	0	(320,654)	0	n/a	n/a	n/a
220	FIT	0	(214,193)	0	n/a	n/a	n/a
225	Uncol., IDC & Other Adj.	0	0	0	n/a	n/a	n/a
230	Revenue Requirement	0	15,268,080	0	n/a	n/a	n/a
235	Access Service Revenue	0	15,268,080	0	n/a	n/a	n/a
	Rate Base						
240	Telephone Plant in Service	0	19,721,492	0	0	19,721,492	38,967,059
245	Rate Base Adjustments	0	519,616	0	0	519,616	n/a
250	Depreciation Reserves	0	12,873,344	0	0	12,873,344	25,461,847
255	Accum Deferred Income Tax	0	1,748,227	0	0	1,748,227	3,457,772
260	Average Rate Base	0	5,619,537	0	0	5,619,537	n/a

PUBLIC VERSION

COS-2
Filing Date: 6/24/2008
Filing Entity: Iowa Network Access Division
Transmittal Number: 26
COSA: INIAAN08

Rate-of-Return TRP
7/08 - 6/09
Versus 2007 Actual

		Common Line (A)	Traffic Sensitive Switched (B)	Traffic Sensitive Special (C)	Other Interstate (D)	Total Interstate (E)	Total Co. Subject to Separations (F)
Forecast, 7/07 - 6/08							
	Revenue Requirement						
100	Depreciation/Amortization	0	1,868,103	0	0	1,868,103	3,483,427
105	Expense Less Dep & Amor	0	12,981,231	0	0	12,981,231	n/a
110	Taxes Less FIT	0	197,556	0	0	n/a	n/a
115	Return	0	472,580	0	0	n/a	n/a
120	FIT	0	203,862	0	0	n/a	n/a
125	Uncol., IDC & Other Adj.	0	106,156	0	0	n/a	n/a
130	Revenue Requirement	0	15,829,488	0	0	n/a	n/a
135	Access Service Revenue	0	15,829,488	0	0	n/a	n/a
		---	---	---	---	---	---
	Rate Base	---	---	---	---	---	---
140	Telephone Plant in Service	0	20,692,613	0	0	20,692,613	38,585,253
145	Rate Base Adjustments	0	627,370	0	0	627,370	n/a
150	Depreciation Reserves	0	13,498,865	0	0	13,498,865	25,171,163
155	Accum Deferred Income Tax	0	1,838,560	0	0	1,838,560	3,428,340
160	Average Rate Base	0	5,982,558	0	0	5,982,558	n/a
Actual, 1/06 - 12/06							
	Revenue Requirement						
200	Depreciation/Amortization	0	1,326,410	0	0	1,326,410	10,075,712
205	Expense Less Dep & Amor	0	10,389,981	0	0	10,389,981	n/a
210	Taxes Less FIT	0	155,599	0	0	155,599	n/a
215	Return	0	2,329,488	0	0	2,329,488	n/a
220	FIT	0	1,200,040	0	0	1,200,040	n/a
225	Uncol., IDC & Other Adj.	0	58,722	0	0	58,722	n/a
230	Revenue Requirement	0	15,460,240	0	0	15,460,240	n/a
235	Access Service Revenue	0	15,460,240	0	0	n/a	n/a
		---	---	---	---	---	---
	Rate Base	---	---	---	---	---	---
240	Telephone Plant in Service	0	16,223,815	0	0	16,223,815	37,221,763
245	Rate Base Adjustments	0	601,518	0	0	601,518	n/a
250	Depreciation Reserves	0	10,038,284	0	0	10,038,284	23,030,507
255	Accum Deferred Income Tax	0	1,684,515	0	0	1,684,515	3,864,729
260	Average Rate Base	0	5,102,534	0	0	5,102,534	n/a

PUBLIC VERSION

COS-2
Filing Date: 6/24/2008
Filing Entity: Iowa Network Access Division
Transmittal Number: 26
COSA: INIAAN08

Rate-of-Return TRP
7/08 - 6/09
Versus 2007 Actual

		Common Line (A)	Traffic Sensitive Switched (B)	Traffic Sensitive Special (C)	Other Interstate (D)	Total Interstate (E)	Total Co. Subject to Separations (F)
Forecast, 7/06 - 6/07							
	Revenue Requirement						
100	Depreciation/Amortization	0	1,121,503	0	0	1,121,503	2,754,096
105	Expense Less Dep & Amor	0	9,063,287	0	0	9,063,287	n/a
110	Taxes Less FIT	0	137,863	0	0	n/a	n/a
115	Return	0	458,456	0	0	n/a	n/a
120	FIT	0	227,737	0	0	n/a	n/a
125	Uncol., IDC & Other Adj.	0	0	0	0	n/a	n/a
130	Revenue Requirement	0	11,008,846	0	0	n/a	n/a
135	Access Service Revenue	0	11,008,846	0	0	n/a	n/a
		---	---	---	---	---	---
	Rate Base	---	---	---	---	---	---
140	Telephone Plant in Service	0	14,178,471	0	0	14,178,471	34,818,314
145	Rate Base Adjustments	0	453,535	0	0	453,535	n/a
150	Depreciation Reserves	0	8,857,583	0	0	8,857,583	21,751,722
155	Accum Deferred Income Tax	0	1,677,033	0	0	1,677,033	4,118,320
160	Average Rate Base	0	4,097,390	0	0	4,097,390	n/a
		---	---	---	---	---	---
		---	---	---	---	---	---
		---	---	---	---	---	---
Actual, 1/05 - 12/05		---	---	---	---	---	---
	Revenue Requirement	---	---	---	---	---	---
200	Depreciation/Amortization	0	1,015,563	0	0	1,015,563	2,586,936
205	Expense Less Dep & Amor	0	7,233,741	0	0	7,233,741	n/a
210	Taxes Less FIT	0	252,224	0	0	252,224	n/a
215	Return	0	931,202	0	0	931,202	n/a
220	FIT	0	445,026	0	0	445,026	n/a
225	Uncol., IDC & Other Adj.	0	0	0	0	0	n/a
230	Revenue Requirement	0	9,877,756	0	0	9,877,756	n/a
235	Access Service Revenue	0	9,877,756	0	n/a	n/a	n/a
		---	---	---	---	---	---
	Rate Base	---	---	---	---	---	---
240	Telephone Plant in Service	0	12,303,022	0	0	12,303,022	31,339,398
245	Rate Base Adjustments	0	367,890	0	0	367,890	n/a
250	Depreciation Reserves	0	7,735,884	0	0	7,735,884	19,705,559
255	Accum Deferred Income Tax	0	1,595,678	0	0	1,595,678	4,064,658
260	Average Rate Base	0	3,339,350	0	0	3,339,350	n/a

PUBLIC VERSION

PUBLIC VERSION

MAG-1
Filing Date: 6/24/2008
Filing Entity: Iowa Network Access Division
Transmittal Number : 26
COSA: INIAAN08

Rate-of Return TRP
MAG Adjustments
Test Year, 7/08 - 6/09

Access Element	Interstate Revenue Requirement Prior to Adjustments	Local Switching Support	Sub-Total	Line Port Transfer	Universal Service Fund Contribution	Frozen TIC Revenue	Interstate Revenue Requirement Subject to TIC Re-allocation	Frozen TIC Re-allocation	Interstate Revenue Requirement Subject to Rate Making
	(A) Note 1	(B) Note 2	(C) Cols. A-B	(D) Note 3	(E) Note 4	(F) Note 5	(G) Cols. C+D+E+F	(G) Note 6	
Carrier Common Line	$0		$0	$0	$0		$0	$0	$0
Local Switching	$0	$0	$0	$0			$0	$0	$0
Information	$0		$0				$0	$0	$0
Transport	$19,214,471		$19,214,471			$0	$19,214,471	$0	$19,214,471
Special Access	$0		$0				$0	$0	$0
Total	**$19,214,471**	**$0**	**$19,214,471**	**$0**	**$0**	**$0**	**$19,214,471**	**$0**	**$19,214,471**

Factor Used for Line Port Adjustment: 0.0000%

Note 1: Source of Revenue Requirements Column (A)

Carrier Common Line	**TRP COS-1(P) Line 100, Column L**
Local Switching	**TRP COS-1(P) Line 100, Column M**
Information	**TRP COS-1(P) Line 100, Column P**
Transport	**TRP COS-1(P) Line 100, Column Q,R,S**
Special Access	**TRP COS-1(P) Line 100, Column U**

Note 2: Calculated using USAC Algorithm for Test Period
Note 3: Column C, Local Switching * Port Adjustment Factor
Note 4: Projected Amount per Account 6540
Note 5: From TRP Form MAG-2
Note 6: Distributed on Column G Totals

PUBLIC VERSION

MAG-2		Rate-of Return TRP
Filing Date:	6/24/2008	TIC Revenues
Filing Entity:	Iowa Network Access Division	Test Year, 7/08 - 6/09
Transmittal Number :	26	
COSA:	INIAAN08	

DEVELOPMENT FROZEN TIC REVENUE JULY 00 TO JUNE 01

Month	Transport Interconnection Charge Minutes Billed	Rate in Effect	Calculated Revenues
Jul-00	0	0.000000	$0
Aug-00	0	0.000000	$0
Sep-00	0	0.000000	$0
Oct-00	0	0.000000	$0
Nov-00	0	0.000000	$0
Dec-00	0	0.000000	$0
Jan-01	0	0.000000	$0
Feb-01	0	0.000000	$0
Mar-01	0	0.000000	$0
Apr-01	0	0.000000	$0
May-01	0	0.000000	$0
Jun-01	0	0.000000	$0

Total Frozen TIC Revenues **$0**
(Development based on FCC Order 01-304, Paragraph 103)

Or - Override (No Greater than Above): **$0**
(Actual TIC Revenue Used in December 17, 2001 Filing should be listed here)

Override = Actual TIC Revenues from Last Filing
(Development based on FCC Order 01-304, Paragraph 103)

Actual TIC Revenue Requirement from Filing Prior to MAG Filing in December 2001 **$0**

REV-1
Filing Date: 6/24/2008
Filing Entity: Iowa Network Access Division
Transmittal Number: 26
COSA: INIAAN08

Rate-of-Return TRP
Switched Access Revenue
Test Year, 7/08 - 6/09

	Common Line	Minute or Message Rate (A)	Minute Miles Rate (B)	Line or Trunk Rate (C)	Minute or Message Demand (D)	Minute Miles Demand (E)	Line or Trunk Demand (F)	Access Revenue (G)	Revenue Requirement (H)
100	Multi-line Business EUCL	n/a	n/a	0.00	n/a	n/a	0	0	n/a
110	Single Line Business EUCL	n/a	n/a	0.00	n/a	n/a	0	0	n/a
120	Residential EUCL	n/a	n/a	0.00	n/a	n/a	0	0	n/a
130	Special Access Surcharge	n/a	n/a	0.00	n/a	n/a	12	0	n/a
140	Terminating CCL Premium	0.000000	n/a	n/a	0	n/a	n/a	0	n/a
150	Terminating CCL Non-Prem.	0.000000	n/a	n/a	0	n/a	n/a	0	n/a
160	Originating CCL Premium	0.000000	n/a	n/a	0	n/a	n/a	0	n/a
170	Originating CCL Non-Prem.	0.000000	n/a	n/a	0	n/a	n/a	0	n/a
180	Common Line - - Total	n/a	n/a	n/a	n/a	n/a	n/a	0	0
	Information	----	----	----	----	----	----	----	----
190	Directory Assistance	0.000000	n/a	n/a	0	n/a	n/a	0	n/a
200	White Page Surcharge Prem.	0.000000	n/a	n/a	0	n/a	n/a	0	n/a
210	White Pg. Surcharge Non-Prem.	0.000000	n/a	n/a	0	n/a	n/a	0	n/a
220	Other Information	n/a	n/a	n/a	n/a	n/a	n/a	n/a	n/a
230	Information - - Total	n/a	n/a	n/a	n/a	n/a	n/a	n/a	0
	Local Switching	----	----	----	----	----	----	----	----
240	Premium	0.000000	n/a	n/a	0	n/a	n/a	0	n/a
250	Non-Premium	0.000000	n/a	n/a	0	n/a	n/a	0	n/a
260	Equal Access	n/a	n/a	n/a	n/a	n/a	n/a	n/a	n/a
270	Switching - - Total	n/a	n/a	n/a	n/a	n/a	n/a	n/a	0
	Local Transport	----	----	----	----	----	----	----	----
280	Premium LT Term.	0.008190	n/a	n/a	2,346,089,248	n/a	n/a	19,214,471	n/a
290	Non-Prem. LT Term	0.000000	n/a	n/a	0	n/a	n/a	0	n/a
300	Premium LT Facility	n/a	0.000000	n/a	n/a	0	n/a	0	n/a
310	Non-Prem. LT Facility	n/a	0.000000	n/a	n/a	0	n/a	0	n/a
320	Tandem Switching	0.000000	n/a	n/a	0	n/a	n/a	0	n/a
330	TST Termination	0.000000	n/a	n/a	0	n/a	n/a	0	n/a
340	TST Facility	n/a	0.000000	n/a	n/a	0	n/a	0	n/a
350	Premium Interconnection	0.000000	n/a	n/a	0	n/a	n/a	0	n/a
360	Non-Prem. Interconnection	0.000000	n/a	n/a	0	n/a	n/a	0	n/a
370	Installation NRC per Trunk	n/a	n/a	0.00	n/a	n/a	0	0	n/a

PUBLIC VERSION

Rate-of-Return TRP
Switched Access Revenue
Test Year, 7/08 - 6/09

	Termination Rate (A)	Circuit Rate (B)	Mileage Rate (C)	Termination Demand (D)	Circuit Demand (E)	Mileage Demand (F)	Access Revenue (G)	Revenue Requirement (H)
Local Transport (Cont.)								
380 DS3 Entrance Facility	n/a	0	n/a	n/a	0	n/a	0	n/a
390 DS3 Direct Term.	0.00	n/a	n/a	0	n/a	n/a	0	n/a
400 DS3 Direct Facility	n/a	n/a	0.00	n/a	n/a	0	0	n/a
410 DS1 Entrance Facility	n/a	0	n/a	n/a	0	n/a	0	n/a
420 DS1 Direct Term.	0	n/a	n/a	0	n/a	n/a	0	n/a
430 DS1 Direct Facility	n/a	n/a	0.00	n/a	n/a	0	0	n/a
440 VG Entrance Facility	n/a	0.00	n/a	n/a	0	n/a	0	n/a
450 VG Direct Term.	0.00	n/a	n/a	0	n/a	n/a	0	n/a
460 VG Direct Facility	n/a	n/a	0.00	n/a	n/a	0	0	n/a
470 Other Transport	n/a	n/a	n/a	n/a	n/a	n/a	0	n/a
480 Local Transport - - Total	n/a	n/a	n/a	n/a	n/a	n/a	19,214,471	19,270,037
Special - - Voice Grade	----	----	----	----	----	----	----	----
490 2-Wire Chan. Term.	n/a	0	n/a	n/a	0	n/a	0	n/a
500 4-Wire Chan. Term.	n/a	0	n/a	n/a	0	n/a	0	n/a
510 Channel Mileage Term.	0	n/a	n/a	0	n/a	n/a	0	n/a
520 Channel Mileage Facility	n/a	n/a	0.00	n/a	n/a	0	0	n/a
530 Non-Recurring	n/a	0	n/a	n/a	0	n/a	0	n/a
Special - - High Capacity	----	----	----	----	----	----	----	----
540 High Capacity Chan. Term.	n/a	0	n/a	n/a	0	n/a	0	n/a
550 Channel Mileage Term.	0	n/a	n/a	0	n/a	n/a	0	n/a
560 Channel Mileage Facility	n/a	n/a	0.00	n/a	n/a	0	0	n/a
570 Non-Recurring	n/a	0	n/a	n/a	0	n/a	0	n/a
580 Special Access - - Total	n/a	n/a	n/a	n/a	n/a	n/a	0	0

Notes: A composite special access NRC should be used if the installation rates vary among the services. If the company does not file a particular rate, then the rate and demand = 0. Col. G equals Cols. (A x D) + (B x E) + (C x F).

PUBLIC VERSION

REV-2
Filing Date: 6/24/2008
Filing Entity: Iowa Network Access Division
Transmittal Number: 26
COSA: INIAAN08

Rate-of-Return TRP
Revenues Summary
Test Year, 7/08 - 6/09

	Total Network Access (A)	Recurring without ICB (B)	Non-Recurring without ICB (C)	ICB (D)
100 Carrier Common Line	0	0	0	0
110 Special Access	0	0	0	0
120 Local Switching	0	0	0	0
130 Equal Access	0	0	0	0
140 Information	0	0	0	0
150 Local Transport	19,214,471	19,214,471	0	0
160 Total TS - Switched	19,214,471	19,214,471	0	0

Notes : Col. A = Cols. B + C + D. If a particular category is inapplicable, then that category equals O.

PUBLIC VERSION

RTE-1
Filing Date: 6/24/2008
Filing Entity: Iowa Network Access Division
Transmittal Number: 26
COSA: INIAAN08

Rate-of-Return TRP
Percent Change in
Historical Rate Levels

		7/1/2007 Rate (A)	Current Effective Rate (B)	Proposed 7/1/2008 Rate (C)	% Change 7/1/2007 7/1/2008 (D)	% Change Current 7/1/2008 7/1/2008 (E)
	Switched Access					
100	Premium CCL Term. ($/MOU)	0.00000000	0.00000000	0.00000000	0.00%	0.00%
		---	---	---	---	---
110	N.P. CCL Term. ($/MOU)	0.00000000	0.00000000	0.00000000	0.00%	0.00%
		---	---	---	---	---
120	Premium Switching ($/MOU)	0.00000000	0.00000000	0.00000000	0.00%	0.00%
		---	---	---	---	---
130	N.P. Switching ($/MOU)	0.00000000	0.00000000	0.00000000	0.00%	0.00%
		---	---	---	---	---
140	Equal Access	0.00000000	0.00000000	0.00000000	0.00%	0.00%
		---	---	---	---	---
	End User Common Line	---	---	---	---	---
150	Multi-line Business ($/Month)	0	0.00	0.00	0.00%	0.00%
		---	---	---	---	---
160	Residential & Single Line Bus.	0	0.00	0.00	0.00%	0.00%

PUBLIC VERSION

RTE-1
Filing Date: 6/24/2008
Filing Entity: Iowa Network Access Division
Transmittal Number: 26
COSA: INIAAN08

Rate-of-Return TRP
Percent Change in
Historical Rate Levels

Local Transport Rates	7/1/2007 Rate (A)	Current Effective Rate (B)	Proposed 7/1/2008 Rate (C)	% Change 7/1/2007 7/1/2008 (D)	% Change Current 7/1/2008 7/1/2008 (E)
170 Prem. LT ($/MOU, Avg. Mileage)	0.00855000	0.00855000	0.00819000	-4.21%	-4.21%
	----	----	----	----	----
180 N.P. LT ($/MOU, Avg. Mileage)	0.00000000	0.00000000	0.00000000	0.00%	0.00%
	----	----	----	----	----
190 DS1 Entr. Facility ($/Circuit)	0	0.00	0.00	0.00%	0.00%
	----	----	----	----	----
200 DS1 Direct Trunk ($/Circuit)	0	0.00	0.00	0.00%	0.00%
	----	----	----	----	----
210 Tdm Sw. Transport (($/Circuit)	0	0.00	0.00	0.00%	0.00%
	----	----	----	----	----
220 Tdm. Switching ($/Tdm. MOU)	0.000000	0.000000	0.000000	0.00%	0.00%
	----	----	----	----	----
230 Prem. Interconnection ($/MOU)	0.000000	0.000000	0.000000	0.00%	0.00%
	----	----	----	----	----
240 N.P. Interconnection ($/MOU)	0.000000	0.000000	0.000000	0.00%	0.00%
	----	----	----	----	----
250 NRC ($/Tk. Or Tks. Activated)	0.00	0.00	0.00	0.00%	0.00%
	----	----	----	----	----
260 2-Wire VG ($/Cir., Avg. Mileage)	0.00	0.00	0.00	0.00%	0.00%
	----	----	----	----	----
270 4-Wire VG ($/Cir., Avg. Mileage)	0.00	0.00	0.00	0.00%	0.00%

Notes: If Lines 170 & 180 or any other entry is inapplicable, then that rate = 0.

PUBLIC VERSION

RTE-2
Filing Date: 6/24/2008
Filing Entity: Iowa Network Access Division
Transmittal Number: 26
COSA: INIAAN08

Rate-of-Return
Revenue Price-outs
Using 2007 Demand

Switched Access	Revenue at 7/1/2007 Rates (A)	Revenue at Current Rate (B)	Change in Revenue, Cols. B-A (C)	Revenue at 7/1/2008 Rates (D)	Change in Revenue, Cols. D-B (E)
100 Multi-line Business	0	0	0	0	0
110 Residential & Single Line Bus.	0	0	0	0	0
120 Carrier Common Line	0	0	0	0	0
130 Special Access	0	0	0	0	0
140 Local Switching	0	0	0	0	0
150 Equal Access	0	0	0	0	0
160 Information	0	0	0	0	0
170 Local Transport	15,772,400	15,772,400	0	15,108,299	(664,101)

Notes: If company belongs to the NECA common line pool, then revenue = 0.

PUBLIC VERSION

RTE-3
Filing Date: 6/24/2008
Filing Entity: Iowa Network Access Division
Transmittal Number: 26
COSA: INIAAN08

Rate-of-Return TRP
COSA's for which Rates are Averaged or Pooled

COSA	Multi-line Business (A)	Residential & Single Line Business (B)	Carrier Common Line (C)
100			
110			
120			
130			
140			
150			
160			
170			
180			
190			
200			
210			
220			
230			

Notes: Companies should list all COSA's for which rates are averages or pooled.

PUBLIC VERSION

RTE-3
Filing Date: 6/24/2008
Filing Entity: Iowa Network A
Transmittal Number: 26
COSA: INIAAN08

Rate-of-Return TRP
COSA's for Which Rates are Averaged or Pooled

COSA	Local Switching (D)	Local Transport (E)	Information (F)	Equal Access (G)	Special Access (H)
100					
110					
120					
130					
140					
150					
160					
170					
180					
190					
200					
210					
220					
230					

Notes: Companies should list all COSA

PUBLIC VERSION

DMD-1
Filing Date: 6/24/2008
Filing Entity: Iowa Network Access Division
Transmittal Number: 26
COSA: INIAAN08

Rate-of-Return TRP
Common Line
Minutes-of-Use

	Historical	Premium Originating (A)	Premium Terminating (B)	Premium Total (C)	Non-Premium Originating (D)	Non-Premium Terminating (E)	Non-Premium Total (F)
100	1st Qtr. 2004	0	0	0	0	0	0
110	2nd Qtr. 2004	0	0	0	0	0	0
120	3rd Qtr. 2004	0	0	0	0	0	0
130	4th Qtr. 2004	0	0	0	0	0	0
140	1st Qtr. 2005	0	0	0	0	0	0
150	2nd Qtr. 2005	0	0	0	0	0	0
160	3rd Qtr. 2005	0	0	0	0	0	0
170	4th Qtr. 2005	0	0	0	0	0	0
180	1st Qtr. 2006	0	0	0	0	0	0
190	2nd Qtr. 2006	0	0	0	0	0	0
200	3rd Qtr. 2006	0	0	0	0	0	0
210	4th Qtr. 2006	0	0	0	0	0	0
		---	---	---	---	---	---
220	Pycos Year, 1/07 - 12/07	0	0	0	0	0	0
		---	---	---	---	---	---
230	Test Year, 7/08 - 6/09	0	0	0	0	0	0

PUBLIC VERSION

DMD-1
Filing Date: 6/24/2008
Filing Entity: Iowa Network Access Division
Transmittal Number: 26
COSA: INIAAN08

Rate-of-Return TRP
Common Line
Minutes-of-Use

Historical	Total Originating (A)	Total Terminating (B)	Grand Total (C)	Chargeable Originating (D)	Chargeable Terminating (E)
100 1st Qtr. 2004	0	0	0	0	0
110 2nd Qtr. 2004	0	0	0	0	0
120 3rd Qtr. 2004	0	0	0	0	0
130 4th Qtr. 2004	0	0	0	0	0
140 1st Qtr. 2005	0	0	0	0	0
150 2nd Qtr. 2005	0	0	0	0	0
160 3rd Qtr. 2005	0	0	0	0	0
170 4th Qtr. 2005	0	0	0	0	0
180 1st Qtr. 2006	0	0	0	0	0
190 2nd Qtr. 2006	0	0	0	0	0
200 3rd Qtr. 2006	0	0	0	0	0
210 4th Qtr. 2006	0	0	0	0	0
	---	---	---	---	---
220 Pycos Year, 1/07 - 12/07	0	0	0	0	0
	---	---	---	---	---
230 Test Year, 7/08 - 6/09	0	0	0	0	0

PUBLIC VERSION

DMD-1
Filing Date: 6/24/2008
Filing Entity: Iowa Network Access Division
Transmittal Number: 26
COSA: INIAAN08

Rate-of-Return TRP
Traffic Sensitive
Minutes-of-Use

	Historical	Premium Local Switching (A)	Non-Premium Local Switching (B)	Total Local Switching (C)	Total Chargeable Switching (D)	Total Tandem Switching* (E)	Tandem Switching Transport ** (F)
100	1st Qtr. 2004	0	0	0	0	0	227,938,330
110	2nd Qtr. 2004	0	0	0	0	0	205,631,286
120	3rd Qtr. 2004	0	0	0	0	0	244,095,598
130	4th Qtr. 2004	0	0	0	0	0	229,155,304
140	1st Qtr. 2005	0	0	0	0	0	231,594,003
150	2nd Qtr. 2005	0	0	0	0	0	230,844,481
160	3rd Qtr. 2005	0	0	0	0	0	235,545,656
170	4th Qtr. 2005	0	0	0	0	0	256,261,796
180	1st Qtr. 2006	0	0	0	0	0	321,422,883
190	2nd Qtr. 2006	0	0	0	0	0	368,994,474
200	3rd Qtr. 2006	0	0	0	0	0	395,505,512
210	4th Qtr. 2006	0	0	0	0	0	484,440,714
		---	---	---	---	---	---
220	Pycos Year, 1/07 - 12/07	0	0	0	0	0	1,844,725,157
		---	---	---	---	---	---
230	Test Year, 7/08 - 6/09	0	0	0	0	0	2,346,089,248

Notes: Local switching MOU are the same as the billable units for the interconnection charge.
* Refers to the MOU switched at a company tandem, as discussed in Part 69. 11(f-g).
** Refers to the MOU carried over non-dedicated trunks; i.e., tandem switched transport or common trunks.

PUBLIC VERSION

DMD-2
Filing Date: 6/24/2008
Filing Entity: Iowa Network Access Division
Transmittal Number: 26
COSA: INIAAN08

Rate-of-Return TRP
Special Access
Demand

	1/07 - 12/07 Channel Terminations (A)	1/07 - 12/07 Number of Circuits (B)	1/07 - 12/07 Interoffice Miles (C)	7/08 - 6/09 Channel Terminations (D)	7/08 - 6/09 Number of Circuits (E)	7/08 - 6/09 Interoffice Miles (F)
100 Metallic	0	0	0	0	0	0
110 Telegraph	0	0	0	0	0	0
120 VG less WATS	0	0	0	0	0	0
130 WATS	0	0	0	0	0	0
140 full-time Audio	0	0	0	0	0	0
150 High Capacity	0	0	0	0	0	0

PUBLIC VERSION

Rate-of-Return TRP
Common Line
Revenue and Demand

	1/07 - 12/07 Historical Revenue (A)	1/07 - 12/07 Historical MOU or Lines (B)	7/08 - 6/09 Test Year Revenue (C)	7/08 - 6/09 Test Year MOU or Lines (D)
100 End User Common Line, Total	0	0	0	0
110 Residential	0	0	0	0
120 Single Line Business	0	0	0	0
130 Multi-line Business	0	0	0	0
140 Special Access Surcharge	0	0	0	0
150 Carrier Common Line	0	0	0	0
160 Total Common Line Revenue	0	n/a	0	n/a

PUBLIC VERSION

DMD-4
Filing Date: 6/24/2008
Filing Entity: Iowa Network Access Division
Transmittal Number: 26
COSA: INIAAN08
Page 1 of 1

Rate-of-Return TRP
Minutes-of-Use
Historical vs. Forecast

			Common Line MOU (A)	Traffic Sensitive MOU (B)
100	Test Year	7/08 - 6/09	0	2,346,089,248
110	Pycos Year,	1/07 - 12/07	0	1,844,725,157
			---	---
120	Test Year	7/07 - 6/08	0	1,849,414,135
130	Pycos Year,	1/06 - 12/06	0	1,570,363,583
			---	---
140	Test Year	7/06 - 6/07	0	1,296,905,198
150	Pycos Year,	1/05 - 12/05	0	954,245,936
			---	---
160	Test Year	7/05 - 6/06	0	983,752,575
170	Pycos Year,	1/04 - 12/04	0	906,820,518

Notes: Actual operating statistics should be reported for the PYCOS years.
These data should be consistent with those in Chart DMD-4 in previous TRPs.
If a forecast was not reported for any particular test year, then enter 0.

PUBLIC VERSION

DMD-5
Filing Date: 6/24/2008
Filing Entity: Iowa Network Access Division
Transmittal Number: 26
COSA: INIAAN08
Page 1 of 1

Rate-of-Return TRP
Minutes-of-Use
Direct Trunked Transport

	1/07 - 12/07 VG (A)	1/07 - 12/07 DSI (B)	1/07 - 12/07 DS3 (C)	Test Year 7/08 - 6/09 VG (D)	Test Year 7/08 - 6/09 DS1 (E)	Test Year 7/08 - 6/09 DS3 (F)
100 Entrance Facility	0.00	0.00	0.00	0.00	0.00	0.00
110 Direct Trunked Transport	0.00	0.00	0.00	0.00	0.00	0.00

Notes: Demand should be annualized and reflect application of the percent interstate usage factor (PIU).

PUBLIC VERSION

ERN-1
Filing Date: 6/24/2008
Filing Entity: Iowa Network Access Division
Transmittal Number: 26
COSA: INIAAN08
Page 1 of 1

Rate-of-Return TRP
Rate-of-Return
Summary

	2005/2006 FCC Monitoring Period (A)	2007 Calendar Year (B)	7/08 - 6/09 Test Year (C)
100 Interstate Access, Total	38.63%	-5.71%	11.13%
110 Carrier Common Line	0.00%	0.00%	0.00%
120 Special Access	0.00%	0.00%	0.00%
130 Local Switching	0.00%	0.00%	0.00%
140 Information	0.00%	0.00%	0.00%
150 Local Transport	38.63%	-5.71%	11.13%
160 Traffic Sensitive Switched, Total	38.63%	-5.71%	11.13%

PUBLIC VERSION

Filing Entity: Iowa Network Access Division
Filing Date: 6/24/2008
Transmittal Number: 26
COSA: INIAAN08
Page 1 of 1

Rate-of-Return TRP
Base Study Factor

		Actual 2002 (A)	Actual 2003 (B)	Actual 2004 (C)	Actual 2005 (D)	Actual 2006 (E)	Prospective 2008 (F)
	Relative MOU's - Tandem Switching						
100	Interstate	-	-	-	-	-	-
110	Total Company	-	-	-	-	-	-
120	IS Factor	0.0000%	0.0000%	0.0000%	0.0000%	0.0000%	0.0000%
	Host/Remote MOU's						
130	Interstate	-	-	-	-	-	-
140	Total Company	-	-	-	-	-	-
150	IS Factor	0.0000%	0.0000%	0.0000%	0.0000%	0.0000%	0.0000%
	Host/Remote MOU Miles						
160	Interstate	-	-	-	-	-	-
170	Total Company	-	-	-	-	-	-
180	IS Factor	0.0000%	0.0000%	0.0000%	0.0000%	0.0000%	0.0000%
	Conversation Minutes						
190	Interstate	770,906,630	831,287,417	906,820,518	954,245,936	1,570,363,583	2,346,089,248
200	Total Company	1,747,291,039	1,907,091,892	2,189,105,519	2,528,561,529	3,690,091,126	3,497,658,003
210	IS Factor	44.1201%	43.5893%	41.4242%	37.7387%	42.5562%	67.0760%
	Conversation Minute Miles						
220	Interstate	92,716,700	103,506,673	119,778,486	128,384,484	223,742,058	298,410,479
230	Total Company	208,238,047	234,241,119	292,496,869	349,294,833	531,365,223	446,086,249
240	IS Factor	44.5244%	44.1881%	40.9503%	36.7553%	42.1070%	66.8952%

The above Base Study Factors apportion on the following investment:

	Part 32 Account	Part 36 Category
Relative MOU's-Tandem Switching	2210	COE Cat. 3
Host/Remote MOU's	2230	COE Cat. 4.3
Host/Remote MOU Miles	2410	C&WF Cat. 4
Conversation Minutes	2230	COE Cat. 4.23
Conversation Minutes Miles	2410	C&WF Cat. 3

PUBLIC VERSION

RORDEM-1
Filing Date: 6/24/2008
Filing Entity: Iowa Network Access Division
Transmittal Number: 26
COSA: INIAAN08

Rate-of-Return TRP
Verification of WDEM

Year	Interstate DEM MOU (A)	Intrastate DEM MOU (B)	Local DEM MOU (C)	Total DEM MOU (D)	Interstate MDEM Factor (E)	No. of Switched Access Lines (F)	Part 36.125(e) Historical Weighting (G)	Interstate WDEM Factor (H)
2000	-	-	-	-	0.0000%	-	0	0.0000%
2001	-	-	-	-	0.0000%	-	0	0.0000%
2002	-	-	-	-	0.0000%	-	0	0.0000%
2003	-	-	-	-	0.0000%	-	0	0.0000%
2004	-	-	-	-	0.0000%	-	0	0.0000%
2005	-	-	-	-	0.0000%	-	0	0.0000%
2006	-	-	-	-	0.0000%	-	0	0.0000%

PUBLIC VERSION

Exhibit 18

INS 2010 Tariff Filing
(filed June 16, 2010)

VENABLE® LLP

575 SEVENTH STREET NW WASHINGTON, DC 20004
T 202.344.4000 F 202.344.8300 www.Venable.com

Filed Pursuant to
§ 204(a)(3) of the
Communications Act
on 15 Days' Notice

June 16, 2010

SUBMITTED ELECTRONICALLY

Marlene H. Dortch
Office of the Secretary
Federal Communications Commission
445 Twelfth Street, S.W.
Washington, D.C. 20554

Attention: Wireline Competition Bureau

Re: Iowa Network Services, Inc. FRN: 0002-5807-10
Tariff F.C.C. No. 1
July 1, 2010 Annual Access Charge Tariff Filing

Dear Ms. Dortch:

The accompanying 2010 Annual Access Charge Tariff Filing of Iowa Network Services, Inc. ("INS") is sent to you for filing in compliance with the requirements of the Communications Act of 1934, as amended.

This 2010 Annual Access Tariff Filing is filed in accordance with the procedures set forth in *July 1, 2010 Annual Access Charge Tariff Filings, Order*, 25 FCC Rcd 2867 (2010) (the "*Tariff Order*") and includes cost support required by *Material to be Filed in Support of 2010 Annual Access Tariff Filings*, *Tariff Review Plans*, 25 FCC Rcd 2872 (2010). Pursuant to the attached study for the test period ending June 30, 2011, INS proposes to maintain its existing switched transport rate of $0.00819 per access minute.

As required by the *Tariff Order*, INS is submitting its 2010 Annual Tariff Review Plan and associated documents electronically, using the Commission's Electronic Tariff Filing System ("ETFS"). Since INS is not proposing any new or revised rates or regulations at this time, no tariff pages are included with this filing. A filing fee is not required to be submitted with this submission, as set forth in Section 61.15(f) of the Commission's rules, 47 C.F.R. § 61.15(f).

VENABLE LLP

All personal or facsimile correspondence and inquires in connection with this publication should be addressed to Mr. Aaron D. Beckerman, Manager of Rates & Tariffs, Iowa Network Services, Inc., 4201 Corporate Drive, West Des Moines, IA 50266-5906, Telephone: (800) 469-4000; Facsimile: (515) 830-0123. Additional copies should be directed to Iowa Network Services, Inc.'s counsel, James U. Troup, Venable LLP, 575 7th Street, N.W., Washington, DC 20004-1601, Telephone: (202) 344-8066; Facsimile: (202) 344-8300.

Acknowledgement and date of receipt of this filing is requested. A duplicate copy of this letter is provided for this purpose.

Should you have any questions concerning this matter, please contact James U. Troup at (202) 344-8066.

Sincerely,

James U. Troup

Counsel for
Iowa Network Services, Inc.

Attachments

IOWA NETWORK SERVICES, INC.

IOWA NETWORK ACCESS DIVISION

DESCRIPTION AND JUSTIFICATION

COST SUPPORT MATERIAL

TARIFF REVIEW PLAN

JULY 1, 2010 ANNUAL ACCESS CHARGE TARIFF FILING

JUNE 16, 2010

IOWA NETWORK ACCESS DIVISION

INTERSTATE ACCESS TARIFF FILING

PROSPECTIVE PERIOD
JULY 1, 2010 - JUNE 30, 2011

INDEX

Section	Description
	Transmittal Letter
1	Introduction, Overview and Rate Development
2	Development of Switched Transport Charge and Study Period Projected Access Minutes
3	Projected Revenue Requirement Summary - Total Interstate (Part 69)
4	Projected Part 36 Revenue Requirement Summary
5	Projected Part 64 Revenue Requirement Summary
6	Tariff Review Plan (TRP)

IOWA NETWORK ACCESS DIVISION

INTRODUCTION, OVERVIEW AND RATE DEVELOPMENT

INTRODUCTION

This filing supports the Iowa Network Access Division Tariff F.C.C. No. 1 in accordance with , July 1, 2010 Annual Access Charge Tariff Filings, Order, 25 FCC Rcd 2867 (released Mar. 31, 2010). That Order establishes procedures for the 2010 filing of annual access charge tariffs and Tariff Review Plans (TRPs) for local exchange carriers (LECs) subject to price caps and those carriers subject to Section 61.38 of the Commission's rules. The requirements for summary cost support material to support the annual access charge filings to be submitted on or before June 16, 2010 are presented in Material to be Filed in Support of 2010 Annual Access Tariff Filings, Tariff Review Plans, 25 FCC Rcd 2872 (released Mar. 31, 2010).

This 2010 Annual Access Charge Tariff Filing covers the scheduled effective period from July 1, 2010 through June 30, 2012. This documentation volume contains the introduction, overview, rate development narrative, access rate development and corresponding cost support material to be filed with the FCC on June 16, 2010.

OVERVIEW

Schedule A of Section 2 presents a summary of the proposed rate to be effective July 1, 2010. Iowa Network Access Division ("INAD") proposes to maintain its existing switched transport rate of $0.00819 per minute of use effective July 1, 2010 even though its costs support a higher rate of $0.00822 per minute of use. The Company's proposed switched transport rate of $0.00819 per access minute is projected to generate switched transport revenues of $28,516,102. When combined with nonrecurring revenues of $41,058, total revenues are projected in the amount of $28,557,160 resulting in a return of 10.25% on interstate investments for the projected twelve-month period ending June 30, 2011.

For the year 2009, INAD's interstate access revenues amounted to $24,465,095 which resulted in a negative return of 10.78% on its interstate investment. For the 2007/2008 monitoring period, INAD experienced a return of negative 5.75%. During this period, the FCC authorized a maximum rate of return for interstate access operations of 11.50% with a target of 11.25%.

Interstate access minutes grew at a rate of 37.37% during 2009 to 2,982,269,940 from 2,171,054,422 in 2008. During the year 2008, INAD recorded interstate traffic growth of 17.69% over the year 2007. For the test period ending June 30, 2011, INAD is projecting

interstate access minutes of 3,481,819,561, representing an increase of 17.21% over projected access minutes of 2,970,603,151 for the projected period ending June 30, 2010 and an increase of 16.75% compared with actual interstate access minutes for the year 2009. INAD changed its procedures for identifying Percent Interstate Use ("PIU") ratios du ring the year 2008 using enhanced switching and billing software. INAD's procedures for identifying interstate traffic terminating over its equal access network employ methods and procedures that conform with industry standards.

Since 2000, Iowa Network Services, Inc. ("INS") has implemented a state of the art fiber network throughout the state of Iowa that is being used to provide equal access services to interexchange carriers serving nearly all rural Independent Local Exchange Carriers (ILECs) in the state. This state of the art network provides full switching and transport redundancy for interexchange carriers serving rural Iowa. As this network ages, INS has plans to upgrade its fiber routes and electronics to bring newer technologies and increased capacity in areas where needed. Approximately $20 million has been expended since 2006 and an additional $4.5 million is planned for 2010.

During 2007, INAD began to experience an increase in its uncollectible revenues from an Interexchange Carrier ("IXC") as a result of billing disputes over the classification and quantification of interstate access minutes related to traffic terminated by the IXC to ILEC customer locations in Iowa. The disputed traffic is being terminated by the IXC to ILEC customer locations in Iowa using the equal access network of INAD. During the year 2009, INAD recorded a provision for uncollectibles relating to the interstate billing for this traffic in the amount of $3,467,168. INAD continues to bill the IXC for all traffic terminated over its network and has included this disputed traffic in its minute of use and revenue projections for the twelve month period ending June 30, 2011. The interstate provision for uncollectibles related to this traffic is estimated to be $2,893,575 and is reflected in INAD's cost of operations for the projected period ending June 30, 2011.

INAD's proposed tariff rate of $0.00819 is targeted to generate a return of 10.25% on investment for the projected test period ended June 30, 2011. INAD's cost support material has been developed using procedures prescribed by the Federal Communications Commission as follows:

A) Financial reporting is in accordance with the Uniform Systems of Accounts and Financial Reporting Requirements of Class A and Class B Telephone Companies, CC Docket 78-196 (Part 32 Order) and all subsequent revisions to the rules adopted through the period June 15, 2010.

B) Jurisdictional allocation is in accordance with Federal Communications Commission's Rules adopted in CC Docket Nos. 78-72, 80-286, 86-297 and FCC Docket 87-134 released August 18, 1987 (Part 36 Order) and all subsequent revisions to the rules adopted through the period June 15, 2010.

C) Access rate development is performed in accordance with CC Docket No. 87-113 released August 18, 1987 (Part 69 Conformance Notice) and subsequent modifications including CC Docket No. 00-256, Second Report and Order and Notice of Proposed Rulemaking, 16 FCC Rcd 19613 (2001), ("Rate-of-Return Access Charge Reform Order").

The proposed access service tariff maintains the method of charging for interstate access by major rate element. INAD proposes to maintain its current centralized equal access switched transport rate of $0.00819 and anticipates this rate will remain in effect through June 30, 2012.

RATE DEVELOPMENT

Development of cost support as contained in the tariff filing was accomplished as follows:

1) Projection of test period investment, revenue and expense was determined based on the best estimates of management using fixed, known and measurable amounts from INAD's 2010 and 2011 operating budgets. Anticipated changes in investments and reserves were reflected in conjunction with INAD's ongoing construction and modernization programs. Revenues were increased to reflect the projected increase in access minutes during the test period over the year 2009.

2) Projection of the test period INAD revenue requirement was accomplished using FCC Part 64 cost allocation procedures applied to total company projected investment and expense amounts determined in (1) above. INAD's revenue requirement summary data is contained in Section 5 of the cost support material.

3) Projection of the test period interstate access revenue requirement was accomplished using Parts 36/69 separation procedures applied to projected total INAD investment and expense amounts determined in (2) above. INAD's interstate access revenue requirement was determined using a return on investment of 11.25% which reflects the rate of return currently authorized by the FCC for interstate ratemaking purposes. The summary Part 36 and Part 69 revenue requirements are contained in Sections 3 and 4 of the cost support material.

4) Projected interstate access minutes for the period ending June 30, 2010 reflect an increase of 16.75% over interstate access minutes for the historical period January 1, 2009 through December 31, 2009. Interstate access minutes for the period ending June 30, 2011 are projected to be 3,481,819,561 compared to 2,970,603,151 for the projected period ending June 30, 2010 and 2,982,269,940 for the actual period ended December 31, 2009. Projected access minutes for the test period ending June 30, 2011 are presented on Schedule B following. The

increase in projected access minutes for the test period ending June 30, 2011 appears to be consistent with increases in prior years.

5) INAD's interstate access revenue requirement determined in (3) above for the projected period ending June 30, 2011 amounts to $28,671,481 and is presented in Section 3 of the cost support material. The interstate revenue requirement was reduced by the amount of projected interstate revenues from nonrecurring charges of $41,058 to arrive at the amount of $28,630,423 representing the target revenue requirement to be recovered from the recurring centralized equal access switched transport rate.

6) The allowable projected switched transport charge supported by the projected costs of INAD is determined by dividing the remaining interstate revenue requirement of $28,630,423 determined in (5) above by projected access minutes of 3,481,819,561 determined in (4) above resulting in a cost of $0.00822 per access minute. An analysis of the development of the allowable interstate switched transport rate is presented on Schedule A in Section 2. In lieu of implementing its supported rate of $0.00822, INAD proposes to maintain its existing interstate switched transport rate of $0.00819.

SUMMARY

The 2010 annual access tariff filing is supplemented by the enclosed cost support material. Schedule A reflects INAD's existing switched transport charge of $0.00819 compared with the supported rate of $0.00822. Through this filing, INAD proposes to maintain its existing switched transport charge of $0.00819 until June 30, 2012. The proposed switched transport charge will produce revenues that will generate a rate of return on investment of 10.25 % for the test period ended June 30, 2011.

Included in the cost support material are schedules depicting projected investment and expense data, demand quantities, jurisdictional cost allocations and rate calculations for the twelve-month period ending June 30, 2011. Cost and revenue data for the historical period from January 1 through December 31, 2009 is contained in the Company's Tariff Review Plan (TRP) which has been filed under separate cover.

This filing is presented to comply with the Commission's Orders in July 1, 2010 Annual Access Tariff Filings, 25 FCC Rcd 2867 (Mar. 31, 2010) and Material to be Filed in Support of 2010 Annual Access Tariff Filings, 25 FCC Rcd 2872 (Mar. 31, 2010) establishing the TRP schedules to be filed in support of the annual access charge tariff filing. With this filing, INAD proposes to maintain its switched transport charge of $0.00819 effective July 1, 2010 through June 30, 2012.

TARIFF REVIEW PLAN

INDEX

RORCOS-1(P)	Page 1 of 4
RORCOS-1(P)	Page 2 of 4
RORCOS-1(P)	Page 3 of 4
RORCOS-1(P)	Page 4 of 4
RORCOS-1(H)	Page 1 of 4
RORCOS-1(H)	Page 2 of 4
RORCOS-1(H)	Page 3 of 4
RORCOS-1(H)	Page 4 of 4
RORCOS-2	Page 1 of 3
RORCOS-2	Page 2 of 3
RORCOS-2	Page 3 of 3
RORMAG-1	Page 1 of 1
RORMAG-2	Page 1 of 1
RORREV-1	Page 1 of 2
RORREV-1	Page 2 of 2
RORREV-2	Page 1 of 1
RORRTE-1	Page 1 of 2
RORRTE-1	Page 2 of 2
RORRTE-2	Page 1 of 1
RORRTE-3	Page 1 of 2
RORRTE-3	Page 2 of 2
RORDMD-1	Page 1 of 3
RORDMD-1	Page 2 of 3
RORDMD-1	Page 3 of 3
RORDMD-2	Page 1 of 1
RORDMD-3	Page 1 of 1
RORDMD-4	Page 1 of 1
RORDMD-5	Page 1 of 1
RORERN-1	Page 1 of 1
RORBSF-1	Page 1 of 1
RORDEM-1	Page 1 of 1
61.38 ACR-1 Historical	Page 1 of 1
61.38 ACR-1 Projected	Page 1 of 1
Certification	

CERTIFICATION

I certify that I am the Vice President Finance of Iowa Network Services, Inc. and am authorized to deal with matters involving the interstate access tariff filing of Iowa Network Access Division; that I have examined the foregoing Tariff Review Plan; statements of fact contained in this Tariff Review Plan are true and this report is a correct statement of the business and affairs of the above named respondent in respect to each and every matter set forth therein during the period from July 1, 2010 to June 30, 2011.

June 16, 2010
Date

Dennis M. Creveling
Dennis M. Creveling
IOWA NETWORK SERVICES, INC.

[1] The term call aggregator refers to businesses that generate high-volume traffic, such as conference call companies, chat line providers, and fax broadcasters.

IOWA NETWORK SERVICES, INC.
IOWA NETWORK ACCESS DIVISION
INTERSTATE ACCESS RATE DEVELOPMENT

SECTION 2
SCHEDULE A

PROJECTED TEST PERIOD ENDED 6/30/2011

		SOURCE	CURRENT RATE	COST SUPPORT	DIFFERENCE
1	SWITCHED TRANSPORT RATE	(BELOW)	$0.00819	$0.00822	$0.00003
2	STUDY PERIOD ACCESS MINUTES	SCHEDULE B	3,481,819,561	3,481,819,561	
3	STUDY PERIOD ACCESS REVENUE	LN 1*LN 2	$28,516,102	$28,620,557	$104,455

	ACCESS RATE DEVELOPMENT	SOURCE	AMOUNT
4	PROJECTED REVENUE REQUIREMENT	SECTION 4	$28,671,481
5	LESS: MISCELLANEOUS REVENUE	RECORDS	41,058
7	ACCESS REVENUE REQUIREMENT	LN 4-LN 5	$28,630,423
8	PROJECTED ACCESS MINUTES	SCHEDULE B	3,481,819,561
9	PROJECTED ACCESS RATE PER MOU	LN 4/LN 5	$0.00822

PUBLIC VERSION

AUREON_01288

IOWA NETWORK SERVICES, INC.
IOWA NETWORK ACCESS DIVISION
EQUAL ACCESS MOU SUMMARY

SECTION 2
SCHEDULE B

PROJECTED TEST PERIOD ENDED 6/30/2011

PRO FORMA ALL CARRIERS	DAYS	INTERSTATE INTRALATA ORIGINATING MINUTES	INTERSTATE INTRALATA TERMINATING MINUTES	INTERSTATE INTRALATA REVENUES	INTERSTATE INTERLATA ORIGINATING MINUTES	INTERSTATE INTERLATA TERMINATING MINUTES	INTERSTATE INTERLATA REVENUES	TOTAL MINUTES	TOTAL REVENUES
7/1/2010 - 7/31/2010	31	385,882	1,123,513	$12,361.95	33,473,303	228,690,817	$2,147,124.15	263,673,516	$2,159,486.09
8/1/2010 - 8/31/2010	31	366,400	1,204,908	$12,869.01	43,199,447	245,836,204	$2,367,201.98	290,606,958	$2,380,070.99
9/1/2010 - 9/30/2010	30	378,932	1,172,848	$12,709.07	38,620,806	239,023,853	$2,273,909.76	279,196,439	$2,286,618.83
10/1/2010 - 10/31/2010	31	396,798	1,228,146	$13,308.29	40,441,722	250,293,481	$2,381,121.31	292,360,146	$2,394,429.60
11/1/2010 - 11/30/2010	30	387,966	1,200,810	$13,012.07	39,541,567	244,722,432	$2,328,122.16	285,852,775	$2,341,134.23
12/1/2010 - 12/31/2010	31	404,121	1,250,812	$13,553.90	41,188,099	254,912,802	$2,425,066.38	297,755,834	$2,438,620.28
1/1/2011 - 1/31/2011	31	406,912	1,259,452	$13,647.53	41,472,610	256,673,640	$2,441,817.79	299,812,615	$2,455,465.32
2/1/2011 - 2/28/2011	28	369,706	1,144,295	$12,399.67	37,680,576	233,204,774	$2,218,551.01	272,399,351	$2,230,950.68
3/1/2011 - 3/31/2011	31	411,252	1,272,883	$13,793.06	41,914,867	259,410,766	$2,467,856.93	303,009,767	$2,481,650.00
4/1/2011 - 4/30/2011	30	399,832	1,237,536	$13,410.04	40,750,933	252,207,185	$2,399,326.98	294,595,485	$2,412,737.02
5/1/2011 - 5/31/2011	31	414,831	1,283,961	$13,913.11	42,279,673	261,668,549	$2,489,335.94	305,647,015	$2,503,249.05
6/1/2011 - 6/30/2011	30	402,972	1,247,258	$13,515.38	41,071,049	254,188,382	$2,418,174.73	296,909,660	$2,431,690.12
TOTAL		4,725,603	14,626,422	$158,493.08	481,634,652	2,980,832,885	$28,357,609.12	3,481,819,561	$28,516,102.21
3rd QUARTER		1,131,213	3,501,268	$37,940.03	115,293,557	713,550,873	$6,788,235.89	833,476,912	$6,826,175.91
4th QUARTER		1,188,884	3,679,768	$39,874.26	121,171,387	749,928,716	$7,134,309.84	875,968,755	$7,174,184.11
1st QUARTER		1,187,870	3,676,630	$39,840.26	121,068,053	749,289,180	$7,128,225.74	875,221,733	$7,168,065.99
2nd QUARTER		1,217,635	3,768,755	$40,838.54	124,101,655	768,064,116	$7,306,837.66	897,152,161	$7,347,676.20
TOTAL COMPANY		4,725,603	14,626,422	$158,493.08	481,634,652	2,980,832,885	$28,357,609.12	3,481,819,561	$28,516,102.21

PUBLIC VERSION

AUREON_01289

INDEX TO DETAIL PART 69 ALLOCATION FORMS

DESCRIPTION	SCHEDULE
REVENUE REQUIREMENT SUMMARY, INCOME TAXES	A-1
SUMMARY OF TELEPHONE PLANT AND RESERVES	A-2
GENERAL SUPPORT FACILITIES AND MISC PLANT ALLOCATION	A-3
OPERATOR SYSTEMS AND SWITCHING EQUIPMENT	A-41
CENTRAL OFFICE TRANSMISSION EQUIPMENT	A-42
INFORMATION ORIG/TERM AND CABLE AND WIRE FACILITIES	A-5
OTHER TELECOMMUNICATIONS PLANT ALLOCATION	A-6
ACCUMULATED DEPRECIATION, AMORT & DEFERRED INCOME TAXES	A-7
SUMMARY OF OPERATING EXP AND TAX AND MISC TAX ITEMS	A-8
PLANT SPECIFIC EXPENSE ALLOCATION	A-9
PLANT NONSPECIFIC EXPENSE ALLOCATION	A-10
CUSTOMER OPERATIONS EXPENSE ALLOCATION	A-11
CORPORATE OPERATIONS EXPENSE ALLOCATION	A-12
JOINT USE FACILITIES ALLOCATION FACTORS	AL-1

PUBLIC VERSION

AUREON_01290

PROPRIETARY INFORMATION

2002 Copyright TIS, Inc. v1.9

SUMMARY OF REVENUE REQUIREMENT BY ACCESS ELEMENT

					COMMON LINE		TRAFFIC SENSITIVE					SPECIAL ACCESS					IX CATEGORY	
									COMMON TRANSPORT		DEDICATED	NEL TERMINATION		CHANNEL MILEAGE				
LN	A/C	DESCRIPTION	TOTAL COMPANY	SOURCE	LIMITED PAY	COMMON LINE	SWITCHING	INFO	TERM	FACILITY	TRANSPORT	ALLOCATED	TERM	TERM	FACILITY	B&C	MSG	P.L.
1		NET INVESTMENT FOR SETTLEMENTS	7,534,959	(NOTE A)	0	0	5,038,917	0	2,496,042	0	0	0	0	0	0	0	0	0
2		RATE OF RETURN	11.2500%		11.2500%	11.2500%	11.2500%	11.2500%	11.2500%	11.2500%	11.2500%	11.2500%	11.2500%	11.2500%	11.2500%	11.2500%	11.2500%	11.2500%
3		RETURN ON INVESTMENT	847,683	LN 1*LN 2	0	0	566,878	0	280,805	0	0	0	0	0	0	0	0	0
4		ALLOW FOR FUNDS USED DURING CONSTR	0	A-8,LN 29	0	0	0	0	0	0	0	0	0	0	0	0	0	0
5		NET RETURN FOR SETTLEMENTS	847,683	LN 3-LN 4	0	0	566,878	0	280,805	0	0	0	0	0	0	0	0	0
6		FEDERAL OPERATING INCOME TAX - ACTUAL	0	RECORDS	0	0	0	0	0	0	0	0	0	0	0	0	0	0
7		FEDERAL OPERATING INCOME TAX - OPTION	436,685	LN 30	0	0	292,028	0	144,657	0	0	0	0	0	0	0	0	0
8		FEDERAL ITC AMORTIZATION	0	A-12,LN 22	0	0	0	0	0	0	0	0	0	0	0	0	0	0
9		STATE OPERATING INCOME TAX - ACTUAL	0	RECORDS	0	0	0	0	0	0	0	0	0	0	0	0	0	0
10		STATE OPERATING INCOME TAX - OPTION	145,367	LN 36	0	0	97,213	0	48,155	0	0	0	0	0	0	0	0	0
11		STATE ITC AMORTIZATION	0	A-12,LN 23	0	0	0	0	0	0	0	0	0	0	0	0	0	0
12		PROVISION FOR DEFERRED INCOME TAX	0	RECORDS	0	0	0	0	0	0	0	0	0	0	0	0	0	0
13		OPERATING EXPENSE & OTHER TAXES	24,229,425	A-8,LN 18	0	0	5,038,670	0	2,495,919	16,694,836	0	0	0	0	0	0	0	0
14		NONOPERATING EXP	118,746	A-8,LN 23	0	0	79,410	0	39,336	0	0	0	0	0	0	0	0	0
15		UNCOLLECTIBLES	2,893,575	A-8,LN 28	0	0	1,935,045	0	958,530	0	0	0	0	0	0	0	0	0
16		BASIS FOR GROSS RECEIPTS TAX	28,671,481		0	0	8,009,243	0	3,967,401	16,694,836	0	0	0	0	0	0	0	0
17		GROSS RECEIPTS TAX RATE	0.0000%		0.0000%	0.0000%	0.0000%	0.0000%	0.0000%	0.0000%	0.0000%	0.0000%	0.0000%	0.0000%	0.0000%	0.0000%	0.0000%	0.0000%
18		GROSS RECEIPTS TAX	0	LN16*LN17	0	0	0	0	0	0	0	0	0	0	0	0	0	0
19		TOTAL REVENUE REQUIREMENT	28,671,481	LN16+LN18	0	0	8,009,243	0	3,967,401	16,694,836	0	0	0	0	0	0	0	0

NOTE A: INCLUDES A-2,LN 31 LESS A/C 2004, TPUC - LONG TERM

		OPTIONAL GROSS UP INCOME TAX CALCULATION																
20		RETURN ON INVESTMENT	847,683	LN 3	0	0	566,878	0	280,805	0	0	0	0	0	0	0	0	0
21		INTEREST AND RELATED ITEMS	0	A-12,LN 16	0	0	0	0	0	0	0	0	0	0	0	0	0	0
22		OTHER INCOME ADJUSTMENTS	0	A-12,LN 20	0	0	0	0	0	0	0	0	0	0	0	0	0	0
23		TOTAL INCOME ADJUSTMENTS	0	LN21+LN22	0	0	0	0	0	0	0	0	0	0	0	0	0	0
24		RETURN LESS INCOME ADJ	847,683	LN20-LN23	0	0	566,878	0	280,805	0	0	0	0	0	0	0	0	0
25		FEDERAL ITC AMORTIZATION	0	A-12,LN 22	0	0	0	0	0	0	0	0	0	0	0	0	0	0
26		FIT BASE	847,683		0	0	566,878	0	280,805	0	0	0	0	0	0	0	0	0
27		FEDERAL TAXABLE INCOME	1,284,368		0	0	858,906	0	425,462	0	0	0	0	0	0	0	0	0
28	34.00%	FEDERAL INCOME TAX	436,685	LN 27*FTR	0	0	292,028	0	144,657	0	0	0	0	0	0	0	0	0
29		FEDERAL SURTAX ALLOCATION	0	/LN 26	0	0	0	0	0	0	0	0	0	0	0	0	0	0
30		NET FEDERAL TAX BEFORE ITC AMORT	436,685	LN28-LN29	0	0	292,028	0	144,657	0	0	0	0	0	0	0	0	0
31		STATE ITC AMORTIZATION	0	A-12, LN23	0	0	0	0	0	0	0	0	0	0	0	0	0	0
32		SIT BASE	1,284,368		0	0	858,906	0	425,462	0	0	0	0	0	0	0	0	0
33		STATE TAXABLE INCOME	1,459,509		0	0	976,030	0	483,479	0	0	0	0	0	0	0	0	0
34	12.00%	STATE INCOME TAX	145,367	LN 33*STR	0	0	97,213	0	48,155	0	0	0	0	0	0	0	0	0
35		STATE SURTAX ALLOCATION	0	/LN 32	0	0	0	0	0	0	0	0	0	0	0	0	0	0
36		NET STATE INCOME TAX BEFORE ITC AMORT	145,367	LN34-LN35	0	0	97,213	0	48,155	0	0	0	0	0	0	0	0	0
37		FEDERAL TAX AT MAXIMUM RATE	436,685		0	0	292,028	0	144,657	0	0	0	0	0	0	0	0	0
38		INCOME ADJUSTMENT FOR FIT	0		0	0	0	0	0	0	0	0	0	0	0	0	0	0

PUBLIC VERSION

AUREON_01291

2002 Copyright TIS, Inc. v1.9

SUMMARY OF TELEPHONE PLANT AND RESERVES

LN	A/C	DESCRIPTION	TOTAL COMPANY	SOURCE	COMMON LINE LIMITED PAY	COMMON LINE COMMON LINE	TRAFFIC SENSITIVE SWITCHING	TRAFFIC SENSITIVE INFO	TRAFFIC SENSITIVE COMMON TRANSPORT TERM	TRAFFIC SENSITIVE COMMON TRANSPORT FACILITY	TRAFFIC SENSITIVE DEDICATED TRANSPORT	SPECIAL ACCESS NEL TERMINATION ALLOCATED	SPECIAL ACCESS NEL TERMINATION TERM	SPECIAL ACCESS CHANNEL MILEAGE TERM	SPECIAL ACCESS CHANNEL MILEAGE FACILITY	B&C	IX CATEGORY MSG	IX CATEGORY P.L.
		NET INVESTMENT SUMMARY																
1		GENERAL SUPPORT FACILITIES	6,687,072	A-3,LN 6C	0	0	4,471,902	0	2,215,169	0	0	0	0	0	0		0	0
2		CENTRAL OFFICE SWITCHING	28,293,118	A-4,LN 21+25			18,920,697		9,372,421		0						0	
3		OPERATOR SYSTEMS	0	A-4,LN 17			0	0	0		0						0	
4		CENTRAL OFFICE TRANSMISSION	0	A-4,LN 41	0	0			0		0	0	0	0			0	0
5		INFORMATION ORIG/TERM	0	A-5,LN 10	0	0							0					
6		CABLE AND WIRE FACILITIES	0	A-5,LN 21	0	0				0	0	0	0		0		0	0
7		TANGIBLE ASSETS	1,190,039	A-3,LN 14	0	0	795,825	0	394,214	0	0	0	0	0	0		0	0
8		INTANGIBLE ASSETS	0	A-3,LN 15	0	0	0	0	0	0	0	0	0	0	0		0	0
9		TOTAL PLANT IN SERVICE	36,170,228		0	0	24,188,424	0	11,981,804	0	0	0	0	0	0		0	0
10		% DISTRIBUTION	100.0000%		0.0000%	0.0000%	66.8738%	0.0000%	33.1262%	0.0000%	0.0000%	0.0000%	0.0000%	0.0000%	0.0000%		0.0000%	0.0000%
11		PROPERTY HELD FOR FUTURE USE	0	A-6,LN 6	0	0	0	0	0	0	0	0	0	0	0		0	0
12		PLANT UNDER CONSTRUCT. - SHORT TERM	99,770	A-6,LN 13	0	0	66,720	0	33,050	0	0	0	0	0	0		0	0
13		PLANT UNDER CONSTRUCT. - LONG TERM	0	A-6,LN 20	0	0	0	0	0	0	0	0	0	0	0		0	0
14		TELEPHONE PLANT ADJUSTMENT	0	A-6,LN 27	0	0	0	0	0	0	0	0	0	0	0		0	0
15		TOTAL PROPERTY,PLANT & EQUIP.	36,269,998		0	0	24,255,144	0	12,014,854	0	0	0	0	0	0		0	0
16		% DISTRIBUTION	100.0000%		0.0000%	0.0000%	66.8738%	0.0000%	33.1262%	0.0000%	0.0000%	0.0000%	0.0000%	0.0000%	0.0000%		0.0000%	0.0000%
17		ACCUM DEPRECIATION - PLANT IN SERVICE	26,812,480	A-7,LN 7	0	0	17,930,537	0	8,881,943	0	0	0	0	0	0		0	0
18		ACCUM DEPRECIATION - FUTURE USE	0	A-7,LN 8	0	0	0	0	0	0	0	0	0	0	0		0	0
19		ACCUM AMORTIZATION - TANGIBLE PROPERTY	760,444	A-7,LN 15	0	0	508,538	0	251,906	0	0	0	0	0	0		0	0
20		ACCUM AMORTIZATION - INTANGIBLE PROP.	0	A-7,LN 16	0	0	0	0	0	0	0	0	0	0	0		0	0
21		ACCUM AMORTIZATION - TEL PLANT ADJ.	0	A-7,LN 17	0	0	0	0	0	0	0	0	0	0	0		0	0
22		OPERATING DEFERRED INCOME TAX	2,072,405	A-7,LN 26	0	0	1,385,897	0	686,508	0	0	0	0	0	0		0	0
23		OTHER DEFERRED CREDITS - NET	0	A-7,LN 34	0	0	0	0	0	0	0	0	0	0	0		0	0
24		NET TELEPHONE PLANT	6,624,670		0	0	4,430,172	0	2,194,498	0	0	0	0	0	0		0	0
25		% DISTRIBUTION	100.0000%		0.0000%	0.0000%	66.8738%	0.0000%	33.1262%	0.0000%	0.0000%	0.0000%	0.0000%	0.0000%	0.0000%		0.0000%	0.0000%
26		MATERIALS AND SUPPLIES	0	A-3,LN 16	0	0	0	0	0	0	0	0	0	0	0		0	0
27		RTB STOCK	0	A-3,LN 17	0	0	0	0	0	0	0	0	0	0	0		0	0
28		EQUAL ACCESS EQUIPMENT	0	A-3,LN 8			0											
29		OTHER JURISDICTIONAL ASSETS	0	A-3,LN 18	0	0	0	0	0	0	0	0	0	0	0		0	0
30		CASH WORKING CAPITAL	910,290	A-3,LN 10	0	0	608,746	0	301,544	0	0	0	0	0	0		0	0
31		NET TELEPHONE PLANT,M&S AND CASH WORKING CAPITAL	7,534,959		0	0	5,038,917	0	2,496,042	0	0	0	0	0	0		0	0
32		% DISTRIBUTION	100.0000%		0.0000%	0.0000%	66.8738%	0.0000%	33.1262%	0.0000%	0.0000%	0.0000%	0.0000%	0.0000%	0.0000%		0.0000%	0.0000%

PUBLIC VERSION

AUREON_01292

2002 Copyright TIS, Inc. v1.9

GENERAL SUPPORT FACILITIES AND MISCELLANEOUS PLANT ALLOCATION

A-3,1of1

					COMMON LINE		TRAFFIC SENSITIVE					SPECIAL ACCESS						
									COMMON TRANSPORT		DEDICATED	NEL TERMINATION		CHANNEL MILEAGE			IX CATEGORY	
LN	A/C	DESCRIPTION	TOTAL COMPANY	SOURCE	LIMITED PAY	COMMON LINE	SWITCHING	INFO	TERM	FACILITY	TRANSPORT	ALLOCATED	TERM	TERM	FACILITY	B&C	MSG	P.L.
		BASIS FOR GENERAL SUPPORT FACILITIES																
1		CENTRAL OFFICE EQUIPMENT	28,293,118	A-4,LN 42	0	0	18,920,697	0	9,372,421		0	0	0	0			0	0
2		INFORMATION ORIG/TERM	0	A-5,LN 10	0	0							0					
3		CWF EXCL CAT 1.3	0	A-5,LN 23	0	0				0	0	0	0		0		0	0
4		TOTAL	28,293,118		0	0	18,920,697	0	9,372,421	0	0	0	0	0	0		0	0
5		% DISTRIBUTION	100.0000%		0.0000%	0.0000%	66.8738%	0.0000%	33.1262%	0.0000%	0.0000%	0.0000%	0.0000%	0.0000%	0.0000%		0.0000%	0.0000%
		GENERAL SUPPORT ASSETS																
6a		ALLOCATED	6,687,072	LN 5	0	0	4,471,902	0	2,215,169	0	0	0	0	0	0		0	0
6b		DIRECT NON ACCESS	0	DIRECT													0	0
6c		TOTAL GENERAL SUPPORT ASSETS	6,687,072		0	0	4,471,902	0	2,215,169	0	0	0	0	0	0		0	0
7		% DISTRIBUTION	100.0000%		0.0000%	0.0000%	66.8738%	0.0000%	33.1262%	0.0000%	0.0000%	0.0000%	0.0000%	0.0000%	0.0000%		0.0000%	0.0000%
8		EQUAL ACCESS EQUIPMENT	0	DIRECT			0											
9		COE,IOT,CWF,GENERAL SUPPORT AND EQUAL ACCESS EQUIPMENT	34,980,189		0	0	23,392,599	0	11,587,590	0	0	0	0	0	0		0	0
10		% DISTRIBUTION	100.0000%		0.0000%	0.0000%	66.8738%	0.0000%	33.1262%	0.0000%	0.0000%	0.0000%	0.0000%	0.0000%	0.0000%		0.0000%	0.0000%
11		TANGIBLE ASSETS																
12		CAPITAL LEASES	0	LN 10	0	0	0	0	0	0	0	0	0	0	0		0	0
13		LEASEHOLD IMPROVEMENTS	1,190,039	LN 10	0	0	795,825	0	394,214	0	0	0	0	0	0		0	0
14		TOTAL	1,190,039		0	0	795,825	0	394,214	0	0	0	0	0	0		0	0
15		INTANGIBLE ASSETS	0	LN 10	0	0	0	0	0	0	0	0	0	0	0		0	0
16		MATERIALS AND SUPPLIES	0	LN 10	0	0	0	0	0	0	0	0	0	0	0		0	0
17		RTB STOCK	0	LN 10	0	0	0	0	0	0	0	0	0	0	0		0	0
18		OTHER JURISDICTIONAL ASSETS	0	LN 10	0	0	0	0	0	0	0	0	0	0	0		0	0
19		COE,IOT,CWF,GEN SUPP & EQUAL ACCESS FOR APPORTIONING PRESUBSCRIPTION	34,980,189		0	0	23,392,599	0	11,587,590	0	0							
20		% DISTRIBUTION	100.0000%		0.0000%	0.0000%	66.8738%	0.0000%	33.1262%	0.0000%	0.0000%							
21		COE,IOT & CWF EXCL CCL FOR ASSIGNING CARRIER ACCESS BILLING EXPENSES	28,293,118				18,920,697	0	9,372,421	0	0	0	0	0	0			
22		% DISTRIBUTION	100.0000%				66.8738%	0.0000%	33.1262%	0.0000%	0.0000%	0.0000%	0.0000%	0.0000%	0.0000%			

PUBLIC VERSION

AUREON_01293

2002 Copyright TIS, Inc. v1.9

CENTRAL OFFICE EQUIPMENT ALLOCATION

A-4,1of2

LN	A/C	DESCRIPTION	TOTAL COMPANY	SOURCE	COMMON LINE: LIMITED PAY	COMMON LINE: COMMON LINE	TRAFFIC SENSITIVE: SWITCHING	TRAFFIC SENSITIVE: INFO	TRAFFIC SENSITIVE: COMMON TRANSPORT TERM	TRAFFIC SENSITIVE: COMMON TRANSPORT FACILITY	TRAFFIC SENSITIVE: DEDICATED TRANSPORT	SPECIAL ACCESS: NEL TERMINATION ALLOCATED	SPECIAL ACCESS: NEL TERMINATION TERM	SPECIAL ACCESS: CHANNEL MILEAGE TERM	SPECIAL ACCESS: CHANNEL MILEAGE FACILITY	B&C	IX CATEGORY: MSG	IX CATEGORY: P.L.
		ALLOCATION FACTORS																
1		STANDARD WORK SECONDS																
2		- MANUAL BOARDS	100.0000%	AL-1,LN 9			0.0000%	0.0000%									100.0000%	
3		- TSPS COMPLEX	100.0000%	AL-1,LN 10			0.0000%	0.0000%									100.0000%	
4		EQUIVALENT ACCESS LINES - MSG COE	0.0000%	AL-1,LN 2	0.0000%	0.0000%						0.0000%						
5		IX CIRCUIT TERMINATIONS - MSG COE	100.0000%	AL-1,LN 6					100.0000%		0.0000%							
		CENTRAL OFFICE EQUIPMENT																
6	2220	OPERATOR SYSTEMS																
7		MANUAL SWITCHBOARDS	0	LN 2			0	0									0	
8		AUXILIARY SWITCHBOARDS																
9		- DIRECTORY ASSISTANCE	0	DIRECT				0										
10		- INTERCEPT	0	DIRECT			0											
11		- OTHER	0	DIRECT													0	
12		SERVICE OBSERVING BOARDS	0	LN 27			0	0	0		0						0	
13		TSPS																
14		- OPERATOR	0	LN 3			0	0									0	
15		- RTA	0	LN 27			0	0	0		0						0	
16		- OTHER	0	LN 27			0	0	0		0						0	
17		TOTAL OPERATOR SYSTEMS	0				0	0	0		0						0	
18	2210	TANDEM SWITCHING EQUIPMENT																
19		ACCESS	9,372,421	DIRECT					9,372,421									
20		NON ACCESS	0	DIRECT													0	
21		TOTAL TANDEM SWITCH	9,372,421						9,372,421								0	
22	2210	LOCAL SWITCHING EQUIPMENT																
23		ACCESS	18,920,697	DIRECT			18,920,697											
24		DEDICATED	0	DIRECT							0							
25		TOTAL LOCAL SWITCH	18,920,697				18,920,697				0							
26		TOTAL CAT1 EXCL SVC OBS, CAT 2 AND 3	28,293,118				18,920,697	0	9,372,421		0						0	
27		% DISTRIBUTION	100.0000%	LN 26			66.8738%	0.0000%	33.1262%		0.0000%						0.0000%	

2002 Copyright TIS, Inc. v1.9

PUBLIC VERSION

AUREON_01294

CENTRAL OFFICE EQUIPMENT ALLOCATION

LN	A/C	DESCRIPTION	TOTAL COMPANY	SOURCE	COMMON LINE: LIMITED PAY	COMMON LINE: COMMON LINE	TRAFFIC SENSITIVE: SWITCHING	TRAFFIC SENSITIVE: INFO	TRAFFIC SENSITIVE: COMMON TRANSPORT TERM	TRAFFIC SENSITIVE: COMMON TRANSPORT FACILITY	TRAFFIC SENSITIVE: DEDICATED TRANSPORT	SPECIAL ACCESS: NEL TERMINATION ALLOCATED	SPECIAL ACCESS: NEL TERMINATION TERM	SPECIAL ACCESS: CHANNEL MILEAGE TERM	SPECIAL ACCESS: CHANNEL MILEAGE FACILITY	B&C	IX CATEGORY: MSG	IX CATEGORY: P.L.
28	2230	CENTRAL OFFICE TRANSMISSION																
29		EXCHANGE WIDEBAND	0	DIRECT					0					0				
30		EXCHANGE TRUNK - BASIC	0	DIRECT					0					0				
31		EXCHANGE TRUNK - SPECIAL	0	DIRECT							0			0				
32		SUBSCRIBER LINE	0	LN 4/DIRECT	0	0						0	0					
33		INTEREXCHANGE CIRCUIT																
34		FURNINSHED OTHERS	0	DIRECT							0			0				
35		ACCESS - BASIC	0	LN 5/DIRECT					0		0			0				
36		ACCESS - SPECIAL	0	DIRECT							0			0				
37		NON ACCESS	0	DIRECT													0	0
38		TOTAL IX CIRCUIT	0						0		0			0			0	0
39		HOST/REMOTE CIRCUIT	0	DIRECT					0					0				
40		EQUIPMENT RENTED OTHERS	0	DIRECT													0	0
41		TOTAL CENTRAL OFFICE TRANSMISSION	0		0	0			0		0	0	0	0			0	0
42		TOTAL CENTRAL OFFICE EQUIPMENT	28,293,118		0	0	18,920,697	0	9,372,421		0	0	0	0			0	0
43		% DISTRIBUTION	100.0000%		0.0000%	0.0000%	66.8738%	0.0000%	33.1262%		0.0000%	0.0000%	0.0000%	0.0000%			0.0000%	0.0000%
		COE RATIOS																
44		OPERATOR SYSTEMS	0.0000%	LN 17			0.0000%	0.0000%	0.0000%		0.0000%						0.0000%	
45		TANDEM SWITCHING	100.0000%	LN 21					100.0000%								0.0000%	
46		LOCAL SWITCHING	100.0000%	LN 25			100.0000%				0.0000%							
47		CENTRAL OFFICE SWITCHING	100.0000%	LN 21+25			66.8738%		33.1262%		0.0000%						0.0000%	
48		CENTRAL OFFICE TRANSMISSION	100.0000%	LN 37	0.0000%	0.0000%			100.0000%		0.0000%	0.0000%	0.0000%	0.0000%			0.0000%	0.0000%

PUBLIC VERSION

AUREON_01295

2002 Copyright TIS, Inc. v1.9

INFORMATION ORIGINATION/TERMINATION AND CABLE AND WIRE FACILITIES

A-5,1of1

LN	A/C	DESCRIPTION	TOTAL COMPANY	SOURCE	COMMON LINE: LIMITED PAY	COMMON LINE: COMMON LINE	TRAFFIC SENSITIVE: SWITCHING	TRAFFIC SENSITIVE: INFO	TRAFFIC SENSITIVE: COMMON TRANSPORT TERM	TRAFFIC SENSITIVE: COMMON TRANSPORT FACILITY	TRAFFIC SENSITIVE: DEDICATED TRANSPORT	SPECIAL ACCESS: NEL TERMINATION ALLOCATED	SPECIAL ACCESS: NEL TERMINATION TERM	SPECIAL ACCESS: CHANNEL MILEAGE TERM	SPECIAL ACCESS: CHANNEL MILEAGE FACILITY	B&C	IX CATEGORY: MSG	IX CATEGORY: P.L.
		ALLOCATION FACTORS																
1		EQUIVALENT ACCESS LINES - MSG CWF	0.0000%	AL-1,LN 4	0.0000%	0.0000%						0.0000%						
2		IX CIRCUIT MILES - MSG CWF	100.0000%	AL-1,LN 8						100.0000%	0.0000%							
3	2310	INFORMATION ORIG/TERM																
4		OTHER IOT EQUIPMENT																
5		COIN PUBLIC TELEPHONE	0	DIRECT		0												
6		COINLESS PUBLIC TELEPHONE	0	DIRECT	0													
7		OTHER	0	DIRECT		0							0					
8		SUBTOTAL	0		0	0							0					
9		NEW CUSTOMER PREMISE EQUIP	0	DIRECT		0							0					
10		TOTAL ORIG/TERM EQUIP	0		0	0							0					
11		% DISTRIBUTION	0.0000%		0.0000%	0.0000%							0.0000%					
12	2410	CABLE AND WIRE FACILITIES																
13		SUBSCRIBER LINE	0	LN 1/DIRECT	0	0						0	0					
14		EXCHANGE WIDEBAND	0	DIRECT						0					0			
15a		EXCHANGE TRUNK - BASIC	0	DIRECT						0					0			
15b		EXCHANGE TRUNK - SPECIAL	0	DIRECT							0				0			
16		INTEREXCHANGE WIDEBAND	0	DIRECT						0					0			
17a		IX TRUNK - ACCESS	0	LN 2/DIRECT						0	0				0			
17b		IX TRUNK - SPECIAL	0	DIRECT							0				0			
18		IX TRUNK - NON ACCESS	0	DIRECT													0	0
19		HOST/REMOTE	0	DIRECT						0					0			
20		EQUIPMENT FURNISHED OTHERS	0	DIRECT													0	0
21		TOTAL CABLE AND WIRE FACILITIES	0		0	0				0	0	0	0		0		0	0
22		% DISTRIBUTION	100.0000%		0.0000%	0.0000%				100.0000%	0.0000%	0.0000%	0.0000%		0.0000%		0.0000%	0.0000%
23		TOTAL CWF EXCLUDING CAT 1.3	0		0	0				0	0	0	0		0		0	0
24		% DISTRIBUTION	100.0000%		0.0000%	0.0000%				100.0000%	0.0000%	0.0000%	0.0000%		0.0000%		0.0000%	0.0000%

2002 Copyright TIS, Inc. v1.9

PUBLIC VERSION

AUREON_01296

OTHER TELECOMMUNICATIONS PLANT ALLOCATION

A-6,1of1

					COMMON LINE		TRAFFIC SENSITIVE					SPECIAL ACCESS						
									COMMON TRANSPORT		DEDICATED	NEL TERMINATION		CHANNEL MILEAGE			IX CATEGORY	
LN	A/C	DESCRIPTION	TOTAL COMPANY	SOURCE	LIMITED PAY	COMMON LINE	SWITCHING	INFO	TERM	FACILITY	TRANSPORT	ALLOCATED	TERM	TERM	FACILITY	B&C	MSG	P.L.
		OTHER TELECOMMUNICATIONS PLANT																
1	2002	PROPERTY HELD FOR FUTURE USE																
2		GENERAL SUPPORT	0	A-3,LN 7	0	0	0	0	0	0	0	0	0	0	0		0	0
3		CENTRAL OFFICE EQUIPMENT	0	A-4,LN 43	0	0	0	0	0	0	0	0	0	0	0		0	0
4		CABLE AND WIRE FACILITIES	0	A-5,LN 22	0	0				0	0	0	0	0	0		0	0
5		UNDISTRIBUTED	0	A-3,LN 10	0	0	0	0	0	0	0	0	0	0	0		0	0
6		TOTAL	0		0	0	0	0	0	0	0	0	0	0	0		0	0
7		% DISTRIBUTION	0.0000%		0.0000%	0.0000%	0.0000%	0.0000%	0.0000%	0.0000%	0.0000%	0.0000%	0.0000%	0.0000%	0.0000%		0.0000%	0.0000%
8	2003	PLANT UNDER CONSTR. - SHORT TERM																
9		GENERAL SUPPORT	0	A-3,LN 7	0	0	0	0	0	0	0	0	0	0	0		0	0
10		CENTRAL OFFICE EQUIPMENT	0	A-4,LN 43	0	0	0	0	0	0	0	0	0	0	0		0	0
11		CABLE AND WIRE FACILITIES	0	A-5,LN 22	0	0				0	0	0	0	0	0		0	0
12		UNDISTRIBUTED	99,770	A-3,LN 10	0	0	66,720	0	33,050	0	0	0	0	0	0		0	0
13		TOTAL	99,770		0	0	66,720	0	33,050	0	0	0	0	0	0		0	0
14		% DISTRIBUTION	100.0000%		0.0000%	0.0000%	66.8738%	0.0000%	33.1262%	0.0000%	0.0000%	0.0000%	0.0000%	0.0000%	0.0000%		0.0000%	0.0000%
15	2004	PLANT UNDER CONSTR. - LONG TERM																
16		GENERAL SUPPORT	0	A-3,LN 7	0	0	0	0	0	0	0	0	0	0	0		0	0
17		CENTRAL OFFICE EQUIPMENT	0	A-4,LN 43	0	0	0	0	0	0	0	0	0	0	0		0	0
18		CABLE AND WIRE FACILITIES	0	A-5,LN 22	0	0				0	0	0	0	0	0		0	0
19		UNDISTRIBUTED	0	A-3,LN 10	0	0	0	0	0	0	0	0	0	0	0		0	0
20		TOTAL	0		0	0	0	0	0	0	0	0	0	0	0		0	0
21		% DISTRIBUTION	0.0000%		0.0000%	0.0000%	0.0000%	0.0000%	0.0000%	0.0000%	0.0000%	0.0000%	0.0000%	0.0000%	0.0000%		0.0000%	0.0000%
22	2005	TELECOMMUNICATIONS PLANT ADJUST.																
23		GENERAL SUPPORT	0	A-3,LN 7	0	0	0	0	0	0	0	0	0	0	0		0	0
24		CENTRAL OFFICE EQUIPMENT	0	A-4,LN 43	0	0	0	0	0	0	0	0	0	0	0		0	0
25		CABLE AND WIRE FACILITIES	0	A-5,LN 22	0	0				0	0	0	0	0	0		0	0
26		UNDISTRIBUTED	0	A-3,LN 10	0	0	0	0	0	0	0	0	0	0	0		0	0
27		TOTAL	0		0	0	0	0	0	0	0	0	0	0	0		0	0
28		% DISTRIBUTION	0.0000%		0.0000%	0.0000%	0.0000%	0.0000%	0.0000%	0.0000%	0.0000%	0.0000%	0.0000%	0.0000%	0.0000%		0.0000%	0.0000%

PUBLIC VERSION

AUREON_01297

2002 Copyright TIS, Inc. v1.9

ACCUMULATED DEPRECIATION, AMORTIZATION AND DEFERRED INCOME TAXES

LN	A/C	DESCRIPTION	TOTAL COMPANY	SOURCE	COMMON LINE: LIMITED PAY	COMMON LINE: COMMON LINE	TRAFFIC SENSITIVE: SWITCHING	TRAFFIC SENSITIVE: INFO	TRAFFIC SENSITIVE: COMMON TRANSPORT TERM	TRAFFIC SENSITIVE: COMMON TRANSPORT FACILITY	TRAFFIC SENSITIVE: DEDICATED TRANSPORT	SPECIAL ACCESS: NEL TERMINATION ALLOCATED	SPECIAL ACCESS: NEL TERMINATION TERM	SPECIAL ACCESS: CHANNEL MILEAGE TERM	SPECIAL ACCESS: CHANNEL MILEAGE FACILITY	B&C	IX CATEGORY: MSG	IX CATEGORY: P.L.
1	3100	ACCUM DEPRECIATION - PLANT IN SERVICE																
2		GENERAL SUPPORT	5,006,510	A-3,LN 10	0	0	3,348,046	0	1,658,464	0	0	0	0	0	0		0	0
3		CENTRAL OFFICE SWITCHING EQUIPMENT	21,805,970	A-3,LN 10	0	0	14,582,492	0	7,223,479	0	0	0	0	0	0		0	0
4		OPERATOR SYSTEMS EQUIPMENT	0	A-3,LN 10	0	0	0	0	0	0	0	0	0	0	0		0	0
5		CENTRAL OFFICE TRANSMISSION	0	A-3,LN 10	0	0	0	0	0	0	0	0	0	0	0		0	0
6		UNDISTRIBUTED COE	0	A-3,LN 10	0	0	0	0	0	0	0	0	0	0	0		0	0
7		INFORMATION ORIG/TERM	0	A-3,LN 10	0	0	0	0	0	0	0	0	0	0	0		0	0
8		CABLE AND WIRE FACILITIES	0	A-3,LN 10	0	0	0	0	0	0	0	0	0	0	0		0	0
9		TOTAL ACCUM DEPR - TPIS	26,812,480		0	0	17,930,537	0	8,881,943	0	0	0	0	0	0		0	0
10	3200	ACCUM DEPRECIATION - FUTURE USE	0	A-3,LN 10	0	0	0	0	0	0	0	0	0	0	0		0	0
11		TOTAL ACCUM DEPRECIATION	26,812,480		0	0	17,930,537	0	8,881,943	0	0	0	0	0	0		0	0
12		% DISTRIBUTION	100.0000%		0.0000%	0.0000%	66.8738%	0.0000%	33.1262%	0.0000%	0.0000%	0.0000%	0.0000%	0.0000%	0.0000%		0.0000%	0.0000%
		ACCUMULATED AMORTIZATION																
13	3400	TANGIBLE ASSETS																
14		CAPITAL LEASES	0	A-3,LN 10	0	0	0	0	0	0	0	0	0	0	0		0	0
15		LEASEHOLD IMPROVEMENTS	760,444	A-3,LN 10	0	0	508,538	0	251,906	0	0	0	0	0	0		0	0
16		UNDISTRIBUTED	0	A-3,LN 10	0	0	0	0	0	0	0	0	0	0	0		0	0
17		TOTAL ACCUM AMORT - TANGIBLE	760,444		0	0	508,538	0	251,906	0	0	0	0	0	0		0	0
18	3500	INTANGIBLE ASSETS	0	A-3,LN 10	0	0	0	0	0	0	0	0	0	0	0		0	0
19	3600	TELEPHONE PLANT ADJUSTMENT	0	A-3,LN 10	0	0	0	0	0	0	0	0	0	0	0		0	0
20		TOTAL ACCUM AMORTIZATION	760,444		0	0	508,538	0	251,906	0	0	0	0	0	0		0	0
21		% DISTRIBUTION	100.0000%		0.0000%	0.0000%	66.8738%	0.0000%	33.1262%	0.0000%	0.0000%	0.0000%	0.0000%	0.0000%	0.0000%		0.0000%	0.0000%
22	4100&	NET OPERATING DEFERRED INC TAX																
23	4340	GENERAL SUPPORT	0	A-3,LN 10	0	0	0	0	0	0	0	0	0	0	0		0	0
24		CENTRAL OFFICE EQUIP	0	A-3,LN 10	0	0	0	0	0	0	0	0	0	0	0		0	0
25		INFORMATION ORIG/TERM	0	A-3,LN 10	0	0	0	0	0	0	0	0	0	0	0		0	0
26		CABLE AND WIRE FACILITIES	0	A-3,LN 10	0	0	0	0	0	0	0	0	0	0	0		0	0
27		UNDISTRIBUTED	2,072,405	A-3,LN 10	0	0	1,385,897	0	686,508	0	0	0	0	0	0		0	0
28		TOTAL NET DEFERRED INC TAX	2,072,405		0	0	1,385,897	0	686,508	0	0	0	0	0	0		0	0
29		% DISTRIBUTION	100.0000%		0.0000%	0.0000%	66.8738%	0.0000%	33.1262%	0.0000%	0.0000%	0.0000%	0.0000%	0.0000%	0.0000%		0.0000%	0.0000%
30	4360	OTHER DEFERRED CREDITS - NET																
31		GENERAL SUPPORT	0	A-3,LN 10	0	0	0	0	0	0	0	0	0	0	0		0	0
32		CENTRAL OFFICE EQUIP	0	A-3,LN 10	0	0	0	0	0	0	0	0	0	0	0		0	0
33		INFORMATION ORIG/TERM	0	A-3,LN 10	0	0	0	0	0	0	0	0	0	0	0		0	0
34		CABLE AND WIRE FACILITIES	0	A-3,LN 10	0	0	0	0	0	0	0	0	0	0	0		0	0
35		UNDISTRIBUTED	0	A-3,LN 10	0	0	0	0	0	0	0	0	0	0	0		0	0
36		TOTAL OTHER DEFERRED CREDITS	0		0	0	0	0	0	0	0	0	0	0	0		0	0
37		% DISTRIBUTION	0.0000%		0.0000%	0.0000%	0.0000%	0.0000%	0.0000%	0.0000%	0.0000%	0.0000%	0.0000%	0.0000%	0.0000%		0.0000%	0.0000%

PUBLIC VERSION

AUREON_01298

2002 Copyright TIS, Inc. v1.9

SUMMARY OF OPERATING EXPENSE AND TAX AND MISCELLANEOUS TAX ITEMS

A-8,1of1

					COMMON LINE		TRAFFIC SENSITIVE					SPECIAL ACCESS					IX CATEGORY	
					LIMITED	COMMON			COMMON TRANSPORT		DEDICATED	NEL TERMINATION		CHANNEL MILEAGE				
LN	A/C	DESCRIPTION	TOTAL COMPANY	SOURCE	PAY	LINE	SWITCHING	INFO	TERM	FACILITY	TRANSPORT	ALLOCATED	TERM	TERM	FACILITY	B&C	MSG	P.L.
		OPERATING EXPENSE AND TAX																
1	6110	NETWORK SUPPORT EXPENSE	0	A-9,LN 6	0	0	0	0	0	0	0	0	0	0	0	0	0	0
2	6120	GENERAL SUPPORT EXPENSE	903,520	A-9,LN 7	0	0	604,218	0	299,301	0	0	0	0	0	0		0	0
3	6210	CENTRAL OFFICE EXPENSE	1,234,959	A-9,LN 15	0	0	825,865	0	409,094	0	0	0	0	0	0	0	0	0
4	6310	INFORMATION ORIG/TERM EXP	0	A-9,LN 22	0	0	0	0	0	0	0	0	0	0	0	0	0	0
5	6410	CABLE AND WIRE FACILITIES EXP	14,478,572	A-9,LN 24	0	0	0	0	0	14,478,572	0	0	0	0	0		0	0
6	6510	OTHER PLANT EXPENSE	0	A-10,LN 6	0	0	0	0	0	0	0	0	0	0	0		0	0
7	6530	NETWORK OPERATIONS EXPENSE	1,027,226	A-10,LN 7	0	0	686,945	0	340,280	0	0	0	0	0	0		0	0
8	6540	ACCESS CHARGE EXPENSE	0	A-10,LN 8													0	0
9	6610	MARKETING EXPENSE	0	A-11,LN 1	0	0	0	0	0	0	0	0	0	0	0		0	0
8	6620	SERVICES EXPENSE	155,507	A-11,LN29	0	0	103,993	0	51,513	0	0	0	0	0	0	0	0	0
11	6710	EXECUTIVE AND PLANNING EXP	458,166	A-12,LN 8	0	0	57,169	0	28,319	372,678	0	0	0	0	0	0	0	0
12	6720	GENERAL AND ADMINISTRATIVE EXP	2,266,482	A-12,LN 9	0	0	282,807	0	140,089	1,843,585	0	0	0	0	0	0	0	0
13		SUBTOTAL OPERATING EXPENSE	20,524,431		0	0	2,560,998	0	1,268,598	16,694,836	0	0	0	0	0	0	0	0
14		% DISTRIBUTION	100.0000%		0.0000%	0.0000%	12.4778%	0.0000%	6.1809%	81.3413%	0.0000%	0.0000%	0.0000%	0.0000%	0.0000%	0.0000%	0.0000%	0.0000%
15	6560	DEPRECIATION AND AMORTIZATION	3,504,047	A-10,LN 19+27	0	0	2,343,291	0	1,160,756	0	0	0	0	0	0	0	0	0
16	7200	OTHER OPERATING TAX	200,946	A-12,LN 24	0	0	134,381	0	66,566	0	0	0	0	0	0		0	0
17		EQUAL ACCESS EXPENSE	0	A-12,LN 12			0											
18		TOTAL OPERATING EXP & TAX	24,229,425		0	0	5,038,670	0	2,495,919	16,694,836	0	0	0	0	0	0	0	0
19		% DISTRIBUTION	100.0000%		0.0000%	0.0000%	20.7957%	0.0000%	10.3012%	68.9031%	0.0000%	0.0000%	0.0000%	0.0000%	0.0000%	0.0000%	0.0000%	0.0000%
20	7370	NON OPERATING EXPENSE																
21		ABANDONED CONSTRUCTION	0	A-3,LN 10	0	0	0	0	0	0	0	0	0	0	0	0	0	0
22		CONTRIBUTIONS	118,746	A-3,LN 10	0	0	79,410	0	39,336	0	0	0	0	0	0	0	0	0
23		TOTAL NON OPERATING EXP	118,746		0	0	79,410	0	39,336	0	0	0	0	0	0	0	0	0
24		UNCOLLECTIBLES																
25	5310	END USER MSG TOLL	0	A-3,LN 10	0	0	0	0	0	0	0	0	0	0	0	0	0	0
26	5320	END USER COMMON LINE	0	DIRECT		0												
27	5330	IX CARRIER	2,893,575	A-3,LN 22			1,935,045	0	958,530	0	0	0	0	0	0	0	0	0
28		TOTAL UNCOLLECTIBLES	2,893,575		0	0	1,935,045	0	958,530	0	0	0	0	0	0	0	0	0
29	7340	ALLOWANCE FOR FUNDS USED DURING CONSTRUCTION	0	A-3,LN 10	0	0	0	0	0	0	0	0	0	0	0	0	0	0

PUBLIC VERSION

AUREON_01299

2002 Copyright TIS, Inc. v1.9

PLANT SPECIFIC EXPENSE ALLOCATION

A-9,1of1

LN	A/C	DESCRIPTION	TOTAL COMPANY	SOURCE	COMMON LINE: LIMITED PAY	COMMON LINE: COMMON LINE	TRAFFIC SENSITIVE: SWITCHING	TRAFFIC SENSITIVE: INFO	TRAFFIC SENSITIVE: COMMON TRANSPORT TERM	TRAFFIC SENSITIVE: COMMON TRANSPORT FACILITY	TRAFFIC SENSITIVE: DEDICATED TRANSPORT	SPECIAL ACCESS: NEL TERMINATION ALLOCATED	SPECIAL ACCESS: NEL TERMINATION TERM	SPECIAL ACCESS: CHANNEL MILEAGE TERM	SPECIAL ACCESS: CHANNEL MILEAGE FACILITY	B&C	IX CATEGORY: MSG	IX CATEGORY: P.L.
		BASIS FOR NETWORK SUPPORT EXPENSE																
1		GEN SUPPORT, COE, IOT AND C&WF	34,980,189	VARIOUS	0	0	23,392,599	0	11,587,590	0	0	0	0	0	0		0	0
2		EQUAL ACCESS EQUIPMENT	0	A-3,LN 8			0											
3		TOTAL	34,980,189		0	0	23,392,599	0	11,587,590	0	0	0	0	0	0		0	0
4		% DISTRIBUTION	100.0000%		0.0000%	0.0000%	66.8738%	0.0000%	33.1262%	0.0000%	0.0000%	0.0000%	0.0000%	0.0000%	0.0000%		0.0000%	0.0000%
		PLANT SPECIFIC EXPENSES																
5		GENERAL SUPPORT EXPENSE																
6	6110	NETWORK SUPPORT	0	LN 4	0	0	0	0	0	0	0	0	0	0	0		0	0
7	6120	GENERAL SUPPORT	903,520	A-3,LN 7	0	0	604,218	0	299,301	0	0	0	0	0	0		0	0
8		TOTAL GENERAL SUPPORT EXP	903,520		0	0	604,218	0	299,301	0	0	0	0	0	0		0	0
9		% DISTRIBUTION	100.0000%		0.0000%	0.0000%	66.8738%	0.0000%	33.1262%	0.0000%	0.0000%	0.0000%	0.0000%	0.0000%	0.0000%		0.0000%	0.0000%
10		CENTRAL OFFICE EXPENSE																
11	6210	CENTRAL OFFICE SWITCHING EXPENSE	1,234,959	A-4,LN 43	0	0	825,865	0	409,094		0	0	0	0			0	0
12	6220	OPERATOR SYSTEMS EXPENSE	0	A-4,LN 43	0	0	0	0	0		0	0	0	0			0	0
13	6230	CENTRAL OFFICE TRANSMISSION EXPENSE	0	A-4,LN 43	0	0	0	0	0		0	0	0	0			0	0
14		UNDISTRIBUTED	0	A-4,LN 43	0	0	0	0	0		0	0	0	0			0	0
15		TOTAL CENTRAL OFFICE EXPENSE	1,234,959		0	0	825,865	0	409,094		0	0	0	0			0	0
16		% DISTRIBUTION	100.0000%		0.0000%	0.0000%	66.8738%	0.0000%	33.1262%		0.0000%	0.0000%	0.0000%	0.0000%			0.0000%	0.0000%
17	6310	INFORMATION ORIG/TERM EXPENSE																
18		COIN PAY TELEPHONE	0	DIRECT		0												
19		COINLESS PAY TELEPHONE	0	DIRECT	0													
20		OTHER	0	DIRECT		0							0					
21		CPE	0	DIRECT		0												
22		TOTAL INFORMATION ORIG/TERM EXP	0		0	0							0					
23		% DISTRIBUTION	0.0000%		0.0000%	0.0000%							0.0000%					
24	6410	CABLE AND WIRE FACILITIES EXPENSE	14,478,572	A-5,LN 22	0	0				14,478,572	0	0	0	0	0		0	0
25		TOTAL PLANT SPECIFIC EXPENSE	16,617,051		0	0	1,430,083	0	708,395	14,478,572	0	0	0	0	0		0	0
26		% DISTRIBUTION	100.0000%		0.0000%	0.0000%	8.6061%	0.0000%	4.2631%	87.1308%	0.0000%	0.0000%	0.0000%	0.0000%	0.0000%		0.0000%	0.0000%

PUBLIC VERSION

AUREON_01300

2002 Copyright TIS, Inc. v1.9

PLANT NON SPECIFIC EXPENSE ALLOCATION

					COMMON LINE		TRAFFIC SENSITIVE					SPECIAL ACCESS						
									COMMON TRANSPORT			NEL TERMINATION		CHANNEL MILEAGE			IX CATEGORY	
LN	A/C	DESCRIPTION	TOTAL COMPANY	SOURCE	LIMITED PAY	COMMON LINE	SWITCHING	INFO	TERM	FACILITY	DEDICATED TRANSPORT	ALLOCATED	TERM	TERM	FACILITY	B&C	MSG	P.L.
1		CENTRAL OFFICE EQUIPMENT	28,293,118	A-4,LN 38	0	0	18,920,697	0	9,372,421		0	0	0	0			0	0
2		INFORMATION ORIG/TERM	0	A-5,LN 10	0	0							0					
3		CABLE AND WIRE FACILITIES	0	A-5,LN 21	0	0				0	0	0	0		0		0	0
4		TOTAL	28,293,118		0	0	18,920,697	0	9,372,421	0	0	0	0	0	0		0	0
5		% DISTRIBUTION	100.0000%		0.0000%	0.0000%	66.8738%	0.0000%	33.1262%	0.0000%	0.0000%	0.0000%	0.0000%	0.0000%	0.0000%		0.0000%	0.0000%
		PLANT NONSPECIFIC EXPENSE																
6	6510	OTHER PROP PLANT & EQUIP EXPENSE	0	LN 5	0	0	0	0	0	0	0	0	0	0	0		0	0
7	6530	NETWORK OPERATIONS EXPENSE	1,027,226	LN 5	0	0	686,945	0	340,280	0	0	0	0	0	0		0	0
8	6540	ACCESS CHARGE EXPENSE	0	DIRECT													0	0
9	6560	DEPRECIATION EXPENSE																
10		GENERAL SUPPORT	759,660	A-3,LN 7	0	0	508,014	0	251,646	0	0	0	0	0	0		0	0
11		CENTRAL OFFICE SWITCHING EQUIPMENT	2,744,387	A-4,LN 47			1,835,277		909,110		0						0	
12		OPERATOR SYSTEMS EQUIPMENT	0	A-4,LN 44			0	0	0		0						0	
13		CENTRAL OFFICE TRANSMISSION	0	A-4,LN 48	0	0			0		0	0	0	0			0	0
14		UNDISTRIBUTED COE	0	A-4,LN 43	0	0	0	0	0		0	0	0	0			0	0
15		INFORMATION ORIG/TERM	0	A-5,LN 11	0	0							0					
16		CABLE AND WIRE FACILITIES	0	A-5,LN 22	0	0				0	0	0	0		0		0	0
17		TOTAL DEP EXP - PLANT IN SERVICE	3,504,047		0	0	2,343,291	0	1,160,756	0	0	0	0	0	0		0	0
18		PROPERTY HELD FOR FUTURE USE	0	A-6,LN 7	0	0	0	0	0	0	0	0	0	0	0		0	0
19		TOTAL DEPRECIATION EXPENSE	3,504,047		0	0	2,343,291	0	1,160,756	0	0	0	0	0	0		0	0
20		% DISTRIBUTION	100.0000%		0.0000%	0.0000%	66.8738%	0.0000%	33.1262%	0.0000%	0.0000%	0.0000%	0.0000%	0.0000%	0.0000%		0.0000%	0.0000%
		AMORTIZATION EXPENSE																
21	6563	CAPITAL LEASE	0	A-3,LN 10	0	0	0	0	0	0	0	0	0	0	0		0	0
22	6563	LEASEHOLD IMPROVEMNTS	0	A-3,LN 10	0	0	0	0	0	0	0	0	0	0	0		0	0
23	6563	UNDISTRIBUTED	0	A-3,LN 10	0	0	0	0	0	0	0	0	0	0	0		0	0
24		SUBTOTAL	0		0	0	0	0	0	0	0	0	0	0	0		0	0
25	6564	INTANGIBLE ASSETS	0	A-3,LN 10	0	0	0	0	0	0	0	0	0	0	0		0	0
26	6565	OTHER - TEL PLANT ADJUSTMENT	0	A-6,LN 28	0	0	0	0	0	0	0	0	0	0	0		0	0
27		TOTAL AMORTIZATION EXPENSE	0		0	0	0	0	0	0	0	0	0	0	0		0	0
28		% DISTRIBUTION	0.0000%		0.0000%	0.0000%	0.0000%	0.0000%	0.0000%	0.0000%	0.0000%	0.0000%	0.0000%	0.0000%	0.0000%		0.0000%	0.0000%
29		TOTAL PLANT NON SPECIFIC EXPENSE	4,531,273		0	0	3,030,236	0	1,501,036	0	0	0	0	0	0		0	0
30		% DISTRIBUTION	100.0000%		0.0000%	0.0000%	66.8738%	0.0000%	33.1262%	0.0000%	0.0000%	0.0000%	0.0000%	0.0000%	0.0000%		0.0000%	0.0000%

PUBLIC VERSION

AUREON_01301

2002 Copyright TIS, Inc. v1.9

CUSTOMER OPERATIONS EXPENSE ALLOCATION

					COMMON LINE		TRAFFIC SENSITIVE					SPECIAL ACCESS						
									COMMON TRANSPORT		DEDICATED	NEL TERMINATION		CHANNEL MILEAGE			IX CATEGORY	
LN	A/C	DESCRIPTION	TOTAL COMPANY	SOURCE	LIMITED PAY	COMMON LINE	SWITCHING	INFO	TERM	FACILITY	TRANSPORT	ALLOCATED	TERM	TERM	FACILITY	B&C	MSG	P.L.
		CUSTOMER OPERATIONS EXPENSES																
1	6610	MARKETING	0	A-3,LN 10	0	0	0	0	0	0	0	0	0	0	0		0	0
2		TELEPHONE OPERATOR SERVICES																
3	6621	- CALL COMPLETION INCL DA	0	NS-OPERATORS			0	0									0	
4		- OPERATOR SERVICES UNDER CONTRACT	0	DIRECT			0	0									0	
5	6622	PUBLISHED DIRECTORY LISTINGS	0	DIRECT				0										
6	6623	ALL OTHER																
7	1.0	LOCAL BUSINESS OFFICE																
8		- END USER SVC ORDER PROCESSING																
9		- PRESUBSCRIPTION	0	A-3,LN 20	0	0	0	0	0	0	0							
10		- OTHER	0	AL-1,LN 12									0			0	0	
11		- END USER PAYMENT & COLLECTION	0	AL-1,LN 13		0							0			0	0	
12		- END USER BILLING INQUIRY	0	AL-1,LN 14		0							0			0	0	
13		- IX CARRIER SVC ORDER PROCESSING	0	AL-1,LN 15	0	0	0	0	0	0	0		0			0	0	
14		- IX CARRIER PAYMENT & COLLECTION	155,507	AL-1,LN 16	0	0	103,993	0	51,513	0	0		0			0	0	
15		- IX CARRIER BILLING INQUIRY	0	AL-1,LN 17	0	0	0	0	0	0	0		0			0	0	
16		- COIN COLLECT AND ADMINISTRATION	0	AL-1,LN 18	0	0												
17		SUBTOTAL LOCAL BUSINESS OFFICE	155,507		0	0	103,993	0	51,513	0	0	0	0			0	0	
18	2.0	CUSTOMER SERVICES (REV ACCTG)																
19		- MESSAGE PROCESSING																
20		- TOLL TICKET PROCESSING	0	DIRECT												0		
21		- LOCAL MESSAGE PROCESSING	0	DIRECT												0		
22		- OTHER BILLING & COLLECTION	0	DIRECT												0		
23		- END USER COMMON LINE	0	DIRECT		0												
24		- CARRIER ACCESS BILLING (CABS)	0	A-3,LN 22			0	0	0	0	0	0	0	0	0	0	0	0
25		SUBTOTAL CUSTOMER SERVICES	0		0	0	0	0	0	0	0	0	0	0	0	0	0	0
26		TOTAL CAT 1 AND CAT 2	155,507		0	0	103,993	0	51,513	0	0	0	0	0	0	0	0	0
27		% DISTRIBUTION	100.0000%		0.0000%	0.0000%	66.8738%	0.0000%	33.1262%	0.0000%	0.0000%	0.0000%	0.0000%	0.0000%	0.0000%	0.0000%	0.0000%	0.0000%
28	3.0	ALL OTHER CUSTOMER SERVICE	0	/LN 34	0	0	0	0	0	0	0	0	0	0	0	0	0	0
29		TOTAL SERVICES EXPENSE	155,507		0	0	103,993	0	51,513	0	0	0	0	0	0	0	0	0
30		% DISTRIBUTION	100.0000%		0.0000%	0.0000%	66.8738%	0.0000%	33.1262%	0.0000%	0.0000%	0.0000%	0.0000%	0.0000%	0.0000%	0.0000%	0.0000%	0.0000%
31		TOTAL CUSTOMER OPERATIONS EXPENSE	155,507		0	0	103,993	0	51,513	0	0	0	0	0	0	0	0	0
32		% DISTRIBUTION	100.0000%		0.0000%	0.0000%	66.8738%	0.0000%	33.1262%	0.0000%	0.0000%	0.0000%	0.0000%	0.0000%	0.0000%	0.0000%	0.0000%	0.0000%
33		CUSTOMER OPERATIONS EXCL MARKETING	155,507		0	0	103,993	0	51,513	0	0	0	0	0	0	0	0	0
34		% DISTRIBUTION	100.0000%		0.0000%	0.0000%	66.8738%	0.0000%	33.1262%	0.0000%	0.0000%	0.0000%	0.0000%	0.0000%	0.0000%	0.0000%	0.0000%	0.0000%

PUBLIC VERSION

AUREON_01302

2002 Copyright TIS, Inc. v1.9

CORPORATE OPERATIONS EXPENSE ALLOCATION

					COMMON LINE		TRAFFIC SENSITIVE					SPECIAL ACCESS						
									COMMON TRANSPORT		DEDICATED	NEL TERMINATION		CHANNEL MILEAGE			IX CATEGORY	
LN	A/C	DESCRIPTION	TOTAL COMPANY	SOURCE	LIMITED PAY	COMMON LINE	SWITCHING	INFO	TERM	FACILITY	TRANSPORT	ALLOCATED	TERM	TERM	FACILITY	B&C	MSG	P.L.
		BIG THREE EXPENSES																
1		PLANT SPECIFIC EXPENSE	16,617,051	A-9,LN 25	0	0	1,430,083	0	708,396	14,478,572	0	0	0	0	0		0	0
2		OTHER PLANT EXPENSE	0	A-10,LN 7	0	0	0	0	0	0	0	0	0	0	0		0	0
3		NETWORK OPERATIONS EXPENSE	1,027,226	A-10,LN 8	0	0	686,945	0	340,280	0	0	0	0	0	0		0	0
4		ACCESS CHARGE EXPENSE	0	A-10,LN 9													0	0
5		CUSTOMER OPERATIONS EXPENSE	155,507	A-11,LN 31	0	0	103,993	0	51,513	0	0	0	0	0	0	0	0	0
6		TOTAL BIG THREE EXPENSES	17,799,783		0	0	2,221,022	0	1,100,189	14,478,572	0	0	0	0	0	0	0	0
7		% DISTRIBUTION	100.0000%		0.0000%	0.0000%	12.4778%	0.0000%	6.1809%	81.3413%	0.0000%	0.0000%	0.0000%	0.0000%	0.0000%	0.0000%	0.0000%	0.0000%
		CORPORATE OPERATING EXPENSE																
8	6710	EXECUTIVE AND PLANNING	458,166	LN 7	0	0	57,169	0	28,319	372,678	0	0	0	0	0	0	0	0
9	6720	GENERAL AND ADMINISTRATIVE	2,266,482	LN 7	0	0	282,807	0	140,089	1,843,585	0	0	0	0	0	0	0	0
10		TOTAL CORPORATE OPERATIONS	2,724,648		0	0	339,976	0	168,408	2,216,264	0	0	0	0	0	0	0	0
11		% DISTRIBUTION	100.0000%		0.0000%	0.0000%	12.4778%	0.0000%	6.1809%	81.3413%	0.0000%	0.0000%	0.0000%	0.0000%	0.0000%	0.0000%	0.0000%	0.0000%
12		EQUAL ACCESS EXPENSE	0	DIRECT			0											
13	7500	INTEREST EXPENSE																
14		CAPITAL LEASE	0	A-3,LN 10	0	0	0	0	0	0	0	0	0	0	0	0	0	0
15		OTHER	0	A-3,LN 10	0	0	0	0	0	0	0	0	0	0	0	0	0	0
16		TOTAL	0		0	0	0	0	0	0	0	0	0	0	0	0	0	0
17		OTHER INCOME ADJUSTMENTS																
18		BASED ON PLANT	0	A-2,LN 10	0	0	0	0	0	0	0	0	0	0	0	0	0	0
19		BASED ON EXPENSE	0	LN 7	0	0	0	0	0	0	0	0	0	0	0	0	0	0
20		TOTAL	0		0	0	0	0	0	0	0	0	0	0	0	0	0	0
21		OPERATING TAXES																
22	7210	FEDERAL ITC AMORTIZATION	0	A-3,LN 10	0	0	0	0	0	0	0	0	0	0	0	0	0	0
23	7210	STATE ITC AMORTIZATION	0	A-3,LN 10	0	0	0	0	0	0	0	0	0	0	0	0	0	0
24	7240	OTHER OPERATING TAXES	200,946	A-3,LN 10	0	0	134,381	0	66,566	0	0	0	0	0	0	0	0	0
25		TOTAL OPERATING TAXES	200,946		0	0	134,381	0	66,566	0	0	0	0	0	0	0	0	0

PUBLIC VERSION

AUREON_01303

2002 Copyright TIS, Inc. v1.9

DEVELOPMENT OF JOINT USE FACILITIES ALLOCATION FACTORS

AL-1,1of1

					COMMON LINE		TRAFFIC SENSITIVE					SPECIAL ACCESS						
									COMMON TRANSPORT		DEDICATED	NEL TERMINATION		CHANNEL MILEAGE			IX CATEGORY	
LN	A/C	DESCRIPTION	TOTAL COMPANY	SOURCE	LIMITED PAY	COMMON LINE	SWITCHING	INFO	TERM	FACILITY	TRANSPORT	ALLOCATED	TERM	TERM	FACILITY	B&C	MSG	P.L.
1		EQUIVALENT ACCESS LINES - MSG COE	0		0	0						0						
2		% DISTRIBUTION	0.0000%		0.0000%	0.0000%						0.0000%						
3		EQUIVALENT ACCESS LINES - MSG CWF	0		0	0						0						
4		% DISTRIBUTION	0.0000%		0.0000%	0.0000%						0.0000%						
5		IX CIRCUIT TERMINATIONS - MSG COE	1,984						1,984		0							
6		% DISTRIBUTION	100.0000%						100.0000%		0.0000%							
7		IX CIRCUIT MILES - MSG CWF	993,337							993337.00	0.00							
8		% DISTRIBUTION	100.0000%							100.0000%	0.0000%							
		DISTRIBUTION FACTORS																
9		STD WORK SECONDS - MANUAL BOARDS	100.0000%				0.0000%	0.0000%									100.0000%	
10		STD WORK SECONDS - TSPS	100.0000%				0.0000%	0.0000%									100.0000%	
11		STD WORK SECONDS - OPERATORS	100.0000%				0.0000%	0.0000%									100.0000%	
12		END USER SVC ORDER CONTACTS	0.0000%										0.0000%			0.0000%	0.0000%	
13		END USER PAYMENT & COLLECTION	0.0000%			0.0000%							0.0000%			0.0000%	0.0000%	
14		END USER BILLING INQUIRY CONTACTS	0.0000%			0.0000%							0.0000%			0.0000%	0.0000%	
15		IX CARRIER SVC ORDER CONTACTS	100.0000%		0.0000%	0.0000%	66.8738%	0.0000%	33.1262%	0.0000%	0.0000%		0.0000%			0.0000%		
16		IX CARRIER PAYMENT & COLLECTION	100.0000%		0.0000%	0.0000%	66.8738%	0.0000%	33.1262%	0.0000%	0.0000%		0.0000%			0.0000%		
17		IX CARRIER BILLING INQUIRY CONTACTS	100.0000%		0.0000%	0.0000%	66.8738%	0.0000%	33.1262%	0.0000%	0.0000%		0.0000%			0.0000%		
18		PUBLIC TELEPHONE REVENUE	0.0000%		0.0000%	0.0000%												
19		END USER BILLING & COLLECTION	0.0000%													0.0000%		
20		OPERATOR SERVICES UNDER CONTRACT	0.0000%				0.0000%	0.0000%									0.0000%	

2002 Copyright TIS, Inc. v1.9

PUBLIC VERSION

AUREON_01304

REVENUE REQUIREMENT SUMMARY

S-1,1of1

LN	ALLOCATION RATIOS		TOTAL COMPANY	ALLOCATION BASIS	INTERSTATE MSG TOLL INTRALATA	INTERLATA	OTHER
	REVENUE REQUIREMENT SUMMARY						
1	NET INVESTMENT FOR SETTLEMENTS		9,082,475	NOTE A	41,642	7,493,317	1,547,516
2	RATE OF RETURN				11.25%	11.25%	9.50%
3	RETURN ON INVESTMENT		994,697	LN1*LN 2	4,685	842,998	147,014
4	ALLOWANCE FOR FUNDS USED DURING CONSTR		0	S-8,LN 29	0	0	0
5	NET RETURN FOR SETTLEMENTS		994,697	LN3-LN4	4,685	842,998	147,014
6	TOTAL ITC AMORTIZATION		0	S-12,LN 28+29	0	0	0
7	FEDERAL OPERATING INCOME TAX	(ACTUAL)	0	S-12,LN 30	0	0	0
8	FEDERAL OPERATING INCOME TAX	(OPTION)	512,420	LN28-LN11	2,413	434,272	75,734
9	STATE AND LOCAL INCOME TAX	(ACTUAL)	0	S-12,LN 31	0	0	0
10	STATE AND LOCAL INCOME TAX	(OPTION)	170,578	LN 33	803	144,564	25,211
11	PROVISION FOR DEFERRED INCOME TAX		0	S-12,LN 33	0	0	0
13	OPERATING EXPENSE AND TAX		29,698,970	S-8,LN 18	129,517	24,099,908	5,469,545
14	NONOPERATING EXPENSE		146,219	S-8,LN 23	629	118,117	27,473
15	UNCOLLECTIBLES		3,120,000	S-8,LN 28	16,083	2,877,492	226,425
16	BASIS FOR GROSS RECEIPTS TAX		34,642,883		154,130	28,517,350	5,971,403
17	GROSS RECEIPTS TAX RATE	(GROSS UP)			0	0	0
18	GROSS RECEIPTS TAX		0		0	0	0
19	TOTAL REVENUE REQUIREMENT		34,642,883		154,130	28,517,350	5,971,403

NOTE A: INCLUDES NET TEL PLANT FROM SCH S-2,LN 33 LESS A/C's 2004 ,2006 ,2007 AND 1402 OTHER THAN RTB STOCK.

	OPTIONAL GROSS UP INCOME TAX CALCULATION						
20	RETURN ON INVESTMENT		994,697	LN 3	4,685	842,998	147,014
21	INTEREST AND RELATED ITEMS		0	S-12,LN 19	0	0	0
22	OTHER INCOME ADJUSTMENTS		0	S-12,LN 24+25	0	0	0
23	TOTAL INCOME ADJUSTMENTS		0	LN 21+22	0	0	0
24	FEDERAL ITC AMORTIZATION		0	S-12,LN 28	0	0	0
25	FEDERAL TAXABLE INCOME		1,507,117		7,098	1,277,270	222,748
26	FEDERAL INCOME TAX @	34.00%	512,420	LN 25*FIT	2,413	434,272	75,734
27	FEDERAL SURTAX ALLOCATION		0	S-2,LN 34	0	0	0
28	NET FEDERAL INCOME TAX BEFORE ITC		512,420	LN26-LN27	2,413	434,272	75,734
29	STATE ITC AMORTIZATION		0	S-12,LN 29	0	0	0
30	STATE TAXABLE INCOME		1,421,485		6,695	1,204,698	210,092
31	STATE INCOME TAX @	12.00%	170,578	LN 30*SIT	803	144,564	25,211
32	STATE SURTAX EXEMPTION		0	S-2,LN 34	0	0	0
33	NET STATE INCOME TAX BEFORE ITC		170,578		803	144,564	25,211

PROPRIETARY INFORMATION

2002 Copyright TIS, Inc. v1.9

S-2,1of1

SUMMARY OF NET TELEPHONE PLANT, M&S AND WORKING CAPITAL

S-2,1of1

LN	ALLOCATION RATIOS		TOTAL COMPANY	ALLOCATION BASIS	INTERSTATE MSG TOLL INTRALATA	INTERLATA	OTHER
	NET INVESTMENT SUMMARY						
1	GENERAL SUPPORT FACILITIES	2110	8,036,575	S-3,LN 10	37,169	6,649,903	1,349,504
2	CENTRAL OFFICE SWITCHING EQUIPMEI	2210	34,002,891	S-4,LN 52	157,262	28,135,856	5,709,774
3	OPERATOR SYSTEMS EQUIPMENT	2220	0	S-4,LN 41	0	0	0
4	CENTRAL OFFICE TRANSMISSION EQUIP	2230	0	S-4,LN 78	0	0	0
5	INFORMATION ORIG/TERM EQUIPMENT	2310	0	S-5,LN 17	0	0	0
6	CABLE AND WIRE FACILITIES	2410	0	S-5,LN 42	0	0	0
7	TANGIBLE ASSETS	2680	1,430,198	S-3,LN 29	6,615	1,183,424	240,159
8	INTANGIBLE ASSETS	2690	0	S-3,LN 36	0	0	0
9	TOTAL PLANT IN SERVICE A/C 2001		43,469,665		201,045	35,969,183	7,299,436
10	% DISTRIBUTION		100.0000%		0.4625%	82.7455%	16.7920%
11	PROPERTY HELD FOR FUTURE USE	2002	0	S-6,LN 9	0	0	0
12	PLANT UNDER CONSTR - SHORT TERM	2003	119,905	S-6,LN 15	555	99,216	20,134
13	PLANT UNDER CONSTR - LONG TERM	2004	0	S-6,LN 21	0	0	0
14	TELEPHONE PLANT ADJUSTMENT	2005	0	S-6,LN 27	0	0	0
15	NONOPERATING PLANT	2006	0	DIRECT			
16	GOODWILL	2007	0	DIRECT			
17	TOTAL PROPERTY, PLANT & EQUIPMENT		43,589,569		201,600	36,068,399	7,319,571
18	% DISTRIBUTION		100.0000%		0.4625%	82.7455%	16.7920%
19	ACCUM DEPRECIATION - PLANT IN SERV	3100	32,223,449	S-7,LN 18	149,032	26,663,448	5,410,969
20	ACCUM DEPRECIATION - FUTURE USE	3200	0	S-7,LN 19	0	0	0
21	ACCUM AMORTIZATION - TANGIBLE PRO	3400	913,908	S-7,LN 23	4,227	756,217	153,464
22	ACCUM AMORTIZATION - INTANGIBLE PF	3500	0	S-7,LN 24	0	0	0
23	ACCUM AMORTIZATION - TEL PLANT ADJ	3600	0	S-7,LN 25	0	0	0
24	OPERATING DEFERRED INCOME TAX - N	VAR	2,490,632	S-7,LN 32	11,519	2,060,886	418,228
25	OTHER DEFERRED CREDITS - NET	4360	0	S-7,LN 38	0	0	0
26	NET TELEPHONE PLANT		7,961,580		36,822	6,587,848	1,336,910
27	% DISTRIBUTION		100.0000%		0.4625%	82.7455%	16.7920%
28	MATERIALS AND SUPPLIES	1220	0	S-6,LN 31	0	0	0
29	INVESTMENT IN NONAFFILIATED CO'S	1402	0	S-6,LN 35	0	0	0
30	EQUAL ACCESS EQUIPMENT	1439	0	S-6,LN 36	0	0	0
31	OTHER JURISDICTIONAL ASSETS	1500	0	S-6,LN 37	0	0	0
32	CASH WORKING CAPITAL	XXXX	1,120,895	S-3,LN 3	4,820	905,469	210,605
33	NET TEL PLANT, M&S AND CASH WORKING CAPITAL		9,082,475		41,642	7,493,317	1,547,516
34	% DISTRIBUTION		100.0000%		0.4585%	82.5030%	17.0385%

2002 Copyright TIS, Inc. v1.9

S-8,1of1

SUMMARY OF OPERATING EXPENSE AND TAX

S-8,1of1

LN	ALLOCATION RATIOS		TOTAL COMPANY	ALLOCATION BASIS	INTERSTATE MSG TOLL INTRALATA	INTERLATA	OTHER
	OPERATING EXPENSE AND TAX SUMMARY						
1	NETWORK SUPPORT EXPENSE	6110	0	S-9,LN 7	0	0	0
2	GENERAL SUPPORT EXPENSE	6120	1,085,857	S-9,LN 8	5,022	898,498	182,337
3	CENTRAL OFFICE EXPENSE	6210	1,484,184	S-9,LN 15	6,864	1,228,095	249,224
4	INFORMATION ORIG/TERM EXPENSE	6310	0	S-9,LN 21	0	0	0
5	CABLE AND WIRE FACILITIES EXPENSE	6410	17,882,154	S-9,LN 25	76,035	14,402,537	3,403,582
6	OTHER PLANT EXPENSE	6510	0	S-10,LN 11	0	0	0
7	NETWORK OPERATIONS EXPENSE	6530	1,234,528	S-10,LN 13	5,710	1,021,516	207,302
8	ACCESS CHARGE EXPENSE	6540	0	S-10,LN 14	0	0	0
9	MARKETING EXPENSE	6610	0	S-11,LN 13	0	0	0
10	SERVICES EXPENSE	6620	204,532	S-11,LN 44	864	154,642	49,025
11	EXECUTIVE AND PLANNING EXPENSE	6710	564,168	S-12,LN 8+9	2,426	455,740	106,002
12	GENERAL AND ADMINISTRATIVE EXPENS	6720	2,790,857	S-12,LN 11+12	12,002	2,254,480	524,375
13	SUBTOTAL OPERATING EXPENSES		25,246,280		108,923	20,415,508	4,721,848
14	% DISTRIBUTION		100.0000%		0.4314%	80.8654%	18.7031%
15	DEPRECIATION AND AMORTIZATION	6560	4,211,191	S-10,LN 22+29	19,477	3,484,570	707,144
16	OTHER OPERATING TAX	7240	241,499	S-12,LN 32	1,117	199,829	40,553
17	EQUAL ACCESS EXPENSE		0	S-12,LN 15	0	0	0
18	TOTAL OPERATING EXPENSE AND TAX		29,698,970		129,517	24,099,908	5,469,545
19	% DISTRIBUTION		100.0000%		0.4361%	81.1473%	18.4166%
	NON OPERATING EXPENSE	7370					
20	ABANDONED CONSTRUCTION		0	S-2,LN 10	0	0	0
21	CONTRIBUTIONS		146,219	S-12,LN 14	629	118,117	27,473
22	OTHER NON OPERATING EXPENSE		0	DIRECT			
23	TOTAL NON OPERATING EXPENSE		146,219		629	118,117	27,473
24	% DISTRIBUTION		100.0000%		0.4300%	80.7809%	18.7890%
	UNCOLLECTIBLES						
25	END USER MSG TOLLS	5310	0	DIRECT	0	0	0
26	END USER COMMON LINE	5320	0	DIRECT	0	0	0
27	IX CARRIER	5330	3,120,000	S-11,LN 5	16,083	2,877,492	226,425
28	TOTAL UNCOLLECTIBLES		3,120,000		16,083	2,877,492	226,425
29	ALLOWANCE FOR FUNDS USED DURING	7340	0	S-12,LN 3	0	0	0

PROPRIETARY INFORMATION

2002 Copyright TIS, Inc. v1.9

S-1,1of1

REVENUE REQUIREMENT SUMMARY

S-1,1of1

LN	DESCRIPTION	A/C	CAT	TOTAL COMPANY	ALLOCATION BASIS	ACCESS DIVISION	ALL OTHER
	REVENUE REQUIREMENT SUMMARY						
1	NET INVESTMENT FOR SETTLEMENTS			36,668,672	NOTE A	9,082,475	27,586,197
2	RATE OF RETURN					10.9518%	9.7076%
3	RETURN ON INVESTMENT			3,672,668	LN1*LN 2	994,697	2,677,971
4	ALLOWANCE FOR FUNDS USED DURING CONSTR			0	S-8,LN 30	-	-
5	NET RETURN FOR SETTLEMENTS			3,672,668	LN 3-LN 4	994,697	2,677,971
6	TOTAL ITC AMORTIZATION			0	S-12,LN 32	-	-
7	FEDERAL OPERATING INCOME TAX		(ACTUAL)	0		-	-
8	FEDERAL OPERATING INCOME TAX		(OPTION)	1,891,981	LN28-LN11	512,420	1,379,561
9	STATE AND LOCAL INCOME TAX		(ACTUAL)	0		-	-
10	STATE AND LOCAL INCOME TAX		(OPTION)	629,817	LN 32	170,578	459,239
11	PROVISION FOR DEFERRED INCOME TAX			0	S-12,LN 36	-	-
13	OPERATING EXPENSE AND TAX			96,257,517	S-8,LN 20	29,698,970	66,558,547
14	NONOPERATING EXPENSE			409,000	S-8,LN 25	146,219	262,781
15	UNCOLLECTIBLES			3,600,000	S-8,LN 29	3,120,000	480,000
16	BASIS FOR GROSS RECEIPTS TAX			106,460,983		34,642,883	71,818,100
17	GROSS RECEIPTS TAX RATE		(GROSS UP)			-	-
18	GROSS RECEIPTS TAX			0		-	-
19	TOTAL REVENUE REQUIREMENT			106,460,983		34,642,883	71,818,100

NOTE A: INCLUDES NET TEL PLANT FROM SCH S-2,LN 33 LESS A/C's 2004 ,2006 ,2007 AND 1402.

******* **** ********** ********** ********** ********** ********** ********** ********** **********

	OPTIONAL GROSS UP INCOME TAX CALCULATION						
20	RETURN ON INVESTMENT			3,672,668	LN 3	994,697	2,677,971
21	INTEREST AND RELATED ITEMS			0	S-12,LN 22	-	-
22	OTHER INCOME ADJUSTMENTS			0	S-12,LN 27+28	-	-
23	TOTAL INCOME ADJUSTMENTS			0	LN 21+22	-	-
24	FEDERAL ITC AMORTIZATION			0	S-12,LN 32	-	-
25	FEDERAL TAXABLE INCOME			5,564,649		1,507,117	4,057,532
26	FEDERAL INCOME TAX	@	34.00%	1,891,981	LN 25*FIT	512,420	1,379,561
27	FEDERAL SURTAX ALLOCATION			0	S-2,LN 32	-	-
28	NET FEDERAL INCOME TAX BEFORE ITC			1,891,981	LN26-LN27	512,420	1,379,561
29	STATE TAXABLE INCOME			5,248,476		1,421,485	3,826,991
30	STATE INCOME TAX	@	12.00%	629,817	LN 29*SIT	170,578	459,239
31	STATE SURTAX EXEMPTION			0	S-2,LN 32	-	-
32	NET STATE INCOME TAX BEFORE ITC			629,817	LN30-LN31	170,578	459,239

PROPRIETARY INFORMATION

2002 Copyright TIS, Inc. v1.9

S-2,1of1 SUMMARY OF NET TELEPHONE PLANT, M&S AND WORKING CAPITAL S-2,1of1

LN	DESCRIPTION	A/C	CAT	TOTAL COMPANY	ALLOCATION BASIS	ACCESS DIVISION	ALL OTHER
	NET INVESTMENT SUMMARY						
1	GENERAL SUPPORT FACILITIES	2110		20,164,542	S-3,LN 27	8,036,575	12,127,967
2	CENTRAL OFFICE SWITCHING EQUIPME	2210		54,493,426	S-4,LN 17	34,002,891	20,490,535
3	CENTRAL OFFICE TRANSMISSION EQUIF	2230		49,116,717	S-4,LN 31	0	49,116,717
4	CABLE AND WIRE FACILITIES	2410		26,818,101	S-5,LN 16	0	26,818,101
5	TANGIBLE ASSETS	2680		3,588,505	S-3,LN 54	1,430,198	2,158,307
6	INTANGIBLE ASSETS	2690		0	S-3,LN 61	0	0
7	TOTAL PLANT IN SERVICE A/C 2001			154,181,291		43,469,665	110,711,626
8	% DISTRIBUTION			100.0000%		28.1939%	71.8061%
9	PROPERTY HELD FOR FUTURE USE	2002		0	S-6,LN 9	0	0
10	PLANT UNDER CONSTR - SHORT TERM	2003		425,286	S-6,LN 15	119,905	305,381
11	PLANT UNDER CONSTR - LONG TERM	2004		0	S-6,LN 21	0	0
12	TELEPHONE PLANT ADJUSTMENT	2005		0	S-6,LN 27	0	0
13	NONOPERATING PLANT	2006		2,173,393	DIRECT		
14	GOODWILL	2007		0	DIRECT		
15	TOTAL PROPERTY, PLANT & EQUIPMENT			156,779,970		43,589,569	113,190,401
16	% DISTRIBUTION			100.0000%		27.8030%	72.1970%
17	ACCUM DEPRECIATION - PLANT IN SERV	3100		111,174,505	S-7,LN 30	32,223,449	78,951,056
18	ACCUM DEPRECIATION - FUTURE USE	3200		0	S-7,LN 31	0	0
19	ACCUM AMORTIZATION - TANGIBLE PRC	3400		2,293,083	S-7,LN 36	913,908	1,379,175
20	ACCUM AMORTIZATION - INTANGIBLE PI	3500		0	S-7,LN 37	0	0
21	ACCUM AMORTIZATION - TEL PLANT AD.	3600		0	S-7,LN 38	0	0
22	OPERATING DEFERRED INCOME TAX - N	VAR		8,921,884	S-7,LN 44	2,490,632	6,431,252
23	OTHER DEFERRED CREDITS - NET	4360		0	S-7,LN 49	0	0
24	NET TELEPHONE PLANT			34,390,498		7,961,580	26,428,918
25	% DISTRIBUTION			100.0000%		23.1505%	76.8495%
26	MATERIALS AND SUPPLIES	1220		757,115	S-6,LN 32	0	757,115
27	PREPAID EXPENSES	1300		0	S-6,LN 37	0	0
28	INVESTMENT IN NONAFFILIATED CO'S	1402		119,414,084	S-6,LN 38	0	119,414,084
29	OTHER JURISDICTIONAL ASSETS	1500		0	S-6,LN 39	0	0
30	CASH WORKING CAPITAL	XXXX		3,694,452	COMPUTED	1,120,895	2,573,557
31	NET TEL PLANT, M&S AND CASH WORKING CAPITAL			158,256,149		9,082,475	149,173,674
32	% DISTRIBUTION			100.0000%		5.7391%	94.2609%

 2002 Copyright TIS, Inc. v1.9

S-8,1of1

SUMMARY OF OPERATING EXPENSE AND TAX

S-8,1of1

LN	DESCRIPTION	A/C	CAT	TOTAL COMPANY	ALLOCATION BASIS	ACCESS DIVISION	ALL OTHER
	OPERATING EXPENSE AND TAX SUMMARY						
1	NETWORK SUPPORT EXPENSE	6110		211,817	S-9,LN 13-23	86,337	125,480
2	GENERAL SUPPORT EXPENSE	6120		2,750,855	S-9,LN 24-27	999,520	1,751,335
3	CENTRAL OFFICE EXPENSE	6210		4,024,913	S-9,LN 33	1,484,184	2,540,729
4	CABLE AND WIRE FACILITIES EXPENSE	6410		25,211,234	S-9,LN 35	17,882,154	7,329,080
5	OTHER PLANT EXPENSE	6510		16,593,538	S-10,LN 6	0	16,593,538
6	NETWORK OPERATIONS EXPENSE	6530		5,966,106	S-10,LN 13	1,234,528	4,731,578
7	ACCESS CHARGE EXPENSE	6540		10,850,430	S-10,LN 15	0	10,850,430
8	MARKETING EXPENSE	6610		4,132,682	S-11,LN 15	0	4,132,682
9	SERVICES EXPENSE	6620		3,215,883	S-11,LN 39	204,532	3,011,351
10	EXECUTIVE AND PLANNING EXPENSE	6710		1,303,905	S-12,LN 7	564,168	739,737
11	GENERAL AND ADMINISTRATIVE EXPEN	6720		6,870,466	S-12,LN 8-15	2,790,857	4,079,609
12	SUBTOTAL OPERATING EXPENSES			81,131,829		25,246,280	55,885,549
13	% DISTRIBUTION			100.0000%		31.1176%	0.68882398
14	DEPRECIATION - PLANT IN SERVICE	6561		14,309,688	S-10,LN 33	4,211,191	10,098,497
15	DEPRECIATION - FUTURE USE	6562		0	S-10,LN 34	0	0
16	AMORTIZATION - TANGIBLES	6563		0	S-3,LN42-44	0	0
17	AMORTIZATION - INTANGIBLES	6564		0	S-3,LN 45	0	0
18	AMORTIZATION - OTHER	6565		0	S-3,LN 46	0	0
19	OTHER OPERATING TAX	7240		816,000	S-12,LN 35	241,499	574,501
20	TOTAL OPERATING EXPENSE AND TAX			96,257,517		29,698,970	66,558,547
21	% DISTRIBUTION			100.0000%		30.8537%	69.1463%
	NON OPERATING EXPENSE	7370					
22	ABANDONED CONSTRUCTION			0	S-2,LN 8	0	0
23	CONTRIBUTIONS			409,000	S-12,LN 2	146,219	262,781
24	ALL OTHER			0	S-12,LN 2	0	0
25	TOTAL NON OPERATING EXPENSE			409,000		146,219	262,781
26	% DISTRIBUTION			100.0000%		35.7503%	64.2497%
	UNCOLLECTIBLES						
27	END USER MSG TOLLS	5310		480,000	DIRECT	XXX	480,000
28	IX CARRIER	5330		3,120,000	DIRECT	3,120,000	
29	TOTAL UNCOLLECTIBLES			3,600,000		3,120,000	480,000
30	ALLOWANCE FOR FUNDS USED DURING	7340		0	S-12,LN 4	0	0

2002 Copyright TIS, Inc. v1.9

COS-1(P
Filing Da 6/16/2010
Filing Entity: Iowa Network Access Division

COSA: INIAAN10

Rate-of Return TRP
Cost Analysis Summary
Test Year, 7/10 - 6/11

		Total Company (A)	Part 64 Adjustments (B)	Other Adjustments (C)	Subject to Separations (D)	Total Interstate (E)	Billing & Collection (F)
	Revenues						
100	Network Access	n/a	n/a	n/a	n/a	n/a	n/a
110	Uncollectibles	n/a	n/a	n/a	n/a	n/a	n/a
120	Common Line Support	n/a	n/a	n/a	n/a	n/a	n/a
130	Long Term	n/a	n/a	n/a	n/a	n/a	n/a
140	Transitional	n/a	n/a	n/a	n/a	n/a	n/a
150	Miscellaneous	n/a	n/a	n/a	n/a	n/a	n/a
160	Net Revenues	n/a	n/a	n/a	n/a	n/a	n/a
	Expenses						
170	Plant Specific	n/a	n/a	n/a	n/a	16,617,051	0
171	Network Support	0	0	0	0	0	0
172	General Support	1,085,857	0	0	1,085,857	903,520	0
173	Central Office	1,484,184	0	0	1,484,184	1,234,959	0
174	Operator Systems	0	0	0	0	0	0
175	COE Switching	1,484,184	0	0	1,484,184	1,234,959	0
176	COE Transmission	0	0	0	0	0	0
177	IOT	0	0	0	0	0	0
178	Cable & Wire Facilities	17,882,154	0	0	17,882,154	14,478,572	0
180	Plant Non-Sp. Less Dep/Amor	n/a	n/a	n/a	n/a	1,027,226	0
190	Depreciation / Amortization	4,211,191	0	0	4,211,191	3,504,047	0
200	Customer Operations	n/a	n/a	n/a	n/a	155,507	0
201	Marketing	0	0	0	0	0	0
202	Local Business Office	204,532	0	0	204,532	155,507	0
203	Revenue Accounting	0	0	0	0	0	0
204	Other Billing & Collection	0	0	0	0	0	0
210	Access	n/a	n/a	n/a	n/a	0	n/a
220	Corporate Operations	n/a	n/a	n/a	n/a	2,724,648	0
230	AFUDC	n/a	n/a	n/a	n/a	n/a	n/a
240	Other Exp. & Adjustments	n/a	n/a	n/a	n/a	3,012,321	0
250	Taxes Other than FIT	n/a	n/a	n/a	n/a	346,313	0
260	Total Exp and Other Taxes	n/a	n/a	n/a	n/a	27,387,113	0
	FIT Adjustments						
270	Adjustment for FIT	0	0	0	0	0	0
280	Amortized ITC	0	0	0	0	0	0
290	Federal Income Taxes	n/a	n/a	n/a	n/a	0	n/a
300	Total Expenses & Taxes	n/a	n/a	n/a	n/a	27,387,113	n/a
	Telephone Plant in Service						
310	General Support	8,036,575	0	0	8,036,575	6,687,072	0
320	Central Office Equip-Switch	34,002,891	0	0	34,002,891	28,293,118	0
321	Operator Systems	0	0	0	0	0	0
322	Tandem Switching	0	0	0	0	0	0
323	Local Switching Cat. 3	0	0	0	0	0	0
324	Equal Access	34,002,891	0	0	34,002,891	28,293,118	0
330	Central Office Equip-Trans	0	0	0	0	0	0
331	Subscriber Lines	0	0	0	0	0	0
332	Exchange Circuit	0	0	0	0	0	0
333	Interexchange Circuit	0	0	0	0	0	0
334	Host Remote	0	0	0	0	0	0
340	Cable & Wire	0	0	0	0	0	0
341	Subscriber Lines	0	0	0	0	0	0
342	Exchange	0	0	0	0	0	0
343	Interexchange	0	0	0	0	0	0
344	Host Remote	0	0	0	0	0	0
350	Info Orig/Term Equipment	0	0	0	0	0	0
360	Amortizable Assets	1,430,198	0	0	1,430,198	1,190,039	0
370	Total Plant In Service	43,469,664	0	0	43,469,664	36,170,229	0
	Adjustments to TPIS						
380	Depr / Amor Reserve	33,137,357	0	0	33,137,357	27,572,924	0
390	Accum Deferred Income Tax	2,490,632	0	0	2,490,632	2,072,405	0
400	Other Rate Base Adjust.	n/a	n/a	n/a	n/a	1,010,060	0
	Return Data						
410	Average Rate Base	n/a	n/a	n/a	n/a	7,534,960	n/a
420	Return	n/a	n/a	n/a	n/a	n/a	n/a
430	Rate of Return	n/a	n/a	n/a	n/a	n/a	n/a

PUBLIC VERSION

AUREON_01311

COS-1(P)
Filing Date: 6/16/2010
Filing Entity: Iowa Network Access Division

COSA: INIAAN10

		Interstate Inter-exchange (G)	ROR Regulated I/S Access (H)	Pay Phone (I)	Inside Wire (J)	BFP (K)	Total Common Line (L)
	Revenues						
100	Network Access	n/a	28,516,102	0	0	0	0
110	Uncollectibles	n/a	0	0	0	0	0
120	Common Line Support	n/a	0	0	0	0	0
130	Long Term	n/a	0	0	0	0	0
140	Transitional	n/a	0	0	0	0	0
150	Miscellaneous	n/a	41,058	0	0	0	0
160	Net Revenues	n/a	28,557,160	0	0	0	0
	Expenses						
170	Plant Specific	0	16,617,051	0	0	0	0
171	Network Support	0	0	0	0	0	0
172	General Support	0	903,520	0	0	0	0
173	Central Office	0	1,234,959	0	0	0	0
174	Operator Systems	0	0	0	0	0	0
175	COE Switching	0	1,234,959	0	0	0	0
176	COE Transmission	0	0	0	0	0	0
177	IOT	0	0	0	0	0	0
178	Cable & Wire Facilities	0	14,478,572	0	0	0	0
180	Plant Non-Sp. Less Dep/Amor	0	1,027,226	0	0	0	0
190	Depreciation / Amortization	0	3,504,047	0	0	0	0
200	Customer Operations	0	155,507	0	0	0	0
201	Marketing	0	0	0	0	0	0
202	Local Business Office	0	155,507	0	0	0	0
203	Revenue Accounting	0	0	0	0	0	0
204	Other Billing & Collection	0	0	0	0	0	0
210	Access	0	n/a	n/a	n/a	n/a	n/a
220	Corporate Operations	0	2,724,648	0	0	0	0
230	AFUDC	n/a	0	0	0	0	0
240	Other Exp. & Adjustments	0	3,012,321	0	0	0	0
250	Taxes Other than FIT	0	346,313	0	0	0	0
260	Total Exp and Other Taxes	0	27,387,113	0	0	0	0
	FIT Adjustments						
270	Adjustment for FIT	0	0	0	0	0	0
280	Amortized ITC	0	0	0	0	0	0
290	Federal Income Taxes	n/a	397,816	0	0	0	0
300	Total Expenses & Taxes	n/a	27,784,929	0	0	0	0
	Telephone Plant in Service						
310	General Support	0	6,687,072	0	0	0	0
320	Central Office Equip-Switch	0	28,293,118	0	0	0	0
321	Operator Systems	0	0	0	0	0	0
322	Tandem Switching	0	0	0	0	0	0
323	Local Switching Cat. 3	0	0	0	0	0	0
324	Equal Access	0	28,293,118	0	0	0	0
330	Central Office Equip-Trans	0	0	0	0	0	0
331	Subscriber Lines	0	0	0	0	0	0
332	Exchange Circuit	0	0	0	0	0	0
333	Interexchange Circuit	0	0	0	0	0	0
334	Host Remote	0	0	0	0	0	0
340	Cable & Wire	0	0	0	0	0	0
341	Subscriber Lines	0	0	0	0	0	0
342	Exchange	0	0	0	0	0	0
343	Interexchange	0	0	0	0	0	0
344	Host Remote	0	0	0	0	0	0
350	Info Orig/Term Equipment	0	0	0	0	0	0
360	Amortizable Assets	0	1,190,039	0	0	0	0
370	Total Plant In Service	0	36,170,229	0	0	0	0
	Adjustments to TPIS						
380	Depr / Amor Reserve	0	27,572,924	0	0	0	0
390	Accum Deferred Income Tax	0	2,072,405	0	0	0	0
400	Other Rate Base Adjust.	0	1,010,060	0	0	0	0
	Return Data						
410	Average Rate Base	n/a	7,534,960	0	0	0	0
420	Return	n/a	772,231	0	0	0	0
430	Rate of Return	11.25%	10.25%	0.00%	0.00%	0.00%	0.00%

PUBLIC VERSION

AUREON_01312

		Local Switching (M)	Equal Access (N)	SS7 (O)	Information (P)	Tandem Switching (Q)	Local Transport (R)
	Revenues						
100	Network Access	0	0	0	0	0	28,516,102
110	Uncollectibles	0	0	0	0	0	0
120	Common Line Support	0	n/a	n/a	n/a	n/a	n/a
130	Long Term	0	n/a	n/a	n/a	n/a	n/a
140	Transitional	0	n/a	n/a	n/a	n/a	n/a
150	Miscellaneous	0	0	0	0	0	41,058
160	Net Revenues	0	0	0	0	0	28,557,160
	Expenses						
170	Plant Specific	0	0	0	0	0	16,617,051
171	Network Support	0	0	0	0	0	0
172	General Support	0	0	0	0	0	903,520
173	Central Office	0	0	0	0	0	1,234,959
174	Operator Systems	0	0	0	0	0	0
175	COE Switching	0	0	0	0	0	1,234,959
176	COE Transmission	0	0	0	0	0	0
177	IOT	0	0	0	0	0	0
178	Cable & Wire Facilities	0	0	0	0	0	14,478,572
180	Plant Non-Sp. Less Dep/Amor	0	0	0	0	0	1,027,226
190	Depreciation / Amortization	0	0	0	0	0	3,504,047
200	Customer Operations	0	0	0	0	0	155,507
201	Marketing	0	0	0	0	0	0
202	Local Business Office	0	0	0	0	0	0
203	Revenue Accounting	0	0	0	0	0	0
204	Other Billing & Collection	0	0	0	0	0	0
210	Access	n/a	n/a	n/a	n/a	n/a	n/a
220	Corporate Operations	0	0	0	0	0	2,724,648
230	AFUDC	0	0	0	0	0	0
240	Other Exp. & Adjustments	0	0	0	0	0	3,012,321
250	Taxes Other than FIT	0	0	0	0	0	346,313
260	Total Exp and Other Taxes	0	0	0	0	0	27,387,113
	FIT Adjustments						
270	Adjustment for FIT	0	0	0	0	0	0
280	Amortized ITC	0	0	0	0	0	0
290	Federal Income Taxes	0	0	0	0	0	397,816
300	Total Expenses & Taxes	0	0	0	0	0	27,784,929
	Telephone Plant in Service						
310	General Support	0	0	0	0	0	6,687,072
320	Central Office Equip-Switch	0	0	0	0	0	28,293,118
321	Operator Systems	0	0	0	0	0	0
322	Tandem Switching	0	0	0	0	0	0
323	Local Switching Cat. 3	0	0	0	0	0	0
324	Equal Access	0	0	0	0	0	28,293,118
330	Central Office Equip-Trans	0	0	0	0	0	0
331	Subscriber Lines	0	0	0	0	0	0
332	Exchange Circuit	0	0	0	0	0	0
333	Interexchange Circuit	0	0	0	0	0	0
334	Host Remote	0	0	0	0	0	0
340	Cable & Wire	0	0	0	0	0	0
341	Subscriber Lines	0	0	0	0	0	0
342	Exchange	0	0	0	0	0	0
343	Interexchange	0	0	0	0	0	0
344	Host Remote	0	0	0	0	0	0
350	Info Orig/Term Equipment	0	0	0	0	0	0
360	Amortizable Assets	0	0	0	0	0	1,190,039
370	Total Plant In Service	0	0	0	0	0	36,170,229
	Adjustments to TPIS						
380	Depr / Amor Reserve	0	0	0	0	0	27,572,924
390	Accum Deferred Income Tax	0	0	0	0	0	2,072,405
400	Other Rate Base Adjust.	0	0	0	0	0	1,010,060
	Return Data						
410	Average Rate Base	0	0	0	0	0	7,534,960
420	Return	0	0	0	0	0	772,231
430	Rate of Return	0.00%	0.00%	0.00%	0.00%	0.00%	10.25%

PUBLIC VERSION

AUREON_01313

		Host Remote (S)	Total Switched Traffic Sensitive (T)	Special Access (U)
	Revenues			
100	Network Access	0	28,516,102	0
110	Uncollectibles	0	0	0
120	Common Line Support	n/a	n/a	n/a
130	Long Term	n/a	n/a	n/a
140	Transitional	n/a	n/a	n/a
150	Miscellaneous	0	41,058	0
160	Net Revenues	0	28,557,160	0
	Expenses			
170	Plant Specific	0	16,617,051	0
171	Network Support	0	0	0
172	General Support	0	903,520	0
173	Central Office	0	1,234,959	0
174	Operator Systems	0	0	0
175	COE Switching	0	1,234,959	0
176	COE Transmission	0	0	0
177	IOT	0	0	0
178	Cable & Wire Facilities	0	14,478,572	0
180	Plant Non-Sp. Less Dep/Amor	0	1,027,226	0
190	Depreciation / Amortization	0	3,504,047	0
200	Customer Operations	0	155,507	0
201	Marketing	0	0	0
202	Local Business Office	0	0	0
203	Revenue Accounting	0	0	0
204	Other Billing & Collection	0	0	0
210	Access	n/a	n/a	n/a
220	Corporate Operations	0	2,724,648	0
230	AFUDC	0	0	0
240	Other Exp. & Adjustments	0	3,012,321	0
250	Taxes Other than FIT	0	346,313	0
260	Total Exp and Other Taxes	0	27,387,113	0
	FIT Adjustments			
270	Adjustment for FIT	0	0	0
280	Amortized ITC	0	0	0
290	Federal Income Taxes	0	397,816	0
300	Total Expenses & Taxes	0	27,784,929	0
	Telephone Plant in Service			
310	General Support	0	6,687,072	0
320	Central Office Equip-Switch	0	28,293,118	0
321	Operator Systems	0	0	0
322	Tandem Switching	0	0	0
323	Local Switching Cat. 3	0	0	0
324	Equal Access	0	28,293,118	0
330	Central Office Equip-Trans	0	0	0
331	Subscriber Lines	0	0	0
332	Exchange Circuit	0	0	0
333	Interexchange Circuit	0	0	0
334	Host Remote	0	0	0
340	Cable & Wire	0	0	0
341	Subscriber Lines	0	0	0
342	Exchange	0	0	0
343	Interexchange	0	0	0
344	Host Remote	0	0	0
350	Info Orig/Term Equipment	0	0	0
360	Amortizable Assets	0	1,190,039	0
370	Total Plant In Service	0	36,170,229	0
	Adjustments to TPIS			
380	Depr / Amor Reserve	0	27,572,924	0
390	Accum Deferred Income Tax	0	2,072,405	0
400	Other Rate Base Adjust.	0	1,010,060	0
	Return Data			
410	Average Rate Base	0	7,534,960	0
420	Return	0	772,231	0
430	Rate of Return	0.00%	10.25%	0.00%

PUBLIC VERSION

AUREON_01314

Rate-of Return TRP
Cost Analysis Summary
Historical, Calendar Year 2009

		Total Company (A)	Part 64 Adjustments (B)	Other Adjustments (C)	Subject to Separations (D)	Total Interstate (E)	Billing & Collection (F)
	Revenues						
100	Network Access	n/a	n/a	n/a	n/a	n/a	n/a
110	Uncollectibles	n/a	n/a	n/a	n/a	n/a	n/a
120	Common Line Support	n/a	n/a	n/a	n/a	n/a	n/a
130	Long Term	n/a	n/a	n/a	n/a	n/a	n/a
140	Transitional	n/a	n/a	n/a	n/a	n/a	n/a
150	Miscellaneous	n/a	n/a	n/a	n/a	n/a	n/a
160	Net Revenues	n/a	n/a	n/a	n/a	n/a	n/a
	Expenses						
170	Plant Specific	n/a	n/a	n/a	n/a	15,652,556	0
171	Network Support	0	0	0	0	0	0
172	General Support	986,088	0	0	986,088	789,423	0
173	Central Office	1,067,510	0	0	1,067,510	854,607	0
174	Operator Systems	0	0	0	0	0	0
175	COE Switching	1,067,510	0	0	1,067,510	854,607	0
176	COE Transmission	0	0	0	0	0	0
177	IOT	0	0	0	0	0	0
178	Cable & Wire Facilities	17,882,228	0	0	17,882,228	14,008,526	0
180	Plant Non-Sp. Less Dep/Amor	n/a	n/a	n/a	n/a	972,824	0
190	Depreciation / Amortization	3,371,420	0	0	3,371,420	2,699,026	0
200	Customer Operations	n/a	n/a	n/a	n/a	139,904	0
201	Marketing	0	0	0	0	0	0
202	Local Business Office	200,029	0	0	200,029	139,904	0
203	Revenue Accounting	0	0	0	0	0	0
204	Other Billing & Collection	0	0	0	0	0	0
210	Access	n/a	n/a	n/a	n/a	0	n/a
220	Corporate Operations	n/a	n/a	n/a	n/a	2,493,829	0
230	AFUDC	n/a	n/a	n/a	n/a	n/a	n/a
240	Other Exp. & Adjustments	n/a	n/a	n/a	n/a	3,534,107	0
250	Taxes Other than FIT	n/a	n/a	n/a	n/a	343,489	0
260	Total Exp and Other Taxes	n/a	n/a	n/a	n/a	25,835,735	0
	FIT Adjustments						
270	Adjustment for FIT	0	0	0	0	0	0
280	Amortized ITC	0	0	0	0	0	0
290	Federal Income Taxes	n/a	n/a	n/a	n/a	0	n/a
300	Total Expenses & Taxes	n/a	n/a	n/a	n/a	25,835,735	n/a
	Telephone Plant in Service						
310	General Support	6,035,246	0	0	6,035,246	4,831,581	0
320	Central Office Equip-Switch	33,746,711	0	0	33,746,711	27,016,294	0
321	Operator Systems	0	0	0	0	0	0
322	Tandem Switching	0	0	0	0	0	0
323	Local Switching Cat. 3	0	0	0	0	0	0
324	Equal Access	33,746,711	0	0	33,746,711	27,016,294	0
330	Central Office Equip-Trans	0	0	0	0	0	0
331	Subscriber Lines	0	0	0	0	0	0
332	Exchange Circuit	0	0	0	0	0	0
333	Interexchange Circuit	0	0	0	0	0	0
334	Host Remote	0	0	0	0	0	0
340	Cable & Wire	0	0	0	0	0	0
341	Subscriber Lines	0	0	0	0	0	0
342	Exchange	0	0	0	0	0	0
343	Interexchange	0	0	0	0	0	0
344	Host Remote	0	0	0	0	0	0
350	Info Orig/Term Equipment	0	0	0	0	0	0
360	Amortizable Assets	1,300,186	0	0	1,300,186	1,040,877	0
370	Total Plant In Service	41,082,143	0	0	41,082,143	32,888,752	0
	Adjustments to TPIS						
380	Depr / Amor Reserve	29,207,811	0	0	29,207,811	23,382,628	0
390	Accum Deferred Income Tax	2,531,813	0	0	2,531,813	2,026,871	0
400	Other Rate Base Adjust.	n/a	n/a	n/a	n/a	912,096	0
	Return Data						
410	Average Rate Base	n/a	n/a	n/a	n/a	8,391,349	n/a
420	Return	n/a	n/a	n/a	n/a	n/a	n/a
430	Rate of Return	n/a	n/a	n/a	n/a	n/a	n/a

PUBLIC VERSION

AUREON_01315

COS-1(
Filing Da 6/16/2010
Filing Entity: Iowa Network Access Division

COSA: INIAAN10

		Interstate Inter-exchange (G)	ROR Regulated I/S Access (H)	Pay Phone (I)	Inside Wire (J)	BFP (K)	Total Common Line (L)
	Revenues						
100	Network Access	n/a	24,424,831	0	0	0	0
110	Uncollectibles	n/a	0	0	0	0	0
120	Common Line Support	n/a	0	0	0	0	0
130	Long Term	n/a	0	0	0	0	0
140	Transitional	n/a	0	0	0	0	0
150	Miscellaneous	n/a	40,264	0	0	0	0
160	Net Revenues	n/a	24,465,095	0	0	0	0
	Expenses						
170	Plant Specific	0	15,652,556	0	0	0	0
171	Network Support	0	0	0	0	0	0
172	General Support	0	789,423	0	0	0	0
173	Central Office	0	854,607	0	0	0	0
174	Operator Systems	0	0	0	0	0	0
175	COE Switching	0	854,607	0	0	0	0
176	COE Transmission	0	0	0	0	0	0
177	IOT	0	0	0	0	0	0
178	Cable & Wire Facilities	0	14,008,526	0	0	0	0
180	Plant Non-Sp. Less Dep/Amor	0	972,824	0	0	0	0
190	Depreciation / Amortization	0	2,699,026	0	0	0	0
200	Customer Operations	0	139,904	0	0	0	0
201	Marketing	0	0	0	0	0	0
202	Local Business Office	0	139,904	0	0	0	0
203	Revenue Accounting	0	0	0	0	0	0
204	Other Billing & Collection	0	0	0	0	0	0
210	Access	0	n/a	n/a	n/a	n/a	n/a
220	Corporate Operations	0	2,493,829	0	0	0	0
230	AFUDC	n/a	0	0	0	0	0
240	Other Exp. & Adjustments	0	3,534,107	0	0	0	0
250	Taxes Other than FIT	0	343,489	0	0	0	0
260	Total Exp and Other Taxes	0	25,835,735	0	0	0	0
	FIT Adjustments						
270	Adjustment for FIT	0	0	0	0	0	0
280	Amortized ITC	0	0	0	0	0	0
290	Federal Income Taxes	n/a	(466,018)	0	0	0	0
300	Total Expenses & Taxes	n/a	25,369,717	0	0	0	0
	Telephone Plant in Service						
310	General Support	0	4,831,581	0	0	0	0
320	Central Office Equip-Switch	0	27,016,294	0	0	0	0
321	Operator Systems	0	0	0	0	0	0
322	Tandem Switching	0	0	0	0	0	0
323	Local Switching Cat. 3	0	0	0	0	0	0
324	Equal Access	0	27,016,294	0	0	0	0
330	Central Office Equip-Trans	0	0	0	0	0	0
331	Subscriber Lines	0	0	0	0	0	0
332	Exchange Circuit	0	0	0	0	0	0
333	Interexchange Circuit	0	0	0	0	0	0
334	Host Remote	0	0	0	0	0	0
340	Cable & Wire	0	0	0	0	0	0
341	Subscriber Lines	0	0	0	0	0	0
342	Exchange	0	0	0	0	0	0
343	Interexchange	0	0	0	0	0	0
344	Host Remote	0	0	0	0	0	0
350	Info Orig/Term Equipment	0	0	0	0	0	0
360	Amortizable Assets	0	1,040,877	0	0	0	0
370	Total Plant In Service	0	32,888,752	0	0	0	0
	Adjustments to TPIS						
380	Depr / Amor Reserve	0	23,382,628	0	0	0	0
390	Accum Deferred Income Tax	0	2,026,871	0	0	0	0
400	Other Rate Base Adjust.	0	912,096	0	0	0	0
	Return Data						
410	Average Rate Base	n/a	8,391,349	0	0	0	0
420	Return	n/a	(904,622)	0	0	0	0
430	Rate of Return	0.00%	-10.78%	0.00%	0.00%	0.00%	0.00%

PUBLIC VERSION

AUREON_01316

		Local Switching (M)	Equal Access (N)	SS7 (O)	Information (P)	Tandem Switching (Q)	Local Transport (R)
	Revenues						
100	Network Access	0	0	0	0	0	24,424,831
110	Uncollectibles	0	0	0	0	0	0
120	Common Line Support	0	n/a	n/a	n/a	n/a	n/a
130	Long Term	0	n/a	n/a	n/a	n/a	n/a
140	Transitional	0	n/a	n/a	n/a	n/a	n/a
150	Miscellaneous	0	0	0	0	0	40,264
160	Net Revenues	0	0	0	0	0	24,465,095
	Expenses						
170	Plant Specific	0	0	0	0	0	15,652,556
171	Network Support	0	0	0	0	0	0
172	General Support	0	0	0	0	0	789,423
173	Central Office	0	0	0	0	0	854,607
174	Operator Systems	0	0	0	0	0	0
175	COE Switching	0	0	0	0	0	854,607
176	COE Transmission	0	0	0	0	0	0
177	IOT	0	0	0	0	0	0
178	Cable & Wire Facilities	0	0	0	0	0	14,008,526
180	Plant Non-Sp. Less Dep/Amor	0	0	0	0	0	972,824
190	Depreciation / Amortization	0	0	0	0	0	2,699,026
200	Customer Operations	0	0	0	0	0	139,904
201	Marketing	0	0	0	0	0	0
202	Local Business Office	0	0	0	0	0	139,904
203	Revenue Accounting	0	0	0	0	0	0
204	Other Billing & Collection	0	0	0	0	0	0
210	Access	n/a	n/a	n/a	n/a	n/a	n/a
220	Corporate Operations	0	0	0	0	0	2,493,829
230	AFUDC	0	0	0	0	0	0
240	Other Exp. & Adjustments	0	0	0	0	0	3,534,107
250	Taxes Other than FIT	0	0	0	0	0	343,489
260	Total Exp and Other Taxes	0	0	0	0	0	25,835,735
	FIT Adjustments						
270	Adjustment for FIT	0	0	0	0	0	0
280	Amortized ITC	0	0	0	0	0	0
290	Federal Income Taxes	0	0	0	0	0	(466,018)
300	Total Expenses & Taxes	0	0	0	0	0	25,369,717
	Telephone Plant in Service						
310	General Support	0	0	0	0	0	4,831,581
320	Central Office Equip-Switch	0	0	0	0	0	27,016,294
321	Operator Systems	0	0	0	0	0	0
322	Tandem Switching	0	0	0	0	0	0
323	Local Switching Cat. 3	0	0	0	0	0	0
324	Equal Access	0	0	0	0	0	27,016,294
330	Central Office Equip-Trans	0	0	0	0	0	0
331	Subscriber Lines	0	0	0	0	0	0
332	Exchange Circuit	0	0	0	0	0	0
333	Interexchange Circuit	0	0	0	0	0	0
334	Host Remote	0	0	0	0	0	0
340	Cable & Wire	0	0	0	0	0	0
341	Subscriber Lines	0	0	0	0	0	0
342	Exchange	0	0	0	0	0	0
343	Interexchange	0	0	0	0	0	0
344	Host Remote	0	0	0	0	0	0
350	Info Orig/Term Equipment	0	0	0	0	0	0
360	Amortizable Assets	0	0	0	0	0	1,040,877
370	Total Plant In Service	0	0	0	0	0	32,888,752
	Adjustments to TPIS						
380	Depr / Amor Reserve	0	0	0	0	0	23,382,628
390	Accum Deferred Income Tax	0	0	0	0	0	2,026,871
400	Other Rate Base Adjust.	0	0	0	0	0	912,096
	Return Data						
410	Average Rate Base	0	0	0	0	0	8,391,349
420	Return	0	0	0	0	0	(904,622)
430	Rate of Return	0.00%	0.00%	0.00%	0.00%	0.00%	-10.78%

PUBLIC VERSION

		Host Remote (S)	Total Switched Traffic Sensitive (T)	Special Access (U)
	Revenues			
100	Network Access	0	24,424,831	0
110	Uncollectibles	0	0	0
120	Common Line Support	n/a	n/a	n/a
130	Long Term	n/a	n/a	n/a
140	Transitional	n/a	n/a	n/a
150	Miscellaneous	0	40,264	0
160	Net Revenues	0	24,465,095	0
	Expenses			
170	Plant Specific	0	15,652,556	0
171	Network Support	0	0	0
172	General Support	0	789,423	0
173	Central Office	0	854,607	0
174	Operator Systems	0	0	0
175	COE Switching	0	854,607	0
176	COE Transmission	0	0	0
177	IOT	0	0	0
178	Cable & Wire Facilities	0	14,008,526	0
180	Plant Non-Sp. Less Dep/Amor	0	972,824	0
190	Depreciation / Amortization	0	2,699,026	0
200	Customer Operations	0	139,904	0
201	Marketing	0	0	0
202	Local Business Office	0	139,904	0
203	Revenue Accounting	0	0	0
204	Other Billing & Collection	0	0	0
210	Access	n/a	n/a	n/a
220	Corporate Operations	0	2,493,829	0
230	AFUDC	0	0	0
240	Other Exp. & Adjustments	0	3,534,107	0
250	Taxes Other than FIT	0	343,489	0
260	Total Exp and Other Taxes	0	25,835,735	0
	FIT Adjustments			
270	Adjustment for FIT	0	0	0
280	Amortized ITC	0	0	0
290	Federal Income Taxes	0	(466,018)	0
300	Total Expenses & Taxes	0	25,369,717	0
	Telephone Plant in Service			
310	General Support	0	4,831,581	0
320	Central Office Equip-Switch	0	27,016,294	0
321	Operator Systems	0	0	0
322	Tandem Switching	0	0	0
323	Local Switching Cat. 3	0	0	0
324	Equal Access	0	27,016,294	0
330	Central Office Equip-Trans	0	0	0
331	Subscriber Lines	0	0	0
332	Exchange Circuit	0	0	0
333	Interexchange Circuit	0	0	0
334	Host Remote	0	0	0
340	Cable & Wire	0	0	0
341	Subscriber Lines	0	0	0
342	Exchange	0	0	0
343	Interexchange	0	0	0
344	Host Remote	0	0	0
350	Info Orig/Term Equipment	0	0	0
360	Amortizable Assets	0	1,040,877	0
370	Total Plant In Service	0	32,888,752	0
	Adjustments to TPIS			
380	Depr / Amor Reserve	0	23,382,628	0
390	Accum Deferred Income Tax	0	2,026,871	0
400	Other Rate Base Adjust.	0	912,096	0
	Return Data			
410	Average Rate Base	0	8,391,349	0
420	Return	0	(904,622)	0
430	Rate of Return	0.00%	-10.78%	0.00%

PUBLIC VERSION

COS-
Filing Date: 6/16/2010
Filing Entity: Iowa Network Access Division

Rate-of-Return TRP
7/10 - 6/11
Versus 2009 Actual

COSA: INIAAN10

		Common Line (A)	Traffic Sensitive Switched (B)	Traffic Sensitive Special (C)	Other Interstate (D)	Total Interstate (E)	Total Co. Subject to Separations (F)
Forecast, 7/10 - 6/11							
	Revenue Requirement						
100	Depreciation/Amortization	0	3,504,047	0	0	3,504,047	4,211,191
105	Expense Less Dep & Amor	0	23,536,753	0	0	27,040,800	n/a
110	Taxes Less FIT	0	346,313	0	0	n/a	n/a
115	Return	0	772,231	0	n/a	n/a	n/a
120	FIT	0	397,816	0	n/a	n/a	n/a
125	Uncol., IDC & Other Adj.	0	0	0	n/a	n/a	n/a
130	Revenue Requirement	0	28,557,160	0	n/a	n/a	n/a
135	Access Service Revenue	0	28,557,160	0	n/a	n/a	n/a
	Rate Base						
140	Telephone Plant in Service	0	36,170,229	0	0	36,170,229	43,469,664
145	Rate Base Adjustments	0	1,010,060	0	0	1,010,060	n/a
150	Depreciation Reserves	0	27,572,924	0	0	27,572,924	33,137,357
155	Accum Deferred Income Tax	0	2,072,405	0	0	2,072,405	2,490,632
160	Average Rate Base	0	7,534,960	0	0	7,534,960	n/a
Actual, 1/09- 12/09							
	Revenue Requirement						
200	Depreciation/Amortization	0	2,699,026	0	0	2,699,026	3,371,420
205	Expense Less Dep & Amor	0	22,793,220	0	0	22,793,220	n/a
210	Taxes Less FIT	0	343,489	0	0	n/a	n/a
215	Return	0	(904,622)	0	n/a	n/a	n/a
220	FIT	0	(466,018)	0	n/a	n/a	n/a
225	Uncol., IDC & Other Adj.	0	0	0	n/a	n/a	n/a
230	Revenue Requirement	0	24,465,095	0	n/a	n/a	n/a
235	Access Service Revenue	0	24,465,095	0	n/a	n/a	n/a
	Rate Base						
240	Telephone Plant in Service	0	32,888,752	0	0	32,888,752	41,082,143
245	Rate Base Adjustments	0	912,096	0	0	912,096	n/a
250	Depreciation Reserves	0	23,382,628	0	0	23,382,628	29,207,811
255	Accum Deferred Income Tax	0	2,026,871	0	0	2,026,871	2,531,813
260	Average Rate Base	0	8,391,349	0	0	8,391,349	n/a

PUBLIC VERSION

COS-1
Filing Date: 6/16/2010
Filing Entity: Iowa Network Access Division

Rate-of-Return TRP
7/10 - 6/11
Versus 2009 Actual

COSA: INIAAN10

		Common Line (A)	Traffic Sensitive Switched (B)	Traffic Sensitive Special (C)	Other Interstate (D)	Total Interstate (E)	Total Co. Subject to Separations (F)
Forecast, 7/08 - 6/09							
	Revenue Requirement						
100	Depreciation/Amortization	0	2,426,854	0	0	2,426,854	3,432,453
105	Expense Less Dep & Amor	0	15,463,291	0	0	15,463,291	n/a
110	Taxes Less FIT	0	250,281	0	0	n/a	n/a
115	Return	0	745,139	0	0	n/a	n/a
120	FIT	0	372,660	0	0	n/a	n/a
125	Uncol., IDC & Other Adj.	0	0	0	0	n/a	n/a
130	Revenue Requirement	0	19,258,225	0	0	n/a	n/a
135	Access Service Revenue	0	19,258,225	0	0	n/a	n/a
	Rate Base						
140	Telephone Plant in Service	0	27,331,327	0	0	27,331,327	38,656,421
145	Rate Base Adjustments	0	702,089	0	0	702,089	n/a
150	Depreciation Reserves	0	19,091,190	0	0	19,091,190	27,001,874
155	Accum Deferred Income Tax	0	2,249,468	0	0	2,249,468	3,181,564
160	Average Rate Base	0	6,692,758	0	0	6,692,758	n/a
Actual, 1/08 - 12/08							
	Revenue Requirement						
200	Depreciation/Amortization	0	2,128,253	0	0	2,128,253	3,303,218
205	Expense Less Dep & Amor	0	15,973,746	0	0	15,973,746	n/a
210	Taxes Less FIT	0	237,195	0	0	237,195	n/a
215	Return	0	(397,772)	0	0	(397,772)	n/a
220	FIT	0	(82,722)	0	0	(82,722)	n/a
225	Uncol., IDC & Other Adj.	0	0	0	0	0	n/a
230	Revenue Requirement	0	17,858,700	0	0	17,858,700	n/a
235	Access Service Revenue	0	17,858,700	0	0	n/a	n/a
	Rate Base						
240	Telephone Plant in Service	0	25,949,646	0	0	25,949,646	40,275,906
245	Rate Base Adjustments	0	822,431	0	0	822,431	n/a
250	Depreciation Reserves	0	17,944,335	0	0	17,944,335	27,851,030
255	Accum Deferred Income Tax	0	1,960,297	0	0	1,960,297	3,042,537
260	Average Rate Base	0	6,867,445	0	0	6,867,445	n/a

PUBLIC VERSION

COS-
Filing Date: 6/16/2010
Filing Entity: Iowa Network Access Division

Rate-of-Return TRP
7/10 - 6/11
Versus 2009 Actual

COSA: INIAAN10

		Common Line (A)	Traffic Sensitive Switched (B)	Traffic Sensitive Special (C)	Other Interstate (D)	Total Interstate (E)	Total Co. Subject to Separations (F)
Forecast, 7/07 - 6/08							
	Revenue Requirement						
100	Depreciation/Amortization	0	1,868,103	0	0	0	3,483,427
105	Expense Less Dep & Amor	0	12,981,231	0	0	0	n/a
110	Taxes Less FIT	0	197,556	0	0	n/a	n/a
115	Return	0	472,580	0	0	n/a	n/a
120	FIT	0	203,862	0	0	n/a	n/a
125	Uncol., IDC & Other Adj.	0	106,156	0	0	n/a	n/a
130	Revenue Requirement	0	15,829,488	0	0	n/a	n/a
135	Access Service Revenue	0	15,829,488	0	0	n/a	n/a
	Rate Base						
140	Telephone Plant in Service	0	20,692,613	0	0	20,692,613	38,585,253
145	Rate Base Adjustments	0	627,370	0	0	627,370	n/a
150	Depreciation Reserves	0	13,498,865	0	0	13,498,865	0
155	Accum Deferred Income Tax	0	1,838,560	0	0	1,838,560	0
160	Average Rate Base	0	5,982,558	0	0	5,982,558	n/a
Actual, 1/07 - 12/07							
	Revenue Requirement						
200	Depreciation/Amortization	0	1,670,562	0	0	1,670,562	3,242,907
205	Expense Less Dep & Amor	0	14,049,838	0	0	14,049,838	n/a
210	Taxes Less FIT	0	82,527	0	0	82,527	n/a
215	Return	0	(320,654)	0	0	(320,654)	n/a
220	FIT	0	(214,193)	0	0	(214,193)	n/a
225	Uncol., IDC & Other Adj.	0	0	0	0	0	n/a
230	Revenue Requirement	0	15,268,080	0	0	15,268,080	n/a
235	Access Service Revenue	0	15,268,080	0	n/a	n/a	n/a
	Rate Base						
240	Telephone Plant in Service	0	19,721,492	0	0	19,721,492	38,967,059
245	Rate Base Adjustments	0	519,616	0	0	519,616	n/a
250	Depreciation Reserves	0	12,873,344	0	0	12,873,344	0
255	Accum Deferred Income Tax	0	1,748,227	0	0	1,748,227	0
260	Average Rate Base	0	5,619,537	0	0	5,619,537	n/a

PUBLIC VERSION

AUREON_01321

MAG-1
Filing Date: 6/16/2010
Filing Entity: Iowa Network Access Division

Rate-of Return TRP
MAG Adjustments
Test Year, 7/10 - 6/11

COSA: INIAAN10 INIAAN10

Access Element	Interstate Revenue Requirement Prior to Adjustments (A) Note 1	Local Switching Support (B) Note 2	Sub-Total (C) Cols. A-B	Line Port Transfer (D) Note 3	Universal Service Fund Contribution (E) Note 4	Frozen TIC Revenue (F) Note 5	Interstate Revenue Requirement Subject to TIC Re-allocation (G) Cols. C+D+E+F	Frozen TIC Re-allocation (G) Note 6	Interstate Revenue Requirement Subject to Rate Making
Carrier Common Line	$0		$0	$0	$0		$0	$0	$0
Local Switching	$0	$0	$0	$0			$0	$0	$0
Information	$0		$0				$0	$0	$0
Transport	$28,516,102		$28,516,102			$0	$28,516,102	$0	$28,516,102
Special Access	$0		$0				$0	$0	$0
Total	**$28,516,102**	**$0**	**$28,516,102**	**$0**	**$0**	**$0**	**$28,516,102**	**$0**	**$28,516,102**

Note 1: Source of Revenue Requirements Column (A)
Carrier Common Line **TRP COS-1(P) Line 100, Column L**
Local Switching **TRP COS-1(P) Line 100, Column M**
Information **TRP COS-1(P) Line 100, Column P**
Transport **TRP COS-1(P) Line 100, Column Q,R,S**
Special Access **TRP COS-1(P) Line 100, Column U**

Factor Used for Line Port Adjustment: 0.0000%

Note 2: Calculated using USAC Algorithm for Test Period
Note 3: Column C, Local Switching * Port Adjustment Factor
Note 4: Projected Amount per Account 6540
Note 5: From TRP Form MAG-2
Note 6: Distributed on Column G Totals

MAG-2
Filing Date: 6/16/2010
Filing Entity: Iowa Network Access Division

Rate-of Return TRP
TIC Revenues
Test Year, 7/10 - 6/11

COSA: INIAAN10 INIAAN10

DEVELOPMENT FROZEN TIC REVENUE JULY 00 TO JUNE 01

Month	Transport Interconnection Charge Minutes Billed	Rate in Effect	Calculated Revenues
Jul-00	0	0.000000	$0
Aug-00	0	0.000000	$0
Sep-00	0	0.000000	$0
Oct-00	0	0.000000	$0
Nov-00	0	0.000000	$0
Dec-00	0	0.000000	$0
Jan-01	0	0.000000	$0
Feb-01	0	0.000000	$0
Mar-01	0	0.000000	$0
Apr-01	0	0.000000	$0
May-01	0	0.000000	$0
Jun-01	0	0.000000	$0

Total Frozen TIC Revenues **$0**
(Development based on FCC Order 01-304, Paragraph 103)

Or - Override (No Greater than Above): **$0**
(Actual TIC Revenue Used in December 17, 2001 Filing should be listed here)

Override = Actual TIC Revenues from Last Filing
(Development based on FCC Order 01-304, Paragraph 103)

Actual TIC Revenue Requirement from Filing Prior to MAG Filing in December 2001 **$0**

	Common Line	Minute or Message Rate (A)	Minute Miles Rate (B)	Line or Trunk Rate (C)	Minute or Message Demand (D)	Minute Miles Demand (E)	Line or Trunk Demand (F)	Access Revenue (G)	Revenue Requirement (H)
100	Multi-line Business EUCL	n/a	n/a	0.00	n/a	n/a	0	0	n/a
110	Single Line Business EUCL	n/a	n/a	0.00	n/a	n/a	0	0	n/a
120	Residential EUCL	n/a	n/a	0.00	n/a	n/a	0	0	n/a
130	Special Access Surcharge	n/a	n/a	0.00	n/a	n/a	12	0	n/a
140	Terminating CCL Premium	0.000000	n/a	n/a	0	n/a	n/a	0	n/a
150	Terminating CCL Non-Prem.	0.000000	n/a	n/a	0	n/a	n/a	0	n/a
160	Originating CCL Premium	0.000000	n/a	n/a	0	n/a	n/a	0	n/a
170	Originating CCL Non-Prem.	0.000000	n/a	n/a	0	n/a	n/a	0	n/a
180	Common Line - - Total	n/a	n/a	n/a	n/a	n/a	n/a	0	0
	Information	----	----	----	----	----	----	----	----
190	Directory Assistance	0.000000	n/a	n/a	0	n/a	n/a	0	n/a
200	White Page Surcharge Prem.	0.000000	n/a	n/a	0	n/a	n/a	0	n/a
210	White Pg. Surcharge Non-Prem.	0.000000	n/a	n/a	0	n/a	n/a	0	n/a
220	Other Information	n/a	n/a	n/a	n/a	n/a	n/a	n/a	n/a
230	Information - - Total	n/a	n/a	n/a	n/a	n/a	n/a	n/a	0
	Local Switching	----	----	----	----	----	----	----	----
240	Premium	0.000000	n/a	n/a	0	n/a	n/a	0	n/a
250	Non-Premium	0.000000	n/a	n/a	0	n/a	n/a	0	n/a
260	Equal Access	n/a	n/a	n/a	n/a	n/a	n/a	n/a	n/a
270	Switching - - Total	n/a	n/a	n/a	n/a	n/a	n/a	n/a	0
	Local Transport	----	----	----	----	----	----	----	----
280	Premium LT Term.	0.008190	n/a	n/a	3481819561	n/a	n/a	28,516,102	n/a
290	Non-Prem. LT Term	0.000000	n/a	n/a	0	n/a	n/a	0	n/a
300	Premium LT Facility	n/a	0.000000	n/a	n/a	0	n/a	0	n/a
310	Non-Prem. LT Facility	n/a	0.000000	n/a	n/a	0	n/a	0	n/a
320	Tandem Switching	0.000000	n/a	n/a	0	n/a	n/a	0	n/a
330	TST Termination	0.000000	n/a	n/a	0	n/a	n/a	0	n/a
340	TST Facility	n/a	0.000000	n/a	n/a	0	n/a	0	n/a
350	Premium Interconnection	0.000000	n/a	n/a	0	n/a	n/a	0	n/a
360	Non-Prem. Interconnection	0.000000	n/a	n/a	0	n/a	n/a	0	n/a
370	Installation NRC per Trunk	n/a	n/a	0.00	n/a	n/a	0	0	n/a

PUBLIC VERSION

	Local Transport (Cont.)	Termination Rate (A)	Circuit Rate (B)	Mileage Rate (C)	Termination Demand (D)	Circuit Demand (E)	Mileage Demand (F)	Access Revenue (G)	Revenue Requirement (H)
380	DS3 Entrance Facility	n/a	0	n/a	n/a	0	n/a	0	n/a
390	DS3 Direct Term.	0.00	n/a	n/a	0	n/a	n/a	0	n/a
400	DS3 Direct Facility	n/a	n/a	0.00	n/a	n/a	0	0	n/a
410	DS1 Entrance Facility	n/a	0	n/a	n/a	0	n/a	0	n/a
420	DS1 Direct Term.	0	n/a	n/a	0	n/a	n/a	0	n/a
430	DS1 Direct Facility	n/a	n/a	0.00	n/a	n/a	0	0	n/a
440	VG Entrance Facility	n/a	0.00	n/a	n/a	0	n/a	0	n/a
450	VG Direct Term.	0.00	n/a	n/a	0	n/a	n/a	0	n/a
460	VG Direct Facility	n/a	n/a	0.00	n/a	n/a	0	0	n/a
470	Other Transport	n/a	n/a	n/a	n/a	n/a	n/a	41,058	n/a
480	Local Transport - - Total	n/a	n/a	n/a	n/a	n/a	n/a	28,557,160	28,671,481
	Special - - Voice Grade	----	----	----	----	----	----	----	----
490	2-Wire Chan. Term.	n/a	0	n/a	n/a	0	n/a	0	n/a
500	4-Wire Chan. Term.	n/a	0	n/a	n/a	0	n/a	0	n/a
510	Channel Mileage Term.	0	n/a	n/a	0	n/a	n/a	0	n/a
520	Channel Mileage Facility	n/a	n/a	0.00	n/a	n/a	0	0	n/a
530	Non-Recurring	n/a	0	n/a	n/a	0	n/a	0	n/a
	Special - - High Capacity	----	----	----	----	----	----	----	----
540	High Capacity Chan. Term.	n/a	0	n/a	n/a	0	n/a	0	n/a
550	Channel Mileage Term.	0	n/a	n/a	0	n/a	n/a	0	n/a
560	Channel Mileage Facility	n/a	n/a	0.00	n/a	n/a	0	0	n/a
570	Non-Recurring	n/a	0	n/a	n/a	0	n/a	0	n/a
580	Special Access - - Total	n/a	n/a	n/a	n/a	n/a	n/a	0	0

Notes: A composite special access NRC should be used if the installation rates vary among the services. If the company does not file a particular rate, then the rate and demand = 0. Col. G equals Cols. (A x D) + (B x E) + (C x F).

PUBLIC VERSION

REV-2
Filing Date: 6/16/2010
Filing Entity: Iowa Network Access Division

Rate-of-Return TRP
Revenues Summary
Test Year, 7/10 - 6/11

COSA: INIAAN10

	Total Network Access (A)	Recurring without ICB (B)	Non-Recurring without ICB (C)	ICB (D)
100 Carrier Common Line	0	0	0	0
110 Special Access	0	0	0	0
120 Local Switching	0	0	0	0
130 Equal Access	0	0	0	0
140 Information	0	0	0	0
150 Local Transport	28,557,160	28,516,102	41,058	0
160 Total TS - Switched	28,557,160	28,516,102	41,058	0

Notes : Col. A = Cols. B + C + D. If a particular category is inapplicable, then that category equals O.

PUBLIC VERSION

RTE-1
Filing Date: 6/16/2010
Filing Entity: Iowa Network Access Division

COSA: INIAAN10

Rate-of-Return TRP
Percent Change in
Historical Rate Levels

		7/1/2009 Rate (A)	Current Effective Rate (B)	Proposed 7/1/2010 Rate (C)	% Change 7/1/2009 7/1/2010 (D)	% Change Current 7/1/2010 (E)
	Switched Access					
100	Premium CCL Term. ($/MOU)	0.00000000	0.00000000	0.00000000	0.00%	0.00%
		---	---	---	---	---
110	N.P. CCL Term. ($/MOU)	0.00000000	0.00000000	0.00000000	0.00%	0.00%
		---	---	---	---	---
120	Premium Switching ($/MOU)	0.00000000	0.00000000	0.00000000	0.00%	0.00%
		---	---	---	---	---
130	N.P. Switching ($/MOU)	0.00000000	0.00000000	0.00000000	0.00%	0.00%
		---	---	---	---	---
140	Equal Access	0.00000000	0.00000000	0.00000000	0.00%	0.00%
		---	---	---	---	---
	End User Common Line	---	---	---	---	---
150	Multi-line Business ($/Month)	0	0.00	0.00	0.00%	0.00%
		---	---	---	---	---
160	Residential & Single Line Bus.	0	0.00	0.00	0.00%	0.00%

PUBLIC VERSION

RTE-1
Filing Date: 6/16/2010
Filing Entity: Iowa Network Access Division

COSA: INIAAN10

Rate-of-Return TRP
Percent Change in
Historical Rate Levels

Local Transport Rates	7/1/2009 Rate (A)	Current Effective Rate (B)	Proposed 7/1/2010 Rate (C)	% Change 7/1/2009 7/1/2010 (D)	% Change Current 7/1/2010 (E)
170 Prem. LT ($/MOU, Avg. Mileage)	0.00819000	0.00819000	0.00819000	0.00%	0.00%
	---	---	---	---	---
180 N.P. LT ($/MOU, Avg. Mileage)	0.00000000	0.00000000	0.00000000	0.00%	0.00%
	---	---	---	---	---
190 DS1 Entr. Facility ($/Circuit)	0	0.00	0.00	0.00%	0.00%
	---	---	---	---	---
200 DS1 Direct Trunk ($/Circuit)	0	0.00	0.00	0.00%	0.00%
	---	---	---	---	---
210 Tdm Sw. Transport (($/Circuit)	0	0.00	0.00	0.00%	0.00%
	---	---	---	---	---
220 Tdm. Switching ($/Tdm. MOU)	0.000000	0.000000	0.000000	0.00%	0.00%
	---	---	---	---	---
230 Prem. Interconnection ($/MOU)	0.000000	0.000000	0.000000	0.00%	0.00%
	---	---	---	---	---
240 N.P. Interconnection ($/MOU)	0.000000	0.000000	0.000000	0.00%	0.00%
	---	---	---	---	---
250 NRC ($/Tk. Or Tks. Activated)	0.00	0.00	0.00	0.00%	0.00%
	---	---	---	---	---
260 2-Wire VG ($/Cir., Avg. Mileage)	0.00	0.00	0.00	0.00%	0.00%
	---	---	---	---	---
270 4-Wire VG ($/Cir., Avg. Mileage)	0.00	0.00	0.00	0.00%	0.00%

Notes: If Lines 170 & 180 or any other entry is inapplicable, then that rate = 0.

PUBLIC VERSION

RTE-2
Filing Date: 6/16/2010
Filing Entity: Iowa Network Access Division

Rate-of-Return
Revenue Price-outs
Using 2009 Demand

COSA: INIAAN10

Switched Access	Revenue at 7/1/2009 Rates (A)	Revenue at Current Rate (B)	Change in Revenue, Cols. B-A (C)	Revenue at 7/1/2010 Rates (D)	Change in Revenue, Cols. D-B (E)
100 Multi-line Business	0	0	0	0	0
110 Residential & Single Line Bus.	0	0	0	0	0
120 Carrier Common Line	0	0	0	0	0
130 Special Access	0	0	0	0	0
140 Local Switching	0	0	0	0	0
150 Equal Access	0	0	0	0	0
160 Information	0	0	0	0	0
170 Local Transport	28,557,160	28,557,160	0	28,557,160	0

Notes: If company belongs to the NECA common line pool, then revenue = 0.

PUBLIC VERSION

RTE-3
Filing Date: 6/16/2010
Filing Entity: Iowa Network Access Division

Rate-of-Return TRP
COSA's for which Rates
are Averaged or Pooled

COSA: INIAAN10

COSA	Multi-line Business (A)	Residential & Single Line Business (B)	Carrier Common Line (C)
100			
110			
120			
130			
140			
150			
160			
170			
180			
190			
200			
210			
220			
230			

Notes: Companies should list all COSA's for which rates are averages or pooled.

PUBLIC VERSION

RTE-3
Filing Date: 6/16/2010
Filing Entity: Iowa Network /

Rate-of-Return TRP
COSA's for Which Rates
are Averaged or Pooled

COSA: INIAAN10

COSA	Local Switching (D)	Local Transport (E)	Information (F)	Equal Access (G)	Special Access (H)
100					
110					
120					
130					
140					
150					
160					
170					
180					
190					
200					
210					
220					
230					

Notes: Companies should list all COS/

PUBLIC VERSION

DMD-1
Filing Date: 6/16/2010
Filing Entity: Iowa Network Access Division

Rate-of-Return TRP
Common Line
Minutes-of-Use

COSA: INIAAN10

	Historical	Premium Originating (A)	Premium Terminating (B)	Premium Total (C)	Non-Premium Originating (D)	Non-Premium Terminating (E)	Non-Premium Total (F)
100	1st Qtr. 2006	0	0	0	0	0	0
110	2nd Qtr. 2006	0	0	0	0	0	0
120	3rd Qtr. 2006	0	0	0	0	0	0
130	4th Qtr. 2006	0	0	0	0	0	0
140	1st Qtr. 2007	0	0	0	0	0	0
150	2nd Qtr. 2007	0	0	0	0	0	0
160	3rd Qtr. 2007	0	0	0	0	0	0
170	4th Qtr. 2007	0	0	0	0	0	0
180	1st Qtr. 2008	0	0	0	0	0	0
190	2nd Qtr. 2008	0	0	0	0	0	0
200	3rd Qtr. 2008	0	0	0	0	0	0
210	4th Qtr. 2008	0	0	0	0	0	0
		---	---	---	---	---	---
220	Pycos Year, 1/09 - 12/09	0	0	0	0	0	0
		---	---	---	---	---	---
230	Test Year, 7/10 - 6/11	0	0	0	0	0	0

PUBLIC VERSION

DMD-1
Filing Date: 6/16/2010
Filing Entity: Iowa Network Access Division

Rate-of-Return TRP
Common Line
Minutes-of-Use

COSA: INIAAN10

Historical	Total Originating (A)	Total Terminating (B)	Grand Total (C)	Chargeable Originating (D)	Chargeable Terminating (E)
100 1st Qtr. 2006	0	0	0	0	0
110 2nd Qtr. 2006	0	0	0	0	0
120 3rd Qtr. 2006	0	0	0	0	0
130 4th Qtr. 2006	0	0	0	0	0
140 1st Qtr. 2007	0	0	0	0	0
150 2nd Qtr. 2007	0	0	0	0	0
160 3rd Qtr. 2007	0	0	0	0	0
170 4th Qtr. 2007	0	0	0	0	0
180 1st Qtr. 2008	0	0	0	0	0
190 2nd Qtr. 2008	0	0	0	0	0
200 3rd Qtr. 2008	0	0	0	0	0
210 4th Qtr. 2008	0	0	0	0	0
	---	---	---	---	---
220 Pycos Year, 1/09 - 12/09	0	0	0	0	0
	---	---	---	---	---
230 Test Year, 7/10 - 6/11	0	0	0	0	0

PUBLIC VERSION

DMD-1
Filing Date: 6/16/2010
Filing Entity: Iowa Network Access Division

Rate-of-Return TRP
Traffic Sensitive
Minutes-of-Use

COSA: INIAAN10
Page 3 of 3

Historical	Premium Local Switching (A)	Non-Premium Local Switching (B)	Total Local Switching (C)	Total Chargeable Switching (D)	Total Tandem Switching* (E)	Tandem Switching Transport ** (F)
100 1st Qtr. 2006	0	0	0	0	0	321,422,883
110 2nd Qtr. 2006	0	0	0	0	0	368,994,474
120 3rd Qtr. 2006	0	0	0	0	0	395,505,512
130 4th Qtr. 2006	0	0	0	0	0	484,440,714
140 1st Qtr. 2007	0	0	0	0	0	549,205,122
150 2nd Qtr. 2007	0	0	0	0	0	471,235,020
160 3rd Qtr. 2007	0	0	0	0	0	410,482,287
170 4th Qtr. 2007	0	0	0	0	0	413,802,728
180 1st Qtr. 2008	0	0	0	0	0	462,642,762
190 2nd Qtr. 2008	0	0	0	0	0	494,506,220
200 3rd Qtr. 2008	0	0	0	0	0	587,375,504
210 4th Qtr. 2008	0	0	0	0	0	626,529,936
	---	---	---	---	---	---
220 Pycos Year, 1/09 - 12/09	0	0	0	0	0	2,982,269,940
	---	---	---	---	---	---
230 Test Year, 7/10 - 6/11	0	0	0	0	0	3,481,819,561

Notes: Local switching MOU are the same as the billable units for the interconnection charge.
* Refers to the MOU switched at a company tandem, as discussed in Part 69. 11(f-g).
** Refers to the MOU carried over non-dedicated trunks; i.e., tandem switched transport or common trunks.

PUBLIC VERSION

DMD-2
Filing Date: 6/16/2010
Filing Entity: Iowa Network Access Division

Rate-of-Return TRP
Special Access
Demand

COSA: INIAAN10

	1/09 - 12/09 Channel Terminations (A)	1/09 - 12/09 Number of Circuits (B)	1/09 - 12/09 Interoffice Miles (C)	7/10 - 6/11 Channel Terminations (D)	7/10 - 6/11 Number of Circuits (E)	7/10 - 6/11 Interoffice Miles (F)
100 Metallic	0	0	0	0	0	0
110 Telegraph	0	0	0	0	0	0
120 VG less WATS	0	0	0	0	0	0
130 WATS	0	0	0	0	0	0
140 full-time Audio	0	0	0	0	0	0
150 High Capacity	0	0	0	0	0	0

PUBLIC VERSION

Rate-of-Return TRP
Common Line
Revenue and Demand

	1/09 - 12/09 Historical Revenue (A)	1/09 - 12/09 Historical MOU or Lines (B)	7/10 - 6/11 Test Year Revenue (C)	7/10 - 6/11 Test Year MOU or Lines (D)
100 End User Common Line, Total	0	0	0	0
110 Residential	0	0	0	0
120 Single Line Business	0	0	0	0
130 Multi-line Business	0	0	0	0
140 Special Access Surcharge	0	0	0	0
150 Carrier Common Line	0	0	0	0
160 Total Common Line Revenue	0	n/a	0	n/a

PUBLIC VERSION

DMD-4
Filing Date: 6/16/2010
Filing Entity: Iowa Network Access Division

Rate-of-Return TRP
Minutes-of-Use
Historical vs. Forecast

COSA: INIAAN10
Page 1 of 1

		Common Line MOU (A)	Traffic Sensitive MOU (B)
100 Test Year	7/10 - 6/11	0	3,481,819,561
110 Pycos Year,	1/09 - 12/09	0	2,982,269,940
		---	---
120 Test Year	7/09 - 6/10	0	2,970,603,151
130 Pycos Year,	1/08 - 12/08	0	2,171,054,422
		---	---
140 Test Year	7/08 - 6/09	0	2,346,089,248
150 Pycos Year,	1/07 - 12/07	0	1,844,725,157
		---	---
160 Test Year	7/07 - 6/08	0	1,849,414,135
170 Pycos Year,	1/06 - 12/06	0	1,570,363,583

Notes: Actual operating statistics should be reported for the PYCOS years.
These data should be consistent with those in Chart DMD-4 in previous TRPs.
If a forecast was not reported for any particular test year, then enter 0.

PUBLIC VERSION

DMD-5
Filing Date: 6/16/2010
Filing Entity: Iowa Network Access Division

Rate-of-Return TRP
Minutes-of-Use
Direct Trunked Transport

COSA: INIAAN10
Page 1 of 1

	1/09 - 12/09 VG (A)	1/09 - 12/09 DSI (B)	1/09 - 12/09 DS3 (C)	Test Year 7/10 - 6/11 VG (D)	Test Year 7/10 - 6/11 DS1 (E)	Test Year 7/10 - 6/11 DS3 (F)
100 Entrance Facility	0.00	0.00	0.00	0.00	0.00	0.00
110 Direct Trunked Transport	0.00	0.00	0.00	0.00	0.00	0.00

Notes: Demand should be annualized and reflect application of the percent interstate usage factor (PIU).

PUBLIC VERSION

ERN-1
Filing Date: 6/16/2010
Filing Entity: Iowa Network Access Division

COSA: INIAAN10
Page 1 of 1

Rate-of-Return TRP
Rate-of-Return
Summary

		2007/2008 FCC Monitoring Period (A)	2009 Calendar Year (B)	7/10 - 6/11 Test Year (C)
100	Interstate Access, Total	-5.75%	-10.78%	10.25%
110	Carrier Common Line	0.00%	0.00%	0.00%
120	Special Access	0.00%	0.00%	0.00%
130	Local Switching	0.00%	0.00%	0.00%
140	Information	0.00%	0.00%	0.00%
150	Local Transport	-5.75%	-10.78%	10.25%
160	Traffic Sensitive Switched, Total	-5.75%	-10.78%	10.25%

PUBLIC VERSION

Filing Entity: Iowa Network Access Division
Filing Date: 6/16/2010

Rate-of-Return TRP
Base Study Factor

COSA: INIAAN10

		Actual 2004 (A)	Actual 2005 (B)	Actual 2006 (C)	Actual 2007 (D)	Actual 2008 (E)	Prospective 2010 (F)
	Relative MOU's - Tandem Switching						
100	Interstate	-	-	-	-	-	-
110	Total Company	-	-	-	-	-	-
120	IS Factor	0.0000%	0.0000%	0.0000%	0.0000%	0.0000%	0.0000%
	Host/Remote MOU's						
130	Interstate	-	-	-	-	-	-
140	Total Company	-	-	-	-	-	-
150	IS Factor	0.0000%	0.0000%	0.0000%	0.0000%	0.0000%	0.0000%
	Host/Remote MOU Miles						
160	Interstate	-	-	-	-	-	-
170	Total Company	-	-	-	-	-	-
180	IS Factor	0.0000%	0.0000%	0.0000%	0.0000%	0.0000%	0.0000%
	Conversation Minutes						
190	Interstate	906,820,518	954,245,936	1,570,363,583	1,844,725,157	2,171,054,422	3,481,819,561
200	Total Company	2,189,105,519	2,528,561,529	3,690,091,126	3,769,513,569	3,511,079,888	4,325,674,539
210	IS Factor	41.4242%	37.7387%	42.5562%	48.9380%	61.8344%	80.4919%
	Conversation Minute Miles (000s)						
220	Interstate	119,778,486	128,384,484	223,742,058	237,595,577	252,814,009	142,332,174
230	Total Company	292,496,869	349,294,833	531,365,223	488,553,782	376,460,878	175,791,372
240	IS Factor	40.9503%	36.7553%	42.1070%	48.6324%	67.1555%	80.9665%

The above Base Study Factors apportion on the following investment:

	Part 32 Account	Part 36 Category
Relative MOU's-Tandem Switching	2210	COE Cat. 3
Host/Remote MOU's	2230	COE Cat. 4.3
Host/Remote MOU Miles	2410	C&WF Cat. 4
Conversation Minutes	2230	COE Cat. 4.23
Conversation Minutes Miles	2410	C&WF Cat. 3

PUBLIC VERSION

RORDEM-1
Filing Date: 6/16/2010
Filing Entity: Iowa Network Access Division

COSA: INIAAN10
Page 1 of 1

Rate-of-Return TRP
Verification of WDEM

Year	Interstate DEM MOU (A)	Intrastate DEM MOU (B)	Local DEM MOU (C)	Total DEM MOU (D)	Interstate MDEM Factor (E)	No. of Switched Access Lines (F)	Part 36.125(e) Historical Weighting (G)	Interstate WDEM Factor (H)
2002	-	-	-	-	0.0000%	-	0	0.0000%
2003	-	-	-	-	0.0000%	-	0	0.0000%
2004	-	-	-	-	0.0000%	-	0	0.0000%
2005	-	-	-	-	0.0000%	-	0	0.0000%
2006	-	-	-	-	0.0000%	-	0	0.0000%
2007	-	-	-	-	0.0000%	-	0	0.0000%
2008	-	-	-	-	0.0000%	-	0	0.0000%

PUBLIC VERSION

AUREON_01341

Exhibit 19

INS 2012 Tariff Filing
(filed June 26, 2012)

PUBLIC VERSION

VENABLE® LLP

575 SEVENTH STREET NW WASHINGTON, DC 20004
T 202.344.4000 F 202.344.8300 www.Venable.com

June 28, 2012

Marlene H. Dortch
Office of the Secretary
Federal Communications Commission
445 Twelfth Street, S.W.
Washington, D.C. 20554

Attention: Wireline Competition Bureau

Amended Transmittal No. 29

FRN: 0002-5807-10
Iowa Network Services, Inc.

FRN: 0011-5755-03
Venable LLP

Dear Ms. Dortch:

On June 26, 2012, Iowa Network Services filed its 2012 Annual Access Tariff pursuant to the procedures set forth in *July 3, 2012 Annual Access Charge Tariff Filings, Order*, DA 12-482 (rel. Mar. 28, 2012) (the "*Tariff Order*"), and included cost support required by *Material to be Filed in Support of 2012 Annual Access Tariff Filings*, DA 12-575 (rel. Apr. 19, 2012). The cost support materials included with that filing were in PDF format. INS now files this Amended Transmittal No. 29 to submit the cost support in Excel format. All other aspects of the original filing, including the effective date of the tariff, remain the same.

This submission is being made using the Commission's Electronic Tariff Filing System ("ETFS"). It is our understanding that no fee is required for this Amended Transmittal filing.

Should you have any questions concerning this matter, please contact James U. Troup at (202) 344-8066. Petitions or comments should be faxed to (202) 344-8300.

Sincerely,

James U. Troup

Counsel for Iowa Network Services, Inc.

Attachments

VENABLE® LLP

575 SEVENTH STREET NW WASHINGTON, DC 20004
T 202.344.4000 F 202.344.8300 www.Venable.com

Filed Pursuant to
§ 204(a)(3) of the
Communications Act
on 7 Days' Notice

June 26, 2012

Marlene H. Dortch
Office of the Secretary
Federal Communications Commission
445 Twelfth Street, S.W.
Washington, D.C. 20554

Attention: Wireline Competition Bureau

Transmittal No. 29

FRN: 0002-5807-10
Iowa Network Services, Inc.

FRN: 0011-5755-03
Venable LLP

Dear Ms. Dortch:

The accompanying 2012 Annual Access Tariff Filing of Iowa Network Services, Inc. ("INS"), effective July 3, 2012, is sent to you for filing in compliance with the requirements of the Communications Act of 1934, as amended. This tariff filing consists of the following Check Sheets:

Tariff F.C.C. No.	Check Sheet Revision No.
1	25th Revised Page 1
	10th Revised Page 1.1

This 2012 Annual Access Tariff Filing is filed in accordance with the procedures set forth in *July 3, 2012 Annual Access Charge Tariff Filings, Order*, DA 12-482 (rel. Mar. 28, 2012) (the "*Tariff Order*") and includes cost support required by *Material to be Filed in Support of 2012 Annual Access Tariff Filings*, DA 12-575 (rel. Apr. 19, 2012). Pursuant to the attached study for the test period ending June 30, 2013, INS is reducing its switched transport rate.

VENABLE® LLP

As required by the *Tariff Order*, INS is submitting its 2012 Annual Tariff Review Plan and associated tariff changes electronically, using the Commission's Electronic Tariff Filing System ("ETFS"). The statutory processing fee in the amount of $845.00 is being delivered via overnight mail to the Federal Communications Commission (Tariff Filings, P.O. Box 979091, St. Louis, MO 63197-9000) along with the original transmittal letter and FCC Form 159.

Acknowledgement and date of receipt of this filing is requested. A duplicate copy of this letter is provided for this purpose.

Should you have any questions concerning this matter, please contact James U. Troup at (202) 344-8066. Petitions or comments should be faxed to (202) 344-8300.

Sincerely,

James U. Troup

Counsel for
Iowa Network Services, Inc.

Attachments

IOWA NETWORK SERVICES, INC.

IOWA NETWORK ACCESS DIVISION

DESCRIPTION AND JUSTIFICATION

COST SUPPORT MATERIAL

TARIFF REVIEW PLAN

JULY 3, 2012 ANNUAL ACCESS CHARGE TARIFF FILING

JUNE 26, 2012

IOWA NETWORK ACCESS DIVISION

INTERSTATE ACCESS TARIFF FILING

PROSPECTIVE PERIOD
JULY 3, 2012 - JUNE 30, 2013

INDEX

Section	Description
	Transmittal Letter
1	Introduction, Overview and Rate Development
2	Development of Switched Transport Charge and Study Period Projected Access Minutes
3	Projected Revenue Requirement Summary - Total Interstate (Part 69)
4	Projected Part 36 Revenue Requirement Summary
5	Projected Part 64 Revenue Requirement Summary
6	Tariff Review Plan (TRP)

IOWA NETWORK ACCESS DIVISION

INTRODUCTION, OVERVIEW AND RATE DEVELOPMENT

INTRODUCTION

This filing supports revisions to Iowa Network Access Division Tariff F.C.C. No. 1 in accordance with the Federal Communications Commission's (FCC) Order, In the Matter of July 3, 2012 Annual Access Charge Tariff Filings, DA 12-482, WCB/Pricing File No. 12-07 (released March 28, 2012). This Order establishes procedures for the 2012 filing of annual access charge tariffs and Tariff Review Plans (TRPs) for incumbent local exchange carriers (ILECs) subject to price caps and those ILECs subject to Section 61.38 of the Commission's rules. The requirements for summary cost support material to support the annual access charge filings to be submitted on or before June 26, 2012 are presented in the Commission's Order, In the Matter of Material to be Filed in Support of 2012 Annual Access Tariff Filings, DA 12-575, WCB/Pricing File No. 12-08 (released April 19, 2012).

This 2012 Annual Access Charge Tariff Filing covers the scheduled effective period from July 3, 2012 through June 30, 2013. This documentation volume contains the introduction, overview, rate development narrative, access rate development and corresponding cost support material to be filed with the FCC on June 26, 2012.

OVERVIEW

Schedule A of Section 2 presents a summary of the proposed rate to be effective July 3, 2012. Iowa Network Access Division ("INAD") proposes to reduce its existing switched transport rate of $0.00819 per minute of use to a rate of $0.00623 effective July 3, 2012. The Company's proposed switched transport rate of $0.00623 per access minute is projected to generate switched transport revenues of $20,805,902. When combined with nonrecurring revenues of $23,148, total test period revenues are projected in the amount of $20,829,050 resulting in a return of 10.92% on interstate investments for the projected twelve-month period ending June 30, 2013.

For the year 2011, INAD's regulated revenue from interstate access services amounted to $31,419,869 which resulted in a return of 9.74% on its interstate investment. For the 2009/2010 monitoring period, INAD experienced a return of negative 2.00%. During this period, the FCC authorized a maximum rate of return for interstate access operations of 11.50% with a target of 11.25%.

Interstate access minutes grew at a rate of 4.18% during 2011 to 3,833,504,867 from 3,679,806,752 in 2010. During the year 2010, INAD recorded interstate traffic growth of 23.39% over the year 2009. For the year 2012, INAD began experiencing reductions in MOUs from both ILEC and call aggregator traffic[1] when compared with historical MOUs reflected during 2011. For the test period ending June 30, 2012, INAD projected interstate access minutes of 3,450,907,011 reflecting a decrease of 9.98% from the year 2011. For the test period ending June 30, 2013, INAD is projecting interstate access minutes of 3,339,631,164, representing a decrease of 3.22% from projected access minutes of 3,450,907,011 for the projected period ending June 30, 2012. The decrease in interstate traffic for the projected test period results primarily from continued reductions in interstate access minutes by independent local exchange carriers that originate or terminate calls over the INS network. LEC traffic is projected to decrease approximately 16.7% during this time frame while aggregator traffic is projected to increase 1.2%. In its 2012 annual access tariff filing, NECA has forecast a reduction in interstate switched access traffic of 11.9% for the 2012-2013 test period. As most of the local exchange carriers that originate or terminate traffic over the INS network are NECA members, INS' traffic volume will be impacted by the reduction in traffic that those local exchange carriers expect to deliver to INS' network.

Over the years, Iowa Network Services, Inc. ("INS") has implemented a state of the art fiber network throughout the state of Iowa that is being used to provide equal access services to interexchange carriers serving nearly all rural Independent Local Exchange Carriers (ILECs) in the state. This state of the art network provides full switching and transport redundancy for interexchange carriers serving rural Iowa. As this network ages, INS has plans to upgrade its fiber routes and electronics to bring newer technologies and increased capacity in areas where needed. Approximately $9.6 million has been expended since 2009 and an additional $11.3 million is planned for 2012.

During 2007, INAD began to experience an increase in its uncollectible revenues from an Interexchange Carrier ("IXC") as a result of billing disputes over the classification and quantification of interstate access minutes related to call aggregator traffic terminated by the IXC to ILEC locations in Iowa. The disputed traffic is being terminated by the IXC to ILEC locations in Iowa using the equal access network of INAD. During the year 2011, INAD recorded a provision for uncollectibles relating to the interstate billing for this traffic in the amount of $3,868,851. INAD continues to bill the IXC for all traffic terminated over its network and includes this disputed traffic in its minute of use and revenue projections for the twelve month period ending June 30, 2013. The interstate provision for uncollectibles related to this traffic is estimated to be $2,461,934 and is reflected in INAD's cost of operations for the projected period ending June 30, 2013.

INAD's proposed tariff rate of $0.00623 is targeted to generate a return of 10.92% on investment for the projected test period ended June 30, 2013. INAD's cost support material has

[1] The term call aggregator refers to businesses that generate high-volume traffic, such as conference call companies, chat line providers, and fax broadcasters.

been developed using procedures prescribed by the Federal Communications Commission as follows:

A) Financial reporting is in accordance with the Uniform Systems of Accounts and Financial Reporting Requirements of Class A and Class B Telephone Companies, CC Docket 78-196 (Part 32 Order) and all subsequent revisions to the rules adopted through the period June 15, 2012.

B) Jurisdictional allocation is in accordance with Federal Communications Commission's Rules adopted in CC Docket Nos. 78-72, 80-286, 86-297 and FCC Docket 87-134 released August 18, 1987 (Part 36 Order) and all subsequent revisions to the rules adopted through the period June 15, 2012.

C) Access rate development is performed in accordance with CC Docket No. 87-113 released August 18, 1987 (Part 69 Conformance Notice) and subsequent modifications including CC Docket No. 00-256, Second Report and Order and Notice of Proposed Rulemaking, 16 FCC Rcd 19613 (2001), ("Rate-of-Return Access Charge Reform Order".

The proposed access service tariff maintains the method of charging for interstate access by major rate element. INAD proposes a centralized equal access switched transport rate of $0.00623 and anticipates this rate will remain in effect through June 30, 2014.

RATE DEVELOPMENT

Development of cost support as contained in the tariff filing was accomplished as follows:

1) Projection of test period investment, revenue and expense was determined based on the best estimates of management using fixed, known and measurable amounts from INAD's 2012 and 2013 operating budgets. Anticipated changes in investments and reserves were reflected in conjunction with INAD's ongoing construction and modernization programs. Revenues were adjusted to reflect the projected decrease in access minutes during the test period from the year 2011.

2) Projection of the test period INAD revenue requirement was accomplished using FCC Part 64 cost allocation procedures applied to total company projected investment and expense amounts determined in (1) above. INAD's revenue requirement summary data is contained in Section 5 of the cost support material.

3) Projection of the test period interstate access revenue requirement was accomplished using Parts 36/69 separation procedures applied to projected total INAD investment and expense amounts determined in (2) above. INAD's interstate access revenue requirement was determined using a return on

investment of 11.25% which reflects the rate of return currently authorized by the FCC for interstate ratemaking purposes. The summary Part 36 and Part 69 revenue requirements are contained in Sections 3 and 4 of the cost support material.

4) Projected interstate access minutes for the period ending June 30, 2013 reflect a decrease of 12.88% from the historical period ending December 31, 2011. Interstate access minutes for the period ending June 30, 2013 are projected to be 3,339,631,164 compared to 3,450,907,011 for the projected period ending June 30, 2012 and 3,833,504,867 for the actual period ended December 31, 2011. Projected access minutes for the test period ending June 30, 2013 are presented on Schedule B following. The decrease in test period projected interstate access minutes from actual interstate access minutes for the year 2011 results primarily from anticipated decreases in independent local exchange carrier traffic, including call aggregator traffic, carried over the INS network that are being recovered through access charges billed to long distance companies. In its 2012 annual access tariff filing, NECA has forecast a reduction in interstate switched access traffic of 11.9% during the 2012-2013 test period. As most of the local exchange carriers that originate or terminate traffic over the INS network are NECA members, INS' traffic volume will be impacted by the reduction in traffic that those local exchange carriers expect to deliver to INS' network. INAD's projected change in access minutes for the test period ending June 30, 2013 appears to be consistent with changes being recognized by NECA and other telecommunication service providers in the industry during the time periods reflected above.

5) INAD's interstate access revenue requirement determined in (3) above for the projected period ending June 30, 2013 amounts to $20,839,116 and is presented in Section 3 of the cost support material. The interstate revenue requirement was reduced by the amount of projected interstate revenues from nonrecurring charges of $23,148 to arrive at the amount of $20,815,968 representing the target revenue requirement to be recovered from the recurring centralized equal access switched transport rate.

6) The allowable projected switched transport charge supported by the projected costs of INAD is determined by dividing the remaining interstate revenue requirement of $20,815,968 determined in (5) above by projected access minutes of 3,339,631,164 determined in (4) above resulting in a cost of $0.00623 per access minute. An analysis of the development of the allowable interstate switched transport rate is presented on Schedule A in Section 2. INAD proposes to reduce its existing interstate switched transport rate of $0.00819 to the rate of $0.00623 effective for access billings on July 3, 2012.

SUMMARY

The 2012 annual access tariff filing is supplemented by the enclosed cost support material. Schedule A reflects INAD's existing switched transport charge of $0.00819 compared with its supported rate of $0.00623. Through this filing, INAD proposes to reduce its existing switched transport charge of $0.00819 to the supported rate of $0.00623 based on the test period ending June 30, 2013. The proposed rate of $0.00623 will become effective for access billings on July 3, 2012. The proposed switched transport charge will produce revenues that will generate a rate of return on investment of 10.95 % for the test period ended June 30, 2013.

Included in the cost support material are schedules depicting projected investment and expense data, demand quantities, jurisdictional cost allocations and rate calculations for the twelve-month period ending June 30, 2013. Cost and revenue data for the historical period from January 1 through December 31, 2011 is contained in the Company's Tariff Review Plan (TRP) which has been filed under separate cover.

This filing is presented to comply with the Commission's Order, July 3, 2012 Annual Access Tariff Filings, DA 12-482, and Material to be Filed in Support of 2012 Annual Access Tariff Filings, DA 12-575, establishing the Tariff Review Plan (TRP) schedules to be filed in support of the annual access charge tariff filing. With this filing, INAD proposes to reduce its switched transport charge from the existing rate of $0.00819 to the proposed rate of $0.00623 effective July 3, 2012 through June 30, 2014.

SECTION 2

PUBLIC VERSION

IOWA NETWORK SERVICES, INC.
IOWA NETWORK ACCESS DIVISION
INTERSTATE ACCESS RATE DEVELOPMENT
TRANSMITTAL NO. 29
PROJECTED TEST PERIOD ENDED 6/30/2013

SECTION 2
SCHEDULE A

		SOURCE	CURRENT RATE	COST SUPPORT	DIFFERENCE
1	SWITCHED TRANSPORT RATE	(BELOW)	$0.00819	$0.00623	($0.00196)
2	STUDY PERIOD ACCESS MINUTES	SCHEDULE B	3,339,631,164	3,339,631,164	
3	STUDY PERIOD ACCESS REVENUE	LN 1*LN 2	$27,351,579	$20,805,902	($6,545,677)

	ACCESS RATE DEVELOPMENT	SOURCE	AMOUNT	
4	PROJECTED REVENUE REQUIREMENT	SECTION 4	$20,839,116	(1)
5	LESS: MISCELLANEOUS REVENUE	RECORDS	23,148	
7	ACCESS REVENUE REQUIREMENT	LN 4-LN 5	$20,815,968	
8	PROJECTED ACCESS MINUTES	SCHEDULE B	3,339,631,164	
9	PROJECTED ACCESS RATE PER MOU	LN 4/LN 5	$0.00623	

(1) - Includes bad debt expense of $2,461,934

PUBLIC VERSION

IOWA NETWORK SERVICES, INC.
IOWA NETWORK ACCESS DIVISION
EQUAL ACCESS MOU SUMMARY
TRANSMITTAL NO. 29
PROJECTED TEST PERIOD ENDED 6/30/2013

SECTION 2
SCHEDULE B

PRO FORMA ALL CARRIERS	DAYS	TOTAL INTERSTATE ORIGINATING MINUTES	TOTAL INTERSTATE TERMINATING MINUTES	TOTAL INTERSTATE REVENUES
7/1/2012 - 7/31/2012	31	24,214,739	302,129,446	$2,033,124.27
8/1/2012 - 8/31/2012	31	17,539,472	218,841,557	$1,472,653.82
9/1/2012 - 9/30/2012	30	20,306,220	253,362,519	$1,704,956.25
10/1/2012 - 10/31/2012	31	21,017,832	262,241,354	$1,764,704.73
11/1/2012 - 11/30/2012	30	20,365,862	254,106,675	$1,709,963.91
12/1/2012 - 12/31/2012	31	21,065,673	262,838,280	$1,768,721.63
1/1/2013 - 1/31/2013	31	21,083,691	263,063,094	$1,770,234.47
2/1/2013 - 2/28/2013	28	19,057,274	237,779,303	$1,600,091.88
3/1/2013 - 3/31/2013	31	21,111,467	263,409,657	$1,772,566.60
4/1/2013 - 4/30/2013	30	20,442,187	255,058,989	$1,716,372.33
5/1/2013 - 5/31/2013	31	21,134,176	263,692,999	$1,774,473.30
6/1/2013 - 6/30/2013	30	20,462,037	255,306,659	$1,718,038.97
TOTAL		247,800,632	3,091,830,532	$20,805,902.15
3rd QUARTER		62,060,431	774,333,523	$5,210,734.33
4th QUARTER		62,449,367	779,186,309	$5,243,390.26
1st QUARTER		61,252,433	764,252,054	$5,142,892.95
2nd QUARTER		62,038,401	774,058,646	$5,208,884.60
TOTAL COMPANY		247,800,632	3,091,830,532	$20,805,902.15

SECTION 3

PUBLIC VERSION

COST SUPPORT MATERIAL
PART 69 COST ALLOCATION - TOTAL INTERSTATE

INDEX TO DETAIL PART 69 ALLOCATION FORMS

DESCRIPTION	SCHEDULE
REVENUE REQUIREMENT SUMMARY BY PRIMARY ELEMENT	SUM1
REVENUE REQUIREMENT SUMMARY, INCOME TAXES	A-1
SUMMARY OF TELEPHONE PLANT AND RESERVES	A-2
GENERAL SUPPORT FACILITIES AND MISC PLANT ALLOCATION	A-3
OPERATOR SYSTEMS AND SWITCHING EQUIPMENT	A-41
CENTRAL OFFICE TRANSMISSION EQUIPMENT	A-42
INFORMATION ORIG/TERM AND CABLE AND WIRE FACILITIES	A-5
OTHER TELECOMMUNICATIONS PLANT ALLOCATION	A-6
ACCUMULATED DEPRECIATION, AMORT & DEFERRED INCOME TAXES	A-7
SUMMARY OF OPERATING EXP AND TAX AND MISC TAX ITEMS	A-8
PLANT SPECIFIC EXPENSE ALLOCATION	A-9
PLANT NONSPECIFIC EXPENSE ALLOCATION	A-10
CUSTOMER OPERATIONS EXPENSE ALLOCATION	A-11
CORPORATE OPERATIONS EXPENSE ALLOCATION	A-12
JOINT USE FACILITIES ALLOCATION FACTORS	AL-1

PUBLIC VERSION

IOWA NETWORK ACCESS DIVISION
PROJECTED JUNE 30, 2013

COST SUPPORT MATERIAL
PART 69 COST ALLOCATION - TOTAL INTERSTATE

SECTION 3

A-1,1of1

SUMMARY OF REVENUE REQUIREMENT BY ACCESS ELEMENT

A-1,1of1

					COMMON LINE		TRAFFIC SENSITIVE					SPECIAL ACCESS						
									COMMON TRANSPORT		DEDICATED	INEL TERMINATION		CHANNEL MILEAGE			IX CATEGORY	
LN	A/C	DESCRIPTION	TOTAL COMPANY	SOURCE	LIMITED PAY	COMMON LINE	SWITCHING	INFO	TERM	FACILITY	TRANSPORT	ALLOCATED	TERM	TERM	FACILITY	B&C	MSG	P.L.
1		NET INVESTMENT FOR SETTLEMENTS	1,996,259	(NOTE A)	0	0	1,343,546	0	652,713	0	0	0	0	0	0	0	0	0
2		RATE OF RETURN	11.2500%		11.2500%	11.2500%	11.2500%	11.2500%	11.2500%	11.2500%	11.2500%	11.2500%	11.2500%	11.2500%	11.2500%	11.2500%	11.2500%	11.2500%
3		RETURN ON INVESTMENT	224,579	LN 1*LN 2	0	0	151,149	0	73,430	0	0	0	0	0	0	0	0	0
4		ALLOW FOR FUNDS USED DURING CONSTR	0	A-8,LN 29	0	0	0	0	0	0	0	0	0	0	0	0	0	0
5		NET RETURN FOR SETTLEMENTS	224,579	LN 3-LN 4	0	0	151,149	0	73,430	0	0	0	0	0	0	0	0	0
6		FEDERAL OPERATING INCOME TAX - ACTUAL	0	RECORDS	0	0	0	0	0	0	0	0	0	0	0	0	0	0
7		FEDERAL OPERATING INCOME TAX - OPTION	115,692	LN 30	0	0	77,865	0	37,828	0	0	0	0	0	0	0	0	0
8		FEDERAL ITC AMORTIZATION	0	A-12,LN 22	0	0	0	0	0	0	0	0	0	0	0	0	0	0
9		STATE OPERATING INCOME TAX - ACTUAL	0	RECORDS	0	0	0	0	0	0	0	0	0	0	0	0	0	0
10		STATE OPERATING INCOME TAX - OPTION	38,513	LN 36	0	0	25,920	0	12,592	0	0	0	0	0	0	0	0	0
11		STATE ITC AMORTIZATION	0	A-12,LN 23	0	0	0	0	0	0	0	0	0	0	0	0	0	0
12		PROVISION FOR DEFERRED INCOME TAX	0	RECORDS	0	0	0	0	0	0	0	0	0	0	0	0	0	0
13		OPERATING EXPENSE & OTHER TAXES	17,927,639	A-8,LN 18	0	0	5,142,487	0	2,498,289	10,286,862	0	0	0	0	0	0	0	0
14		NONOPERATING EXP	70,760	A-8,LN 23	0	0	47,624	0	23,136	0	0	0	0	0	0	0	0	0
15		UNCOLLECTIBLES	2,461,934	A-8,LN 28	0	0	1,656,960	0	804,974	0	0	0	0	0	0	0	0	0
16		BASIS FOR GROSS RECEIPTS TAX	20,839,116		0	0	7,102,005	0	3,450,249	10,286,862	0	0	0	0	0	0	0	0
17		GROSS RECEIPTS TAX RATE	0.0000%		0.0000%	0.0000%	0.0000%	0.0000%	0.0000%	0.0000%	0.0000%	0.0000%	0.0000%	0.0000%	0.0000%	0.0000%	0.0000%	0.0000%
18		GROSS RECEIPTS TAX	0	LN16*LN17	0	0	0	0	0	0	0	0	0	0	0	0	0	0
19		TOTAL REVENUE REQUIREMENT	20,839,116	LN16+LN18	0	0	7,102,005	0	3,450,249	10,286,862	0	0	0	0	0	0	0	0

NOTE A: INCLUDES A-2,LN 31 LESS A/C 2004, TPUC - LONG TERM

		OPTIONAL GROSS UP INCOME TAX CALCULATION																
20		RETURN ON INVESTMENT	224,579	LN 3	0	0	151,149	0	73,430	0	0	0	0	0	0	0	0	0
21		INTEREST AND RELATED ITEMS	0	A-12,LN 16	0	0	0	0	0	0	0	0	0	0	0	0	0	0
22		OTHER INCOME ADJUSTMENTS	0	A-12,LN 20	0	0	0	0	0	0	0	0	0	0	0	0	0	0
23		TOTAL INCOME ADJUSTMENTS	0	LN21+LN22	0	0	0	0	0	0	0	0	0	0	0	0	0	0
24		RETURN LESS INCOME ADJ	224,579	LN20-LN23	0	0	151,149	0	73,430	0	0	0	0	0	0	0	0	0
25		FEDERAL ITC AMORTIZATION	0	A-12,LN 22	0	0	0	0	0	0	0	0	0	0	0	0	0	0
26		FIT BASE	224,579		0	0	151,149	0	73,430	0	0	0	0	0	0	0	0	0
27		FEDERAL TAXABLE INCOME	340,271		0	0	229,014	0	111,258	0	0	0	0	0	0	0	0	0
28	34.00%	FEDERAL INCOME TAX	115,692	LN 27*FTR	0	0	77,865	0	37,828	0	0	0	0	0	0	0	0	0
29		FEDERAL SURTAX ALLOCATION	0	/LN 26	0	0	0	0	0	0	0	0	0	0	0	0	0	0
30		NET FEDERAL TAX BEFORE ITC AMORT	115,692	LN28-LN29	0	0	77,865	0	37,828	0	0	0	0	0	0	0	0	0
31		STATE ITC AMORTIZATION	0	A-12, LN23	0	0	0	0	0	0	0	0	0	0	0	0	0	0
32		SIT BASE	340,271		0	0	229,014	0	111,258	0	0	0	0	0	0	0	0	0
33		STATE TAXABLE INCOME	386,672		0	0	260,243	0	126,429	0	0	0	0	0	0	0	0	0
34	12.00%	STATE INCOME TAX	38,513	LN 33*STR	0	0	25,920	0	12,592	0	0	0	0	0	0	0	0	0
35		STATE SURTAX ALLOCATION	0	/LN 32	0	0	0	0	0	0	0	0	0	0	0	0	0	0
36		NET STATE INCOME TAX BEFORE ITC AMORT	38,513	LN34-LN35	0	0	25,920	0	12,592	0	0	0	0	0	0	0	0	0
37		FEDERAL TAX AT MAXIMUM RATE	115,692		0	0	77,865	0	37,828	0	0	0	0	0	0	0	0	0
38		INCOME ADJUSTMENT FOR FIT	0		0	0	0	0	0	0	0	0	0	0	0	0	0	0

PUBLIC VERSION

SUMMARY OF TELEPHONE PLANT AND RESERVES

					COMMON LINE		TRAFFIC SENSITIVE					SPECIAL ACCESS						
					LIMITED	COMMON			COMMON TRANSPORT		DEDICATED	NEL TERMINATION		CHANNEL MILEAGE			IX CATEGORY	
LN	A/C	DESCRIPTION	TOTAL COMPANY	SOURCE	PAY	LINE	SWITCHING	INFO	TERM	FACILITY	TRANSPORT	ALLOCATED	TERM	TERM	FACILITY	B&C	MSG	P.L.
		NET INVESTMENT SUMMARY																
1		GENERAL SUPPORT FACILITIES	5,517,041	A-3,LN 6C	0	0	3,713,145	0	1,803,896	0	0	0	0	0	0		0	0
2		CENTRAL OFFICE SWITCHING	26,001,379	A-4,LN 21+25			17,499,760		8,501,618		0						0	
3		OPERATOR SYSTEMS	0	A-4,LN 17			0	0	0		0						0	
4		CENTRAL OFFICE TRANSMISSION	0	A-4,LN 41	0	0			0		0	0	0	0			0	0
5		INFORMATION ORIG/TERM	0	A-5,LN 10	0	0							0					
6		CABLE AND WIRE FACILITIES	0	A-5,LN 21	0	0				0	0	0	0		0		0	0
7		TANGIBLE ASSETS	949,856	A-3,LN 14	0	0	639,283	0	310,572	0	0	0	0	0	0		0	0
8		INTANGIBLE ASSETS	0	A-3,LN 15	0	0	0	0	0	0	0	0	0	0	0		0	0
9		TOTAL PLANT IN SERVICE	32,468,276		0	0	21,852,189	0	10,616,087	0	0	0	0	0	0		0	0
10		% DISTRIBUTION	100.0000%		0.0000%	0.0000%	67.3032%	0.0000%	32.6968%	0.0000%	0.0000%	0.0000%	0.0000%	0.0000%	0.0000%		0.0000%	0.0000%
11		PROPERTY HELD FOR FUTURE USE	0	A-6,LN 6	0	0	0	0	0	0	0	0	0	0	0		0	0
12		PLANT UNDER CONSTRUCT. - SHORT TERM	174,680	A-6,LN 13	0	0	117,565	0	57,115	0	0	0	0	0	0		0	0
13		PLANT UNDER CONSTRUCT. - LONG TERM	0	A-6,LN 20	0	0	0	0	0	0	0	0	0	0	0		0	0
14		TELEPHONE PLANT ADJUSTMENT	0	A-6,LN 27	0	0	0	0	0	0	0	0	0	0	0		0	0
15		TOTAL PROPERTY,PLANT & EQUIP.	32,642,956		0	0	21,969,754	0	10,673,201	0	0	0	0	0	0		0	0
16		% DISTRIBUTION	100.0000%		0.0000%	0.0000%	67.3032%	0.0000%	32.6968%	0.0000%	0.0000%	0.0000%	0.0000%	0.0000%	0.0000%		0.0000%	0.0000%
17		ACCUM DEPRECIATION - PLANT IN SERVICE	28,342,578	A-7,LN 7	0	0	19,075,462	0	9,267,115	0	0	0	0	0	0		0	0
18		ACCUM DEPRECIATION - FUTURE USE	0	A-7,LN 8	0	0	0	0	0	0	0	0	0	0	0		0	0
19		ACCUM AMORTIZATION - TANGIBLE PROPERTY	796,936	A-7,LN 15	0	0	536,364	0	260,573	0	0	0	0	0	0		0	0
20		ACCUM AMORTIZATION - INTANGIBLE PROP.	0	A-7,LN 16	0	0	0	0	0	0	0	0	0	0	0		0	0
21		ACCUM AMORTIZATION - TEL PLANT ADJ.	0	A-7,LN 17	0	0	0	0	0	0	0	0	0	0	0		0	0
22		OPERATING DEFERRED INCOME TAX	2,184,244	A-7,LN 26	0	0	1,470,066	0	714,178	0	0	0	0	0	0		0	0
23		OTHER DEFERRED CREDITS - NET	0	A-7,LN 34	0	0	0	0	0	0	0	0	0	0	0		0	0
24		NET TELEPHONE PLANT	1,319,197		0	0	887,862	0	431,335	0	0	0	0	0	0		0	0
25		% DISTRIBUTION	100.0000%		0.0000%	0.0000%	67.3032%	0.0000%	32.6968%	0.0000%	0.0000%	0.0000%	0.0000%	0.0000%	0.0000%		0.0000%	0.0000%
26		MATERIALS AND SUPPLIES	0	A-3,LN 16	0	0	0	0	0	0	0	0	0	0	0		0	0
27		RTB STOCK	0	A-3,LN 17	0	0	0	0	0	0	0	0	0	0	0		0	0
28		EQUAL ACCESS EQUIPMENT	0	A-3,LN 8			0											
29		OTHER JURISDICTIONAL ASSETS	0	A-3,LN 18	0	0	0	0	0	0	0	0	0	0	0		0	0
30		CASH WORKING CAPITAL	677,062	A-3,LN 10	0	0	455,684	0	221,378	0	0	0	0	0	0		0	0
31		NET TELEPHONE PLANT,M&S AND CASH WORKING CAPITAL	1,996,259		0	0	1,343,546	0	652,713	0	0	0	0	0	0		0	0
32		% DISTRIBUTION	100.0000%		0.0000%	0.0000%	67.3032%	0.0000%	32.6968%	0.0000%	0.0000%	0.0000%	0.0000%	0.0000%	0.0000%		0.0000%	0.0000%

PUBLIC VERSION

GENERAL SUPPORT FACILITIES AND MISCELLANEOUS PLANT ALLOCATION

					COMMON LINE		TRAFFIC SENSITIVE					SPECIAL ACCESS						
									COMMON TRANSPORT		DEDICATED	NEL TERMINATION		CHANNEL MILEAGE			IX CATEGORY	
LN	A/C	DESCRIPTION	TOTAL COMPANY	SOURCE	LIMITED PAY	COMMON LINE	SWITCHING	INFO	TERM	FACILITY	TRANSPORT	ALLOCATED	TERM	TERM	FACILITY	B&C	MSG	P.L.
		BASIS FOR GENERAL SUPPORT FACILITIES																
1		CENTRAL OFFICE EQUIPMENT	26,001,379	A-4,LN 42	0	0	17,499,760	0	8,501,618		0	0	0	0			0	0
2		INFORMATION ORIG/TERM	0	A-5,LN 10	0	0							0					
3		CWF EXCL CAT 1.3	0	A-5,LN 23	0	0				0	0	0	0		0		0	0
4		TOTAL	26,001,379		0	0	17,499,760	0	8,501,618	0	0	0	0	0	0		0	0
5		% DISTRIBUTION	100.0000%		0.0000%	0.0000%	67.3032%	0.0000%	32.6968%	0.0000%	0.0000%	0.0000%	0.0000%	0.0000%	0.0000%		0.0000%	0.0000%
		GENERAL SUPPORT ASSETS																
6a		ALLOCATED	5,517,041	LN 5	0	0	3,713,145	0	1,803,896	0	0	0	0	0	0		0	0
6b		DIRECT NON ACCESS	0	DIRECT													0	0
6c		TOTAL GENERAL SUPPORT ASSETS	5,517,041		0	0	3,713,145	0	1,803,896	0	0	0	0	0	0		0	0
7		% DISTRIBUTION	100.0000%		0.0000%	0.0000%	67.3032%	0.0000%	32.6968%	0.0000%	0.0000%	0.0000%	0.0000%	0.0000%	0.0000%		0.0000%	0.0000%
8		EQUAL ACCESS EQUIPMENT	0	DIRECT			0											
9		COE,IOT,CWF,GENERAL SUPPORT AND EQUAL ACCESS EQUIPMENT	31,518,420		0	0	21,212,906	0	10,305,514	0	0	0	0	0	0		0	0
10		% DISTRIBUTION	100.0000%		0.0000%	0.0000%	67.3032%	0.0000%	32.6968%	0.0000%	0.0000%	0.0000%	0.0000%	0.0000%	0.0000%		0.0000%	0.0000%
11		TANGIBLE ASSETS																
12		CAPITAL LEASES	0	LN 10	0	0	0	0	0	0	0	0	0	0	0		0	0
13		LEASEHOLD IMPROVEMENTS	949,856	LN 10	0	0	639,283	0	310,572	0	0	0	0	0	0		0	0
14		TOTAL	949,856		0	0	639,283	0	310,572	0	0	0	0	0	0		0	0
15		INTANGIBLE ASSETS	0	LN 10	0	0	0	0	0	0	0	0	0	0	0		0	0
16		MATERIALS AND SUPPLIES	0	LN 10	0	0	0	0	0	0	0	0	0	0	0		0	0
17		RTB STOCK	0	LN 10	0	0	0	0	0	0	0	0	0	0	0		0	0
18		OTHER JURISDICTIONAL ASSETS	0	LN 10	0	0	0	0	0	0	0	0	0	0	0		0	0
19		COE,IOT,CWF,GEN SUPP & EQUAL ACCESS FOR APPORTIONING PRESUBSCRIPTION	31,518,420		0	0	21,212,906	0	10,305,514	0	0							
20		% DISTRIBUTION	100.0000%		0.0000%	0.0000%	67.3032%	0.0000%	32.6968%	0.0000%	0.0000%							
21		COE,IOT & CWF EXCL CCL FOR ASSIGNING CARRIER ACCESS BILLING EXPENSES	26,001,379				17,499,760	0	8,501,618	0	0	0	0	0	0			
22		% DISTRIBUTION	100.0000%				67.3032%	0.0000%	32.6968%	0.0000%	0.0000%	0.0000%	0.0000%	0.0000%	0.0000%			

PUBLIC VERSION

CENTRAL OFFICE EQUIPMENT ALLOCATION

					COMMON LINE		TRAFFIC SENSITIVE					SPECIAL ACCESS						
									COMMON TRANSPORT		DEDICATED	NEL TERMINATION		CHANNEL MILEAGE			IX CATEGORY	
LN	A/C	DESCRIPTION	TOTAL COMPANY	SOURCE	LIMITED PAY	COMMON LINE	SWITCHING	INFO	TERM	FACILITY	TRANSPORT	ALLOCATED	TERM	TERM	FACILITY	B&C	MSG	P.L.
		ALLOCATION FACTORS																
1		STANDARD WORK SECONDS																
2		- MANUAL BOARDS	100.0000%	AL-1,LN 9			0.0000%	0.0000%									100.0000%	
3		- TSPS COMPLEX	100.0000%	AL-1,LN 10			0.0000%	0.0000%									100.0000%	
4		EQUIVALENT ACCESS LINES - MSG COE	0.0000%	AL-1,LN 2	0.0000%	0.0000%						0.0000%						
5		IX CIRCUIT TERMINATIONS - MSG COE	100.0000%	AL-1,LN 6					100.0000%		0.0000%							
		CENTRAL OFFICE EQUIPMENT																
6	2220	OPERATOR SYSTEMS																
7		MANUAL SWITCHBOARDS	0	LN 2			0	0									0	
8		AUXILIARY SWITCHBOARDS																
9		- DIRECTORY ASSISTANCE	0	DIRECT				0										
10		- INTERCEPT	0	DIRECT			0											
11		- OTHER	0	DIRECT													0	
12		SERVICE OBSERVING BOARDS	0	LN 27			0	0	0		0						0	
13		TSPS																
14		- OPERATOR	0	LN 3			0	0									0	
15		- RTA	0	LN 27			0	0	0		0						0	
16		- OTHER	0	LN 27			0	0	0		0						0	
17		TOTAL OPERATOR SYSTEMS	0				0	0	0		0						0	
18	2210	TANDEM SWITCHING EQUIPMENT																
19		ACCESS	8,501,618	DIRECT					8,501,618									
20		NON ACCESS	XXX	DIRECT													XXX	
21		TOTAL TANDEM SWITCH	8,501,618						8,501,618								0	
22	2210	LOCAL SWITCHING EQUIPMENT																
23		ACCESS	17,499,760	DIRECT			17,499,760											
24		DEDICATED	0	DIRECT							0							
25		TOTAL LOCAL SWITCH	17,499,760				17,499,760				0							
26		TOTAL CAT1 EXCL SVC OBS, CAT 2 AND 3	26,001,379				17,499,760	0	8,501,618		0						0	
27		% DISTRIBUTION	100.0000%	LN 26			67.3032%	0.0000%	32.6968%		0.0000%						0.0000%	

PUBLIC VERSION

CENTRAL OFFICE EQUIPMENT ALLOCATION

A-4,2of2

					COMMON LINE		TRAFFIC SENSITIVE					SPECIAL ACCESS						
									COMMON TRANSPORT		DEDICATED	INEL TERMINATION		CHANNEL MILEAGE			IX CATEGORY	
LN	A/C	DESCRIPTION	TOTAL COMPANY	SOURCE	LIMITED PAY	COMMON LINE	SWITCHING	INFO	TERM	FACILITY	TRANSPORT	ALLOCATED	TERM	TERM	FACILITY	B&C	MSG	P.L.
28	2230	CENTRAL OFFICE TRANSMISSION																
29		EXCHANGE WIDEBAND	0	DIRECT					0					0				
30		EXCHANGE TRUNK - BASIC	0	DIRECT					0					0				
31		EXCHANGE TRUNK - SPECIAL	0	DIRECT							0			0				
32		SUBSCRIBER LINE	0	LN 4/DIRECT	0	0						0	0					
33		INTEREXCHANGE CIRCUIT																
34		FURNINSHED OTHERS	0	DIRECT							0			0				
35		ACCESS - BASIC	0	LN 5/DIRECT					0		0			0				
36		ACCESS - SPECIAL	0	DIRECT							0			0				
37		NON ACCESS	0	DIRECT													XXX	0
38		TOTAL IX CIRCUIT	0						0		0			0			0	0
39		HOST/REMOTE CIRCUIT	0	DIRECT					0					0				
40		EQUIPMENT RENTED OTHERS	0	DIRECT													0	0
41		TOTAL CENTRAL OFFICE TRANSMISSION	0		0	0			0		0	0	0	0			0	0
42		TOTAL CENTRAL OFFICE EQUIPMENT	26,001,379		0	0	17,499,760	0	8,501,618		0	0	0	0			0	0
43		% DISTRIBUTION	100.0000%		0.0000%	0.0000%	67.3032%	0.0000%	32.6968%		0.0000%	0.0000%	0.0000%	0.0000%			0.0000%	0.0000%
		COE RATIOS																
44		OPERATOR SYSTEMS	0.0000%	LN 17			0.0000%	0.0000%	0.0000%		0.0000%						0.0000%	
45		TANDEM SWITCHING	100.0000%	LN 21					100.0000%								0.0000%	
46		LOCAL SWITCHING	100.0000%	LN 25			100.0000%				0.0000%							
47		CENTRAL OFFICE SWITCHING	100.0000%	LN 21+25			67.3032%		32.6968%		0.0000%						0.0000%	
48		CENTRAL OFFICE TRANSMISSION	100.0000%	LN 37	0.0000%	0.0000%			100.0000%		0.0000%	0.0000%	0.0000%	0.0000%			0.0000%	0.0000%

PUBLIC VERSION

INFORMATION ORIGINATION/TERMINATION AND CABLE AND WIRE FACILITIES

					COMMON LINE		TRAFFIC SENSITIVE					SPECIAL ACCESS						
									COMMON TRANSPORT		DEDICATED	INEL TERMINATION		CHANNEL MILEAGE			IX CATEGORY	
LN	A/C	DESCRIPTION	TOTAL COMPANY	SOURCE	LIMITED PAY	COMMON LINE	SWITCHING	INFO	TERM	FACILITY	TRANSPORT	ALLOCATED	TERM	TERM	FACILITY	B&C	MSG	P.L.
		ALLOCATION FACTORS																
1		EQUIVALENT ACCESS LINES - MSG CWF	0.0000%	AL-1,LN 4	0.0000%	0.0000%						0.0000%						
2		IX CIRCUIT MILES - MSG CWF	100.0000%	AL-1,LN 8						100.0000%	0.0000%							
3	2310	INFORMATION ORIG/TERM																
4		OTHER IOT EQUIPMENT																
5		COIN PUBLIC TELEPHONE	0	DIRECT		0												
6		COINLESS PUBLIC TELEPHONE	0	DIRECT	0													
7		OTHER	0	DIRECT		0							0					
8		SUBTOTAL	0		0	0							0					
9		NEW CUSTOMER PREMISE EQUIP	0	DIRECT		0							0					
10		TOTAL ORIG/TERM EQUIP	0		0	0							0					
11		% DISTRIBUTION	0.0000%		0.0000%	0.0000%							0.0000%					
12	2410	CABLE AND WIRE FACILITIES																
13		SUBSCRIBER LINE	0	LN 1/DIRECT	0	0						0	0					
14		EXCHANGE WIDEBAND	0	DIRECT						0					0			
15a		EXCHANGE TRUNK - BASIC	0	DIRECT						0					0			
15b		EXCHANGE TRUNK - SPECIAL	0	DIRECT							0				0			
16		INTEREXCHANGE WIDEBAND	0	DIRECT						0					0			
17a		IX TRUNK - ACCESS	0	LN 2/DIRECT						0	0				0			
17b		IX TRUNK - SPECIAL	0	DIRECT							0				0			
18		IX TRUNK - NON ACCESS	0	DIRECT													XXX	0
19		HOST/REMOTE	0	DIRECT						0					0			
20		EQUIPMENT FURNISHED OTHERS	0	DIRECT													0	0
21		TOTAL CABLE AND WIRE FACILITIES	0		0	0				0	0	0	0		0		0	0
22		% DISTRIBUTION	100.0000%		0.0000%	0.0000%				100.0000%	0.0000%	0.0000%	0.0000%		0.0000%		0.0000%	0.0000%
23		TOTAL CWF EXCLUDING CAT 1.3	0		0	0				0	0	0	0		0		0	0
24		% DISTRIBUTION	100.0000%		0.0000%	0.0000%				100.0000%	0.0000%	0.0000%	0.0000%		0.0000%		0.0000%	0.0000%

PUBLIC VERSION

OTHER TELECOMMUNICATIONS PLANT ALLOCATION

A-6,1of1

					COMMON LINE		TRAFFIC SENSITIVE					SPECIAL ACCESS						
					LIMITED	COMMON			COMMON TRANSPORT		DEDICATED	NEL TERMINATION		CHANNEL MILEAGE			IX CATEGORY	
LN	A/C	DESCRIPTION	TOTAL COMPANY	SOURCE	PAY	LINE	SWITCHING	INFO	TERM	FACILITY	TRANSPORT	ALLOCATED	TERM	TERM	FACILITY	B&C	MSG	P.L.
		OTHER TELECOMMUNICATIONS PLANT																
1	2002	PROPERTY HELD FOR FUTURE USE																
2		GENERAL SUPPORT	0	A-3,LN 7	0	0	0	0	0	0	0	0	0	0	0		0	0
3		CENTRAL OFFICE EQUIPMENT	0	A-4,LN 43	0	0	0	0	0	0	0	0	0	0	0		0	0
4		CABLE AND WIRE FACILITIES	0	A-5,LN 22	0	0				0	0	0	0	0	0		0	0
5		UNDISTRIBUTED	0	A-3,LN 10	0	0	0	0	0	0	0	0	0	0	0		0	0
6		TOTAL	0		0	0	0	0	0	0	0	0	0	0	0		0	0
7		% DISTRIBUTION	0.0000%		0.0000%	0.0000%	0.0000%	0.0000%	0.0000%	0.0000%	0.0000%	0.0000%	0.0000%	0.0000%	0.0000%		0.0000%	0.0000%
8	2003	PLANT UNDER CONSTR. - SHORT TERM																
9		GENERAL SUPPORT	0	A-3,LN 7	0	0	0	0	0	0	0	0	0	0	0		0	0
10		CENTRAL OFFICE EQUIPMENT	0	A-4,LN 43	0	0	0	0	0	0	0	0	0	0	0		0	0
11		CABLE AND WIRE FACILITIES	0	A-5,LN 22	0	0				0	0	0	0	0	0		0	0
12		UNDISTRIBUTED	174,680	A-3,LN 10	0	0	117,565	0	57,115	0	0	0	0	0	0		0	0
13		TOTAL	174,680		0	0	117,565	0	57,115	0	0	0	0	0	0		0	0
14		% DISTRIBUTION	100.0000%		0.0000%	0.0000%	67.3032%	0.0000%	32.6968%	0.0000%	0.0000%	0.0000%	0.0000%	0.0000%	0.0000%		0.0000%	0.0000%
15	2004	PLANT UNDER CONSTR. - LONG TERM																
16		GENERAL SUPPORT	0	A-3,LN 7	0	0	0	0	0	0	0	0	0	0	0		0	0
17		CENTRAL OFFICE EQUIPMENT	0	A-4,LN 43	0	0	0	0	0	0	0	0	0	0	0		0	0
18		CABLE AND WIRE FACILITIES	0	A-5,LN 22	0	0				0	0	0	0	0	0		0	0
19		UNDISTRIBUTED	0	A-3,LN 10	0	0	0	0	0	0	0	0	0	0	0		0	0
20		TOTAL	0		0	0	0	0	0	0	0	0	0	0	0		0	0
21		% DISTRIBUTION	0.0000%		0.0000%	0.0000%	0.0000%	0.0000%	0.0000%	0.0000%	0.0000%	0.0000%	0.0000%	0.0000%	0.0000%		0.0000%	0.0000%
22	2005	TELECOMMUNICATIONS PLANT ADJUST.																
23		GENERAL SUPPORT	0	A-3,LN 7	0	0	0	0	0	0	0	0	0	0	0		0	0
24		CENTRAL OFFICE EQUIPMENT	0	A-4,LN 43	0	0	0	0	0	0	0	0	0	0	0		0	0
25		CABLE AND WIRE FACILITIES	0	A-5,LN 22	0	0				0	0	0	0	0	0		0	0
26		UNDISTRIBUTED	0	A-3,LN 10	0	0	0	0	0	0	0	0	0	0	0		0	0
27		TOTAL	0		0	0	0	0	0	0	0	0	0	0	0		0	0
28		% DISTRIBUTION	0.0000%		0.0000%	0.0000%	0.0000%	0.0000%	0.0000%	0.0000%	0.0000%	0.0000%	0.0000%	0.0000%	0.0000%		0.0000%	0.0000%

PUBLIC VERSION

ACCUMULATED DEPRECIATION, AMORTIZATION AND DEFERRED INCOME TAXES

					COMMON LINE		TRAFFIC SENSITIVE					SPECIAL ACCESS						
									COMMON TRANSPORT		DEDICATED	NEL TERMINATION		CHANNEL MILEAGE			IX CATEGORY	
LN	A/C	DESCRIPTION	TOTAL COMPANY	SOURCE	LIMITED PAY	COMMON LINE	SWITCHING	INFO	TERM	FACILITY	TRANSPORT	ALLOCATED	TERM	TERM	FACILITY	B&C	MSG	P.L.
1	3100	ACCUM DEPRECIATION - PLANT IN SERVICE																
2		GENERAL SUPPORT	4,463,091	A-3,LN 10	0	0	3,003,803	0	1,459,288	0	0	0	0	0	0		0	0
3		CENTRAL OFFICE SWITCHING EQUIPMENT	23,879,487	A-3,LN 10	0	0	16,071,659	0	7,807,828	0	0	0	0	0	0		0	0
4		OPERATOR SYSTEMS EQUIPMENT	0	A-3,LN 10	0	0	0	0	0	0	0	0	0	0	0		0	0
5		CENTRAL OFFICE TRANSMISSION	0	A-3,LN 10	0	0	0	0	0	0	0	0	0	0	0		0	0
6		UNDISTRIBUTED COE	0	A-3,LN 10	0	0	0	0	0	0	0	0	0	0	0		0	0
7		INFORMATION ORIG/TERM	0	A-3,LN 10	0	0	0	0	0	0	0	0	0	0	0		0	0
8		CABLE AND WIRE FACILITIES	0	A-3,LN 10	0	0	0	0	0	0	0	0	0	0	0		0	0
9		TOTAL ACCUM DEPR - TPIS	28,342,578		0	0	19,075,462	0	9,267,115	0	0	0	0	0	0		0	0
10	3200	ACCUM DEPRECIATION - FUTURE USE	0	A-3,LN 10	0	0	0	0	0	0	0	0	0	0	0		0	0
11		TOTAL ACCUM DEPRECIATION	28,342,578		0	0	19,075,462	0	9,267,115	0	0	0	0	0	0		0	0
12		% DISTRIBUTION	100.0000%		0.0000%	0.0000%	67.3032%	0.0000%	32.6968%	0.0000%	0.0000%	0.0000%	0.0000%	0.0000%	0.0000%		0.0000%	0.0000%
		ACCUMULATED AMORTIZATION																
13	3400	TANGIBLE ASSETS																
14		CAPITAL LEASES	0	A-3,LN 10	0	0	0	0	0	0	0	0	0	0	0		0	0
15		LEASEHOLD IMPROVEMENTS	796,936	A-3,LN 10	0	0	536,364	0	260,573	0	0	0	0	0	0		0	0
16		UNDISTRIBUTED	0	A-3,LN 10	0	0	0	0	0	0	0	0	0	0	0		0	0
17		TOTAL ACCUM AMORT - TANGIBLE	796,936		0	0	536,364	0	260,573	0	0	0	0	0	0		0	0
18	3500	INTANGIBLE ASSETS	0	A-3,LN 10	0	0	0	0	0	0	0	0	0	0	0		0	0
19	3600	TELEPHONE PLANT ADJUSTMENT	0	A-3,LN 10	0	0	0	0	0	0	0	0	0	0	0		0	0
20		TOTAL ACCUM AMORTIZATION	796,936		0	0	536,364	0	260,573	0	0	0	0	0	0		0	0
21		% DISTRIBUTION	100.0000%		0.0000%	0.0000%	67.3032%	0.0000%	32.6968%	0.0000%	0.0000%	0.0000%	0.0000%	0.0000%	0.0000%		0.0000%	0.0000%
22	4100&	NET OPERATING DEFERRED INC TAX																
23	4340	GENERAL SUPPORT	0	A-3,LN 10	0	0	0	0	0	0	0	0	0	0	0		0	0
24		CENTRAL OFFICE EQUIP	0	A-3,LN 10	0	0	0	0	0	0	0	0	0	0	0		0	0
25		INFORMATION ORIG/TERM	0	A-3,LN 10	0	0	0	0	0	0	0	0	0	0	0		0	0
26		CABLE AND WIRE FACILITIES	0	A-3,LN 10	0	0	0	0	0	0	0	0	0	0	0		0	0
27		UNDISTRIBUTED	2,184,244	A-3,LN 10	0	0	1,470,066	0	714,178	0	0	0	0	0	0		0	0
28		TOTAL NET DEFERRED INC TAX	2,184,244		0	0	1,470,066	0	714,178	0	0	0	0	0	0		0	0
29		% DISTRIBUTION	100.0000%		0.0000%	0.0000%	67.3032%	0.0000%	32.6968%	0.0000%	0.0000%	0.0000%	0.0000%	0.0000%	0.0000%		0.0000%	0.0000%
30	4360	OTHER DEFERRED CREDITS - NET																
31		GENERAL SUPPORT	0	A-3,LN 10	0	0	0	0	0	0	0	0	0	0	0		0	0
32		CENTRAL OFFICE EQUIP	0	A-3,LN 10	0	0	0	0	0	0	0	0	0	0	0		0	0
33		INFORMATION ORIG/TERM	0	A-3,LN 10	0	0	0	0	0	0	0	0	0	0	0		0	0
34		CABLE AND WIRE FACILITIES	0	A-3,LN 10	0	0	0	0	0	0	0	0	0	0	0		0	0
35		UNDISTRIBUTED	0	A-3,LN 10	0	0	0	0	0	0	0	0	0	0	0		0	0
36		TOTAL OTHER DEFERRED CREDITS	0		0	0	0	0	0	0	0	0	0	0	0		0	0
37		% DISTRIBUTION	0.0000%		0.0000%	0.0000%	0.0000%	0.0000%	0.0000%	0.0000%	0.0000%	0.0000%	0.0000%	0.0000%	0.0000%		0.0000%	0.0000%

PUBLIC VERSION

SUMMARY OF OPERATING EXPENSE AND TAX AND MISCELLANEOUS TAX ITEMS

A-8,1of1

					COMMON LINE		TRAFFIC SENSITIVE					SPECIAL ACCESS						
									COMMON TRANSPORT		DEDICATED	CHANNEL TERMINATION		CHANNEL MILEAGE			IX CATEGORY	
LN	A/C	DESCRIPTION	TOTAL COMPANY	SOURCE	LIMITED PAY	COMMON LINE	SWITCHING	INFO	TERM	FACILITY	TRANSPORT	ALLOCATED	TERM	TERM	FACILITY	B&C	MSG	P.L.
		OPERATING EXPENSE AND TAX																
1	6110	NETWORK SUPPORT EXPENSE	0	A-9,LN 6	0	0	0	0	0	0	0	0	0	0	0	0	0	0
2	6120	GENERAL SUPPORT EXPENSE	943,253	A-9,LN 7	0	0	634,839	0	308,413	0	0	0	0	0	0		0	0
3	6210	CENTRAL OFFICE EXPENSE	918,888	A-9,LN 15	0	0	618,441	0	300,447	0	0	0	0	0	0	0	0	0
4	6310	INFORMATION ORIG/TERM EXP	0	A-9,LN 22	0	0	0	0	0	0	0	0	0	0	0	0	0	0
5	6410	CABLE AND WIRE FACILITIES EXP	8,256,765	A-9,LN 24	0	0	0	0	0	8,256,765	0	0	0	0	0		0	0
6	6510	OTHER PLANT EXPENSE	0	A-10,LN 6	0	0	0	0	0	0	0	0	0	0	0		0	0
7	6530	NETWORK OPERATIONS EXPENSE	1,051,777	A-10,LN 7	0	0	707,879	0	343,897	0	0	0	0	0	0		0	0
8	6540	ACCESS CHARGE EXPENSE	0	A-10,LN 8													0	0
9	6610	MARKETING EXPENSE	0	A-11,LN 1	0	0	0	0	0	0	0	0	0	0	0		0	0
8	6620	SERVICES EXPENSE	34,622	A-11,LN29	0	0	23,302	0	11,320	0	0	0	0	0	0	0	0	0
11	6710	EXECUTIVE AND PLANNING EXP	496,499	A-12,LN 8	0	0	87,930	0	42,718	365,851	0	0	0	0	0	0	0	0
12	6720	GENERAL AND ADMINISTRATIVE EXP	2,258,557	A-12,LN 9	0	0	399,991	0	194,321	1,664,245	0	0	0	0	0	0	0	0
13		SUBTOTAL OPERATING EXPENSE	13,960,361		0	0	2,472,382	0	1,201,117	10,286,862	0	0	0	0	0	0	0	0
14		% DISTRIBUTION	100.0000%		0.0000%	0.0000%	17.7100%	0.0000%	8.6038%	73.6862%	0.0000%	0.0000%	0.0000%	0.0000%	0.0000%	0.0000%	0.0000%	0.0000%
15	6560	DEPRECIATION AND AMORTIZATION	3,751,194	A-10,LN 19+27	0	0	2,524,674	0	1,226,520	0	0	0	0	0	0	0	0	0
16	7200	OTHER OPERATING TAX	216,083	A-12,LN 24	0	0	145,431	0	70,652	0	0	0	0	0	0		0	0
17		EQUAL ACCESS EXPENSE	0	A-12,LN 12			0											
18		TOTAL OPERATING EXP & TAX	17,927,639		0	0	5,142,487	0	2,498,289	10,286,862	0	0	0	0	0	0	0	0
19		% DISTRIBUTION	100.0000%		0.0000%	0.0000%	28.6847%	0.0000%	13.9354%	57.3799%	0.0000%	0.0000%	0.0000%	0.0000%	0.0000%	0.0000%	0.0000%	0.0000%
20	7370	NON OPERATING EXPENSE																
21		ABANDONED CONSTRUCTION	0	A-3,LN 10	0	0	0	0	0	0	0	0	0	0	0	0	0	0
22		CONTRIBUTIONS	70,760	A-3,LN 10	0	0	47,624	0	23,136	0	0	0	0	0	0	0	0	0
23		TOTAL NON OPERATING EXP	70,760		0	0	47,624	0	23,136	0	0	0	0	0	0	0	0	0
24		UNCOLLECTIBLES																
25	5310	END USER MSG TOLL	0	A-3,LN 10	0	0	0	0	0	0	0	0	0	0	0	0	0	0
26	5320	END USER COMMON LINE	0	DIRECT		0												
27	5330	IX CARRIER	2,461,934	A-3,LN 22			1,656,960	0	804,974	0	0	0	0	0	0	0	0	0
28		TOTAL UNCOLLECTIBLES	2,461,934		0	0	1,656,960	0	804,974	0	0	0	0	0	0	0	0	0
29	7340	ALLOWANCE FOR FUNDS USED	0	A-3,LN 10	0	0	0	0	0	0	0	0	0	0	0	0	0	0

PUBLIC VERSION

PLANT SPECIFIC EXPENSE ALLOCATION

A-9,1of1

					COMMON LINE		TRAFFIC SENSITIVE					SPECIAL ACCESS						
									COMMON TRANSPORT		DEDICATED	CHANNEL TERMINATION		CHANNEL MILEAGE			IX CATEGORY	
LN	A/C	DESCRIPTION	TOTAL COMPANY	SOURCE	LIMITED PAY	COMMON LINE	SWITCHING	INFO	TERM	FACILITY	TRANSPORT	ALLOCATED	TERM	TERM	FACILITY	B&C	MSG	P.L.
		BASIS FOR NETWORK SUPPORT EXPENSE																
1		GEN SUPPORT, COE, IOT AND C&WF	31,518,420	VARIOUS	0	0	21,212,906	0	10,305,514	0	0	0	0	0	0		0	0
2		EQUAL ACCESS EQUIPMENT	0	A-3,LN 8			0											
3		TOTAL	31,518,420		0	0	21,212,906	0	10,305,514	0	0	0	0	0	0		0	0
4		% DISTRIBUTION	100.0000%		0.0000%	0.0000%	67.3032%	0.0000%	32.6968%	0.0000%	0.0000%	0.0000%	0.0000%	0.0000%	0.0000%		0.0000%	0.0000%
		PLANT SPECIFIC EXPENSES																
5		GENERAL SUPPORT EXPENSE																
6	6110	NETWORK SUPPORT	0	LN 4	0	0	0	0	0	0	0	0	0	0	0		0	0
7	6120	GENERAL SUPPORT	943,253	A-3,LN 7	0	0	634,839	0	308,413	0	0	0	0	0	0		0	0
8		TOTAL GENERAL SUPPORT EXP	943,253		0	0	634,839	0	308,413	0	0	0	0	0	0		0	0
9		% DISTRIBUTION	100.0000%		0.0000%	0.0000%	67.3032%	0.0000%	32.6968%	0.0000%	0.0000%	0.0000%	0.0000%	0.0000%	0.0000%		0.0000%	0.0000%
10		CENTRAL OFFICE EXPENSE																
11	6210	CENTRAL OFFICE SWITCHING EXPENSE	918,888	A-4,LN 43	0	0	618,441	0	300,447		0	0	0	0			0	0
12	6220	OPERATOR SYSTEMS EXPENSE	0	A-4,LN 43	0	0	0	0	0		0	0	0	0			0	0
13	6230	CENTRAL OFFICE TRANSMISSION EXPENSE	0	A-4,LN 43	0	0	0	0	0		0	0	0	0			0	0
14		UNDISTRIBUTED	0	A-4,LN 43	0	0	0	0	0		0	0	0	0			0	0
15		TOTAL CENTRAL OFFICE EXPENSE	918,888		0	0	618,441	0	300,447		0	0	0	0			0	0
16		% DISTRIBUTION	100.0000%		0.0000%	0.0000%	67.3032%	0.0000%	32.6968%		0.0000%	0.0000%	0.0000%	0.0000%			0.0000%	0.0000%
17	6310	INFORMATION ORIG/TERM EXPENSE																
18		COIN PAY TELEPHONE	0	DIRECT		0												
19		COINLESS PAY TELEPHONE	0	DIRECT	0													
20		OTHER	0	DIRECT		0							0					
21		CPE	0	DIRECT		0												
22		TOTAL INFORMATION ORIG/TERM EXP	0		0	0							0					
23		% DISTRIBUTION	0.0000%		0.0000%	0.0000%							0.0000%					
24	6410	CABLE AND WIRE FACILITIES EXPENSE	8,256,765	A-5,LN 22	0	0				8,256,765	0	0	0	0	0		0	0
25		TOTAL PLANT SPECIFIC EXPENSE	10,118,905		0	0	1,253,280	0	608,860	8,256,765	0	0	0	0	0		0	0
26		% DISTRIBUTION	100.0000%		0.0000%	0.0000%	12.3855%	0.0000%	6.0171%	81.5974%	0.0000%	0.0000%	0.0000%	0.0000%	0.0000%		0.0000%	0.0000%

PUBLIC VERSION

PLANT NON SPECIFIC EXPENSE ALLOCATION

A-10,1of1

					COMMON LINE		TRAFFIC SENSITIVE					SPECIAL ACCESS						
									COMMON TRANSPORT		DEDICATED	NEL TERMINATION		CHANNEL MILEAGE			IX CATEGORY	
LN	A/C	DESCRIPTION	TOTAL COMPANY	SOURCE	LIMITED PAY	COMMON LINE	SWITCHING	INFO	TERM	FACILITY	TRANSPORT	ALLOCATED	TERM	TERM	FACILITY	B&C	MSG	P.L.
1		CENTRAL OFFICE EQUIPMENT	26,001,379	A-4,LN 38	0	0	17,499,760	0	8,501,618		0	0	0	0			0	0
2		INFORMATION ORIG/TERM	0	A-5,LN 10	0	0							0					
3		CABLE AND WIRE FACILITIES	0	A-5,LN 21	0	0				0	0	0	0		0		0	0
4		TOTAL	26,001,379		0	0	17,499,760	0	8,501,618	0	0	0	0	0	0		0	0
5		% DISTRIBUTION	100.0000%		0.0000%	0.0000%	67.3032%	0.0000%	32.6968%	0.0000%	0.0000%	0.0000%	0.0000%	0.0000%	0.0000%		0.0000%	0.0000%
		PLANT NONSPECIFIC EXPENSE																
6	6510	OTHER PROP PLANT & EQUIP EXPENSE	0	LN 5	0	0	0	0	0	0	0	0	0	0	0		0	0
7	6530	NETWORK OPERATIONS EXPENSE	1,051,777	LN 5	0	0	707,879	0	343,897	0	0	0	0	0	0		0	0
8	6540	ACCESS CHARGE EXPENSE	0	DIRECT													0	0
9	6560	DEPRECIATION EXPENSE																
10		GENERAL SUPPORT	731,968	A-3,LN 7	0	0	492,638	0	239,330	0	0	0	0	0	0		0	0
11		CENTRAL OFFICE SWITCHING EQUIPMENT	2,924,241	A-4,LN 47			1,968,108		956,133		0						0	
12		OPERATOR SYSTEMS EQUIPMENT	0	A-4,LN 44			0	0	0		0						0	
13		CENTRAL OFFICE TRANSMISSION	0	A-4,LN 48	0	0			0		0	0	0	0			0	0
14		UNDISTRIBUTED COE	0	A-4,LN 43	0	0	0	0	0		0	0	0	0			0	0
15		INFORMATION ORIG/TERM	0	A-5,LN 11	0	0							0					
16		CABLE AND WIRE FACILITIES	0	A-5,LN 22	0	0				0	0	0	0		0		0	0
17		TOTAL DEP EXP - PLANT IN SERVICE	3,656,209		0	0	2,460,746	0	1,195,463	0	0	0	0	0	0		0	0
18		PROPERTY HELD FOR FUTURE USE	0	A-6,LN 7	0	0	0	0	0	0	0	0	0	0	0		0	0
19		TOTAL DEPRECIATION EXPENSE	3,656,209		0	0	2,460,746	0	1,195,463	0	0	0	0	0	0		0	0
20		% DISTRIBUTION	100.0000%		0.0000%	0.0000%	67.3032%	0.0000%	32.6968%	0.0000%	0.0000%	0.0000%	0.0000%	0.0000%	0.0000%		0.0000%	0.0000%
		AMORTIZATION EXPENSE																
21	6563	CAPITAL LEASE	0	A-3,LN 10	0	0	0	0	0	0	0	0	0	0	0		0	0
22	6563	LEASEHOLD IMPROVEMNTS	94,986	A-3,LN 10	0	0	63,928	0	31,057	0	0	0	0	0	0		0	0
23	6563	UNDISTRIBUTED	0	A-3,LN 10	0	0	0	0	0	0	0	0	0	0	0		0	0
24		SUBTOTAL	94,986		0	0	63,928	0	31,057	0	0	0	0	0	0		0	0
25	6564	INTANGIBLE ASSETS	0	A-3,LN 10	0	0	0	0	0	0	0	0	0	0	0		0	0
26	6565	OTHER - TEL PLANT ADJUSTMENT	0	A-6,LN 28	0	0	0	0	0	0	0	0	0	0	0		0	0
27		TOTAL AMORTIZATION EXPENSE	94,986		0	0	63,928	0	31,057	0	0	0	0	0	0		0	0
28		% DISTRIBUTION	100.0000%		0.0000%	0.0000%	67.3032%	0.0000%	32.6968%	0.0000%	0.0000%	0.0000%	0.0000%	0.0000%	0.0000%		0.0000%	0.0000%
29		TOTAL PLANT NON SPECIFIC EXPENSE	4,802,971		0	0	3,232,553	0	1,570,418	0	0	0	0	0	0		0	0
30		% DISTRIBUTION	100.0000%		0.0000%	0.0000%	67.3032%	0.0000%	32.6968%	0.0000%	0.0000%	0.0000%	0.0000%	0.0000%	0.0000%		0.0000%	0.0000%

PUBLIC VERSION

CUSTOMER OPERATIONS EXPENSE ALLOCATION

A-11,1of1

					COMMON LINE		TRAFFIC SENSITIVE					SPECIAL ACCESS						
					LIMITED	COMMON			COMMON TRANSPORT		DEDICATED	NEL TERMINATION		CHANNEL MILEAGE			IX CATEGORY	
LN	A/C	DESCRIPTION	TOTAL COMPANY	SOURCE	PAY	LINE	SWITCHING	INFO	TERM	FACILITY	TRANSPORT	ALLOCATED	TERM	TERM	FACILITY	B&C	MSG	P.L.
		CUSTOMER OPERATIONS EXPENSES																
1	6610	MARKETING	0	A-3,LN 10	0	0	0	0	0	0	0	0	0	0	0		0	0
2		TELEPHONE OPERATOR SERVICES																
3	6621	- CALL COMPLETION INCL DA	0	SWS-OPERATORS			0	0									0	
4		- OPERATOR SERVICES UNDER CONTRACT	0	DIRECT			0	0									0	
5	6622	PUBLISHED DIRECTORY LISTINGS	0	DIRECT				0										
6	6623	ALL OTHER																
7	1.0	LOCAL BUSINESS OFFICE																
8		- END USER SVC ORDER PROCESSING																
9		- PRESUBSCRIPTION	0	A-3,LN 20	0	0	0	0	0	0	0							
10		- OTHER	0	AL-1,LN 12									0			0	0	
11		- END USER PAYMENT & COLLECTION	0	AL-1,LN 13		0							0			0	0	
12		- END USER BILLING INQUIRY	0	AL-1,LN 14		0							0			0	0	
13		- IX CARRIER SVC ORDER PROCESSING	0	AL-1,LN 15	0	0	0	0	0	0	0		0			0	0	
14		- IX CARRIER PAYMENT & COLLECTION	30,048	AL-1,LN 16	0	0	20,224	0	9,825	0	0		0			0	0	
15		- IX CARRIER BILLING INQUIRY	0	AL-1,LN 17	0	0	0	0	0	0	0		0			0	0	
16		- COIN COLLECT AND ADMINISTRATION	0	AL-1,LN 18	0	0												
17		SUBTOTAL LOCAL BUSINESS OFFICE	30,048		0	0	20,224	0	9,825	0	0	0	0			0	0	
18	2.0	CUSTOMER SERVICES (REV ACCTG)																
19		- MESSAGE PROCESSING																
20		- TOLL TICKET PROCESSING	0	DIRECT												0		
21		- LOCAL MESSAGE PROCESSING	0	DIRECT												0		
22		- OTHER BILLING & COLLECTION	0	DIRECT												0		
23		- END USER COMMON LINE	0	DIRECT		0												
24		- CARRIER ACCESS BILLING (CABS)	4,451	A-3,LN 22			2,995	0	1,455	0	0	0	0	0	0	0	0	0
25		SUBTOTAL CUSTOMER SERVICES	4,451		0	0	2,995	0	1,455	0	0	0	0	0	0	0	0	0
26		TOTAL CAT 1 AND CAT 2	34,499		0	0	23,219	0	11,280	0	0	0	0	0	0	0	0	0
27		% DISTRIBUTION	100.0000%		0.0000%	0.0000%	67.3032%	0.0000%	32.6968%	0.0000%	0.0000%	0.0000%	0.0000%	0.0000%	0.0000%	0.0000%	0.0000%	0.0000%
28	3.0	ALL OTHER CUSTOMER SERVICE	123	/LN 34	0	0	83	0	40	0	0	0	0	0	0	0	0	0
29		TOTAL SERVICES EXPENSE	34,622		0	0	23,302	0	11,320	0	0	0	0	0	0	0	0	0
30		% DISTRIBUTION	100.0000%		0.0000%	0.0000%	67.3032%	0.0000%	32.6968%	0.0000%	0.0000%	0.0000%	0.0000%	0.0000%	0.0000%	0.0000%	0.0000%	0.0000%
31		TOTAL CUSTOMER OPERATIONS EXPENSE	34,622		0	0	23,302	0	11,320	0	0	0	0	0	0	0	0	0
32		% DISTRIBUTION	100.0000%		0.0000%	0.0000%	67.3032%	0.0000%	32.6968%	0.0000%	0.0000%	0.0000%	0.0000%	0.0000%	0.0000%	0.0000%	0.0000%	0.0000%
33		CUSTOMER OPERATIONS EXCL MARKETING	34,499		0	0	23,219	0	11,280	0	0	0	0	0	0	0	0	0
34		% DISTRIBUTION	100.0000%		0.0000%	0.0000%	67.3032%	0.0000%	32.6968%	0.0000%	0.0000%	0.0000%	0.0000%	0.0000%	0.0000%	0.0000%	0.0000%	0.0000%

PUBLIC VERSION

CORPORATE OPERATIONS EXPENSE ALLOCATION

A-12,1of1

					COMMON LINE		TRAFFIC SENSITIVE					SPECIAL ACCESS						
									COMMON TRANSPORT		DEDICATED	NEL TERMINATION		CHANNEL MILEAGE			IX CATEGORY	
LN	A/C	DESCRIPTION	TOTAL COMPANY	SOURCE	LIMITED PAY	COMMON LINE	SWITCHING	INFO	TERM	FACILITY	TRANSPORT	ALLOCATED	TERM	TERM	FACILITY	B&C	MSG	P.L.
		BIG THREE EXPENSES																
1		PLANT SPECIFIC EXPENSE	10,118,905	A-9,LN 25	0	0	1,253,280	0	608,860	8,256,765	0	0	0	0	0		0	0
2		OTHER PLANT EXPENSE	0	A-10,LN 7	0	0	0	0	0	0	0	0	0	0	0		0	0
3		NETWORK OPERATIONS EXPENSE	1,051,777	A-10,LN 8	0	0	707,879	0	343,897	0	0	0	0	0	0		0	0
4		ACCESS CHARGE EXPENSE	0	A-10,LN 9													0	0
5		CUSTOMER OPERATIONS EXPENSE	34,622	A-11,LN 31	0	0	23,302	0	11,320	0	0	0	0	0	0	0	0	0
6		TOTAL BIG THREE EXPENSES	11,205,304		0	0	1,984,461	0	964,078	8,256,765	0	0	0	0	0	0	0	0
7		% DISTRIBUTION	100.0000%		0.0000%	0.0000%	17.7100%	0.0000%	8.6038%	73.6862%	0.0000%	0.0000%	0.0000%	0.0000%	0.0000%	0.0000%	0.0000%	0.0000%
		CORPORATE OPERATING EXPENSE																
8	6710	EXECUTIVE AND PLANNING	496,499	LN 7	0	0	87,930	0	42,718	365,851	0	0	0	0	0	0	0	0
9	6720	GENERAL AND ADMINISTRATIVE	2,258,557	LN 7	0	0	399,991	0	194,321	1,664,245	0	0	0	0	0	0	0	0
10		TOTAL CORPORATE OPERATIONS	2,755,056		0	0	487,921	0	237,039	2,030,097	0	0	0	0	0	0	0	0
11		% DISTRIBUTION	100.0000%		0.0000%	0.0000%	17.7100%	0.0000%	8.6038%	73.6862%	0.0000%	0.0000%	0.0000%	0.0000%	0.0000%	0.0000%	0.0000%	0.0000%
12		EQUAL ACCESS EXPENSE	0	DIRECT			0											
13	7500	INTEREST EXPENSE																
14		CAPITAL LEASE	0	A-3,LN 10	0	0	0	0	0	0	0	0	0	0	0	0	0	0
15		OTHER	0	A-3,LN 10	0	0	0	0	0	0	0	0	0	0	0	0	0	0
16		TOTAL	0		0	0	0	0	0	0	0	0	0	0	0	0	0	0
17		OTHER INCOME ADJUSTMENTS																
18		BASED ON PLANT	0	A-2,LN 10	0	0	0	0	0	0	0	0	0	0	0	0	0	0
19		BASED ON EXPENSE	0	LN 7	0	0	0	0	0	0	0	0	0	0	0	0	0	0
20		TOTAL	0		0	0	0	0	0	0	0	0	0	0	0	0	0	0
21		OPERATING TAXES																
22	7210	FEDERAL ITC AMORTIZATION	0	A-3,LN 10	0	0	0	0	0	0	0	0	0	0	0	0	0	0
23	7210	STATE ITC AMORTIZATION	0	A-3,LN 10	0	0	0	0	0	0	0	0	0	0	0	0	0	0
24	7240	OTHER OPERATING TAXES	216,083	A-3,LN 10	0	0	145,431	0	70,652	0	0	0	0	0	0	0	0	0
25		TOTAL OPERATING TAXES	216,083		0	0	145,431	0	70,652	0	0	0	0	0	0	0	0	0

PUBLIC VERSION

DEVELOPMENT OF JOINT USE FACILITIES ALLOCATION FACTORS

					COMMON LINE		TRAFFIC SENSITIVE					SPECIAL ACCESS						
									COMMON TRANSPORT		DEDICATED	INEL TERMINATION		CHANNEL MILEAGE			IX CATEGORY	
LN	A/C	DESCRIPTION	TOTAL COMPANY	SOURCE	LIMITED PAY	COMMON LINE	SWITCHING	INFO	TERM	FACILITY	TRANSPORT	ALLOCATED	TERM	TERM	FACILITY	B&C	MSG	P.L.
1		EQUIVALENT ACCESS LINES - MSG COE	0		0	0						0					0	
2		% DISTRIBUTION	0.0000%		0.0000%	0.0000%						0.0000%						
3		EQUIVALENT ACCESS LINES - MSG CWF	0		0	0						0						
4		% DISTRIBUTION	0.0000%		0.0000%	0.0000%						0.0000%						
5		IX CIRCUIT TERMINATIONS - MSG COE	2,024						2,024		0							
6		% DISTRIBUTION	100.0000%						100.0000%		0.0000%							
7		IX CIRCUIT MILES - MSG CWF	1,011,879							1011879.00	0.00							
8		% DISTRIBUTION	100.0000%							100.0000%	0.0000%							
		DISTRIBUTION FACTORS																
9		STD WORK SECONDS - MANUAL BOARDS	100.0000%				0.0000%	0.0000%									100.0000%	
10		STD WORK SECONDS - TSPS	100.0000%				0.0000%	0.0000%									100.0000%	
11		STD WORK SECONDS - OPERATORS	100.0000%				0.0000%	0.0000%									100.0000%	
12		END USER SVC ORDER CONTACTS	0.0000%										0.0000%			0.0000%	0.0000%	
13		END USER PAYMENT & COLLECTION	0.0000%			0.0000%							0.0000%			0.0000%	0.0000%	
14		END USER BILLING INQUIRY CONTACTS	0.0000%			0.0000%							0.0000%			0.0000%	0.0000%	
15		IX CARRIER SVC ORDER CONTACTS	100.0000%		0.0000%	0.0000%	67.3032%	0.0000%	32.6968%	0.0000%	0.0000%		0.0000%			0.0000%		
16		IX CARRIER PAYMENT & COLLECTION	100.0000%		0.0000%	0.0000%	67.3032%	0.0000%	32.6968%	0.0000%	0.0000%		0.0000%			0.0000%		
17		IX CARRIER BILLING INQUIRY CONTACTS	100.0000%		0.0000%	0.0000%	67.3032%	0.0000%	32.6968%	0.0000%	0.0000%		0.0000%			0.0000%		
18		PUBLIC TELEPHONE REVENUE	0.0000%		0.0000%	0.0000%												
19		END USER BILLING & COLLECTION	0.0000%													0.0000%		
20		OPERATOR SERVICES UNDER CONTRACT	0.0000%				0.0000%	0.0000%									0.0000%	

*** PROPRIETARY INFORMATION ***

2002 Copyright TIA, Inc. v1.9

SECTION 4

PUBLIC VERSION

LN	ALLOCATION RATIOS		TOTAL COMPANY	ALLOCATION BASIS	IOWA INTERSTATE MSG TOLL INTRALATA	IOWA INTERSTATE MSG TOLL INTERLATA	IOWA OTHER
	REVENUE REQUIREMENT SUMMARY						
1	NET INVESTMENT FOR SETTLEMENTS		2,321,669	NOTE A	0	1,996,259	325,410
2	RATE OF RETURN				11.2500%	11.2500%	11.2500%
3	RETURN ON INVESTMENT		255,493	LN1*LN 2	0	224,579	30,914
4	ALLOWANCE FOR FUNDS USED DURING CONSTR		0	S-8,LN 29	0	0	0
5	NET RETURN FOR SETTLEMENTS		255,493	LN3-LN4	0	224,579	30,914
6	TOTAL ITC AMORTIZATION		0	S-12,LN 28+29	0	0	0
7	FEDERAL OPERATING INCOME TAX	(ACTUAL)	0	S-12,LN 30	0	0	0
8	FEDERAL OPERATING INCOME TAX	(OPTION)	131,618	LN28-LN11	0	115,692	15,925
9	STATE AND LOCAL INCOME TAX	(ACTUAL)	0	S-12,LN 31	0	0	0
10	STATE AND LOCAL INCOME TAX	(OPTION)	43,814	LN 33	0	38,513	5,301
11	PROVISION FOR DEFERRED INCOME TAX		0	S-12,LN 33	0	0	0
13	OPERATING EXPENSE AND TAX		20,998,080	S-8,LN 18	0	17,927,639	3,070,441
14	NONOPERATING EXPENSE		83,292	S-8,LN 23	0	70,760	12,533
15	UNCOLLECTIBLES		2,690,638	S-8,LN 28	0	2,461,934	228,704
16	BASIS FOR GROSS RECEIPTS TAX		24,202,934		0	20,839,116	3,363,818
17	GROSS RECEIPTS TAX RATE	(GROSS UP)			0.0000%	0.0000%	0.0000%
18	GROSS RECEIPTS TAX		0		0	0	0
19	TOTAL REVENUE REQUIREMENT		24,202,934		0	20,839,116	3,363,818

NOTE A: INCLUDES NET TEL PLANT FROM SCH S-2,LN 33 LESS A/C's 2004 ,2006 ,2007 AND 1402 OTHER THAN RTB STOCK.

******* **** ********** ******** ********** ********** ********** ********** ********** **********

	OPTIONAL GROSS UP INCOME TAX CALCULATION						
20	RETURN ON INVESTMENT		255,493	LN 3	0	224,579	30,914
21	INTEREST AND RELATED ITEMS		0	S-12,LN 19	0	0	0
22	OTHER INCOME ADJUSTMENTS		0	S-12,LN 24+25	0	0	0
23	TOTAL INCOME ADJUSTMENTS		0	LN 21+22	0	0	0
24	FEDERAL ITC AMORTIZATION		0	S-12,LN 28	0	0	0
25	FEDERAL TAXABLE INCOME		387,111		0	340,271	46,839
26	FEDERAL INCOME TAX @	34.00%	131,618	LN 25*FIT	0	115,692	15,925
27	FEDERAL SURTAX ALLOCATION		0	S-2,LN 34	0	0	0
28	NET FEDERAL INCOME TAX BEFORE ITC		131,618	LN26-LN27	0	115,692	15,925
29	STATE ITC AMORTIZATION		0	S-12,LN 29	0	0	0
30	STATE TAXABLE INCOME		365,116		0	320,938	44,178
31	STATE INCOME TAX @	12.00%	43,814	LN 30*SIT	0	38,513	5,301
32	STATE SURTAX EXEMPTION		0	S-2,LN 34	0	0	0
33	NET STATE INCOME TAX BEFORE ITC		43,814		0	38,513	5,301

PUBLIC VERSION

S-2,1of1 SUMMARY OF NET TELEPHONE PLANT, M&S AND WORKING CAPITAL S-2,1of1

LN	ALLOCATION RATIOS		TOTAL COMPANY	ALLOCATION BASIS	IOWA INTERSTATE MSG TOLL INTRALATA	IOWA INTERSTATE MSG TOLL INTERLATA	IOWA NONACCESS
	NET INVESTMENT SUMMARY						
1	GENERAL SUPPORT FACILITIES	2110	6,376,433	S-3,LN 10	0	5,517,041	859,392
2	CENTRAL OFFICE SWITCHING EQUIPMENT	2210	30,051,625	S-4,LN 52	0	26,001,379	4,050,246
3	OPERATOR SYSTEMS EQUIPMENT	2220	0	S-4,LN 41	0	0	0
4	CENTRAL OFFICE TRANSMISSION EQUIPM	2230	0	S-4,LN 78	0	0	0
5	INFORMATION ORIG/TERM EQUIPMENT	2310	0	S-5,LN 17	0	0	0
6	CABLE AND WIRE FACILITIES	2410	0	S-5,LN 42	0	0	0
7	TANGIBLE ASSETS	2680	1,097,815	S-3,LN 29	0	949,856	147,959
8	INTANGIBLE ASSETS	2690	0	S-3,LN 36	0	0	0
9	TOTAL PLANT IN SERVICE A/C 2001		37,525,874		0	32,468,276	5,057,598
10	% DISTRIBUTION		100.0000%		0.0000%	86.5224%	13.4776%
11	PROPERTY HELD FOR FUTURE USE	2002	0	S-6,LN 9	0	0	0
12	PLANT UNDER CONSTR - SHORT TERM	2003	201,890	S-6,LN 15	0	174,680	27,210
13	PLANT UNDER CONSTR - LONG TERM	2004	0	S-6,LN 21	0	0	0
14	TELEPHONE PLANT ADJUSTMENT	2005	0	S-6,LN 27	0	0	0
15	NONOPERATING PLANT	2006	0	DIRECT			0
16	GOODWILL	2007	0	DIRECT			0
17	TOTAL PROPERTY, PLANT & EQUIPMENT		37,727,763		0	32,642,956	5,084,808
18	% DISTRIBUTION		100.0000%		0.0000%	86.5224%	13.4776%
19	ACCUM DEPRECIATION - PLANT IN SERVI	3100	32,757,513	S-7,LN 18	0	28,342,578	4,414,936
20	ACCUM DEPRECIATION - FUTURE USE	3200	0	S-7,LN 19	0	0	0
21	ACCUM AMORTIZATION - TANGIBLE PROP	3400	921,076	S-7,LN 23	0	796,936	124,139
22	ACCUM AMORTIZATION - INTANGIBLE PR	3500	0	S-7,LN 24	0	0	0
23	ACCUM AMORTIZATION - TEL PLANT ADJU	3600	0	S-7,LN 25	0	0	0
24	OPERATING DEFERRED INCOME TAX - NE	VAR	2,524,485	S-7,LN 32	0	2,184,244	340,241
25	OTHER DEFERRED CREDITS - NET	4360	0	S-7,LN 38	0	0	0
26	NET TELEPHONE PLANT		1,524,689		0	1,319,197	205,492
27	% DISTRIBUTION		100.0000%		0.0000%	86.5224%	13.4776%
28	MATERIALS AND SUPPLIES	1220	0	S-6,LN 31	0	0	0
29	INVESTMENT IN NONAFFILIATED CO'S	1402	0	S-6,LN 35	0	0	0
30	EQUAL ACCESS EQUIPMENT	1439	0	S-6,LN 36	0	0	0
31	OTHER JURISDICTIONAL ASSETS	1500	0	S-6,LN 37	0	0	0
32	CASH WORKING CAPITAL	XXXX	796,980	S-3,LN 3	0	677,062	119,918
33	NET TEL PLANT, M&S AND CASH WORKING CAPITAL		2,321,669		0	1,996,259	325,410
34	% DISTRIBUTION		100.0000%		0.0000%	85.9838%	14.0162%

PUBLIC VERSION

S-8,1of1 SUMMARY OF OPERATING EXPENSE AND TAX S-8,1of1

LN	ALLOCATION RATIOS		TOTAL COMPANY	ALLOCATION BASIS	IOWA INTERSTATE MSG TOLL INTRALATA	IOWA INTERSTATE MSG TOLL INTERLATA	IOWA NONACCESS
	OPERATING EXPENSE AND TAX SUMMARY						
1	NETWORK SUPPORT EXPENSE	6110	0	S-9,LN 7	0	0	0
2	GENERAL SUPPORT EXPENSE	6120	1,090,184	S-9,LN 8	0	943,253	146,931
3	CENTRAL OFFICE EXPENSE	6210	1,062,023	S-9,LN 15	0	918,888	143,136
4	INFORMATION ORIG/TERM EXPENSE	6310	0	S-9,LN 21	0	0	0
5	CABLE AND WIRE FACILITIES EXPENSE	6410	9,754,800	S-9,LN 25	0	8,256,765	1,498,035
6	OTHER PLANT EXPENSE	6510	0	S-10,LN 11	0	0	0
7	NETWORK OPERATIONS EXPENSE	6530	1,215,613	S-10,LN 13	0	1,051,777	163,836
8	ACCESS CHARGE EXPENSE	6540	0	S-10,LN 14	0	0	0
9	MARKETING EXPENSE	6610	0	S-11,LN 13	0	0	0
10	SERVICES EXPENSE	6620	47,180	S-11,LN 44	0	34,622	12,557
11	EXECUTIVE AND PLANNING EXPENSE	6710	584,437	S-12,LN 8+9	0	496,499	87,937
12	GENERAL AND ADMINISTRATIVE EXPENSI	6720	2,658,582	S-12,LN 11+12	0	2,258,557	400,024
13	SUBTOTAL OPERATING EXPENSES		16,412,817		0	13,960,361	2,452,456
14	% DISTRIBUTION		100.0000%		0.0000%	85.0577%	14.9423%
15	DEPRECIATION AND AMORTIZATION	6560	4,335,520	S-10,LN 22+29	0	3,751,194	584,325
16	OTHER OPERATING TAX	7240	249,743	S-12,LN 32	0	216,083	33,659
17	EQUAL ACCESS EXPENSE		0	S-12,LN 15	0	0	0
18	TOTAL OPERATING EXPENSE AND TAX		20,998,080		0	17,927,639	3,070,441
19	% DISTRIBUTION		100.0000%		0.0000%	85.3775%	14.6225%
	NON OPERATING EXPENSE	7370					
20	ABANDONED CONSTRUCTION		0	S-2,LN 10	0	0	0
21	CONTRIBUTIONS		83,292	S-12,LN 14	0	70,760	12,533
22	OTHER NON OPERATING EXPENSE		0	DIRECT			0
23	TOTAL NON OPERATING EXPENSE		83,292		0	70,760	12,533
24	% DISTRIBUTION		100.0000%		0.0000%	84.9535%	15.0465%
	UNCOLLECTIBLES						
25	END USER MSG TOLLS	5310	0	DIRECT	0	0	0
26	END USER COMMON LINE	5320	0	DIRECT	0	0	0
27	IX CARRIER	5330	2,690,638	S-11,LN 5	0	2,461,934	228,704
28	TOTAL UNCOLLECTIBLES		2,690,638		0	2,461,934	228,704
29	ALLOWANCE FOR FUNDS USED DURING C	7340	0	S-12,LN 3	0	0	0

SECTION 5

LN	DESCRIPTION	A/C	CAT	TOTAL COMPANY	ALLOCATION BASIS	ACCESS DIVISION	OTHER
	REVENUE REQUIREMENT SUMMARY						
1	NET INVESTMENT FOR SETTLEMENTS			39,137,373	NOTE A	2,321,669	36,815,704
2	RATE OF RETURN					11.0047%	-11.0047%
3	RETURN ON INVESTMENT			3,773,788	LN1*LN 2	255,493	3,518,295
4	ALLOWANCE FOR FUNDS USED DURING CONSTR			0	S-8,LN 30	0	0
5	NET RETURN FOR SETTLEMENTS			3,773,788	LN 3-LN 4	255,493	3,518,295
6	TOTAL ITC AMORTIZATION			0	S-12,LN 32	0	0
7	FEDERAL OPERATING INCOME TAX		(ACTUAL)	0		0	0
8	FEDERAL OPERATING INCOME TAX		(OPTION)	1,944,073	LN28-LN11	131,618	1,812,455
9	STATE AND LOCAL INCOME TAX		(ACTUAL)	0		0	0
10	STATE AND LOCAL INCOME TAX		(OPTION)	647,158	LN 32	43,814	603,344
11	PROVISION FOR DEFERRED INCOME TAX			0	S-12,LN 36	0	0
13	OPERATING EXPENSE AND TAX			91,963,040	S-8,LN 20	20,998,080	70,964,961
14	NONOPERATING EXPENSE			435,516	S-8,LN 25	83,292	352,224
15	UNCOLLECTIBLES			2,690,638	S-8,LN 29	2,690,638	0
16	BASIS FOR GROSS RECEIPTS TAX			101,454,212		24,202,934	77,251,278
17	GROSS RECEIPTS TAX RATE		(GROSS UP)			0.0000%	0.0000%
18	GROSS RECEIPTS TAX			0		0	0
19	TOTAL REVENUE REQUIREMENT			101,454,212		24,202,934	77,251,278

NOTE A: INCLUDES NET TEL PLANT FROM SCH S-2,LN 33 LESS A/C's 2004 ,2006 ,2007 AND 1402.

******* **** ********** ******** ********** ********** ********** ********** **********

	OPTIONAL GROSS UP INCOME TAX CALCULATION						
20	RETURN ON INVESTMENT			3,773,788	LN 3	255,493	3,518,295
21	INTEREST AND RELATED ITEMS			0	S-12,LN 22	0	0
22	OTHER INCOME ADJUSTMENTS			0	S-12,LN 27+28	0	0
23	TOTAL INCOME ADJUSTMENTS			0	LN 21+22	0	0
24	FEDERAL ITC AMORTIZATION			0	S-12,LN 32	0	0
25	FEDERAL TAXABLE INCOME			5,717,860		387,111	5,330,750
26	FEDERAL INCOME TAX	@	34.00%	1,944,073	LN 25*FIT	131,618	1,812,455
27	FEDERAL SURTAX ALLOCATION			0	S-2,LN 32	0	0
28	NET FEDERAL INCOME TAX BEFORE ITC			1,944,073	LN26-LN27	131,618	1,812,455
29	STATE TAXABLE INCOME			5,392,982		365,116	5,027,866
30	STATE INCOME TAX	@	12.00%	647,158	LN 29*SIT	43,814	603,344
31	STATE SURTAX EXEMPTION			0	S-2,LN 32	0	0
32	NET STATE INCOME TAX BEFORE ITC			647,158	LN30-LN31	43,814	603,344

S-2,1of1 SUMMARY OF NET TELEPHONE PLANT, M&S AND WORKING CAPITAL S-2,1of1

LN	DESCRIPTION	A/C	CAT	TOTAL COMPANY	ALLOCATION BASIS	ACCESS DIVISION	OTHER
	NET INVESTMENT SUMMARY						
1	GENERAL SUPPORT FACILITIES	2110		20,843,092	S-3,LN 27	6,376,433	14,466,659
2	CENTRAL OFFICE SWITCHING EQUIPMEN	2210		48,150,998	S-4,LN 17	30,051,625	18,099,372
3	CENTRAL OFFICE TRANSMISSION EQUIPI	2230		53,529,244	S-4,LN 31	0	53,529,244
4	CABLE AND WIRE FACILITIES	2410		43,102,372	S-5,LN 16	0	43,102,372
5	TANGIBLE ASSETS	2680		3,588,505	S-3,LN 54	1,097,815	2,490,690
6	INTANGIBLE ASSETS	2690		0	S-3,LN 61	0	0
7	TOTAL PLANT IN SERVICE A/C 2001			169,214,210		37,525,874	131,688,337
8	% DISTRIBUTION			100.0000%		22.1765%	77.8235%
9	PROPERTY HELD FOR FUTURE USE	2002		0	S-6,LN 9	0	0
10	PLANT UNDER CONSTR - SHORT TERM	2003		910,375	S-6,LN 15	201,890	708,485
11	PLANT UNDER CONSTR - LONG TERM	2004		0	S-6,LN 21	0	0
12	TELEPHONE PLANT ADJUSTMENT	2005		0	S-6,LN 27	0	0
13	NONOPERATING PLANT	2006		2,173,393	DIRECT		2,173,393
14	GOODWILL	2007		0	DIRECT		0
15	TOTAL PROPERTY, PLANT & EQUIPMENT			172,297,978		37,727,763	134,570,215
16	% DISTRIBUTION			100.0000%		21.8968%	78.1032%
17	ACCUM DEPRECIATION - PLANT IN SERVI	3100		120,307,976	S-7,LN 30	32,757,513	87,550,462
18	ACCUM DEPRECIATION - FUTURE USE	3200		0	S-7,LN 31	0	0
19	ACCUM AMORTIZATION - TANGIBLE PROI	3400		3,010,784	S-7,LN 36	921,076	2,089,709
20	ACCUM AMORTIZATION - INTANGIBLE PR	3500		0	S-7,LN 37	0	0
21	ACCUM AMORTIZATION - TEL PLANT ADJI	3600		0	S-7,LN 38	0	0
22	OPERATING DEFERRED INCOME TAX - NE	VAR		11,477,954	S-7,LN 44	2,524,485	8,953,470
23	OTHER DEFERRED CREDITS - NET	4360		0	S-7,LN 49	0	0
24	NET TELEPHONE PLANT			37,501,264		1,524,689	35,976,575
25	% DISTRIBUTION			100.0000%		4.0657%	95.9343%
26	MATERIALS AND SUPPLIES	1220		307,655	S-6,LN 32	0	307,655
27	PREPAID EXPENSES	1300		0	S-6,LN 37	0	0
28	INVESTMENT IN NONAFFILIATED CO'S	1402		141,370,086	S-6,LN 38	0	141,370,086
29	OTHER JURISDICTIONAL ASSETS	1500		0	S-6,LN 39	0	0
30	CASH WORKING CAPITAL	XXXX		3,501,846	COMPUTED	796,980	2,704,867
31	NET TEL PLANT, M&S AND CASH WORKING CAPITAL			182,680,852		2,321,669	180,359,183
32	% DISTRIBUTION			100.0000%		1.2709%	98.7291%

LN	DESCRIPTION	A/C	CAT	TOTAL COMPANY	ALLOCATION BASIS	ACCESS DIVISION	OTHER
	OPERATING EXPENSE AND TAX SUMMARY						
1	NETWORK SUPPORT EXPENSE	6110		293,801	S-9,LN 13-23	86,914	206,887
2	GENERAL SUPPORT EXPENSE	6120		3,024,002	S-9,LN 24-27	1,003,270	2,020,732
3	CENTRAL OFFICE EXPENSE	6210		3,939,307	S-9,LN 33	1,062,023	2,877,284
4	CABLE AND WIRE FACILITIES EXPENSE	6410		14,457,480	S-9,LN 35	9,754,800	4,702,680
5	OTHER PLANT EXPENSE	6510		24,138,817	S-10,LN 6	0	24,138,817
6	NETWORK OPERATIONS EXPENSE	6530		6,198,435	S-10,LN 13	1,215,613	4,982,822
7	ACCESS CHARGE EXPENSE	6540		7,469,084	S-10,LN 15	0	7,469,084
8	MARKETING EXPENSE	6610		5,011,363	S-11,LN 15	0	5,011,363
9	SERVICES EXPENSE	6620		3,001,025	S-11,LN 39	47,180	2,953,845
10	EXECUTIVE AND PLANNING EXPENSE	6710		1,585,123	S-12,LN 7	584,437	1,000,686
11	GENERAL AND ADMINISTRATIVE EXPENS	6720		7,042,248	S-12,LN 8-15	2,658,582	4,383,666
12	SUBTOTAL OPERATING EXPENSES			76,160,685		16,412,817	59,747,868
13	% DISTRIBUTION			100.0000%		21.5502%	78.4498%
14	DEPRECIATION - PLANT IN SERVICE	6561		14,511,982	S-10,LN 33	4,225,738	10,286,243
15	DEPRECIATION - FUTURE USE	6562		0	S-10,LN 34	0	0
16	AMORTIZATION - TANGIBLES	6563		358,851	S-3,LN42-44	109,782	249,069
17	AMORTIZATION - INTANGIBLES	6564		0	S-3,LN 45	0	0
18	AMORTIZATION - OTHER	6565		0	S-3,LN 46	0	0
19	OTHER OPERATING TAX	7240		931,523	S-12,LN 35	249,743	681,780
20	TOTAL OPERATING EXPENSE AND TAX			91,963,040		20,998,080	70,964,961
21	% DISTRIBUTION			100.0000%		22.8332%	77.1668%
	NON OPERATING EXPENSE	7370					
22	ABANDONED CONSTRUCTION			0	S-2,LN 8	0	0
23	CONTRIBUTIONS			364,391	S-12,LN 2	83,292	281,099
24	ALL OTHER			71,125	S-12,LN 2	0	71,125
25	TOTAL NON OPERATING EXPENSE			435,516		83,292	352,224
26	% DISTRIBUTION			100.0000%		19.1250%	80.8750%
	UNCOLLECTIBLES						
27	END USER MSG TOLLS	5310		0	DIRECT	XXX	0
28	IX CARRIER	5330		2,690,638	DIRECT	2,690,638	0
29	TOTAL UNCOLLECTIBLES			2,690,638		2,690,638	0
30	ALLOWANCE FOR FUNDS USED DURING (	7340		0	S-12,LN 4	0	0

PUBLIC VERSION

TARIFF REVIEW PLAN

INDEX

RORCOS-1(P)	Page 1 of 4
RORCOS-1(P)	Page 2 of 4
RORCOS-1(P)	Page 3 of 4
RORCOS-1(P)	Page 4 of 4
RORCOS-1(H)	Page 1 of 4
RORCOS-1(H)	Page 2 of 4
RORCOS-1(H)	Page 3 of 4
RORCOS-1(H)	Page 4 of 4
RORCOS-2	Page 1 of 3
RORCOS-2	Page 2 of 3
RORCOS-2	Page 3 of 3
RORMAG-1	Page 1 of 1
RORREV-1	Page 1 of 2
RORREV-1	Page 2 of 2
RORREV-2	Page 1 of 1
RORRTE-1	Page 1 of 2
RORRTE-1	Page 2 of 2
RORRTE-2	Page 1 of 1
RORRTE-3	Page 1 of 2
RORRTE-3	Page 2 of 2
RORDMD-1	Page 3
RORDMD-2	Page 1 of 1
RORDMD-3	Page 1 of 1
RORDMD-4	Page 1 of 1
RORDMD-5	Page 1 of 1
RORERN-1	Page 1 of 1
RORBSF-1	Page 1 of 1
RORDEM-1	Page 1 of 1
61.38 ACR-1 Historical	Page 1 of 1
61.38 ACR-1 Projected	Page 1 of 1
Certification	

SECTION 6

PUBLIC VERSION

COS-1(P)
Filing Date: 6/26/2012
Filing Entity: Telephone Company
Transmittal Number : 29
COSA: INIAAN12

Rate-of Return TRP
Cost Analysis Summary
Test Year, 7/12 to 6/13

		Total Company (A)	Part 64 Adjustments (B)	Other Adjustments (C)	Subject to Separations (D)	Total Interstate (E)	Billing & Collection (F)
	Revenues						
100	Network Access	n/a	n/a	n/a	n/a	n/a	n/a
110	Uncollectibles	n/a	n/a	n/a	n/a	n/a	n/a
120	Common Line Support	n/a	n/a	n/a	n/a	n/a	n/a
130	Long Term	n/a	n/a	n/a	n/a	n/a	n/a
140	Transitional	n/a	n/a	n/a	n/a	n/a	n/a
150	Miscellaneous	n/a	n/a	n/a	n/a	n/a	n/a
160	Net Revenues	n/a	n/a	n/a	n/a	n/a	n/a
		----	----	----	----	----	----
	Expenses	----	----	----	----	----	----
170	Plant Specific	n/a	n/a	n/a	n/a	10,118,906	0
171	Network Support	0	0	0	0	0	0
172	General Support	1,090,184	0	0	1,090,184	943,253	0
173	Central Office	1,062,023	0	0	1,062,023	918,888	0
174	Operator Systems	0	0	0	0	0	0
175	COE Switching	1,062,023	0	0	1,062,023	918,888	0
176	COE Transmission	0	0	0	0	0	0
177	IOT	0	0	0	0	0	0
178	Cable & Wire Facilities	9,754,800	0	0	9,754,800	8,256,765	0
180	Plant Non-Sp. Less Dep/Amor	n/a	n/a	n/a	n/a	1,051,777	0
190	Depreciation / Amortization	4,335,520	0	0	4,335,520	3,751,194	0
200	Customer Operations	n/a	n/a	n/a	n/a	34,622	0
201	Marketing	0	0	0	0	0	0
202	Local Business Office	38,110	0	0	38,110	30,048	0
203	Revenue Accounting	8,902	0	0	8,902	4,451	0
204	Other Billing & Collection	168	0	0	168	123	0
210	Access	n/a	n/a	n/a	n/a	0	n/a
220	Corporate Operations	n/a	n/a	n/a	n/a	2,755,056	0
230	AFUDC	n/a	n/a	n/a	n/a	n/a	n/a
240	Other Exp. & Adjustments	n/a	n/a	n/a	n/a	2,532,694	0
250	Taxes Other than FIT	n/a	n/a	n/a	n/a	254,596	0
260	Total Exp and Other Taxes	n/a	n/a	n/a	n/a	20,498,845	0
		----	----	----	----	----	----
	FIT Adjustments	----	----	----	----	----	----
270	Adjustment for FIT	0	0	0	0	0	0
280	Amortized ITC	0	0	0	0	0	0
290	Federal Income Taxes	n/a	n/a	n/a	n/a	0	n/a
		----	----	----	----	----	----
300	Total Expenses & Taxes	n/a	n/a	n/a	n/a	20,498,845	n/a
		----	----	----	----	----	----
	Telephone Plant in Service	----	----	----	----	----	----
310	General Support	6,376,433	0	0	6,376,433	5,517,041	0
320	Central Office Equip-Switch	30,051,625	0	0	30,051,625	26,001,379	0
321	Operator Systems	0	0	0	0	0	0
322	Tandem Switching	0	0	0	0	0	0
323	Local Switching Cat. 3	0	0	0	0	0	0
324	Equal Access	30,051,625	0	0	30,051,625	26,001,379	0
330	Central Office Equip-Trans	0	0	0	0	0	0
331	Subscriber Lines	0	0	0	0	0	0
332	Exchange Circuit	0	0	0	0	0	0
333	Interexchange Circuit	0	0	0	0	0	0
334	Host Remote	0	0	0	0	0	0
340	Cable & Wire	0	0	0	0	0	0
341	Subscriber Lines	0	0	0	0	0	0
342	Exchange	0	0	0	0	0	0
343	Interexchange	0	0	0	0	0	0
344	Host Remote	0	0	0	0	0	0
350	Info Orig/Term Equipment	0	0	0	0	0	0
360	Amortizable Assets	1,097,815	0	0	1,097,815	949,856	0
370	Total Plant In Service	37,525,873	0	0	37,525,873	32,468,276	0
		----	----	----	----	----	----
	Adjustments to TPIS	----	----	----	----	----	----
380	Depr / Amor Reserve	33,678,589	0	0	33,678,589	29,139,514	0
390	Accum Deferred Income Tax	2,524,485	0	0	2,524,485	2,184,244	0
400	Other Rate Base Adjust.	n/a	n/a	n/a	n/a	851,742	0
		----	----	----	----	----	----
	Return Data	----	----	----	----	----	----
410	Average Rate Base	n/a	n/a	n/a	n/a	1,996,260	n/a
420	Return	n/a	n/a	n/a	n/a	n/a	n/a
430	Rate of Return	n/a	n/a	n/a	n/a	n/a	n/a

PUBLIC VERSION

COS-1(P)
Filing Date: 6/26/2012
Filing Entity: Telephone Company
Transmittal Number : 29
COSA: INIAAN12

		Interstate Inter-exchange (G)	ROR Regulated I/S Access (H)	Pay Phone (I)	Inside Wire (J)	BFP (K)	Total Common Line (L)
	Revenues						
100	Network Access	n/a	20,805,902	0	0	0	0
110	Uncollectibles	n/a	0	0	0	0	0
120	Common Line Support	n/a	0	0	0	0	0
130	Long Term	n/a	0	0	0	0	0
140	Transitional	n/a	0	0	0	0	0
150	Miscellaneous	n/a	23,148	0	0	0	0
160	Net Revenues	n/a	20,829,050	0	0	0	0
		---	---	---	---	---	---
	Expenses	---	---	---	---	---	---
170	Plant Specific	0	10,118,906	0	0	0	0
171	Network Support	0	0	0	0	0	0
172	General Support	0	943,253	0	0	0	0
173	Central Office	0	918,888	0	0	0	0
174	Operator Systems	0	0	0	0	0	0
175	COE Switching	0	918,888	0	0	0	0
176	COE Transmission	0	0	0	0	0	0
177	IOT	0	0	0	0	0	0
178	Cable & Wire Facilities	0	8,256,765	0	0	0	0
180	Plant Non-Sp. Less Dep/Amor	0	1,051,777	0	0	0	0
190	Depreciation / Amortization	0	3,751,194	0	0	0	0
200	Customer Operations	0	34,622	0	0	0	0
201	Marketing	0	0	0	0	0	0
202	Local Business Office	0	30,048	0	0	0	0
203	Revenue Accounting	0	4,451	0	0	0	0
204	Other Billing & Collection	0	123	0	0	0	0
210	Access	0	n/a	n/a	n/a	n/a	n/a
220	Corporate Operations	0	2,755,056	0	0	0	0
230	AFUDC	n/a	0	0	0	0	0
240	Other Exp. & Adjustments	0	2,532,694	0	0	0	0
250	Taxes Other than FIT	0	254,596	0	0	0	0
260	Total Exp and Other Taxes	0	20,498,845	0	0	0	0
		---	---	---	---	---	---
	FIT Adjustments	---	---	---	---	---	---
270	Adjustment for FIT	0	0	0	0	0	0
280	Amortized ITC	0	0	0	0	0	0
290	Federal Income Taxes	n/a	112,270	0	0	0	0
		---	---	---	---	---	---
300	Total Expenses & Taxes	n/a	20,611,115	0	0	0	0
		---	---	---	---	---	---
	Telephone Plant in Service	---	---	---	---	---	---
310	General Support	0	5,517,041	0	0	0	0
320	Central Office Equip-Switch	0	26,001,379	0	0	0	0
321	Operator Systems	0	0	0	0	0	0
322	Tandem Switching	0	0	0	0	0	0
323	Local Switching Cat. 3	0	0	0	0	0	0
324	Equal Access	0	26,001,379	0	0	0	0
330	Central Office Equip-Trans	0	0	0	0	0	0
331	Subscriber Lines	0	0	0	0	0	0
332	Exchange Circuit	0	0	0	0	0	0
333	Interexchange Circuit	0	0	0	0	0	0
334	Host Remote	0	0	0	0	0	0
340	Cable & Wire	0	0	0	0	0	0
341	Subscriber Lines	0	0	0	0	0	0
342	Exchange	0	0	0	0	0	0
343	Interexchange	0	0	0	0	0	0
344	Host Remote	0	0	0	0	0	0
350	Info Orig/Term Equipment	0	0	0	0	0	0
360	Amortizable Assets	0	949,856	0	0	0	0
370	Total Plant In Service	0	32,468,276	0	0	0	0
		---	---	---	---	---	---
	Adjustments to TPIS	---	---	---	---	---	---
380	Depr / Amor Reserve	0	29,139,514	0	0	0	0
390	Accum Deferred Income Tax	0	2,184,244	0	0	0	0
400	Other Rate Base Adjust.	0	851,742	0	0	0	0
		---	---	---	---	---	---
	Return Data	---	---	---	---	---	---
410	Average Rate Base	n/a	1,996,260	0	0	0	0
420	Return	n/a	217,935	0	0	0	0
430	Rate of Return	11.25%	10.92%	0.00%	0.00%	0.00%	0.00%

PUBLIC VERSION

COS-1(P)
Filing Date: 6/26/2012
Filing Entity: Telephone Company
Transmittal Number : 29
COSA: INIAAN12

		Local Switching (M)	Equal Access (N)	SS7 (O)	Information (P)	Tandem Switching (Q)	Local Transport (R)
	Revenues						
100	Network Access	0	0	0	0	0	20,805,902
110	Uncollectibles	0	0	0	0	0	0
120	Common Line Support	0	n/a	n/a	n/a	n/a	n/a
130	Long Term	0	n/a	n/a	n/a	n/a	n/a
140	Transitional	0	n/a	n/a	n/a	n/a	n/a
150	Miscellaneous	0	0	0	0	0	23,148
160	Net Revenues	0	0	0	0	0	20,829,050
		---	---	---	---	---	---
	Expenses	---	---	---	---	---	---
170	Plant Specific	0	0	0	0	0	10,118,906
171	Network Support	0	0	0	0	0	0
172	General Support	0	0	0	0	0	943,253
173	Central Office	0	0	0	0	0	918,888
174	Operator Systems	0	0	0	0	0	0
175	COE Switching	0	0	0	0	0	918,888
176	COE Transmission	0	0	0	0	0	0
177	IOT	0	0	0	0	0	0
178	Cable & Wire Facilities	0	0	0	0	0	8,256,765
180	Plant Non-Sp. Less Dep/Amor	0	0	0	0	0	1,051,777
190	Depreciation / Amortization	0	0	0	0	0	3,751,194
200	Customer Operations	0	0	0	0	0	34,622
201	Marketing	0	0	0	0	0	0
202	Local Business Office	0	0	0	0	0	30,048
203	Revenue Accounting	0	0	0	0	0	4,451
204	Other Billing & Collection	0	0	0	0	0	123
210	Access	n/a	n/a	n/a	n/a	n/a	n/a
220	Corporate Operations	0	0	0	0	0	2,755,056
230	AFUDC	0	0	0	0	0	0
240	Other Exp. & Adjustments	0	0	0	0	0	2,532,694
250	Taxes Other than FIT	0	0	0	0	0	254,596
260	Total Exp and Other Taxes	0	0	0	0	0	20,498,845
		---	---	---	---	---	---
	FIT Adjustments	---	---	---	---	---	---
270	Adjustment for FIT	0	0	0	0	0	0
280	Amortized ITC	0	0	0	0	0	0
290	Federal Income Taxes	0	0	0	0	0	112,270
		---	---	---	---	---	---
300	Total Expenses & Taxes	0	0	0	0	0	20,611,115
		---	---	---	---	---	---
	Telephone Plant in Service	---	---	---	---	---	---
310	General Support	0	0	0	0	0	5,517,041
320	Central Office Equip-Switch	0	0	0	0	0	26,001,379
321	Operator Systems	0	0	0	0	0	0
322	Tandem Switching	0	0	0	0	0	0
323	Local Switching Cat. 3	0	0	0	0	0	0
324	Equal Access	0	0	0	0	0	26,001,379
330	Central Office Equip-Trans	0	0	0	0	0	0
331	Subscriber Lines	0	0	0	0	0	0
332	Exchange Circuit	0	0	0	0	0	0
333	Interexchange Circuit	0	0	0	0	0	0
334	Host Remote	0	0	0	0	0	0
340	Cable & Wire	0	0	0	0	0	0
341	Subscriber Lines	0	0	0	0	0	0
342	Exchange	0	0	0	0	0	0
343	Interexchange	0	0	0	0	0	0
344	Host Remote	0	0	0	0	0	0
350	Info Orig/Term Equipment	0	0	0	0	0	0
360	Amortizable Assets	0	0	0	0	0	949,856
370	Total Plant In Service	0	0	0	0	0	32,468,276
		---	---	---	---	---	---
	Adjustments to TPIS	---	---	---	---	---	---
380	Depr / Amor Reserve	0	0	0	0	0	29,139,514
390	Accum Deferred Income Tax	0	0	0	0	0	2,184,244
400	Other Rate Base Adjust.	0	0	0	0	0	851,742
		---	---	---	---	---	---
	Return Data	---	---	---	---	---	---
410	Average Rate Base	0	0	0	0	0	1,996,260
420	Return	0	0	0	0	0	217,935
430	Rate of Return	0.00%	0.00%	0.00%	0.00%	0.00%	10.92%

PUBLIC VERSION

COS-1(P)
Filing Date: 6/26/2012
Filing Entity: Telephone Company
Transmittal Number : 29
COSA: INIAAN12

		Host Remote (S)	Total Switched Traffic Sensitive (T)	Special Access (U)
	Revenues			
100	Network Access	0	20,805,902	0
110	Uncollectibles	0	0	0
120	Common Line Support	n/a	n/a	n/a
130	Long Term	n/a	n/a	n/a
140	Transitional	n/a	n/a	n/a
150	Miscellaneous	0	23,148	0
160	Net Revenues	0	20,829,050	0
		---	---	---
	Expenses	---	---	---
170	Plant Specific	0	10,118,906	0
171	Network Support	0	0	0
172	General Support	0	943,253	0
173	Central Office	0	918,888	0
174	Operator Systems	0	0	0
175	COE Switching	0	918,888	0
176	COE Transmission	0	0	0
177	IOT	0	0	0
178	Cable & Wire Facilities	0	8,256,765	0
180	Plant Non-Sp. Less Dep/Amor	0	1,051,777	0
190	Depreciation / Amortization	0	3,751,194	0
200	Customer Operations	0	34,622	0
201	Marketing	0	0	0
202	Local Business Office	0	30,048	0
203	Revenue Accounting	0	4,451	0
204	Other Billing & Collection	0	123	0
210	Access	n/a	n/a	n/a
220	Corporate Operations	0	2,755,056	0
230	AFUDC	0	0	0
240	Other Exp. & Adjustments	0	2,532,694	0
250	Taxes Other than FIT	0	254,596	0
260	Total Exp and Other Taxes	0	20,498,845	0
		---	---	---
	FIT Adjustments	---	---	---
270	Adjustment for FIT	0	0	0
280	Amortized ITC	0	0	0
290	Federal Income Taxes	0	112,270	0
		---	---	---
300	Total Expenses & Taxes	0	20,611,115	0
		---	---	---
	Telephone Plant in Service	---	---	---
310	General Support	0	5,517,041	0
320	Central Office Equip-Switch	0	26,001,379	0
321	Operator Systems	0	0	0
322	Tandem Switching	0	0	0
323	Local Switching Cat. 3	0	0	0
324	Equal Access	0	26,001,379	0
330	Central Office Equip-Trans	0	0	0
331	Subscriber Lines	0	0	0
332	Exchange Circuit	0	0	0
333	Interexchange Circuit	0	0	0
334	Host Remote	0	0	0
340	Cable & Wire	0	0	0
341	Subscriber Lines	0	0	0
342	Exchange	0	0	0
343	Interexchange	0	0	0
344	Host Remote	0	0	0
350	Info Orig/Term Equipment	0	0	0
360	Amortizable Assets	0	949,856	0
370	Total Plant In Service	0	32,468,276	0
		---	---	---
	Adjustments to TPIS	---	---	---
380	Depr / Amor Reserve	0	29,139,514	0
390	Accum Deferred Income Tax	0	2,184,244	0
400	Other Rate Base Adjust.	0	851,742	0
		---	---	---
	Return Data	---	---	---
410	Average Rate Base	0	1,996,260	0
420	Return	0	217,935	0
430	Rate of Return	0.00%	10.92%	0.00%

PUBLIC VERSION

COS-1(H)
Filing Date: 6/26/2012
Filing Entity: Telephone Company
Transmittal Number : 29
COSA: INIAAN12

Rate-of-Return TRP
Cost Analysis Summary
Historical, Calendar Year 2011

		Total Company (A)	Part 64 Adjustments (B)	Other Adjustments (C)	Subject to Separations (D)	Total Interstate (E)	Billing & Collection (F)
	Revenues						
100	Network Access	n/a	n/a	n/a	n/a	n/a	n/a
110	Uncollectibles	n/a	n/a	n/a	n/a	n/a	n/a
120	Common Line Support	n/a	n/a	n/a	n/a	n/a	n/a
130	Long Term	n/a	n/a	n/a	n/a	n/a	n/a
140	Transitional	n/a	n/a	n/a	n/a	n/a	n/a
150	Miscellaneous	n/a	n/a	n/a	n/a	n/a	n/a
160	Net Revenues	n/a	n/a	n/a	n/a	n/a	n/a
		----	----	----	----	----	----
	Expenses	----	----	----	----	----	----
170	Plant Specific	n/a	n/a	n/a	n/a	18,758,344	0
171	Network Support	0	0	0	0	0	0
172	General Support	1,502,192	0	0	1,502,192	1,302,594	0
173	Central Office	843,257	0	0	843,257	731,212	0
174	Operator Systems	0	0	0	0	0	0
175	COE Switching	843,257	0	0	843,257	731,212	0
176	COE Transmission	0	0	0	0	0	0
177	IOT	0	0	0	0	0	0
178	Cable & Wire Facilities	19,579,137	0	0	19,579,137	16,724,538	0
180	Plant Non-Sp. Less Dep/Amor	1,225,280	n/a	n/a	n/a	1,062,476	0
190	Depreciation / Amortization	4,184,653	0	0	4,184,653	3,628,632	0
200	Customer Operations	n/a	n/a	n/a	n/a	17,063	0
201	Marketing	0	0	0	0	0	0
202	Local Business Office	10,246	0	0	10,246	8,381	0
203	Revenue Accounting	17,326	0	0	17,326	8,663	0
204	Other Billing & Collection	29	0	0	29	19	0
210	Access	n/a	n/a	n/a	n/a	0	n/a
220	Corporate Operations	n/a	n/a	n/a	n/a	3,101,214	0
230	AFUDC	n/a	n/a	n/a	n/a	n/a	n/a
240	Other Exp. & Adjustments	n/a	n/a	n/a	n/a	3,612,568	0
250	Taxes Other than FIT	n/a	n/a	n/a	n/a	574,851	0
260	Total Exp and Other Taxes	n/a	n/a	n/a	n/a	30,755,148	0
		----	----	----	----	----	----
	FIT Adjustments	----	----	----	----	----	----
270	Adjustment for FIT	0	0	0	0	0	0
280	Amortized ITC	0	0	0	0	0	0
290	Federal Income Taxes	n/a	n/a	n/a	n/a	0	n/a
		----	----	----	----	----	----
300	Total Expenses & Taxes	n/a	n/a	n/a	n/a	30,755,148	n/a
		----	----	----	----	----	----
	Telephone Plant in Service	----	----	----	----	----	----
310	General Support	7,162,384	0	0	7,162,384	6,210,710	0
320	Central Office Equip-Switch	30,378,674	0	0	30,378,674	26,342,227	0
321	Operator Systems	0	0	0	0	0	0
322	Tandem Switching	0	0	0	0	0	0
323	Local Switching Cat. 3	0	0	0	0	0	0
324	Equal Access	30,378,674	0	0	30,378,674	26,342,227	0
330	Central Office Equip-Trans	0	0	0	0	0	0
331	Subscriber Lines	0	0	0	0	0	0
332	Exchange Circuit	0	0	0	0	0	0
333	Interexchange Circuit	0	0	0	0	0	0
334	Host Remote	0	0	0	0	0	0
340	Cable & Wire	0	0	0	0	0	0
341	Subscriber Lines	0	0	0	0	0	0
342	Exchange	0	0	0	0	0	0
343	Interexchange	0	0	0	0	0	0
344	Host Remote	0	0	0	0	0	0
350	Info Orig/Term Equipment	0	0	0	0	0	0
360	Amortizable Assets	1,496,894	0	0	1,496,894	1,297,999	0
370	Total Plant In Service	39,037,952	0	0	39,037,952	33,850,936	0
		----	----	----	----	----	----
	Adjustments to TPIS	----	----	----	----	----	----
380	Depr / Amor Reserve	32,433,711	0	0	32,433,711	28,124,207	0
390	Accum Deferred Income Tax	2,875,809	0	0	2,875,809	2,493,698	0
400	Other Rate Base Adjust.	n/a	n/a	n/a	n/a	1,269,119	0
		----	----	----	----	----	----
	Return Data	----	----	----	----	----	----
410	Average Rate Base	n/a	n/a	n/a	n/a	4,502,150	n/a
420	Return	n/a	n/a	n/a	n/a	n/a	n/a
430	Rate of Return	n/a	n/a	n/a	n/a	n/a	n/a

PUBLIC VERSION

COS-1(H)
Filing Date: **6/26/2012**
Filing Entity: **Telephone Company**
Transmittal Number : **29**
COSA: **INIAAN12**

		Interstate Inter-exchange (G)	ROR Regulated I/S Access (H)	Pay Phone (I)	Inside Wire (J)	BFP (K)	Total Common Line (L)
	Revenues						
100	Network Access	n/a	31,396,405	0	0	0	0
110	Uncollectibles	n/a	0	0	0	0	0
120	Common Line Support	n/a	0	0	0	0	0
130	Long Term	n/a	0	0	0	0	0
140	Transitional	n/a	0	0	0	0	0
150	Miscellaneous	n/a	23,464	0	0	0	0
160	Net Revenues	n/a	31,419,869	0	0	0	0
		---	---	---	---	---	---
	Expenses	---	---	---	---	---	---
170	Plant Specific	0	18,758,344	0	0	0	0
171	Network Support	0	0	0	0	0	0
172	General Support	0	1,302,594	0	0	0	0
173	Central Office	0	731,212	0	0	0	0
174	Operator Systems	0	0	0	0	0	0
175	COE Switching	0	731,212	0	0	0	0
176	COE Transmission	0	0	0	0	0	0
177	IOT	0	0	0	0	0	0
178	Cable & Wire Facilities	0	16,724,538	0	0	0	0
180	Plant Non-Sp. Less Dep/Amor	0	1,062,476	0	0	0	0
190	Depreciation / Amortization	0	3,628,632	0	0	0	0
200	Customer Operations	0	17,063	0	0	0	0
201	Marketing	0	0	0	0	0	0
202	Local Business Office	0	8,381	0	0	0	0
203	Revenue Accounting	0	8,663	0	0	0	0
204	Other Billing & Collection	0	19	0	0	0	0
210	Access	0	n/a	n/a	n/a	n/a	n/a
220	Corporate Operations	0	3,101,214	0	0	0	0
230	AFUDC	n/a	0	0	0	0	0
240	Other Exp. & Adjustments	0	3,612,568	0	0	0	0
250	Taxes Other than FIT	0	574,851	0	0	0	0
260	Total Exp and Other Taxes	0	30,755,148	0	0	0	0
		---	---	---	---	---	---
	FIT Adjustments	---	---	---	---	---	---
270	Adjustment for FIT	0	0	0	0	0	0
280	Amortized ITC	0	0	0	0	0	0
290	Federal Income Taxes	n/a	226,005	0	0	0	0
		---	---	---	---	---	---
300	Total Expenses & Taxes	n/a	30,981,153	0	0	0	0
		---	---	---	---	---	---
	Telephone Plant in Service	---	---	---	---	---	---
310	General Support	0	6,210,710	0	0	0	0
320	Central Office Equip-Switch	0	26,342,227	0	0	0	0
321	Operator Systems	0	0	0	0	0	0
322	Tandem Switching	0	0	0	0	0	0
323	Local Switching Cat. 3	0	0	0	0	0	0
324	Equal Access	0	26,342,227	0	0	0	0
330	Central Office Equip-Trans	0	0	0	0	0	0
331	Subscriber Lines	0	0	0	0	0	0
332	Exchange Circuit	0	0	0	0	0	0
333	Interexchange Circuit	0	0	0	0	0	0
334	Host Remote	0	0	0	0	0	0
340	Cable & Wire	0	0	0	0	0	0
341	Subscriber Lines	0	0	0	0	0	0
342	Exchange	0	0	0	0	0	0
343	Interexchange	0	0	0	0	0	0
344	Host Remote	0	0	0	0	0	0
350	Info Orig/Term Equipment	0	0	0	0	0	0
360	Amortizable Assets	0	1,297,999	0	0	0	0
370	Total Plant In Service	0	33,850,936	0	0	0	0
		---	---	---	---	---	---
	Adjustments to TPIS	---	---	---	---	---	---
380	Depr / Amor Reserve	0	28,124,207	0	0	0	0
390	Accum Deferred Income Tax	0	2,493,698	0	0	0	0
400	Other Rate Base Adjust.	0	1,269,119	0	0	0	0
		---	---	---	---	---	---
	Return Data	---	---	---	---	---	---
410	Average Rate Base	n/a	4,502,150	0	0	0	0
420	Return	n/a	438,716	0	0	0	0
430	Rate of Return	0.00%	9.74%	0.00%	0.00%	0.00%	0.00%

PUBLIC VERSION

COS-1(H)
Filing Date: 6/26/2012
Filing Entity: Telephone Company
Transmittal Number : 29
COSA: INIAAN12

		Local Switching (M)	Equal Access (N)	SS7 (O)	Information (P)	Tandem Switching (Q)	Local Transport (R)
	Revenues						
100	Network Access	0	0	0	0	0	31,396,405
110	Uncollectibles	0	0	0	0	0	0
120	Common Line Support	0	n/a	n/a	n/a	n/a	n/a
130	Long Term	0	n/a	n/a	n/a	n/a	n/a
140	Transitional	0	n/a	n/a	n/a	n/a	n/a
150	Miscellaneous	0	0	0	0	0	23,464
160	Net Revenues	0	0	0	0	0	31,419,869
		---	---	---	---	---	---
	Expenses	---	---	---	---	---	---
170	Plant Specific	0	0	0	0	0	18,758,344
171	Network Support	0	0	0	0	0	0
172	General Support	0	0	0	0	0	1,302,594
173	Central Office	0	0	0	0	0	731,212
174	Operator Systems	0	0	0	0	0	0
175	COE Switching	0	0	0	0	0	731,212
176	COE Transmission	0	0	0	0	0	0
177	IOT	0	0	0	0	0	0
178	Cable & Wire Facilities	0	0	0	0	0	16,724,538
180	Plant Non-Sp. Less Dep/Amor	0	0	0	0	0	1,062,476
190	Depreciation / Amortization	0	0	0	0	0	3,628,632
200	Customer Operations	0	0	0	0	0	17,063
201	Marketing	0	0	0	0	0	0
202	Local Business Office	0	0	0	0	0	8,381
203	Revenue Accounting	0	0	0	0	0	8,663
204	Other Billing & Collection	0	0	0	0	0	19
210	Access	n/a	n/a	n/a	n/a	n/a	n/a
220	Corporate Operations	0	0	0	0	0	3,101,214
230	AFUDC	0	0	0	0	0	0
240	Other Exp. & Adjustments	0	0	0	0	0	3,612,568
250	Taxes Other than FIT	0	0	0	0	0	574,851
260	Total Exp and Other Taxes	0	0	0	0	0	30,755,148
		---	---	---	---	---	---
	FIT Adjustments	---	---	---	---	---	---
270	Adjustment for FIT	0	0	0	0	0	0
280	Amortized ITC	0	0	0	0	0	0
290	Federal Income Taxes	0	0	0	0	0	226,005
		---	---	---	---	---	---
300	Total Expenses & Taxes	0	0	0	0	0	30,981,153
		---	---	---	---	---	---
	Telephone Plant in Service	---	---	---	---	---	---
310	General Support	0	0	0	0	0	6,210,710
320	Central Office Equip-Switch	0	0	0	0	0	26,342,227
321	Operator Systems	0	0	0	0	0	0
322	Tandem Switching	0	0	0	0	0	0
323	Local Switching Cat. 3	0	0	0	0	0	0
324	Equal Access	0	0	0	0	0	26,342,227
330	Central Office Equip-Trans	0	0	0	0	0	0
331	Subscriber Lines	0	0	0	0	0	0
332	Exchange Circuit	0	0	0	0	0	0
333	Interexchange Circuit	0	0	0	0	0	0
334	Host Remote	0	0	0	0	0	0
340	Cable & Wire	0	0	0	0	0	0
341	Subscriber Lines	0	0	0	0	0	0
342	Exchange	0	0	0	0	0	0
343	Interexchange	0	0	0	0	0	0
344	Host Remote	0	0	0	0	0	0
350	Info Orig/Term Equipment	0	0	0	0	0	0
360	Amortizable Assets	0	0	0	0	0	1,297,999
370	Total Plant In Service	0	0	0	0	0	33,850,936
		---	---	---	---	---	---
	Adjustments to TPIS	---	---	---	---	---	---
380	Depr / Amor Reserve	0	0	0	0	0	28,124,207
390	Accum Deferred Income Tax	0	0	0	0	0	2,493,698
400	Other Rate Base Adjust.	0	0	0	0	0	1,269,119
		---	---	---	---	---	---
	Return Data	---	---	---	---	---	---
410	Average Rate Base	0	0	0	0	0	4,502,150
420	Return	0	0	0	0	0	438,716
430	Rate of Return	0.00%	0.00%	0.00%	0.00%	0.00%	9.74%

PUBLIC VERSION

COS-1(H)
Filing Date: **6/26/2012**
Filing Entity: **Telephone Company**
Transmittal Number : **29**
COSA: **INIAAN12**

		Host Remote (S)	Total Switched Traffic Sensitive (T)	Special Access (U)
	Revenues			
100	Network Access	0	31,396,405	0
110	Uncollectibles	0	0	0
120	Common Line Support	n/a	n/a	n/a
130	Long Term	n/a	n/a	n/a
140	Transitional	n/a	n/a	n/a
150	Miscellaneous	0	23,464	0
160	Net Revenues	0	31,419,869	0
		---	---	---
	Expenses	---	---	---
170	Plant Specific	0	18,758,344	0
171	Network Support	0	0	0
172	General Support	0	1,302,594	0
173	Central Office	0	731,212	0
174	Operator Systems	0	0	0
175	COE Switching	0	731,212	0
176	COE Transmission	0	0	0
177	IOT	0	0	0
178	Cable & Wire Facilities	0	16,724,538	0
180	Plant Non-Sp. Less Dep/Amor	0	1,062,476	0
190	Depreciation / Amortization	0	3,628,632	0
200	Customer Operations	0	17,063	0
201	Marketing	0	0	0
202	Local Business Office	0	8,381	0
203	Revenue Accounting	0	8,663	0
204	Other Billing & Collection	0	19	0
210	Access	n/a	n/a	n/a
220	Corporate Operations	0	3,101,214	0
230	AFUDC	0	0	0
240	Other Exp. & Adjustments	0	3,612,568	0
250	Taxes Other than FIT	0	574,851	0
260	Total Exp and Other Taxes	0	30,755,148	0
		---	---	---
	FIT Adjustments	---	---	---
270	Adjustment for FIT	0	0	0
280	Amortized ITC	0	0	0
290	Federal Income Taxes	0	226,005	0
		---	---	---
300	Total Expenses & Taxes	0	30,981,153	0
		---	---	---
	Telephone Plant in Service	---	---	---
310	General Support	0	6,210,710	0
320	Central Office Equip-Switch	0	26,342,227	0
321	Operator Systems	0	0	0
322	Tandem Switching	0	0	0
323	Local Switching Cat. 3	0	0	0
324	Equal Access	0	26,342,227	0
330	Central Office Equip-Trans	0	0	0
331	Subscriber Lines	0	0	0
332	Exchange Circuit	0	0	0
333	Interexchange Circuit	0	0	0
334	Host Remote	0	0	0
340	Cable & Wire	0	0	0
341	Subscriber Lines	0	0	0
342	Exchange	0	0	0
343	Interexchange	0	0	0
344	Host Remote	0	0	0
350	Info Orig/Term Equipment	0	0	0
360	Amortizable Assets	0	1,297,999	0
370	Total Plant In Service	0	33,850,936	0
		---	---	---
	Adjustments to TPIS	---	---	---
380	Depr / Amor Reserve	0	28,124,207	0
390	Accum Deferred Income Tax	0	2,493,698	0
400	Other Rate Base Adjust.	0	1,269,119	0
		---	---	---
	Return Data	---	---	---
410	Average Rate Base	0	4,502,150	0
420	Return	0	438,716	0
430	Rate of Return	0.00%	9.74%	0.00%

PUBLIC VERSION

COS-2
Filing Date: 6/26/2012
Filing Entity: Telephone Company
Transmittal Number: 29
COSA: INIAAN12

Rate-of-Return TRP
7/12 - 6/13
Versus 2011 Actual

		Common Line (A)	Traffic Sensitive Switched (B)	Traffic Sensitive Special (C)	Other Interstate (D)	Total Interstate (E)	Total Co. Subject to Separations (F)
Forecast, 7/12 - 6/13							
	Revenue Requirement						
100	Depreciation/Amortization	0	3,751,194	0	0	3,751,194	4,335,520
105	Expense Less Dep & Amor	0	16,493,055	0	0	20,244,249	n/a
110	Taxes Less FIT	0	254,596	0	0	n/a	n/a
115	Return	0	217,935	0	n/a	n/a	n/a
120	FIT	0	112,270	0	n/a	n/a	n/a
125	Uncol., IDC & Other Adj.	0	0	0	n/a	n/a	n/a
130	Revenue Requirement	0	20,829,050	0	n/a	n/a	n/a
135	Access Service Revenue	0	20,829,050	0	n/a	n/a	n/a
		---	---	---	---	---	---
	Rate Base	---	---	---	---	---	---
140	Telephone Plant in Service	0	32,468,276	0	0	32,468,276	37,525,873
145	Rate Base Adjustments	0	851,742	0	0	851,742	n/a
150	Depreciation Reserves	0	29,139,514	0	0	29,139,514	33,678,589
155	Accum Deferred Income Tax	0	2,184,244	0	0	2,184,244	2,524,485
160	Average Rate Base	0	1,996,260	0	0	1,996,260	n/a
Actual, 1/11- 12/11							
	Revenue Requirement						
200	Depreciation/Amortization	0	3,628,632	0	0	3,628,632	4,184,653
205	Expense Less Dep & Amor	0	26,551,665	0	0	26,551,665	n/a
210	Taxes Less FIT	0	574,851	0	0	n/a	n/a
215	Return	0	438,716	0	n/a	n/a	n/a
220	FIT	0	226,005	0	n/a	n/a	n/a
225	Uncol., IDC & Other Adj.	0	0	0	n/a	n/a	n/a
230	Revenue Requirement	0	31,419,869	0	n/a	n/a	n/a
235	Access Service Revenue	0	31,419,869	0	n/a	n/a	n/a
		---	---	---	---	---	---
	Rate Base	---	---	---	---	---	---
240	Telephone Plant in Service	0	33,850,936	0	0	33,850,936	39,037,952
245	Rate Base Adjustments	0	1,269,119	0	0	1,269,119	n/a
250	Depreciation Reserves	0	28,124,207	0	0	28,124,207	32,433,711
255	Accum Deferred Income Tax	0	2,493,698	0	0	2,493,698	2,875,809
260	Average Rate Base	0	4,502,150	0	0	4,502,150	n/a

PUBLIC VERSION

COS-2
Filing Date: 6/26/2012
Filing Entity: Telephone Company
Transmittal Number: 29
COSA: INIAAN12

Rate-of-Return TRP
7/12 - 6/13
Versus 2011 Actual

		Common Line (A)	Traffic Sensitive Switched (B)	Traffic Sensitive Special (C)	Other Interstate (D)	Total Interstate (E)	Total Co. Subject to Separations (F)
Forecast, 7/11 - 6/12							
	Revenue Requirement						
100	Depreciation/Amortization	0	4,306,713	0	0	4,306,713	5,011,589
105	Expense Less Dep & Amor	0	22,522,475	0	0	22,522,475	n/a
110	Taxes Less FIT	0	324,104	0	0	n/a	n/a
115	Return	0	732,360	0	0	n/a	n/a
120	FIT	0	377,276	0	0	n/a	n/a
125	Uncol., IDC & Other Adj.	0	0	0	0	n/a	n/a
130	Revenue Requirement	0	28,262,928	0	0	n/a	n/a
135	Access Service Revenue	0	28,262,928	0	0	n/a	n/a
		---	---	---	---	---	---
	Rate Base	---	---	---	---	---	---
140	Telephone Plant in Service	0	33,172,547	0	0	33,172,547	38,906,390
145	Rate Base Adjustments	0	1,324,916	0	0	1,324,916	n/a
150	Depreciation Reserves	0	25,634,772	0	0	25,634,772	29,830,396
155	Accum Deferred Income Tax	0	2,352,822	0	0	2,352,822	2,737,907
160	Average Rate Base	0	6,509,869	0	0	6,509,869	n/a
Actual, 1/10 - 12/10							
	Revenue Requirement						
200	Depreciation/Amortization	0	3,389,736	0	0	3,389,736	4,027,230
205	Expense Less Dep & Amor	0	26,190,942	0	0	26,190,942	n/a
210	Taxes Less FIT	0	307,679	0	0	307,679	n/a
215	Return	0	608,769	0	0	608,769	n/a
220	FIT	0	313,609	0	0	313,609	n/a
225	Uncol., IDC & Other Adj.	0	0	0	0	0	n/a
230	Revenue Requirement	0	30,810,735	0	0	30,810,735	n/a
235	Access Service Revenue	0	30,810,735	0	0	n/a	n/a
		---	---	---	---	---	---
	Rate Base	---	---	---	---	---	---
240	Telephone Plant in Service	0	33,971,435	0	0	33,971,435	40,360,318
245	Rate Base Adjustments	0	1,273,100	0	0	1,273,100	n/a
250	Depreciation Reserves	0	26,263,522	0	0	26,263,522	31,202,806
255	Accum Deferred Income Tax	0	2,394,721	0	0	2,394,721	2,845,087
260	Average Rate Base	0	6,586,292	0	0	6,586,292	n/a

PUBLIC VERSION

COS-2
Filing Date: 6/26/2012
Filing Entity: Telephone Company
Transmittal Number: 29
COSA: INIAAN12

Rate-of-Return TRP
7/12 - 6/13
Versus 2011 Actual

		Common Line (A)	Traffic Sensitive Switched (B)	Traffic Sensitive Special (C)	Other Interstate (D)	Total Interstate (E)	Total Co. Subject to Separations (F)
Forecast, 7/10 - 6/11							
	Revenue Requirement						
100	Depreciation/Amortization	0	3,504,047	0	0	3,504,047	4,211,191
105	Expense Less Dep & Amor	0	23,536,753	0	0	0	n/a
110	Taxes Less FIT	0	346,313	0	0	n/a	n/a
115	Return	0	772,231	0	0	n/a	n/a
120	FIT	0	397,816	0	0	n/a	n/a
125	Uncol., IDC & Other Adj.	0	0	0	0	n/a	n/a
130	Revenue Requirement	0	28,557,160	0	0	n/a	n/a
135	Access Service Revenue	0	28,557,160	0	0	n/a	n/a
		----	----	----	----	----	----
	Rate Base	----	----	----	----	----	----
140	Telephone Plant in Service	0	36,170,229	0	0	36,170,229	43,469,664
145	Rate Base Adjustments	0	1,010,060	0	0	1,010,060	n/a
150	Depreciation Reserves	0	27,572,924	0	0	27,572,924	33,137,357
155	Accum Deferred Income Tax	0	2,072,405	0	0	2,072,405	2,490,632
160	Average Rate Base	0	7,534,960	0	0	7,534,960	n/a
Actual, 1/09 - 12/09							
	Revenue Requirement						
200	Depreciation/Amortization	0	2,699,028	0	0	2,699,028	3,371,420
205	Expense Less Dep & Amor	0	22,793,220	0	0	22,793,220	n/a
210	Taxes Less FIT	0	343,489	0	0	343,489	n/a
215	Return	0	(904,622)	0	0	(904,622)	n/a
220	FIT	0	(466,018)	0	0	(466,018)	n/a
225	Uncol., IDC & Other Adj.	0	0	0	0	0	n/a
230	Revenue Requirement	0	24,465,097	0	0	24,465,097	n/a
235	Access Service Revenue	0	24,465,095	0	n/a	n/a	n/a
		----	----	----	----	----	----
	Rate Base	----	----	----	----	----	----
240	Telephone Plant in Service	0	32,888,752	0	0	32,888,752	41,082,143
245	Rate Base Adjustments	0	912,096	0	0	912,096	n/a
250	Depreciation Reserves	0	23,382,628	0	0	23,382,628	29,207,811
255	Accum Deferred Income Tax	0	2,026,871	0	0	2,026,871	2,531,813
260	Average Rate Base	0	8,391,349	0	0	8,391,349	n/a

PUBLIC VERSION

MAG-1
Filing Date: **6/26/2012**
Filing Entity: **Telephone Company**
Transmittal Number : **29**
COSA: **INIAAN12**

Rate-of Return TRP
MAG Adjustments
Test Year, 7/12 to 6/13

Access Element	Interstate Revenue Requirement Prior to Adjustments (A) Note 1	Frozen Line Port Transfer (B) Note 2	Universal Service Fund Contribution (C) Note 3	Frozen TIC Revenue (D) Note 4	Interstate Revenue Requirement Subject to TIC Re-allocation (E) Cols. (A)+(B)+(C)+(D)	Frozen TIC Re-allocation (F) Note 5	Interstate Revenue Requirement Subject to Rate Making (G)
Carrier Common Line	$0		$0		$0		$0
Local Switching	$0				$0		$0
Information	$0				$0		$0
Transport	$20,805,902			$0	$20,805,902		$20,805,902
Special Access	$0				$0		$0
Total	**$20,805,902**	**$0**	**$0**	**$0**	**$20,805,902**	**$0**	**$20,805,902**

Note 1: Source of Revenue Requirements Column (A)
Carrier Common Line **TRP COS-1(P) Line 100, Column (L)**
Local Switching **TRP COS-1(P) Line 100, Column (M)**
Information **TRP COS-1(P) Line 100, Column (P)**
Transport **TRP COS-1(P) Line 100, Column (QS**
Special Access **TRP COS-1(P) Line 100, Column U**
Note 2: Enter amounts equal to the amounts on the most recently filed Form MAG-1.
The Local Switching amount is a negative number. The Carrier Common Line amount is a positive number.
Note 3: Projected Amount per Account 6540
Note 4: Enter an amount equal to the amount on the most recently filed Form MAG-1.
Note 5: Enter an amount equal to the amount on the most recently filed Form MAG-1.

PUBLIC VERSION

REV-1
Filing Date: 6/26/2012
Filing Entity: Telephone Company
Transmittal Number: 29
COSA: INIAAN12

Rate-of-Return TRP
Switched Access Revenue
Test Year, 7/12 to 6/13

		Minute or Message Rate (A)	Minute Miles Rate (B)	Line or Trunk Rate (C)	Minute or Message Demand (D)	Minute Miles Demand (E)	Line or Trunk Demand (F)	Access Revenue (G)	Revenue Requirement (H)
	Common Line								
100	Multi-line Business EUCL	n/a	n/a	0.00	n/a	n/a	0	0	n/a
110	Single Line Business EUCL	n/a	n/a	0.00	n/a	n/a	0	0	n/a
120	Residential EUCL	n/a	n/a	0.00	n/a	n/a	0	0	n/a
130	Special Access Surcharge	n/a	n/a	0.00	n/a	n/a	0	0	n/a
140	Terminating CCL Premium	0.000000	n/a	n/a	0	n/a	n/a	0	n/a
150	Terminating CCL Non-Prem.	0.000000	n/a	n/a	0	n/a	n/a	0	n/a
160	Originating CCL Premium	0.000000	n/a	n/a	0	n/a	n/a	0	n/a
170	Originating CCL Non-Prem.	0.000000	n/a	n/a	0	n/a	n/a	0	n/a
180	Common Line - - Total	n/a	n/a	n/a	n/a	n/a	n/a	0	0
	Information	----	----	----	----	----	----	----	----
190	Directory Assistance	0.000000	n/a	n/a	0	n/a	n/a	0	n/a
200	White Page Surcharge Prem.	0.000000	n/a	n/a	0	n/a	n/a	0	n/a
210	White Pg. Surcharge Non-Prem.	0.000000	n/a	n/a	0	n/a	n/a	0	n/a
220	Other Information	n/a	n/a	n/a	n/a	n/a	n/a	n/a	n/a
230	Information - - Total	n/a	n/a	n/a	n/a	n/a	n/a	n/a	0
	Local Switching	----	----	----	----	----	----	----	----
240	Premium	0.000000	n/a	n/a	0	n/a	n/a	0	n/a
250	Non-Premium	0.000000	n/a	n/a	0	n/a	n/a	0	n/a
260	Equal Access	n/a	n/a	n/a	n/a	n/a	n/a	n/a	n/a
270	Switching - - Total	n/a	n/a	n/a	n/a	n/a	n/a	n/a	0
	Local Transport	----	----	----	----	----	----	----	----
280	Premium LT Term.	0.006230	n/a	n/a	3,339,631,164	n/a	n/a	20,805,902	n/a
290	Non-Prem. LT Term	0.000000	n/a	n/a	0	n/a	n/a	0	n/a
300	Premium LT Facility	n/a	0.000000	n/a	n/a	0	n/a	0	n/a
310	Non-Prem. LT Facility	n/a	0.000000	n/a	n/a	0	n/a	0	n/a
320	Tandem Switching	0.000000	n/a	n/a	0	n/a	n/a	0	n/a
330	TST Termination	0.000000	n/a	n/a	0	n/a	n/a	0	n/a
340	TST Facility	n/a	0.000000	n/a	n/a	0	n/a	0	n/a
350	Premium Interconnection	0.000000	n/a	n/a	0	n/a	n/a	0	n/a
360	Non-Prem. Interconnection	0.000000	n/a	n/a	0	n/a	n/a	0	n/a
370	Installation NRC per Trunk	n/a	n/a	0.00	n/a	n/a	0	0	0

PUBLIC VERSION

REV-1
Filing Date: 6/26/2012
Filing Entity: Telephone Company
Transmittal Number: 29
COSA: INIAAN12

Rate-of-Return TRP
Switched Access Revenue
Test Year, 7/12 to 6/13

	Local Transport (Cont.)	Termination Rate (A)	Circuit Rate (B)	Mileage Rate (C)	Termination Demand (D)	Circuit Demand (E)	Mileage Demand (F)	Access Revenue (G)	Revenue Requirement (H)
380	DS3 Entrance Facility	n/a	0	n/a	n/a	0	n/a	0	n/a
390	DS3 Direct Term.	0.00	n/a	n/a	0	n/a	n/a	0	n/a
400	DS3 Direct Facility	n/a	n/a	0.00	n/a	n/a	0	0	n/a
410	DS1 Entrance Facility	n/a	0	n/a	n/a	0	n/a	0	n/a
420	DS1 Direct Term.	0	n/a	n/a	0	n/a	n/a	0	n/a
430	DS1 Direct Facility	n/a	n/a	0.00	n/a	n/a	0	0	n/a
440	VG Entrance Facility	n/a	0.00	n/a	n/a	0	n/a	0	n/a
450	VG Direct Term.	0.00	n/a	n/a	0	n/a	n/a	0	n/a
460	VG Direct Facility	n/a	n/a	0.00	n/a	n/a	0	0	n/a
470	Other Transport	n/a	n/a	n/a	n/a	n/a	n/a	23,148	n/a
480	Local Transport - - Total	n/a	n/a	n/a	n/a	n/a	n/a	20,829,050	n/a
	Special - - Voice Grade	----	----	----	----	----	----	----	----
490	2-Wire Chan. Term.	n/a	0	n/a	n/a	0	n/a	0	n/a
500	4-Wire Chan. Term.	n/a	0	n/a	n/a	0	n/a	0	n/a
510	Channel Mileage Term.	0	n/a	n/a	0	n/a	n/a	0	n/a
520	Channel Mileage Facility	n/a	n/a	0.00	n/a	n/a	0	0	n/a
530	Non-Recurring	n/a	0	n/a	n/a	0	n/a	0	n/a
	Special - - High Capacity	----	----	----	----	----	----	----	----
540	High Capacity Chan. Term.	n/a	0	n/a	n/a	0	n/a	0	n/a
550	Channel Mileage Term.	0	n/a	n/a	0	n/a	n/a	0	n/a
560	Channel Mileage Facility	n/a	n/a	0.00	n/a	n/a	0	0	n/a
570	Non-Recurring	n/a	0	n/a	n/a	0	n/a	0	n/a
580	Special Access - - Total	n/a	n/a	n/a	n/a	n/a	n/a	0	0

Notes: A composite special access NRC should be used if the installation rates vary among the services. If the company does not file a particular rate, then the rate and demand = 0. Col. G equals Cols. (A x D) + (B x E) + (C x F).

PUBLIC VERSION

REV-2
Filing Date: 6/26/2012
Filing Entity: Telephone Company
Transmittal Number: 29
COSA: INIAAN12

Rate-of-Return TRP
Revenues Summary
Test Year, 7/12 to 6/13

		Total Network Access (A)	Recurring without ICB (B)	Non-Recurring without ICB (C)	ICB (D)
100	Carrier Common Line	0	0	0	0
110	Special Access	0	0	0	0
120	Local Switching	0	0	0	0
130	Equal Access	0	0	0	0
140	Information	0	0	0	0
150	Local Transport	20,829,050	20,805,902	23,148	0
160	Total TS - Switched	20,829,050	20,805,902	23,148	0

Notes : Col. A = Cols. B + C + D. If a particular category is inapplicable, then that category equals O.

PUBLIC VERSION

RTE-1
Filing Date: 6/26/2012
Filing Entity: Telephone Company
Transmittal Number: 29
COSA: INIAAN12

Rate-of-Return TRP
Percent Change in
Historical Rate Levels

		7/1/2011 Rate (A)	Current Effective Rate (B)	Proposed 7/1/2012 Rate (C)	% Change 7/1/2011 7/1/2012 (D)	% Change Current 7/1/2012 (E)
	Switched Access					
100	Premium CCL Term. ($/MOU)	0.00000000	0.00000000	0.00000000	0.00%	0.00%
		----	----	----	----	----
110	N.P. CCL Term. ($/MOU)	0.00000000	0.00000000	0.00000000	0.00%	0.00%
		----	----	----	----	----
120	Premium Switching ($/MOU)	0.00000000	0.00000000	0.00000000	0.00%	0.00%
		----	----	----	----	----
130	N.P. Switching ($/MOU)	0.00000000	0.00000000	0.00000000	0.00%	0.00%
		----	----	----	----	----
140	Equal Access	0.00000000	0.00000000	0.00000000	0.00%	0.00%
		----	----	----	----	----
	End User Common Line	----	----	----	----	----
150	Multi-line Business ($/Month)	0	0.00	0.00	0.00%	0.00%
		----	----	----	----	----
160	Residential & Single Line Bus.	0	0.00	0.00	0.00%	0.00%

PUBLIC VERSION

RTE-1
Filing Date: 6/26/2012
Filing Entity: Telephone Company
Transmittal Number: 29
COSA: INIAAN12

Rate-of-Return TRP
Percent Change in
Historical Rate Levels

	Local Transport Rates	7/1/2011 Rate (A)	Current Effective Rate (B)	Proposed 7/1/2012 Rate (C)	% Change 7/1/2011 7/1/2012 (D)	% Change Current 7/1/2012 (E)
170	Prem. LT ($/MOU, Avg. Mileage)	0.00819000	0.00819000	0.00623000	-23.93%	-23.93%
		----	----	----	----	----
180	N.P. LT ($/MOU, Avg. Mileage)	0.00000000	0.00000000	0.00000000	0.00%	0.00%
		----	----	----	----	----
190	DS1 Entr. Facility ($/Circuit)	0	0.00	0.00	0.00%	0.00%
		----	----	----	----	----
200	DS1 Direct Trunk ($/Circuit)	0	0.00	0.00	0.00%	0.00%
		----	----	----	----	----
210	Tdm Sw. Transport (($/Circuit)	0	0.00	0.00	0.00%	0.00%
		----	----	----	----	----
220	Tdm. Switching ($/Tdm. MOU)	0.000000	0.000000	0.000000	0.00%	0.00%
		----	----	----	----	----
230	Prem. Interconnection ($/MOU)	0.000000	0.000000	0.000000	0.00%	0.00%
		----	----	----	----	----
240	N.P. Interconnection ($/MOU)	0.000000	0.000000	0.000000	0.00%	0.00%
		----	----	----	----	----
250	NRC ($/Tk. Or Tks. Activated)	0.00	0.00	0.00	0.00%	0.00%
		----	----	----	----	----
260	2-Wire VG ($/Cir., Avg. Mileage)	0.00	0.00	0.00	0.00%	0.00%
		----	----	----	----	----
270	4-Wire VG ($/Cir., Avg. Mileage)	0.00	0.00	0.00	0.00%	0.00%

Notes: If Lines 170 & 180 or any other entry is inapplicable, then that rate = 0.

PUBLIC VERSION

RTE-2
Filing Date: 6/26/2012
Filing Entity: Telephone Company
Transmittal Number: 29
COSA: INIAAN12

Rate-of-Return
Revenue Price-outs
Using 2011 Demand

	Switched Access	Revenue at 7/1/2011 Rates (A)	Revenue at Current Rate (B)	Change in Revenue, Cols. B-A (C)	Revenue at 7/1/2012 Rates (D)	Change in Revenue, Cols. D-B (E)
100	Multi-line Business	0	0	0	0	0
		---	---	---	---	---
110	Residential & Single Line Bus.	0	0	0	0	0
		---	---	---	---	---
120	Carrier Common Line	0	0	0	0	0
		---	---	---	---	---
130	Special Access	0	0	0	0	0
		---	---	---	---	---
140	Local Switching	0	0	0	0	0
		---	---	---	---	---
150	Equal Access	0	0	0	0	0
		---	---	---	---	---
160	Information	0	0	0	0	0
		---	---	---	---	---
170	Local Transport	27,375,043	27,375,043	0	20,829,050	(6,545,993)

Notes: If company belongs to the NECA common line pool, then revenue = 0.

PUBLIC VERSION

RTE-3
Filing Date: **6/26/2012**
Filing Entity: **Telephone Company**
Transmittal Number: **29**
COSA: **INIAAN12**

Rate-of-Return TRP
COSA's for which Rates are Averaged or Pooled

COSA	Multi-line Business (A)	Residential & Single Line Business (B)	Carrier Common Line (C)
100			
110			
120			
130			
140			
150			
160			
170			
180			
190			
200			
210			
220			
230			

Notes: Companies should list all COSA's which are averaged or pooled.

PUBLIC VERSION

RTE-3
Filing Date: **6/26/2012**
Filing Entity: **Telephone (**
Transmittal Number: **29**
COSA: **INIAAN12**

Rate-of-Return TRP
COSA's for Which Rates
are Averaged or Pooled

COSA	Local Switching (D)	Local Transport (E)	Information (F)	Equal Access (G)	Special Access (H)
100					
110					
120					
130					
140					
150					
160					
170					
180					
190					
200					
210					
220					
230					

Notes: Companies should list all
COSA's which are avera

PUBLIC VERSION

DMD-1
Filing Date: 6/26/2012
Filing Entity: Telephone Company
Transmittal Number: 29
COSA: INIAAN12
Page

Rate-of-Return TRP
Traffic Sensitive
Minutes-of-Use

	Historical	Premium Local Switching (A)	Non-Premium Local Switching (B)	Total Local Switching (C)	Total Chargeable Switching (D)	Total Tandem Switching* (E)	Tandem Switching Transport ** (F)
100	1st Qtr. 2008	0	0	0	0	0	462,642,762
110	2nd Qtr. 2008	0	0	0	0	0	494,506,220
120	3rd Qtr. 2008	0	0	0	0	0	587,375,504
130	4th Qtr. 2008	0	0	0	0	0	626,529,936
140	1st Qtr. 2009	0	0	0	0	0	685,314,359
150	2nd Qtr. 2009	0	0	0	0	0	723,798,568
160	3rd Qtr. 2009	0	0	0	0	0	761,152,928
170	4th Qtr. 2009	0	0	0	0	0	812,004,085
180	1st Qtr. 2010	0	0	0	0	0	955,256,222
190	2nd Qtr. 2010	0	0	0	0	0	855,496,278
200	3rd Qtr. 2010	0	0	0	0	0	920,662,690
210	4th Qtr. 2010	0	0	0	0	0	948,391,562
		---	---	---	---	---	---
220	Pycos Year, 1/11-12/11	0	0	0	0	0	3,833,504,867
		---	---	---	---	---	---
230	Test Year, 7/12-6/13	0	0	0	0	0	3,339,631,164

Notes: Local switching MOU are the same as the billable units for the interconnection charge.
* Refers to the MOU switched at a company tandem, as discussed in Part 69. 11(f-g).
** Refers to the MOU carried over non-dedicated trunks; i.e., tandem switched transport or common trunks.

PUBLIC VERSION

DMD-2
Filing Date: 6/26/2012
Filing Entity: Telephone Company
Transmittal Number: 29
COSA: INIAAN12

Rate-of-Return TRP
Special Access
Demand

	1/11 - 12/11 Channel Terminations (A)	1/11/- 12/11 Number of Circuits (B)	1/11 - 12/11 Interoffice Miles (C)	7/12 - 6/13 Channel Terminations (D)	7/12 - 6/13 Number of Circuits (E)	7/12 - 6/13 Interoffice Miles (F)
100 Metallic	0	0	0	0	0	0
110 Telegraph	0	0	0	0	0	0
120 VG less WATS	0	0	0	0	0	0
130 WATS	0	0	0	0	0	0
140 full-time Audio	0	0	0	0	0	0
150 High Capacity	0	0	0	0	0	0

PUBLIC VERSION

DMD-3
Filing Date: 6/26/2012
Filing Entity: Telephone Company
Transmittal Number: 29
COSA: INIAAN12

Rate-of-Return TRP
Common Line
Revenue and Demand

		1/11-12/11 Historical Revenue (A)	1/11-12/11 Historical MOU or Lines (B)	7/12 - 6/13 Test Year Revenue (C)	7/12 - 6/13 Test Year MOU or Lines (D)
100	End User Common Line, Total	0	0	0	0
110	Residential	0	0	0	0
120	Single Line Business	0	0	0	0
130	Multi-line Business	0	0	0	0
140	Special Access Surcharge	0	0	0	0
160	Total Common Line Revenue	0	n/a	0	n/a

PUBLIC VERSION

DMD-4
Filing Date: **6/26/2012**
Filing Entity: **Telephone Company**
Transmittal Number: **29**
COSA: **INIAAN12**

Rate-of-Return TRP
Minutes-of-Use
Historical vs. Forecast

			Traffic Sensitive MOU
100	Test Year	7/12 - 6/13	3,339,631,164
110	Pycos Year,	1/11-12/11	3,833,504,867

120	Test Year	7/11- 6/12	3,450,907,011
130	Pycos Year,	1/10 - 12/10	3,679,806,752

140	Test Year	7/10 - 6/11	3,481,819,561
150	Pycos Year,	1/09 - 12/09	2,982,269,940

160	Test Year	7/09 - 6/10	2,970,603,151
170	Pycos Year,	1/08 - 12/08	2,171,054,422

Notes: Actual operating statistics should be reported for the PYCOS years.
These data should be consistent with those in Chart DMD-4 in previous TRPs.
If a forecast was not reported for any particular test year, then enter 0.

PUBLIC VERSION

DMD-5
Filing Date: 6/26/2012
Filing Entity: Telephone Company
Transmittal Number: 29
COSA: INIAAN12

Rate-of-Return TRP
Demand
Direct Trunked Transport

		1/11-12/11 VG (A)	1/11-12/11 DSI (B)	1/11-12/11 DS3 (C)	Test Year 7/12 - 6/13 VG (D)	Test Year 7/12 - 6/13 DS1 (E)	Test Year 7/12 - 6/13 DS3 (F)
100	Entrance Facility	0.00	0.00	0.00	0.00	0.00	0.00
110	Direct Trunked Transport	0.00	0.00	0.00	0.00	0.00	0.00

Notes: Demand should be annualized and reflect application of the percent interstate usage factor (PIU).

PUBLIC VERSION

ERN-1
Filing Date: 6/26/2012
Filing Entity: Telephone Company
Transmittal Number: 29
COSA: INIAAN12

Rate-of-Return TRP
Rate-of-Return
Summary

		2009/2010 FCC Monitoring Period (A)	2011 Calendar Year (B)	7/12 - 6/13 Test Year (C)
100	Interstate Access, Total	-2.00%	9.74%	n/a
110	Carrier Common Line	0.00%	0.00%	0.00%
120	Special Access	0.00%	0.00%	0.00%
130	Local Switching	0.00%	0.00%	n/a
140	Information	0.00%	0.00%	n/a
150	Local Transport	-2.00%	9.74%	n/a
160	Traffic Sensitive Switched, Total	-2.00%	9.74%	n/a

PUBLIC VERSION

BSF-1

Filing Entity:	**Telephone Company**		**Rate-of-Return TRP**
Filing Date:	**6/26/2012**		**Base Study Factor**
Transmittal Number:	**29**		
COSA:	**INIAAN12**		

		Actual 2007 (A)	Actual 2008 (B)	Actual 2009 (C)	Actual 2010 (D)	Actual 2011 (E)	Prospective 2013 (F)
	Relative MOU's - Tandem Switching						
100	Interstate	-	-	-	-	-	-
110	Total Company	-	-	-	-	-	-
120	IS Factor	0.0000%	0.0000%	0.0000%	0.0000%	0.0000%	0.0000%
	Host/Remote MOU's						
130	Interstate	-	-	-	-	-	-
140	Total Company	-	-	-	-	-	-
150	IS Factor	0.0000%	0.0000%	0.0000%	0.0000%	0.0000%	0.0000%
	Host/Remote MOU Miles						
160	Interstate	-	-	-	-	-	-
170	Total Company	-	-	-	-	-	-
180	IS Factor	0.0000%	0.0000%	0.0000%	0.0000%	0.0000%	0.0000%
	Conversation Minutes						
190	Interstate	1,844,725,157	2,171,054,422	2,982,269,940	3,679,806,752	3,833,504,867	3,339,631,164
200	Total Company	3,769,513,569	3,511,079,888	3,854,587,574	4,498,543,861	4,535,675,135	3,961,855,832
210	IS Factor	48.9380%	61.8344%	77.3694%	81.8000%	84.5189%	84.2946%
	Conversation Minute Miles (000's)						
220	Interstate	237,595,577	252,814,009	121,349,856	149,762,759	224,101,394	196,794,311
230	Total Company	488,553,782	376,460,878	154,906,296	181,370,670	262,351,997	232,499,043
240	IS Factor	48.6324%	67.1555%	78.3376%	82.5728%	85.4201%	84.6431%

The above Base Study Factors apportion on the following investment:

	Part 32 Account	Part 36 Category
Relative MOU's-Tandem Switching	2210	COE Cat. 3
Host/Remote MOU's	2230	COE Cat. 4.3
Host/Remote MOU Miles	2410	C&WF Cat. 4
Conversation Minutes	2230	COE Cat. 4.23
Conversation Minutes Miles	2410	C&WF Cat. 3

PUBLIC VERSION

RORDEM-1
Filing Date: 6/26/2012
Filing Entity: Telephone Company
Transmittal Number: 29
COSA: INIAAN12

Rate-of-Return TRP
Verification of WDEM

Year	Interstate DEM MOU (A)	Intrastate DEM MOU (B)	Local DEM MOU (C)	Total DEM MOU (D)	Interstate MDEM Factor (E)	No. of Switched Access Lines (F)	Part 36.125(e) Historical Weighting (G)	Interstate WDEM Factor (H)
2004	-	-	-	-	0.0000%	-	0	0.0000%
2005	-	-	-	-	0.0000%	-	0	0.0000%
2006	-	-	-	-	0.0000%	-	0	0.0000%
2007	-	-	-	-	0.0000%	-	0	0.0000%
2008	-	-	-	-	0.0000%	-	0	0.0000%
2009	-	-	-	-	0.0000%	-	0	0.0000%
2010	-	-	-	-	0.0000%	-	0	0.0000%

CERTIFICATION

I certify that I am the Chief Financial Officer of Iowa Network Services, Inc., have overall responsibility for the preparation of the 2012 Annual Access Charge Tariff Filing, and am authorized to execute this certification. Based upon information provided to me by employees or outside accountants responsible for the preparation of, or for supervision of the preparation of, the data submitted in support of the rates contained in the proposed tariff, I hereby certify that the data have been examined and reviewed and are true, correct and complete.

June 26, 2012
Date

Dennis M. Creveling
Dennis M. Creveling
IOWA NETWORK SERVICES, INC.

IOWA NETWORK ACCESS DIVISION

TARIFF F.C.C. NO. 1
25th Revised Page 1
Cancels 24rd Revised Page 1

CENTRALIZED EQUAL ACCESS SERVICE

CHECK SHEET

Title Page 1 and Page 1 to 188 and Supplement No. 7, inclusive, of this tariff are effective as of the date shown. Original and revised pages as named below contain all changes from the original tariff that are in effect on the date hereof.

Page	Number of Revision Except as Indicated	Page	Number of Revision Except as Indicated	Page	Number of Revision Except as Indicated	Page	Number of Revision Except as Indicated
1*	25th	28	1st	54	Original	79	Original
1.1*	10th	29	1st	55	Original	80	Original
2	1st	30	Original	56	1st	81	Original
3	Original	31	Original	57	Original	82	Original
4	1st	32	Original	58	1st	83	2nd
5	3rd	33	1st	59	1st	84	1st
6	3rd	34	Original	60	Original	85	1st
7	1st	35	Original	61	3rd	86	2nd
8	1st	36	Original	61.1	Original	87	1st
9	Original	37	2nd	62	1st	87.1	Original
10	1st	38	1st	63	3rd	88	4th
11	2nd	39	3rd	63.1	1st	88.1	Original
12	2nd	40	3rd	64	1st	88.2	Original
13	6th	40.1	Original	64.1	2nd	89	4th
13.1	1st	41	Original	65	2nd	89.1	1st
14	1st	42	1st	66	Original	89.2	1st
15	1st	43	3rd	67	Original	89.3	1st
16	2nd	43.1	Original	68	Original	89.4	1st
17	Original	44	Original	69	1st	90	2nd
18	Original	45	1st	69.1	1st	91	Original
19	1st	46	1st	70	Original	92	2nd
20	1st	46.1	Original	71	Original	93	2nd
21	2nd	47	Original	72	3rd	94	1st
21.1	1st	48	Original	72.1	1st	95	1st
22	Original	49	Original	73	1st	96	1st
23	Original	50	1st	74	Original	97	1st
24	Original	51	2nd	75	Original	98	1st
25	Original	52	2nd	76	1st		
26	Original	53	2nd	77	Original		
27	Original	53.1	Original	78	1st		

* New or Revised page

IOWA NETWORK ACCESS DIVISION

TARIFF F.C.C. NO. 1
10th Revised Page 1.1
Cancels 9th Revised Page 1.1

CENTRALIZED EQUAL ACCESS SERVICE

CHECK SHEET

Title Page 1 and Page 1 to 188 and Supplement No. 7, inclusive, of this tariff are effective as of the date shown. Original and revised pages as named below contain all changes from the original tariff that are in effect on the date hereof.

Page	Number of Revision Except as Indicated	Page	Number of Revision Except as Indicated	Page	Number of Revision Except as Indicated	Page	Number of Revision Except as Indicated
99	1st	123	Original	147	1st	172	Original
100	1st	124	1st	147.1	Original	173	1st
101	1st	125	1st	148	3rd	174	1st
102	Original	126	Original	149	3rd	175	Original
103	Original	127	Original	149.1	Original	176	Original
104	2nd	128	Original	150	3rd	177	1st
105	1st	129	1st	151	3rd	178	1st
105.1	1st	129.1	1st	151.1	1st	179	Original
105.2	1st	130	1st	152	2nd	180	1st
105.3	Original	131	Original	153	3rd	181	1st
106	Original	132	2nd	153.1	1st	182	Original
107	Original	133	Original	154	2nd	183	Original
108	2nd	134	1st	155	3rd	184	Original
109	Original	135	1st	156	2nd	185	Original
110	Original	136	2nd	157	Original	186	Original
111	Original	136.1	2nd	158	Original	187	Original
112	1st	136.1.1	Original	159	Original	188	Original
113	1st	136.2	1st	160	Original		
114	1st	137	1st	161	Original		
115	1st	138	2nd	162	Original		
116	1st	139	1st	163	Original		
117	Original	140	2nd	164	Original		
118	1st	140.1	Original	165	Original		
118.1	Original	141	1st	166	Original		
119	1st	142	3rd	167	Original		
120	1st	143	Original	168	Original		
120.1	2nd	144	Original	169	Original		
121	1st	145*	11th	170	Original		
122	Original	146	Original	171	Original		

* New or Revised page

Issued: June 26, 2012

Effective: July 3, 2012

4201 Corporate Drive
West Des Moines, Iowa 50266-5906

CENTRALIZED EQUAL ACCESS SERVICE

6. Switched Access Service (Cont'd)

6.8 Rates and Charges

6.8.1 Switched Transport

(A) Rate

	Rate Per Access Minute	
	$ 0.00623	(R)

	Rate Per Call Blocked
(B) Network Blocking Charge +	$ 0.0070

(C) Nonrecurring Charges

(1) Installation

	Rate Per Trunk
Activation of the first trunk or SNAC contained in the order	$ 514.68
Activation of each additional trunk or SNAC contained in an order	$ 12.55

(2) Interim NXX Translation

	Rate Per Order
Activation or deactivation of the first NXX code contained in an order	$ 213.70
Activation or deactivation of each additional NXX code contained in an order	$ 23.81

+Applies to FGD