Exhibit 54

INS Iowa Tariff (Iowa State Utilities Board) No. 1 (dated Dec. 2, 1988)

Access Service Tariff No. 1

PUBLIC VERSION

IOWA TARIFF NO. 1
ACCESS SERVICE

RPU- 88-2

Original Title Page

Iowa Network Services, Inc.

Telephone Tariff

Filed With

Iowa State Utilities Board

December 2, 1988

REGULATIONS, RATES AND CHARGES APPLYING TO

THE PROVISION OF ACCESS SERVICES FOR

CONNECTION TO INTRASTATE COMMUNICATIONS FACILITIES

FOR CUSTOMERS WITHIN THE

OPERATING TERRITORY OF

IOWA NETWORK SERVICES, INC.

as defined herein

Issued: December 2, 1988 Effective: JAN 1 1989

By: William P. Bagley
General Manager
Suite 140
2700 Westown Parkway
West Des Moines, Iowa 50265

PUBLIC VERSION

IOWA TARIFF NO. 1
ACCESS SERVICE

TF- 92-401

Iowa Network Services, Inc. Telephone Tariff
Filed with the Board

5th Revised Page 1
Cancels 4th Revised Page 1

TARIFF LIBRARY
UTILITIES DIVISION

CHECK SHEET

Title Page 1 and Pages 1 to 271 inclusive of this tariff are effective as of the date shown. Original and revised pages as named below contain all changes from the original tariff that are in effect on the date hereof.

Page	Number of Revision Except as Indicated	Page	Number of Revision Except as Indicated	Page	Number of Revision Except as Indicated
1	5th*	120	2nd	166	1st
1.1	Original*	121	1st	167	1st*
5	1st*	121.1	Original	170.1	Original
7	2nd*	130	1st	172	1st
8	1st*	135	1st*	173	1st*
9	2nd*	136	1st	174	1st
10	2nd	138	1st	177	1st
11	1st	139	2nd	178	1st
12	1st	139.1	1st	179	1st
14	1st*	140	1st	184	1st
15	1st*	141	3rd*	186	1st
[illegible]	2nd*	142	2nd	188	1st
[illegible]	1st*	143	2nd*	189	1st
18	1st*	143.1	Original*	189.1	Original
19	1st*	143.2	Original*	190	2nd*
20	1st*	143.3	Original*	190.1	Original*
51	1st	143.4	Original*	191	2nd*
52	1st	144	1st	193	1st
56	1st	145	1st	203	1st
62	1st*	146	1st	204	1st
72	1st	147	2nd*	205	1st
81	1st*	148	1st	206	1st
92	1st*	152	1st	207	1st
92.1	Original*	154	2nd*	208	1st
96	2nd*	155	2nd*	209	1st
96.1	1st*	158	1st	210	1st
97	1st*	162	1st	211	1st
97.1	Original*	163	1st	212	1st
118	1st*	164	1st	213	1st
118.1	Original*	165	1st	214	1st

* New or revised page
\# Corrected page

[illegible]sued: November 16, 1992 Effective: DEC 16 1992

By: William P. Bagley
General Manager
4201 Corporate Drive
West Des Moines, Iowa 50266

TF - 92-401

IOWA TARIFF NO. 1
ACCESS SERVICE

Iowa Network Services, Inc. Telephone Tariff
Filed with the Board

Original Page 1.1

CHECK SHEET

TARIFF LIBRARY
UTILITIES DIVISION

Title Page 1 and Pages 1 to 271 inclusive of this tariff are effective as of the date shown. Original and revised pages as named below contain all changes from the original tariff that are in effect on the date hereof.

Page	Number of Revision Except as Indicated	Page	Number of Revision Except as Indicated	Page	Number of Revision Except as Indicated
215	1st				
216	1st				
217	1st				
218	1st				
219	1st				
221	1st				
222	2nd*				
225	3rd*				
227	1st				
228	1st				
229	1st				
230	1st				
231	1st				
232	1st				
233	1st				
234	1st				
235	1st				
236	1st				
237	1st				
238	1st				
239	1st				
257	1st*				
258	1st*				
262	1st				
263	1st				
265	1st				
266	1st				
267	1st				

* New or revised page

Issued: November 16, 1992 Effective: DEC 16 1992

By: William P. Bagley
General Manager
4201 Corporate Drive
West Des Moines, Iowa 50266

RPU- 88-2

IOWA TARIFF NO. 1
ACCESS SERVICE

Iowa Network Services, Inc. Telephone Tariff
Filed with the Board

TABLE OF CONTENTS

		Page No.
	CHECK SHEET	1
	CONCURRING CARRIERS	14
	CONNECTING CARRIERS	14
	OTHER PARTICIPATING CARRIERS	14
	REGISTERED SERVICE MARKS/REGISTERED TRADEMARKS	14
	EXPLANATION OF SYMBOLS	15
	EXPLANATION OF ABBREVIATIONS	15
	REFERENCE TO TECHNICAL PUBLICATIONS	18
1.	APPLICATION OF TARIFF	20
2.	GENERAL REGULATIONS	21
	2.1 Undertaking of Iowa Network	21
	2.1.1 Scope	21
	2.1.2 Limitations	21
	2.1.3 Liability	23
	2.1.4 Provision of Services	26
	2.1.5 Installation and Termination of Services	26
	2.1.6 Maintenance of Services	27
	2.1.7 Changes and Substitutions	28
	2.1.8 Refusal and Discontinuance of Service	29
	2.1.9 Engineering	32
	2.1.10 Notification of Service-Affecting Activities	37
	2.1.11 Coordination with Respect to Network Contingencies	37

By: William P. Bagley
General Manager
Suite 140
2700 Westown Parkway
West Des Moines, Iowa 50265

KPU- 88-2

IOWA TARIFF NO. 1
ACCESS SERVICE

Iowa Network Services, Inc. Telephone Tariff
Filed with the Board

TABLE OF CONTENTS (Cont'd)

		Page No.
2.	GENERAL REGULATIONS (Cont'd)	
2.1	Undertaking of Iowa Network (Cont'd)	
2.1.12	Provision and Ownership of Telephone Numbers	38
2.1.13	Safety	38
2.1.14	Held Applications	40
2.1.15	Customer Information	40
2.1.16	Customer Complaints	41
2.2	Use	43
2.2.1	Reserved for Future Use	43
2.2.2	Interference or Impairment	43
2.2.3	Unlawful Use	44
2.3	Obligations of the Customer	45
2.3.1	Damages	45
2.3.2	Ownership of Facilities and Theft	45
2.3.3	Interconnection	45
2.3.4	Reserved for Future Use	46
2.3.5	Reserved for Future Use	46
2.3.6	Availability for Testing	46
2.3.7	Balance	46
2.3.8	Design of Customer Services	46
2.3.9	References to Iowa Network	47
2.3.10	Reserved for Future Use	47
2.3.11	Claims and Demands for Damages	47
2.3.12	Reserved for Future Use	48
2.3.13	Coordination with Respect to Network Contingencies	49
2.3.14	Jurisdictional Report Requirements	49
2.3.15	Determination of Intrastate Rates and Charges for Mixed Interstate and Intrastate Access Service	55
2.3.16	Reserved for Future Use	56

By: William P. Bagley
General Manager
Suite 140
2700 Westown Parkway
West Des Moines, Iowa 50265

RPU- 88-2

IOWA TARIFF NO. 1
ACCESS SERVICE

Iowa Network Services, Inc. Telephone Tariff
Filed with the Board

TABLE OF CONTENTS (Cont'd)

		Page No.
2.	GENERAL REGULATIONS (Cont'd)	
2.4	Payment Arrangements and Credit Allowances	57
2.4.1	Payment of Rates, Charges and Deposits	57
2.4.2	Minimum Periods	69
2.4.3	Cancellation of an Order for Service	70
2.4.4	Credit Allowance for Service Interruptions	70
2.4.5	Reserved for Future Use	73
2.4.6	Reserved for Future Use	73
2.4.7	Title or Ownership Rights	73
2.4.8	Rating and Billing of Access Services Provided by Iowa Network and Participating Telephone Companies	74
2.5	Connections	76
2.5.1	General	76
2.5.2	Reserved for Future Use	76
2.6	Definitions	77
	Access Code	77
	Access Minutes	77
	Access Tandem	77
	Ancillary Service or Equipment	78
	Answer/Disconnect Supervision	78
	Attenuation Distortion	78
	Average Busy-Season, Busy-Hour Traffic	78
	Balance (100 Type) Test Line	78
	Bit	79
	Board	79
	Business Day	79
	Busy-Hour	79
	Busy Hour Minutes of Capacity (BHMC)	79
	Busy-Season	80

Issued: December 2, 1988 Effective: JAN 1 1989

By: William P. Bagley
General Manager
Suite 140
2700 Westown Parkway
West Des Moines, Iowa 50265

TABLE OF CONTENTS (Cont'd)

TARIFF LIBRARY
UTILITIES DIVISION

Page No.

2. GENERAL REGULATIONS (Cont'd)

2.6 Definitions (Cont'd)

Calls	80	
CCS	80	
Central Office	80	
Central Office Prefix	80	
Channel	81	
Channelize	81	
C-Message Noise	81	
C-Notched Noise	81	
Common Channel Signaling Access Network (CCSAN)	81	(N)
Communications System	81	
Customer(s)	82	
Data Transmission (107 Type) Test Line	82	
Decibel	82	
Decibel Reference Noise C-Message Weighting	82	
Decibel Reference Noise C-Message Referenced to 0	82	
Delinquent or Delinquency	83	
Detail Billing	83	
Disconnect	83	
Due Date	83	
Echo Control	83	
Echo Path Loss	83	
Echo Return Loss	84	
End Office Switch	84	
End User	84	
Entry Switch	84	
Envelope Delay Distortion	84	
Equal Level Echo Path Loss	85	
Exchange	85	
Exchange Service	85	
Exchange Service Area or Exchange Area	85	
Exchange Telephone Company	85	
Expected Measured Loss	86	

TABLE OF CONTENTS (Cont'd)

Page No.

2. GENERAL REGULATIONS (Cont'd)

2.6 Definitions (Cont'd)

Field Identifier	86
First Come - First Served	86
First Point of Switching	86
Former Account	87
Frequency Shift	87
Grandfathered	87
Held Order for Service	87
Home	87
Host Office	87
Immediately Available Funds	88
Impedance Balance	88
Impulse Noise	88
Inactive Account	88
Individual Case Basis	88
Inserted Connection Loss	89
Interexchange Carrier (IC) or Interexchange Common Carrier	89
Interexchange Service	89
Interexchange Utility	89
Intermodulation Distortion	90
Interstate Communications	90
Intrastate Access Services	90
Intrastate Communications	90
Line-Side Connection	90
Local Access and Transport Area	91
Local Exchange Utility	91
Local Service	91
Local Tandem Switch	91
Loop Around Test Line	91
Loss Deviation	92
Major Fraction Thereof	92
Message	92
Milliwatt (102 Type) Test Line	92

TABLE OF CONTENTS (Cont'd)

TARIFF LIBRARY
UTILITIES DIVISION

	Page No.	
2. GENERAL REGULATIONS (Cont'd)		
2.6 Definitions (Cont'd)		
Minnesota Equal Access Network Services, Inc. (MEANS)	92	(N)
Minnesota Independent Equal Access Corp. (MIEAC)	92.1	(N)
Network Control Signaling	92.1	(T)
Nonsynchronous Test Line	93	
North American Numbering Plan	93	
Off-Hook	93	
On-Hook	93	
Open Circuit Test Line	93	
Originating Direction	94	
Outside Plant	94	
Participating Telephone Company	94	
Pay Telephone	94	
Percentage of Fill	94	
Phase Jitter	95	
Point of Interconnection	95	
Premises	95	
Remote Switching Modules and/or Remote Switching Systems	95	
Return Loss	95	
Registered Equipment	96	
Service Access Code	96	
Service Control Point (SCP)	96	(N)
Service Switching Point (SSP)	96	(N)
Serving Wire Center	96	
Seven Digit Manual Test Line	96.1	(T)
Shortage of Facilities or Equipment	96.1	
Short Circuit Test Line	96.1	
Signaling Network Access Connection (SNAC)	96.1	(N)
Signaling Point of Interconnection (SPOI)	96.1	
Signal Point (SP)	97	(N)
Signal-To-C-Notched Noise Ratio	97	
Signal Transfer Point (STP)	97	(N)
Singing Return Loss	97	
Subtending End Office of an Access Tandem	97	

Certain regulations previously found on this page can now be found on 1st Revised Page 8.

Issued: November 16, 1992 Effective: DEC 16 1992

By: William P. Bagley
General Manager
4201 Corporate Drive
West Des Moines, Iowa 50266

TF - 92-401

TABLE OF CONTENTS (Cont'd)

TARIFF LIBRARY
UTILITIES DIVISION

	Page No.	
2. GENERAL REGULATIONS (Cont'd)		
2.6 Definitions (Cont'd)		
Suspend	97	(M)
Switching Service	97.1	(T)
Synchronous Test Line	97.1	(T)
Tariff	98	
Telephone Utility or Utility	98	
Terminating Direction	98	
Timely Payment	98	(M)
Toll Connecting Trunks	98	
Toll Message	99	
Toll Rate	99	
Toll Station	99	
Toll Station Service	99	
Traffic	99	
Traffic Grade of Service	99	
Transmission Measuring (105 Type) Test Line/Responder	100	
Transmission Path	100	
Transmission Service	100	
Trouble Report	100	
Trunk	100	
Trunk Group	101	
Trunk-Side Connection	101	
Two-Wire to Four-Wire Conversion	101	
V and H Coordinates Method	101	
Wire Center	101	
3. SERVICES NOT CURRENTLY OFFERED BY IOWA NETWORK UNDER THIS TARIFF	102	
4. RECORDING	103	

Certain regulations found on this page formerly appeared on Original Page 7.

Certain regulations previously found on this page can now be found on 2nd Revised Page 9.

TARIFF LIBRARY
UTILITIES DIVISION

TABLE OF CONTENTS (Cont'd)

		Page No.	
5.	ORDERING OPTIONS FOR SWITCHED ACCESS SERVICE	117	(M)
5.1	General	117	
5.1.1	Ordering Conditions	117	
5.1.2	Provision of Other Services	118	
5.1.3	Reserved for Future Use	119	(M)
5.2	Access Order	120	
5.2.1	Access Order Service Date Intervals	122	
5.2.2	Rates and Charges Associated with Access Ordering	124	
5.2.3	Cancellation of an Access Order	132	
5.2.4	Selection of Facilities for Access Orders	134	
5.2.5	Minimum Period	135	
5.2.6	Minimum Period Charges	136	
5.2.7	Reserved for Future Use	136	
5.3	Available Inventory	137	
5.4	Access Orders for Services Provided by Iowa Network and Exchange Telephone Companies	138	
6.	SWITCHED ACCESS SERVICE	140	
6.1	General	140	
6.1.1	Access Service Arrangements and Manner of Provision	140	
6.1.2	Reserved for Future Use	147	
6.1.3	Rate Categories	147	
6.1.4	Design Layout Report	156	
6.1.5	Acceptance Testing	156	
6.1.6	Routine Testing	156	
6.1.7	Ordering Options and Conditions	157	

Certain regulations found on this page formerly appeared on Original Page 8.

Iowa Network Services, Inc. Telephone Tariff
Filed with the Board

2nd Revised Page 10
Cancels 1st Revised Page 10

TABLE OF CONTENTS (Cont'd)

TARIFF LIBRARY
UTILITIES DIVISION

6. SWITCHED ACCESS SERVICE (Cont'd)

6.2 Provision and Description of Switched Access Service Feature Groups 158

6.2.1 Reserved For Future Use 158
6.2.2 Feature Group B (FGB) 158
6.2.3 Reserved for Future Use 162 (C)
6.2.4 Feature Group D (FGD) 167

6.3 Reserved for Future Use 173

6.4 Transmission Specifications 174

6.4.1 Standard Transmission Specifications 174
6.4.2 Data Transmission Parameters 179

6.5 Obligations of Iowa Network 183

6.5.1 Network Management 183
6.5.2 Design and Traffic Routing of Switched Access Service 183
6.5.3 Provision of Service Performance Data 184
6.5.4 Trunk Group Measurement Reports 185
6.5.5 Determination of Number of Transmission Paths 185
6.5.6 Reserved for Future Use 186
6.5.7 Design Blocking Probability 186

6.6 Obligations of the Customer 188

6.6 1 Report Requirements 188
6.6.2 Supervisory Signaling 189
6.6.3 Trunk Group Measurement Reports 189
6.6.4 Design of Switched Access Services 189
6.6.5 Short Duration Mass Calling Requirements 189

TARIFF LIBRARY
UTILITIES DIVISION

TABLE OF CONTENTS (Cont'd)

Page No.

6. SWITCHED ACCESS SERVICE (Cont'd)

6.7 Rate Regulations 190

6.7.1 Description and Application of Rates and Charges 190
6.7.2 Minimum Period 215
6.7.3 Reserved for Future Use 215
6.7.4 Reserved for Future Use 215
6.7.5 Change of Feature Group Type 215
6.7.6 Mileage Measurement 215
6.7.7 Measuring Access Minutes 217
6.7.8 Network Blocking Rate for Feature Group D 223
6.7.9 Reserved for Future Use 224
6.7.10 Reserved for Future Use 224
6.7.11 Reserved for Future Use 224
6.7.12 Reserved for Future Use 224
6.7.13 Reserved for Future Use 224

6.8 Rates and Charges 225

6.8.1 Centralized Equal Access Service 225
6.8.2 Network Blocking 225
6.8.3 Switched Transport 225
6.8.4 Interim NXX Translation 225 (T)

7. RESERVED FOR FUTURE USE 226

8. CUSTOMER'S POINT OF INTERCONNECTION INFORMATION 227

8.1 General Information 227
8.2 Customer's Point of Interconnection 227

9. PARTICIPATING TELEPHONE COMPANIES 229

9.1 Exchanges and Localities 229

TABLE OF CONTENTS (Cont'd)

		Page No.	
10.	RESERVED FOR FUTURE USE	239	(C)
11.	RESERVED FOR FUTURE USE	240	
12.	RESERVED FOR FUTURE USE	241	
13.	ADDITIONAL ENGINEERING, ADDITIONAL LABOR AND MISCELLANEOUS SERVICES	242	
13.1	Additional Engineering	243	
13.1.1	Rates for Additional Engineering	243	
13.2	Additional Labor	245	
13.2.1	Overtime Installation	245	
13.2.2	Overtime Repair	245	
13.2.3	Stand By	245	
13.2.4	Testing and Maintenance with Exchange Telephone Companies	245	
13.2.5	Other Labor	246	
13.2.6	Rates for Additional Labor	246	
13.3	Miscellaneous Services	249	
13.3.1	Maintenance of Service	249	
13.3.2	Reserved for Future Use	250	
13.3.3	Reserved for Future Use	250	
13.3.4	Testing Services	250	
13.3.5	Provision of Access Service Billing Information	257	
13.3.6	Reserved for Future Use	258	

TABLE OF CONTENTS (Cont'd)

		Page No.
14.	RESERVED FOR FUTURE USE	259
15.	INTERFACE GROUPS, TRANSMISSION SPECIFICATIONS AND CHANNEL INTERFACES	260
15.1	Switched Transport Interface Groups	260
15.1.1	Reserved for Future Use	260
15.1.2	Reserved for Future Use	260
15.1.3	Reserved for Future Use	260
15.1.4	Reserved for Future Use	260
15.1.5	Reserved for Future Use	260
15.1.6	Interface Group 6	260
15.1.7	Reserved for Future Use	261
15.1.8	Reserved for Future Use	261
15.1.9	Reserved for Future Use	261
15.1.10	Reserved for Future Use	261
15.1.11	Available Interface Codes	262
15.1.12	Supervisory Signaling	262
15.2	Transmission Specification Switched Access Service	263
15.2.1	Standard Transmission Specifications	263
15.2.2	Data Transmission Parameters	267
15.3	Reserved for Future Use	271
15.4	Reserved for Future Use	271

TF - 92-401

IOWA TARIFF NO. 1
ACCESS SERVICE

Iowa Network Services, Inc. Telephone Tariff
Filed with the Board

1st Revised Page 14
Cancels Original Page 14

CONCURRING CARRIERS

NO CONCURRING CARRIERS

TARIFF LIBRARY
UTILITIES DIVISION

CONNECTING CARRIERS

NO CONNECTING CARRIERS

OTHER PARTICIPATING CARRIERS

MINNESOTA INDEPENDENT EQUAL ACCESS CORPORATION (C)

Plymouth, Minnesota (C)

REGISTERED SERVICE MARKS	REGISTERED TRADEMARKS
NONE	NONE

Issued: November 16, 1992 Effective: DEC 16 1992

By: William P. Bagley
General Manager
4201 Corporate Drive
West Des Moines, Iowa 50266

TARIFF LIBRARY
UTILITIES DIVISION

EXPLANATION OF SYMBOLS

(C)	-	To signify changed regulation	
(D)	-	To signify discontinued rate or regulation	
(I)	-	To signify increase	
(M)	-	To signify matter relocated without change	(N)
(N)	-	To signify new rate or regulation	
(R)	-	To signify reduction	
(S)	-	To signify reissued matter	(N)
(T)	-	To signify a change in text but no change in rate or regulation	
(Z)	-	To signify a correction	(N)

EXPLANATION OF ABBREVIATIONS

ac	-	Alternating current	
ACM	-	Address Complete Message	(N)
AML	-	Actual Measured Loss	
ANI	-	Automatic Number Identification	
AP	-	Program Audio	
AT&T-C	-	AT&T Communications	
BD	-	Business Day	
BHMC	-	Busy Hour Minutes of Capacity	
CAROT	-	Centralized Automatic Reporting on Trunks	
CCS	-	Common Channel Signaling	(N)
CCSA	-	Common Channel Signaling Access	
CCSAN	-	Common Channel Signaling Access Network	(N)
CI	-	Changes Interface	
CO	-	Central Office	
COCTX	-	Central Office Centrex	
COE	-	Central Office Equipment	
Cont'd	-	Continued	
CPE	-	Customer Provided Equipment	
Ctx	-	Centrex	
DA	-	Directory Assistance	
dB	-	decibel	
dBrnC	-	Decibel Reference Noise C-Message Weighting	
dBrnCO	-	Decibel Reference Noise C-Message Weighted O	
dBv	-	Decibel(s) Relative to 1 Volt (reference)	
dBvl	-	Decibel(s) Relating to 1 Volt (reference)	
dc	-	direct current	
DDD	-	Direct Distance Dialing	
EDD	-	Envelope Delay Distortion	
ELEPL	-	Equal Level Echo Path Loss	
EML	-	Expected Measured Loss	

TF - 92-401

Iowa Network Services, Inc. Telephone Tariff
Filed with the Board

2nd Revised Page 16
Cancels 1st Revised Page 16

EXPLANATION OF ABBREVIATIONS (Cont'd)

TARIFF LIBRARY
UTILITIES DIVISION

EPL	-	Echo Path Loss	
ERL	-	Echo Return Loss	
ESS	-	Electronic Switching System	
ESSX	-	Electronic Switching System Exchange	
EXM	-	Exit Message	(N)
F	-	frequency	
FID	-	Field Identifier	
F.C.C.	-	Federal Communications Commission	
FX	-	Foreign Exchange	
HC	-	High Capacity	
Hz	-	Hertz	
IC	-	Interexchange Carrier	
ICB	-	Individual Case Basis	
ICL	-	Inserted Connection Loss	
kbps	-	kilobits per second	
kHz	-	kilohertz	
LATA	-	Local Access and Transport Area	
LIDB	-	Line Information Data Base	(N)
Ma	-	milliamperes	
Mbps	-	Megabits per second	
MEANS	-	Minnesota Equal Access Network Services, Inc.	(N)
MHz	-	Megahertz	
MMUC	-	Minimum Monthly Usage Charge	
MRC	-	Monthly Recurring Charge	
MT	-	Metallic	
MTS	-	Message Telecommunications Service(s)	
NPA	-	Numbering Plan Area	
NRC	-	Nonrecurring Charge	
NTS	-	Non-Traffic Sensitive	
NXX	-	Three-Digit Central Office Code	
OTPL	-	Zero Transmission Level Point	
PBX	-	Private Branch Exchange	
PCM	-	Pulse Code Modulation	
PLR	-	Private Line Ringdown	
POT	-	Point of Termination	
PTC	-	Participating Telephone Company	
RMS	-	Root-Mean-Square	
RSM	-	Remote Switching Modules	
RSS	-	Remote Switching Systems	
SAC	-	Service Access Code	

Certain regulations previously found on this page can now be found on 1st Revised Page 17.

Issued: November 16, 1992 Effective: DEC 16 1992

By: William P. Bagley
General Manager
4201 Corporate Drive
West Des Moines, Iowa 50266

EXPLANATION OF ABBREVIATIONS (Cont'd)

TARIFF LIBRARY
UTILITIES DIVISION

SCP	-	Service Control Point	(N)
SNAC	-	Signaling Network Access Connection	
SPOI	-	Signaling Point of Interconnection	(N)
SRL	-	Singing Return Loss	(M)
SS7	-	Signaling System 7	(N)
SSN	-	Switched Service Network	(M)
SSP	-	Service Switching Point	(N)
STP	-	Signal Transfer Point	(N)
SWC	-	Serving Wire Center	(M)
TES	-	Telephone Exchange Service(s)	
TG	-	Telegraph Grade	
TLP	-	Transmission Level Point	
TSPS	-	Traffic Service Position System	
TTP	-	Toll Transfer Point	(N)
TV	-	Television	
USOC	-	Uniform Service Order Code	
VG	-	Voice Grade	
V&H	-	Vertical & Horizontal	
WATS	-	Wide Area Telecommunications Service(s)	

Certain regulations found on this page formerly appeared on 1st Revised Page 16.

TARIFF LIBRARY
UTILITIES DIVISION

REFERENCE TO TECHNICAL PUBLICATIONS

The following technical publications are referenced in this tariff and may be obtained from Bell Communications Research, Inc., Distribution Storage Center, 60 New England Ave., Piscataway, NJ 08854.

Technical Reference:

Multiple Exchange Carrier Access Billing (MECAB) Guidelines
Issued: December, 1991 Available: December, 1991 (C)

Multiple Exchange Carrier Ordering and Design (MECOD) Guidelines
Issued: September, 1990 Available: September, 1990 (C)

PUB 41451 High Capacity Terrestrial Digital Service
Issued: January, 1983 Available: May 17, 1983

PUB 41004 Data Communications Using Voiceband Private Line Channels
Issued: October, 1973 Available: October, 1973

PUB 62310 Digital Data System Channel Interface Specification
Issued: September, 1983 Available: October, 1983

PUB 62411 High Capacity Digital Service Channel Interface Specification
Issued: September, 1983 Addendum: October, 1984 (C)

TR-NWT-000334, Issue 2 Voice Grade Switched Access Service - Transmission Parameters (C)
Issued: September, 1990 Available: September, 1990

TR-TSY-000335, Issue 2 Voice Grade Special Access - Transmission Parameter Limits and Interface Combinations
Issued: May, 1990 Available: May, 1990 (C)

TR-NPL-000336, Metallic and Telegraph Grade Special Access Services
Issued: October, 1987

TR-NPL-000338, Television Special Access and Local Channel Services
Issued: December, 1986

TARIFF LIBRARY
UTILITIES DIVISION

REFERENCE TO TECHNICAL PUBLICATIONS (Cont'd)

Technical Reference (Cont'd)

TR-NWT-000394 (N)
Issued: August, 1991 Available: August, 1991

TR-TSV-000905
Issued: July, 1989 Available: July, 1989

TR-TSV-000954
Issued: December, 1990 Available: December, 1990 (N)

TR-NPL-000337, Program Audio Special Access Service and Local Channel Services (C)
Issued: July, 1987 Available: September, 1987 (C)

(D)
(D)

TR-NPL-000341, Digital Data Special Access Service - Transmission Parameters and Interface Combinations (C)
Issued: March, 1989 Available: March, 1989

TR-TSH-000342, High Capacity Digital Special Access Service
Issued: February, 1991 Available: February, 1991 (C)

The following technical publication is referenced in this tariff and may be obtained from the Bell Communications Technical Education Center, Room B02, 6200 Route 53, Lisle, IL 60532

Telecommunications Transmission Engineering
Volume 3 - Networks and Services (Chapters 6 and 7)
Second Edition, 1980
Issued: June, 1980 Available: June, 1980

The following technical publication is referenced in this tariff and may be obtained from the National Exchange Carrier Association, Inc., Director - Tariff and Regulatory Matters, 100 South Jefferson Road, Whippany, NJ 07981 and the Federal Communications Commission's commercial contractor.

PUB AS No. 1, Issue II, Access Service
Issued: May, 1984 Available: May, 1984
Addendum: March, 1987 Available: March, 1987

1. Application of Tariff

1.1 This tariff contains regulations, rates and charges applicable to the provision of Switched Access Services and other miscellaneous services, hereinafter referred to collectively as service(s), provided by Iowa Network Services, Inc., hereinafter referred to as Iowa Network, to customers.

1.2 The provision of such services by Iowa Network as set forth in this tariff does not constitute a joint undertaking with the customer or the Participating Telephone Companies for the furnishing of any service.

Switched access services provided under this tariff covers only the use of Iowa Network's central access tandem and the switched transport between an Iowa Network premises and such central access tandem, and the use of the Iowa Network/MEANS Common Channel Signaling Access Network. End office switches served by Iowa Network's central access tandem are operated by the appropriate Participating Telephone Company. Therefore, any switched access services ordered under this tariff must be used with a like switched access service ordered by a Participating Telephone Company and other Exchange Telephone Companies, where applicable, or vice versa. (C) | (C)

2. General Regulations

2.1 Undertaking of Iowa Network

2.1.1 Scope

(A) Reserved for Future Use

(B) Iowa Network does not undertake to transmit messages under this tariff.

(C) Iowa Network shall be responsible only for the installation, operation and maintenance of the services it provides.

(D) Iowa Network will, for maintenance purposes, test its services only to the extent necessary to detect and/or clear troubles.

(E) Services are provided 24 hours daily, seven days per week, except as set forth in other applicable sections of this tariff.

(F) Iowa Network does not warrant that its facilities and services meet standards other than those set forth in this tariff.

2.1.2 Limitations

(A) The customer may not assign or transfer the use of services provided under this tariff; however, where there is no interruption of use or relocation of the services, such assignment or transfer may be made to:

2. General Regulations (Cont'd)

2.1 Undertaking of Iowa Network (Cont'd)

2.1.2 Limitations (Cont'd)

(A) (Cont'd)

(1) another customer, whether an individual, partnership, association or corporation, provided the assignee or transferee assumes all outstanding indebtedness for such services, and the unexpired portion of the minimum period and the termination liability applicable to such services, if any; or a court-appointed receiver, trustee or other person acting pursuant to law in bankruptcy, receivership, reorganization, insolvency, liquidation or other similar proceedings, provided the assignee or transferee assumes the unexpired portion of the minimum period and the termination liability applicable to such services, if any.

In all cases of assignment or transfer, the written acknowledgment of Iowa Network is required prior to such assignment or transfer which acknowledgment shall be made within fifteen 15 days from the receipt of notification. All regulations and conditions contained in this tariff shall apply to such assignee or transferee.

The assignment or transfer of services does not relieve or discharge the assignor or transferor from remaining jointly or severally liable with the assignee or transferee for any obligations existing at the time of the assignment or transfer.

2. General Regulations (Cont'd)

2.1 Undertaking of Iowa Network (Cont'd)

2.1.2 Limitations (Cont'd)

(B) The use and restoration of services shall be in accordance with Part 64, Subpart D of the Federal Communications Commission's Rules and Regulations, which specifies the priority system for such activities.

(C) Subject to compliance with the rules mentioned in (B) preceding, the services offered herein will be provided to customers on a first-come, first-served basis. First-come, first-served shall be based upon the received time and date stamped by Iowa Network on customer orders which contain the information as required for each respective service as delineated in other sections of this tariff. Customer orders shall not be deemed to have been received until such information is provided. Should questions arise which preclude order issuance due to missing information or the need for clarification, Iowa Network will attempt to seek such missing information or clarification on a verbal basis.

2.1.3 Liability

(A) Iowa Network's liability, if any, for its willful misconduct is not limited by this tariff. With respect to any other claim or suit, by a customer or by any others, for damages associated with the installation, provision, termination, maintenance, repair or restoration of service, and subject to the provisions of (B) through (H)

2. General Regulations (Cont'd)

2.1 Undertaking of Iowa Network (Cont'd)

2.1.3 Liability (Cont'd)

(A) (Cont'd)

following, Iowa Network's liability, if any, shall not exceed an amount equal to the proportionate charge for the service for the period during which the service was affected. This liability for damages shall be in addition to any amounts that may otherwise be due the customer under this tariff as a Credit Allowance for a Service Interruption.

(B) Iowa Network shall not be liable for any act or omission of any other carrier or customer providing a portion of a service, nor shall Iowa Network for its own act or omission hold liable any other carrier or customer providing a portion of a service.

(C) Reserved for Future Use

(D) Reserved for Future Use

(E) Iowa Network shall be indemnified, defended and held harmless by the customer against any claim, loss or damage arising from its use of services offered under this tariff, involving:

(1) Claims for libel, slander, invasion of privacy, or infringement of copyright arising from any communications;

2. General Regulations (Cont'd)

2.1 Undertaking of Iowa Network (Cont'd)

2.1.3 Liability (Cont'd)

(E) (Cont'd)

(2) Claims for patent infringement arising from combining or using the service furnished by Iowa Network in connection with facilities or equipment furnished by the customer; or

(3) All other claims arising out of any act or omission of the customer in the course of using services provided pursuant to this tariff.

(F) Iowa Network does not guarantee or make any warranty with respect to its services when used in an explosive atmosphere. Iowa Network shall be indemnified, defended and held harmless by the customer from any and all claims by any person relating to the customer's use of services so provided.

(G) No license under patents (other than the limited license to use) is granted by Iowa Network or shall be implied or arise by estoppel, with respect to any service offered under this tariff. Iowa Network will defend the customer against claims of patent infringement arising solely from the use by the customer of services offered under this tariff and will indemnify such customer for any damages awarded based solely on such claims.

2. General Regulations (Cont'd)

2.1 Undertaking of Iowa Network (Cont'd)

2.1.3 Liability (Cont'd)

(H) Iowa Network's failure to provide or maintain services under this tariff shall be excused by labor difficulties, governmental orders, civil commotions, criminal actions taken against Iowa Network, acts of God and other circumstances beyond Iowa Network's reasonable control, subject to the Credit Allowance for a Service Interruption as set forth in 2.4.4 following.

2.1.4 Provision of Services

The services offered under the provisions of this tariff are subject to availability. Iowa Network, to the extent that such services are or can be made available with reasonable effort, will provide to the customer upon reasonable notice services offered in other applicable sections of this tariff at rates and charges specified therein.

2.1.5 Installation and Termination of Services

The Access Service provided under this tariff (A) includes Iowa Network's communication facilities up to the point of interconnection as defined in 2.6 following which denotes the demarcation point or network interface and (B) will be provided by Iowa Network to such point of interconnection. Any additional terminations at the customer's premises beyond such point of interconnection are the sole responsibility of the customer.

2. General Regulations (Cont'd)

2.1 Undertaking of Iowa Network (Cont'd)

2.1.6 Maintenance of Services

The services provided under this tariff shall be maintained by Iowa Network. The customer or others may not rearrange, move, disconnect, remove or attempt to repair any facilities provided by Iowa Network, other than by connection or disconnection to any interface means used, except with the written consent of Iowa Network.

Iowa Network shall adopt and pursue a maintenance program aimed at achieving efficient operation of its system so as to promote the rendering of safe, adequate and continuous service at all times. Maintenance shall include keeping all plant and equipment in a good state of repair consistent with safe and adequate service performance. Broken, damaged or deteriorated parts which are no longer serviceable shall be repaired or replaced. Adjustable apparatus and equipment shall be readjusted as necessary when found by preventive routines or fault location tests to be in unsatisfactory operating condition. Electrical faults, such as noise induction, cross talk, or poor transmission characteristics shall be corrected to the extent practical within the design capability of the plant affected.

Maintenance of aerial plant shall include the replacement of broken or badly deteriorated poles, brackets, and broken-down guides. Defective splices shall be replaced and adequate clearance provided.

2. General Regulations (Cont'd)

2.1 Undertaking of Iowa Network (Cont'd)

2.1.6 Maintenance of Services (Cont'd)

Central access tandem equipment shall be inspected and routinely tested at regular intervals, and such repairs, adjustments or replacements made as are found to be necessary and as required to ensure the proper functioning of the equipment.

Records of various tests and inspections shall be kept on file in the office of Iowa Network for a minimum of one (1) year. These records shall show the line or regulated equipment tested or inspected, the reason for the test, the general conditions under which the test was made, the general result of the test and such corrections as were made when the test indicated need for same.

2.1.7 Changes and Substitutions

Except as provided for equipment and systems subject to F.C.C. Part 68 Regulations at 47 C.F.R. Section 68.110(b), Iowa Network may, where such action is reasonably required in the operation of its business, (A) substitute, change or rearrange any facilities used in providing service under this tariff, (B) change minimum protection criteria, (C) change operating or maintenance characteristics of facilities or (D) change operations or procedures of Iowa Network. In case of any such substitution, change or rearrangement, the transmission parameters will be within the range as set forth in Section 15. following. Iowa Network shall not be responsible if any such substitution, change or rearrangement renders any customer furnished

2. General Regulations (Cont'd)

2.1 Undertaking of Iowa Network (Cont'd)

2.1.7 Changes and Substitutions (Cont'd)

services obsolete or requires modification or alteration thereof or otherwise affects their use or performance. If such substitution, change or rearrangement materially affects the operating characteristics of the facility, Iowa Network will provide reasonable notification to the customer in writing. Reasonable time will be allowed for any redesign and implementation required by the change in operating characteristics. Iowa Network will work cooperatively with the customer to determine reasonable notification procedures.

2.1.8 Refusal and Discontinuance of Service

(A) Unless the provisions of 2.2.2(B) or 2.5 following apply, if the customer fails to comply with 2.1.6 preceding or 2.2.3, 2.3.1, 2.3.6, 2.3.7 or 2.4 following, including any payments to be made by it on the dates and times herein specified, Iowa Network may, on thirty (30) days written notice by Certified U.S. Mail to the person designated by the customer to receive such notices of noncompliance, refuse additional applications for service and/or refuse to complete any pending orders for service at any time thereafter. If Iowa Network does not refuse additional applications for service on the date specified in the thirty (30) days notice, and the customer's noncompliance continues, nothing contained herein shall preclude Iowa Network's right to refuse additional applications for service without further notice to the noncomplying customer.

2. General Regulations (Cont'd)

2.1 Undertaking of Iowa Network (Cont'd)

2.1.8 Refusal and Discontinuance of Service (Cont'd)

(B) Unless the provisions of 2.2.2(B) or 2.5 following apply, if the customer fails to comply with 2.1.6 preceding or 2.2.3, 2.3.1, 2.3.6, 2.3.7 or 2.4 following, including any payments to be made by it on the dates and times herein specified, Iowa Network may, on thirty (30) days written notice by Certified U.S. Mail to the person designated by the customer to receive such notices of noncompliance, discontinue the provision of the services involved at any time thereafter. In the case of such discontinuance, all applicable charges, including termination charges, shall become due. If Iowa Network does not discontinue the provision of the services involved on the date specified in the thirty (30) days notice, and the customer's noncompliance continues, nothing contained herein shall preclude Iowa Network's right to discontinue the provision of the services involved without further notice to the noncomplying customer.

(C) The notice of pending disconnection shall be a written notice setting forth the reason for the notice, and the final date by which the account is to be settled or specific action taken. The notice shall be considered rendered to the customer when deposited in theU.S. mail with postage prepaid. If delivery is by other than U.S. mail, the notice shall be considered rendered when delivered to the last known

2. General Regulations (Cont'd)

2.1 Undertaking of Iowa Network (Cont'd)

2.1.8 Refusal and Discontinuance of Service (Cont'd)

(C) (Cont'd)

address of the person responsible for the payment for the service. The final date shall be not less than five (5) days after notice is rendered.

(1) One (1) written notice, including all reasons for the notice, shall be given where more than one (1) cause exists for refusal or disconnection of service. The notice shall also state the final date by which the account is to be settled or other specific action taken. In determining the final date, the days of notice for the causes shall be concurrent.

(D) Service may be refused or disconnected for nonpayment of a bill or deposit provided that Iowa Network has made a reasonable attempt to effect collection and:

(1) Has provided the customer with five (5) days' prior written notice with respect to an unpaid bill and twelve (12) days prior written notice with respect to an unpaid deposit, disconnection may take place prior to the expiration of the five (5)-day unpaid bill notice period if Iowa Network determines, from verifiable data, that usage during the five (5)-day notice period is so abnormallyhigh that a risk of irreparable revenue loss is created.

2. General Regulations (Cont'd)

2.1 Undertaking of Iowa Network (Cont'd)

2.1.8 Refusal and Discontinuance of Service (Cont'd)

(D) (Cont'd)

(2) Is prepared to reconnect the same day if disconnection is scheduled for a weekend, holiday or after 2:00 p.m.

2.1.9 Engineering

(A) Requirement For Good Engineering Practice

The facilities of Iowa Network shall be constructed, installed, maintained and operated subject to the provisions of the Iowa electrical safety code as defined in IAC [199], Chapter 25 (476, 476A, 478), or the requirements of any municipality having jurisdiction, whichever may be the most stringent, and in accordance with accepted good engineering practice in the communication industry to assure, as far as reasonably possible, continuity of service, uniformity in the quality of service furnished, and the safety of persons and property.

(B) Adequacy Of Service

(1) Iowa Network shall employ recognized engineering and administrative procedures to determine the adequacy of service being provided to the customer.

2. General Regulations (Cont'd)

2.1 Undertaking of Iowa Network (Cont'd)

2.1.9 Engineering (Cont'd)

(B) Adequacy Of Service (Cont'd)

(2) Traffic studies shall be made and records maintained to determine that sufficient equipment and an adequate operating force are provided during the busy-season, busy-hour period.

(3) Iowa Network shall make reasonable provisions to meet emergencies resulting from failures of lighting or power service, sudden and prolonged increases in traffic, or from fire, storm, or Acts of God. Iowa Network shall inform employees as to procedures to be followed in the event of an emergency in order to prevent or mitigate interruption or impairment of Access Service. A permanent auxiliary power unit will be installed at Iowa Network's central access tandem and alarms will be maintained in proper condition to indicate improper functioning of the equipment. So that emergency calls will be given prompt attention, customers may call One Call toll free at 800-292-8989 during the twenty-four (24) hours of the day.

(4) Iowa Network shall employ adequate procedures for assignment of facilities. The assignment record shall be kept up-to-date and checked periodically to determine if adjustments are necessary to maintain proper balance in all groups.

2. General Regulations (Cont'd)

2.1 Undertaking of Iowa Network (Cont'd)

2.1.9 Engineering (Cont'd)

(B) Adequacy Of Service (Cont'd)

(5) Iowa Network shall furnish and maintain adequate plant, equipment and facilities to provide satisfactory transmission of communications to interexchange carriers. Transmission shall be at adequate volume levels and free of excessive distortion. Levels of noise and cross talk shall be such as not to impair communications. For interexchange trunks, Iowa Network will provide facilities so that at least ninety-five percent (95%) of telephone calls offered to the group will not encounter an all-trunks-busy condition. For toll connecting trunks, the figure shall be at least ninety-seven percent (97%). The transmission objectives set forth herein are based upon the use of standard telephone stations connected to a forty-eight (48) volt dial central office, and measured at a frequency of one thousand (1,000) hertz. The overall transmission loss on interexchange or interoffice trunks will not be more than ten (10) decibels. Whenever feasible, the overall transmission loss on intertoll trunks and on terminating links will be no more than five (5) decibels measured at multiple frequencies between two hundred (200) and three thousand (3,000) hertz. Because

2. General Regulations (Cont'd)

2.1 Undertaking of Iowa Network (Cont'd)

2.1.9 Engineering (Cont'd)

(B) Adequacy Of Service (Cont'd)

(5) (Cont'd)

these trunks may be only one of several connected links on some toll routes, it may be necessary to provide better facilities in order to keep the overall net circuit losses within the five (5) decibel limit so as to provide satisfactory message transmission.

Where joint construction is mutually agreed upon, it shall be subject to the provisions of the Iowa electrical safety code or such other appropriate regulation as may be prescribed.

(C) Service Interruption

(1) Iowa Network shall make all reasonable efforts to prevent interruptions of service. When interruptions occur, Iowa Network shall reestablish service with the shortest possible delay.

(2) Arrangements shall be made to have personnel available to receive and record trouble reports twenty-four (24) hours daily and also to clear trouble of an emergency nature; at night, on holidays, on weekends, as well as during regular working hours.

2. General Regulations (Cont'd)

2.1 Undertaking of Iowa Network (Cont'd)

2.1.9 Engineering (Cont'd)

(C) Service Interruption (Cont'd)

(3) Whenever service must be interrupted during regular working hours for the purpose of working on the lines, cable or equipment, the work shall be done at a time which will cause the least inconvenience to the customers, and any who would be seriously affected by such interruption shall, so far as possible, be notified in advance.

Iowa Network shall keep a written record showing all interruptions affecting its Access Service or any major portion thereof for a minimum of six (6) years. This record shall show the date, time, duration, time cleared and extent and cause of the interruption. This record shall be available to the Board or its authorized representatives upon request at any time within the period prescribed for retention of such records.

Whenever a trouble report is received, a record will be made by Iowa Network and if repeated within a thirty (30)-day period by the same customer, this case shall be referred to a supervisor for permanent correction.

When a customer's service is reported or is found to be out of order, it shall be restored as promptly as possible.

2. General Regulations (Cont'd)

2.1 Undertaking of Iowa Network (Cont'd)

2.1.10 Notification of Service-Affecting Activities

Iowa Network will provide the customer timely notification of service-affecting activities that may occur during the normal operation of its business. Such activities may include, but are not limited to, equipment or facilities additions, removals or rearrangements, routine preventative maintenance and major switching machine change-out. Generally, such activities are not individual customer service specific; they affect many customer services. No specific advance notification period is applicable to all service activities. Iowa Network will work cooperatively with the customer to determine the reasonable notification requirements. With some emergency or unplanned service-affecting conditions, such as an outage resulting from cable damage, notification to the customer may not be possible.

2.1.11 Coordination with Respect to Network Contingencies

Iowa Network intends to work cooperatively with the customer to develop network contingency plans in order to maintain maximum network capability following natural or man-made disasters which affect telecommunications services, subject to the Restoration Priority requirements of Part 64 of the F.C.C.'s Rules.

2. General Regulations (Cont'd)

2.1 Undertaking of Iowa Network (Cont'd)

2.1.12 Provision and Ownership of Telephone Numbers

Iowa Network reserves the reasonable right to assign, designate or change telephone numbers, any other call number designations associated with Access Service, or the Exchange Telephone Company serving central office prefixes associated with such numbers, when necessary in the conduct of its business. Should it become necessary to make a change in such number(s), Iowa Network will furnish to the customer six (6) months notice, by Certified U.S. Mail, of the effective date and an explanation of the reason(s) for such change(s). In the case of emergency conditions, however, e.g., a fire in a wire center, it may be necessary to change a telephone number without six (6) months notice in order to provide service to the customer.

2.1.13 Safety

Iowa Network shall exercise reasonable care to reduce the hazards to which its employees, its customers or users and the general public may be subjected. Iowa Network shall give reasonable assistance to the Board in the investigation of the cause of accidents and in the determination of suitable means of preventing accidents. Iowa Network shall maintain a summary of all reportable accidents arising from its operations. Iowa Network shall file with the Board a report of each accident in connection with the operation of its facilities which result in an injury temporarily disabling an employee for two (2) days or more or resulting in permanent disability or death. Prompt notice of fatal

2. General Regulations (Cont'd)

2.1 Undertaking of Iowa Network (Cont'd)

2.1.13 Safety (Cont'd)

accidents shall be given to the Board by telephone. A written report of the accident shall be filed within ten (10) days next following the occurrence of the accident on forms approved by the Board. Such written reports shall indicate the following information:

(1) the name, address and age of the person or persons involved in the accident.

(2) the time and place where the accident occurred.

(3) the cause of the accident in detail.

Iowa Network shall adopt and execute a safety program, fitted to the size and type of its operations. At a minimum, the safety program will:

a. require employees to use suitable tools and equipment in order that they may perform their work in a safe manner.

b. instruct employees in safe methods of performing their work.

c. instruct employees who, in the course of their work, are subject to the hazard of electrical shock, asphyxiation or drowning, in accepted methods of artificial respiration.

2. General Regulations (Cont'd)

2.1 Undertaking of Iowa Network (Cont'd)

2.1.14 Held Applications

During such period of time as Iowa Network may not be able to supply initial access service to prospective customers or upgrade existing customers within thirty (30) days after the date applicant desires service, Iowa Network shall keep a record showing the name and address of each applicant for service, the date of application, the date that service is desired, the class and rate of service applied for, together with the reason for the inability to provide new service or a higher grade of service to the applicant.

2.1.15 Customer Information

(A) Iowa Network shall maintain up-to-date maps, plans, or records of its network, together with such information as may be necessary to enable Iowa Network to advise prospective customers, and others entitled to the information, as to the facilities available for serving prospective customers in a serving area.

(B) Iowa Network shall notify customers affected by a change in rates or schedule classification in accordance with the Board's rules.

(C) Iowa Network shall post notices in a conspicuous place in each office of Iowa Network where applications for service are received, informing the public that copies of the rate schedules and rules relating to the services of Iowa Network, as filed with the Board, are available for inspection.

2. General Regulations (Cont'd)

2.1 Undertaking of Iowa Network (Cont'd)

2.1.15 Customer Information (Cont'd)

(D) Iowa Network shall furnish such additional information as the customer may reasonably request.

(E) Employees responsible for the receiving of customer telephone calls and customer office visits shall be properly qualified and instructed in the screening and prompt handling of complaints to assure prompt reference of the complaint to the person or department capable of effective handling of the matter complained of and to obviate the necessity of the customer's preliminary repetition of the entire complaint to employees lacking in ability and authority to take appropriate action.

2.1.16 Customer Complaints

(A) Complaints concerning the charges, practices, facilities or service of Iowa Network shall be investigated promptly and thoroughly. Iowa Network shall keep a record of such complaint showing the name and address of the complainant, the date and nature of the complaint, its disposition, and all other pertinent facts dealing with the complaint, which will enable Iowa Network to review and analyze its procedure and actions. The records maintained by Iowa Network under this rule shall be available for inspection by the Board or its staff upon request.

2. General Regulations (Cont'd)

2.1 Undertaking of Iowa Network (Cont'd)

2.1.16 Customer Complaints (Cont'd)

(B) The customer must notify Iowa Network in writing of the nature and basis of any complaint. Should the complaint not be resolved by the payment date, the customer will, notwithstanding the continuing existence of the dispute, pay the billed amount. Within a reasonable period of time following notification, Iowa Network will provide written notice to the customer of the status of the complaint. If the customer satisfies the requirements for a credit as set forth in Section 2.4.1(B)(2)(c) following, such a credit shall be remitted no later than sixty (60) calendar days following resolution. The final step in the complaint hearing and review procedure shall be a filing for Board resolution of the issues.

(1) The General Manager of Iowa Network is the person authorized to receive, act upon and respond to communications from the Board and customers regarding complaints. The General Manager can be contacted by telephone at (515) 226-0110. Written complaints should be mailed to Iowa Network's address listed on the bottom of this tariff.

2. General Regulations (Cont'd)

2.2 Use

2.2.1 Reserved for Future Use

2.2.2 Interference or Impairment

(A) The characteristics and methods of operation of any circuits, facilities or equipment provided by other than Iowa Network and associated with the facilities utilized to provide services under this tariff shall not interfere with or impair service over any facilities of Iowa Network, its affiliated companies, or the Participating Telephone Companies involved in its services, cause damage to their plant, impair the privacy of any communications carried over their facilities or create hazards to the employees of any of them or the public.

(B) Except as provided for equipment or systems subject to the F.C.C. Part 68 Rules in 47 C.F.R. Section 68.108, if such characteristics or methods of operation are not in accordance with (A) preceding, Iowa Network will, where practicable, notify the customer that temporary discontinuance of the use of a service may be required; however, where prior notice is not practicable, nothing contained herein shall be deemed to preclude Iowa Network's right to temporarily discontinue forthwith the use of a service if such action is reasonable under the circumstances. In case of such temporary discontinuance, the customer will be promptly notified and afforded the opportunity to correct the condition which gave rise to the temporary discontinuance.

2. General Regulations (Cont'd)

2.2 Use (Cont'd)

2.2.2 Interference or Impairment (Cont'd)

(B) (Cont'd)

During such period of temporary discontinuance, credit allowance for service interruptions as set forth in 2.4.4 following is not applicable.

2.2.3 Unlawful Use

The service provided under this tariff shall not be used for an unlawful purpose.

2. General Regulations (Cont'd)

2.3 Obligations of the Customer

2.3.1 Damages

The customer shall reimburse Iowa Network for damages to Iowa Network facilities utilized to provide services under this tariff caused by the negligence or willful act of the customer or resulting from improper use of Iowa Network facilities, or due to malfunction of any facilities or equipment provided for or by the customer. Iowa Network will, upon reimbursement for damages, cooperate with the customer in prosecuting a claim against the person causing such damage and the customer shall be subrogated to the right of recovery by Iowa Network for the damages to the extent of such payment. Nothing in the foregoing provision shall be interpreted to hold one customer liable for another customer's actions.

2.3.2 Ownership of Facilities and Theft

Facilities utilized by Iowa Network to provide service under the provisions of this tariff shall remain the property of Iowa Network. Such facilities shall be returned to Iowa Network by the customer, whenever requested, within a reasonable period following the request in as good condition as reasonable wear will permit.

2.3.3 Interconnection

As ordered by the Board on page 15 of its Final Decision and Order issued on October 18, 1988, the customer is responsible for and bears the burden of reaching a point of interconnection with an Iowa Network premises set forth in Section 8. following.

2. General Regulations (Cont'd)

2.3 Obligations of the Customer (Cont'd)

2.3.4 Reserved for Future Use

2.3.5 Reserved for Future Use

2.3.6 Availability for Testing

The services provided under this tariff shall be available to Iowa Network at times mutually agreed upon in order to permit Iowa Network to make tests and adjustments appropriate for maintaining the services in satisfactory operating condition. Such tests and adjustments shall be completed within a reasonable time. No credit will be allowed for any interruptions involved during such tests and adjustments.

2.3.7 Balance

All signals for transmission over the services provided under this tariff shall be delivered by the customer balanced to ground except for ground start, duplex (DX) and McCulloh-Loop (Alarm System) type signaling and dc telegraph transmission at speeds of 75 baud or less.

2.3.8 Design of Customer Services

Subject to the provisions of 2.1.7 preceding, the customer shall be solely responsible, at its own expense, for the overall design of its services and for any redesigning or rearrangement of its services which may be required because of changes in facilities, operations or procedures of Iowa Network, minimum protection criteria or operating or maintenance characteristics of the facilities.

2. General Regulations (Cont'd)

2.3 Obligations of the Customer (Cont'd)

2.3.9 References to Iowa Network

The customer may advise End Users that certain services are provided by Iowa Network in connection with the service the customer furnishes to End Users; however, the customer shall not represent that Iowa Network jointly participates in the customer's services.

2.3.10 Reserved for Future Use

2.3.11 Claims and Demands for Damages

(A) With respect to claims of patent infringement made by third persons, the customer shall defend, indemnify, protect and save harmless Iowa Network from and against all claims arising out of the combining with, or use in connection with, the services provided under this tariff, any circuit, apparatus, system or method provided by the customer.

(B) The customer shall defend, indemnify and save harmless Iowa Network from and against suits, claims, losses or damages including punitive damages, attorneys' fees and court costs by third persons arising out of the construction, installation, operation, maintenance, or removal of the customer's circuits, facilities, or equipment connected to Iowa Network's services provided under this tariff, including, without limitation, Workmen's Compensation claims, actions for infringement of copyright and/or unauthorized use of program material, libel and slander actions based on

2. General Regulations (Cont'd)

2.3 Obligations of the Customer (Cont'd)

2.3.11 Claims and Demands for Damages (Cont'd)

(B) (Cont'd)

the content of communications transmitted over the customer's circuits, facilities or equipment, and proceedings to recover taxes, fines, or penalties for failure of the customer to obtain or maintain in effect any necessary certificates, permits, licenses, or other authority to acquire or operate the services provided under this tariff; provided, however, the foregoing indemnification shall not apply to suits, claims, and demands to recover damages for damage to property, death, or personal injury unless such suits, claims or demands are based on the tortious conduct of the customer, its officers, agents or employees.

(C) Reserved for Future Use

(D) The customer shall defend, indemnify and save harmless Iowa Network from and against any suits, claims, losses or damages, including punitive damages, attorneys' fees and court costs by the customer or third parties arising out of any act or omission of the customer in the course of using services provided under this tariff.

2.3.12 Reserved for Future Use

2. General Regulations (Cont'd)

2.3 Obligations of the Customer (Cont'd)

2.3.13 Coordination with Respect to Network Contingencies

The customer shall, in cooperation with Iowa Network, coordinate in planning the actions to be taken to maintain maximum network capability following natural or man-made disasters which affect telecommunications services.

2.3.14 Jurisdictional Report Requirements

(A) Jurisdictional Reports

(1)(a) When a customer orders Feature Group B Switched Access Service, the customer shall state in its order the projected interstate percentage for interstate usage for each Feature Group B Switched Access Service group ordered. If the customer discontinues some but not all of the Feature Group B Switched Access Services in a group, it shall provide the projected interstate percentage for such services which are discontinued.

(b) Pursuant to Federal Commmunications Commission Order FCC 85-145 adopted April 16, 1985, Feature Group B interstate usage is to be developed as though every call that enters a customer network at

2. General Regulations (Cont'd)

2.3 Obligations of the Customer (Cont'd)

2.3.14 Jurisdictional Report Requirements (Cont'd)

(A) Jurisdictional Reports (Cont'd)

(1)(b) (Cont'd)

a point within the same state as that in which the called station (as designated by the called station telephone number) is situated is an intrastate communication and every call for which the point of entry is in a state other than that where the called station (as designated by the called station telephone number) is situated is an interstate communication.

(c) The projected interstate percentages will be used by Iowa Network to apportion the usage between interstate and intrastate until a revised report is received as set forth in (7) following.

(2) All single Feature Group B Switched Access Service usage and charges will be apportioned by Iowa Network between interstate and intrastate. The projected interstate percentage reported as set forth in 1(a) and 1(b) preceding will be used to make such apportionment.

TARIFF LIBRARY
UTILITIES DIVISION

2. General Regulations (Cont'd)

2.3 Obligations of the Customer (Cont'd)

2.3.14 Jurisdictional Report Requirements (Cont'd)

(A) Jurisdictional Reports (Cont'd)

(3) For trunk group arrangements where either the interstate or the intrastate charges are based on measured usage, the interstate Feature Group B Switched Access Service(s) information reported as set forth in (1) preceding will be used to determine the charges as follows:

For all groups the number of access minutes for a group will be multiplied by the projected interstate percentage to develop the interstate access minutes. The number of access minutes for the group minus the developed interstate access minutes for the group will be the developed intrastate access minutes.

(4) When a customer orders Feature Group D Switched Access Service, Iowa Network, where the jurisdiction can be determined from the call detail, will, unless the customer provides the projected interstate percentage for interstate usage for each end office group in its order, determine the projected interstate percentage as follows: (C) (C)

TARIFF LIBRARY
UTILITIES DIVISION

2. General Regulations (Cont'd)

2.3 Obligations of the Customer (Cont'd)

2.3.14 Jurisdictional Report Requirements (Cont'd)

(A) Jurisdictional Reports (Cont'd)

(4) (Cont'd)

For originating access minutes, the projected interstate percentage will be developed on a monthly basis by end office when the Feature Group D Switched Access Service access minutes are measured by dividing the measured interstate originating access minutes (the access minutes where the calling number is in one state and the called number is in another state) by the total originating access minutes when the call detail is adequate to determine the appropriate jurisdiction. For terminating access minutes, the data used by Iowa Network to develop the projected interstate percentage for originating access minutes will be used to develop a projected interstate percentage for such terminating access minutes. When originating call details are insufficient to determine the jurisdiction for the call, the customer shall supply the projected interstate percentage or authorize Iowa Network to use the Iowa Network developed percentage. This percentage shall be used by Iowa Network as the interstate percentage for such call detail. Iowa Network will designate the number obtained by subtracting the (C) (T)

2. General Regulations (Cont'd)

2.3 Obligations of the Customer (Cont'd)

2.3.14 Jurisdictional Report Requirements (Cont'd)

(A) Jurisdictional Reports (Cont'd)

(4) (Cont'd)

projected interstate percentage for originating and terminating access minutes calculated by Iowa Network from 100 (100 - calculated projected interstate percentage = intrastate percentage) as the projected intrastate percentage of use.

(5) Reserved for Future Use

(6) Except where Iowa Network measured access minutes are used as set forth in (4) preceding, the customer reported interstate percentage of use, as set forth in (1) or (4) preceding, will be used until the customer reports a different projected interstate percentage for an in-service end office group. When the customer adds BHMC, lines or trunks to an existing end office group, the customer shall furnish a projected interstate percentage that applies to the added BHMC, lines or trunks. When a customer discontinues BHMC, lines or trunks from an existing group, the customer shall furnish a projected interstate percentage for the discontinued BHMC, lines or trunks in the end office group. The revised report

2. General Regulations (Cont'd)

2.3 Obligations of the Customer (Cont'd)

2.3.14 Jurisdictional Report Requirements (Cont'd)

(A) Jurisdictional Reports (Cont'd)

(6) (Cont'd)

will serve as the basis for future billing and will be effective on the next bill date. No prorating or back billing will be done based on the report.

(7) Effective on the first of January, April, July and October of each year, the customer shall update the intra-state and interstate jurisdictional report. The customer shall forward to Iowa Network, to be received no later than fifteen (15) calendar days after the first of each such month, a revised report showing the interstate and intrastate percentage of use for the past three (3) months ending the last day of December, March, June and September, respectively, for each service arranged for interstate use. Except as set forth in (4) preceding, where jurisdiction can be determined from the call detail, the revised report will serve as the basis for the next three (3) months billing and will be effective on the bill date in the following month (i.e., February, May, August and November) for that service. No prorating or backbilling will be done based on the report. If the customer does not supply the

2. General Regulations (Cont'd)

2.3 Obligations of the Customer (Cont'd)

2.3.14 Jurisdictional Report Requirements (Cont'd)

(A) Jurisdictional Reports (Cont'd)

(7) (Cont'd)

report, Iowa Network will assume the percentages to be the same as that provided in the last quarterly report. For those cases in which a quarterly report has never been received from the customer, Iowa Network will assume the percentages to be the same as that provided in the order for service as set forth in (1) preceding.

(B) The customer shall keep sufficient detail from which the percentage of interstate use can be ascertained and upon request of Iowa Network make the records available for inspection. Such a request will be initiated by Iowa Network no more than once per year. The customer shall supply the data within thirty (30) calendar days of Iowa Network's request.

2.3.15 Determination of Intrastate Rates and Charges for Mixed Interstate and Intrastate Access Service

When mixed interstate and intrastate Access Service is provided, all rates and charges will be prorated between interstate and intrastate. The percentages provided in the reports, as set forth in 2.3.14(A) preceding, will serve as the basis for calculating the rates and charges. The percentages of an Access Service to be charged as intrastate are applied in the following manner:

TARIFF LIBRARY
UTILITIES DIVISION

2. General Regulations (Cont'd)

2.3 Obligations of the Customer (Cont'd)

2.3.15 Determination of Intrastate Rates and Charges for Mixed Interstate and Intrastate Access Service (Cont'd)

(A) Monthly and Nonrecurring Charges (N)

For monthly and nonrecurring chargeable rate elements, multiply the percent intrastate use times the quantity of chargeable elements times the stated tariff rate.

(B) Usage-Sensitive Charges (N)

For usage sensitive (i.e., access minutes and calls) chargeable rate elements, rates are calculated as follows:

(1) multiply the percent intrastate use times actual use (i.e., measured or Iowa Network assumed average use) times the stated tariff rate.

The intrastate percentage will change as revised usage reports are submitted or a revised percentage is calculated as set forth in 2.3.14 preceding.

2.3.16 Reserved for Future Use

2. General Regulations (Cont'd)

2.4 Payment Arrangements and Credit Allowances

2.4.1 Payment of Rates, Charges and Deposits

(A) Iowa Network will, in order to safeguard its interests, only require a customer which has a proven history of late payments to Iowa Network or does not have established credit, except for a customer which is a successor of a company which has established credit and has no history of late payments to Iowa Network, to make a deposit prior to or at any time after the provision of a service to the customer to be held by Iowa Network as a guarantee of the payment of rates and charges. Such deposit may not exceed the actual or estimated rates and charges for the service for a two-month period. The fact that a deposit has been made in no way relieves the customer from complying with Iowa Network's regulations as to the prompt payment of bills. At such time as the provision of the service to the customer is terminated, the amount of the deposit will be credited to the customer's account and any credit balance which may remain will be refunded. At the option of Iowa Network, such a deposit may be refunded or credited to the customer's account when the customer has established credit or after the customer has established a one-year prompt payment record at any time prior to the termination of the provision of the service to the customer. In the case of a cash deposit, the customer will receive interest at an interest rate of twelve percent (12%) per annum, compounded annually, for the period beginning with the

2. General Regulations (Cont'd)

2.4 Payment Arrangements and Credit Allowances (Cont'd)

2.4.1 Payment of Rates, Charges and Deposits (Cont'd)

(A) (Cont'd)

date of deposit to the date of refund or to the date that the deposit is applied to the customer's account or to the date the customer's bill becomes permanently delinquent. The date of refund is that date on which the refund or the notice of deposit return is forwarded to the customer's last known address. The date a customer's bill becomes permanently delinquent, relative to an account treated as an uncollectable account, is the most recent date the account became delinquent.

(1) Iowa Network shall keep records to show:

i. the name and address of each depositor.

ii. the amount and date of the deposit.

iii. each transaction concerning the deposit.

(2) Iowa Network shall issue a receipt of deposit to each customer from whom a deposit is received, and shall provide means whereby a depositor may establish his claim if his receipt is lost.

2. General Regulations (Cont'd)

2.4 Payment Arrangements and Credit Allowances (Cont'd)

2.4.1 Payment of Rates, Charges and Deposits (Cont'd)

(A) (Cont'd)

(3) The deposit shall be refunded after not more than twelve (12) consecutive months of prompt payment (which may be eleven (11) timely payments and one automatic forgiveness of late payment). The account shall be reviewed after twelve (12) months of service and if the deposit is retained it shall again be reviewed at the end of Iowa Network's accounting year or on the anniversary date of the account.

(4) Iowa Network shall make a reasonable effort to return each unclaimed deposit and accrued interest after the termination of the services for which the deposit was made. Iowa Network shall maintain a record of deposit information for at least two (2) years or until such time as the deposit, together with accrued interest, escheats to the state pursuant to Iowa Code Section 556.4, at which time the record and deposit, together with accrued interest less any lawful deductions, shall be sent to the State Treasurer pursuant to Iowa Code Section 556.11.

(5) Unclaimed deposits, together with accrued interest, shall be credited to an appropriate account.

2. General Regulations (Cont'd)

2.4 Payment Arrangements and Credit Allowances (Cont'd)

2.4.1 Payment of Rates, Charges and Deposits (Cont'd)

(A) (Cont'd)

(6) A new or additional deposit may be required when a deposit has been refunded or is found to be inadequate by virtue of increased access service usage or non-payment. Written notice shall be mailed advising the customer of any new additional deposit requirement. The customer shall have no less than twelve (12) days from the date of mailing to comply. The new or additional deposit shall be payable at any of Iowa Network's business offices or local authorized agents. An appropriate receipt shall be provided. No written notice is required to be given of a deposit required as a prerequisite for commencing initial service. If access usage is abnormal, Iowa Network may require a new deposit or an increase in deposit to guarantee payment of bill. A customer who fails to comply with the deposit requirements may be disconnected. Should a deposit be credited to the customer's account, as indicated above, no interest will accrue on the deposit from the date such deposit is credited to the customer's account.

2. General Regulations (Cont'd)

2.4 Payment Arrangements and Credit Allowances (Cont'd)

2.4.1 Payment of Rates, Charges and Deposits (Cont'd)

(B) The bill form or bill insert shall provide the following information:

i. The dates at the beginning and end of the billing period for access service.

ii. The last date for timely payment shall be clearly shown and shall be not less than twenty (20) days after the bill is rendered. The bill shall be considered rendered to the customer when deposited in the U.S. mail with postage prepaid. If the delivery is by other than U.S. mail, the bill shall be considered rendered when delivered to the last known address of the customer.

iii. The amount of the access charges, and of any late payment charge, with separate entries for total amounts current or in arrears. Iowa Network shall comply with reasonable requests for bill detail.

TARIFF LIBRARY
UTILITIES DIVISION

2. General Regulations (Cont'd)

2.4 Payment Arrangements and Credit Allowances (Cont'd)

2.4.1 Payment of Rates, Charges and Deposits (Cont'd)

(B) (Cont'd)

Iowa Network shall bill on a current basis all rates and charges incurred by and credits due to the customer under this tariff attributable to services established or discontinued during the preceding billing period. In addition, Iowa Network shall bill in advance, charges for all services to be provided during the ensuing billing period except for charges associated with service usage which will be billed in arrears. The bill day (i.e., the billing date of a bill for a customer for Access Service under this tariff), the period of service each bill covers and the payment date will be as follows:

(1) Iowa Network will establish a bill day semi-monthly for each customer account. The bill will cover non-usage sensitive service rates for the ensuing billing period for which the bill is rendered, any known unbilled nonusage sensitive rates for prior periods and unbilled usage rates for the period after the last bill day through the current bill day. Any known unbilled usage rates for prior periods and any known unbilled adjustments will be applied to this bill. Payment for such bills (C)

2. General Regulations (Cont'd)

2.4 Payment Arrangements and Credit Allowances (Cont'd)

2.4.1 Payment of Rates, Charges and Deposits (Cont'd)

(B) (Cont'd)

(1) (Cont'd)

is due as set forth in (2) following. If payment is not received by the payment date, as set forth in (2) following, in immediately available funds, a late payment penalty will apply as set forth in (2) following.

(2)(a) All bills dated, as set forth in (1) preceding, for service provided to the customer by Iowa Network, are due thirty-one (31) days (payment date) after the bill day or by the next bill date (i.e., same date in the following month as the bill date) whichever is the shortest interval, except as provided herein, and are payable in immediately available funds. If the customer does not receive a bill at least twenty (20) days prior to the thirty-one (31) day payment due date, then the bill shall be considered delayed. When the bill has been delayed, upon request of the customer the due date will be extended by the number of days the bill was delayed. Such request of the customer must be accompanied with proof of late bill receipt.

2. General Regulations (Cont'd)

2.4 Payment Arrangements and Credit Allowances (Cont'd)

2.4.1 Payment of Rates, Charges and Deposits (Cont'd)

(B) (Cont'd)

(2)(a) (Cont'd)

If such payment date would cause payment to be due on a Saturday, Sunday or Holiday (i.e., New Year's Day, Independence Day, Labor Day, Thanksgiving Day, Christmas Day, the second Tuesday in November and a day when Washington's Birthday, Memorial Day or Columbus Day is legally observed) payment for such bills will be due from the customer as follows:

If such payment date falls on a Sunday or on a Holiday which is observed on a Monday, the payment date shall be the first non-Holiday day following such Sunday or Holiday. If such payment date falls on a Saturday or on a Holiday which is observed on Tuesday, Wednesday, Thursday or Friday, the payment date shall be the last non-Holiday day preceding such Saturday or Holiday.

2. General Regulations (Cont'd)

2.4 Payment Arrangements and Credit Allowances (Cont'd)

2.4.1 Payment of Rates, Charges and Deposits (Cont'd)

(B) (Cont'd)

(2)(b) Further, if any portion of the payment is received by Iowa Network after the payment date as set forth in (a) preceding, or if any portion of the payment is received by Iowa Network in funds which are not immediately available to Iowa Network, then a late payment penalty shall be due to Iowa Network. The late payment penalty shall be the portion of the payment not received by the payment date times a late factor. The late factor shall be the lesser of:

(I) the highest interest rate (in decimal value) which may be levied by law for commercial transactions, compounded daily for the number of days from the payment date to and including the date that the customer actually makes the payment to Iowa Network, or

(II) 0.000590 per day, compounded daily for the number of days from the payment date to and including the date that the customer actually makes the payment to Iowa Network.

2. General Regulations (Cont'd)

2.4 Payment Arrangements and Credit Allowances (Cont'd)

2.4.1 Payment of Rates, Charges and Deposits (Cont'd)

(B) (Cont'd)

(2)(c) In the event that a billing dispute concerning any rates or charges billed to the customer by Iowa Network is resolved in favor of Iowa Network, any payments withheld pending settlement of the dispute shall be subject to the late payment penalty set forth in (b) preceding. If the customer disputes the bill on or before the payment date, and pays the undisputed amount on or before the payment date, any late payment charge for the disputed amount will not start until ten (10) days after the payment date.

In the event of a dispute concerning the bill, Iowa Network may require the customer to pay a sum of money equal to the amount of the undisputed portion of the bill. Following payment of the undisputed amount, efforts to resolve the complaint, using complaint procedures in this tariff, shall continue and for not less than forty-five (45) days after the rendering of the disputed bill, the service shall not be disconnected for nonpayment of the disputed amount. The forty-five (45) days may be extended by up to sixty (60) days if requested of

2. General Regulations (Cont'd)

2.4 Payment Arrangements and Credit Allowances (Cont'd)

2.4.1 Payment of Rates, Charges and Deposits (Cont'd)

(B) (Cont'd)

(2)(c) (Cont'd)

Iowa Network by the Board in the event the customer files a written complaint with the Board.

If the billing dispute is resolved in favor of the customer, no late payment penalty will apply to the disputed amount. In addition, if the customer disputes the billed amount and pays the total amount (i.e., the nondisputed amount and the disputed amount) on or before the payment date and the billing dispute is resolved in favor of the customer, the customer will receive a credit for a disputed amount penalty from Iowa Network if the billing dispute is not resolved within ten (10) working days following the payment date or the date the customer furnishes to Iowa Network documentation to support its claim plus ten (10) working days, whichever date is the later date. The disputed amount penalty shall be the disputed amount resolved in the customer's favor times a penalty factor. The penalty factor is as set forth in (b) preceding.

2. General Regulations (Cont'd)

2.4 Payment Arrangements and Credit Allowances (Cont'd)

2.4.1 Payment of Rates, Charges and Deposits (Cont'd)

(B) (Cont'd)

(2)(d) No collection fee may be levied in addition to the late payment penalty. This does not prohibit cost-justified charges for disconnection and reconnection of service.

(2)(e) If the customer makes a partial payment in a timely manner, and does not designate the service for which payment is made, the payment shall be credited pro rata between the bill for Iowa Network's services and related taxes. The late payment charge will be applied to only the outstanding balance for Iowa Network's services.

(2)(f) Iowa Network may initiate collection efforts with the issuance of a final bill when the termination of service is at the customer's request. For all other bills, no collection effort other than rendering of the bill shall be undertaken until the delinquency date.

(C) Reserved for Future Use

2. General Regulations (Cont'd)

2.4 Payment Arrangements and Credit Allowances (Cont'd)

2.4.1 Payment of Rates, Charges and Deposits (Cont'd)

(D) Adjustments for the quantities of services established or discontinued in any billing period beyond the minimum period set forth for services in other sections of this tariff will be prorated to the number of days or major fraction of days based on a thirty (30)-day month.

(E) Iowa Network will, upon request, furnish within thirty (30) days of a request at no charge to the customer such detailed information as may reasonably be required for verification of any bill.

(F) When a rate or charge as set forth in this tariff is shown to more than two decimal places, the charges will be determined using the rate shown. The resulting amount will then be rounded to the nearest penny (i.e., rounded to two decimal places).

(G) When more than one copy of a customer bill for services provided under the provisions of this tariff is furnished to the customer, an additional charge applies for each additional copy of the bill as set forth in 13.3.5 following.

2.4.2 Minimum Periods

The minimum periods for which services are provided and for which rates and charges are applicable is one (1) month, except as otherwise specified.

2. General Regulations (Cont'd)

2.4 Payment Arrangements and Credit Allowances (Cont'd)

2.4.3 Cancellation of an Order for Service

Provisions for the cancellation of an order for service are set forth in 5.2.2(B) and 5.2.3 following.

2.4.4 Credit Allowance for Service Interruptions

(A) General

A service is interrupted when it becomes unusable to the customer because of a failure of a facility component used to furnish service under this tariff or in the event that the protective controls applied by Iowa Network result in the complete loss of service by the customer as set forth in 6.5.1 following. An interruption period starts when an inoperative service is reported to Iowa Network, and ends when the service is operative.

(B) When A Credit Allowance Applies

In case of an interruption to any service, allowance for the period of interruption, if not due to the negligence of the customer, shall be as follows:

(1) For Switched Access Service, no credit shall be allowed for an interruption of less than twenty-four (24) hours. The customer shall be credited for an interruption of twenty-four (24) hours

2. General Regulations (Cont'd)

2.4 Payment Arrangements and Credit Allowances (Cont'd)

2.4.4 Credit Allowance for Service Interruptions (Cont'd)

(B) When A Credit Allowance Applies (Cont'd)

(1) (Cont'd)

or more at the rate of 1/30 of any applicable monthly rates for each period of twenty-four (24) hours or major fraction thereof that the interruption continues.

(2) The credit allowance(s) for an interruption or for a series of interruptions shall not exceed any monthly rate for the service interrupted in any one monthly billing period.

(3) Reserved for Future Use

(C) When a Credit Allowance Does Not Apply

No credit allowance will be made for:

(1) Interruptions caused by the negligence of the customer.

(2) Interruptions of a service due to the failure of equipment or systems provided by the customer or others.

(3) Interruptions of a service during any period in which Iowa Network is not afforded access to the location where the service is terminated.

2. General Regulations (Cont'd)

2.4 Payment Arrangements and Credit Allowances (Cont'd)

2.4.4 Credit Allowance for Service Interruptions (Cont'd)

(C) When a Credit Allowance Does Not Apply (Cont'd)

(4) Interruptions of a service for maintenance purposes, to make rearrangements, or for the implementation of an order for a change in the service during the time that was negotiated with the customer. Thereafter, a credit allowance as set forth in (B) preceding applies.

(5) Reserved for Future Use

(6) Periods when the customer continues to use the service on an impaired basis.

(7) Periods of temporary discontinuance as set forth in 2.2.2(B) preceding.

(8) An interruption or a group of interruptions, resulting from a common cause, for amounts less than one dollar ($1.00).

(9) Periods of interruption as set forth in 13.3.1 following.

(10) Interruption of service caused by a customer's failure to provide notification to Iowa Network of media stimulated mass calling events as set forth in 6.6.5 following. (N)

(D) Reserved for Future Use

2. General Regulations (Cont'd)

2.4 Payment Arrangements and Credit Allowances (Cont'd)

2.4.4 Credit Allowance for Service Interruptions (Cont'd)

(E) Temporary Surrender of a Service

In certain instances, the customer may be requested by Iowa Network to surrender a service for purposes other than maintenance, testing or activity relating to a service order. If the customer consents, a credit allowance will be granted. The credit allowance will be 1/1440 of the monthly rate for each period of thirty (30) minutes or fraction thereof that the service is surrendered. In no case will the credit allowance exceed the monthly rate for the service surrendered in any one (1) monthly billing period.

2.4.5 Reserved for Future Use

2.4.6 Reserved for Future Use

2.4.7 Title or Ownership Rights

(A) The payment of rates and charges by customers for the services offered under the provisions of this tariff does not assign, confer or transfer title or ownership rights to proposals or facilities developed or utilized, respectively, by Iowa Network in the provision of such services.

2. General Regulations (Cont'd)

2.4 Payment Arrangements and Credit Allowances (Cont'd)

2.4.8 Rating and Billing of Access Services Provided by Iowa Network and Participating Telephone Companies

Iowa Network will handle rating and billing of Access Services under this tariff as follows.

(A) With Feature Group C, Feature Group D and terminating Feature Group B Switched Access Service, Iowa Network will provide Centralized Equal Access Service between Iowa Network's central access tandem and the other fifteen (15) Iowa network premises set forth in Section 8. following and bill the charge in accordance with this tariff. Centralized Equal Access Service is provided as described in 6.1.3(A) following. Iowa Network's rate for the Centralized Equal Access Service element is as set forth in 6.8.1.

(B) Iowa Network will provide the Switched Transport between two or more Iowa Network premises set forth in Section 8. following and bill the charges in accordance with its Access Service tariff. Switched Transport is provided as described in Section 6.1.3(B) following. Iowa Network's rate for this Switched Transport element is as set forth in Section 6.8.3 following. Iowa Network will provide Switched Transport with Feature Group B, Feature Group C, and Feature Group D in both the originating and terminating directions.

As a matter of clarification, the end office switches served by Iowa Network's central access tandem are operated by the appropriate Participating Telephone

2. General Regulations (Cont'd)

2.4 Payment Arrangements and Credit Allowances (Cont'd)

2.4.8 Rating and Billing of Access Services Provided by Iowa Network and Participating Telephone Companies (Cont'd)

(B) (Cont'd)

Company. Therefore, any switched access services ordered under this tariff must be used with a like switched access service provided by a Participating Telephone Company and, when applicable, other Exchange Telephone Companies, or vice versa. In addition to the rates and charges set forth in Sections 6.8 and 4(I) for the services provided by Iowa Network, the customer will also be billed access charges by Participating Telephone Companies and other Exchange Telephone Companies in compliance with their tariffs for the provision of access service in their operating territories between an Iowa Network premises listed in Section 8. following and the end offices served by Iowa Network's central access tandem. The facilities between a customer's premises and an Iowa Network premises set forth in Section 8. following is solely the responsibility of the customer and must be provided by the customer or ordered from another carrier. If these facilities are ordered by the customer from another carrier, the customer may also be billed access charges by the Participating Telephone Companies or other Exchange Telephone Companies in compliance with their tariffs for providing the access services between the customer's premises and an Iowa Network premises set forth in Section 8. following. All other appropriate charges in the tariffs of the Participating Telephone Companies are applicable.

2. General Regulations (Cont'd)

2.5 Connections

2.5.1 General

Equipment and systems may be connected with Switched Access Service furnished by Iowa Network where such connection is made in accordance with the provisions specified in Technical Reference Publication AS No. 1 and in 2.1 preceding.

2.5.2 Reserved for Future Use

2. General Regulations (Cont'd)

2.6 Definitions

Certain terms used herein are defined as follows:

Access Code

The term "Access Code" denotes a uniform five (5) or seven (7) digit code assigned by the Participating Telephone Company to an individual customer. The five (5) digit code has the form 10XXX, and the seven (7) digit code has the form 950-0XXX or 950-1XXX.

Access Minutes

For the purpose of calculating chargeable usage, the term "Access Minutes" denotes customer usage of Iowa Network's facilities and the provision of intrastate service. On the originating end of an intrastate call, usage is measured from the time the originating end user's call is delivered by Iowa Network to and acknowledged as received by the customer's facilities connected with an Iowa Network premises. On the terminating end of an intrastate call, usage is measured from the time the call is received by the end user in the terminating exchange. Timing of usage at both originating and terminating ends of an intrastate call shall terminate when the calling or called party disconnects, whichever event is recognized first in the originating and terminating exchanges, as applicable.

Access Tandem

The term "Access Tandem" denotes a switching system that provides a concentration and distribution function for originating and terminating traffic between end offices and a customer's premises.

2. General Regulations (Cont'd)

2.6 Definitions (Cont'd)

Ancillary Service or Equipment

The term "Ancillary Service or Equipment" denotes any communication service or equipment not included in the definition of transmission service, terminal equipment or existing or new inside station wiring.

Answer/Disconnect Supervision

The term "Answer/Disconnect Supervision" denotes the transmission of the switch trunk equipment supervisory signal (off-hook or on-hook) to the customer's point of interconnection as an indication that the called party has answered or disconnected.

Attenuation Distortion

The term "Attenuation Distortion" denotes the difference in loss at specified frequencies relative to the loss at 1004 Hz, unless otherwise specified.

Average Busy-Season, Busy-Hour Traffic

The term "Average Busy-Season, Busy-Hour Traffic" denotes the average traffic volume for the busy-season, busy-hours.

Balance (100 Type) Test Line

The term "Balance (100 Type) Test Line" denotes an arrangement which provides for balance and noise testing.

2. General Regulations (Cont'd)

2.6 Definitions (Cont'd)

Bit

The term "Bit" denotes the smallest unit of information in the binary system of notation.

Board

The term "Board" denotes the Iowa State Utilities Board.

Business Day

The term "Business Day" denotes the time of day that a company is open for business. Generally, in the business community, these are 8:00 or 9:00 A.M. to 5:00 or 6:00 P.M., respectively, with an hour for lunch, Monday through Friday, resulting in a standard forty (40) hour work week. However, Business Day hours for Iowa Network may vary based on company policy, union contract and location. To determine such hours for an individual company, or company location, that company should be contacted.

Busy-Hour

The term "Busy-Hour" denotes the two consecutive half hours during which the greatest volume of traffic is handled by Iowa Network's facilities.

Busy Hour Minutes of Capacity (BHMC)

The term "Busy Hour Minutes of Capacity (BHMC)" denotes the customer specified maximum amount of Switched Access Service access minutes the customer expects to be handled in an end office switch during any hour in an 8:00 A.M. to 11:00 P.M. period for the Feature Group ordered. This customer furnished BHMC quantity is the input data Iowa Network uses to determine the number of transmission paths for the Feature Group ordered.

2. General Regulations (Cont'd)

2.6 Definitions (Cont'd)

Busy-Season

The term "Busy-Season" denotes that period of the year during which the greatest volume of traffic is handled by Iowa Network's facilities.

Calls

The term "Calls" denotes telephone messages attempted by customers or users.

CCS

The term "CCS" denotes a hundred call seconds, which is a standard unit of traffic load that is equal to one hundred (100) seconds of usage or capacity of a group of servers (e.g., trunks).

Central Office

The term "Central Office" denotes a unit in an Exchange Telephone Company telephone system which provides service to the general public, having the necessary equipment and operating arrangements for terminating and interconnecting customer lines and trunks or trunks only. There may be more than one central office in a building.

Central Office Prefix

The term "Central Office Prefix" denotes the first three (3) digits (NXX) of the seven (7) digit telephone number assigned to a customer's Telephone Exchange Service when dialed on a local basis.

TARIFF LIBRARY
UTILITIES DIVISION

2. General Regulations (Cont'd)

2.6 Definitions (Cont'd)

Channel

The term "Channel" denotes an electrical path suitable for the transmission of communications.

Channelize

The term "Channelize" denotes the process of multiplexing-demultiplexing wider bandwidth or higher speed channels into narrower band-width or lower speed channels.

C-Message Noise

The term "C-Message Noise" denotes the frequency weighted average noise within an idle voice channel. The frequency weighting, called C-message, is used to simulate the frequency characteristic of the 500-type telephone set and the hearing of the average subscriber.

C-Notched Noise

The term "C-Notched Noise" denotes the C-message frequency weighted noise on a voice channel with a holding tone, which is removed at the measuring end through a notch (very narrow band) filter.

Common Channel Signaling Access Network (CCSAN) (N)

The term "CCSAN" refers to the network that allows call control information to be transmitted separately, or out-of-band, from the voice communications path. SS7 is the most recent protocol used for common channel signaling. (N)

Communications System

The term "Communications System" denotes channels and other facilities which are capable of communications between terminal equipment provided by other than Iowa Network.

2. General Regulations (Cont'd)

2.6 Definitions (Cont'd)

Customer(s)

The term "Customer(s)" denotes any person, firm, association, corporation, agency of the federal, state or local government, or legal entity responsible by law for payment for communications service from Iowa Network.

Data Transmission (107 Type) Test Line

The term "Data Transmission (107 Type) Test Line" denotes an arrangement which provides for a connection to a signal source which provides test signals for one-way testing of data and voice transmission parameters.

Decibel

The term "Decibel" denotes a unit used to express relative difference in power, usually between acoustic or electric signals, equal to ten (10) times the common logarithm of the ratio of two (2) signal powers.

Decibel Reference Noise C-Message Weighting

The term "Decibel Reference Noise C-Message Weighting" denotes noise power measurements with C-Message weighting in decibels relative to a reference 1000 Hz tone of 90 dB below one (1) milliwatt.

Decibel Reference Noise C-Message Referenced to 0

The term "Decibel Reference Noise C-Message Referenced to 0" denotes noise power in "Decibel Reference Noise C-Message Weighting" referred to or measured at a zero transmission level point.

2. General Regulations (Cont'd)

2.6 Definitions (Cont'd)

Delinquent or Delinquency

The term "Delinquent" or "Delinquency" denotes an account for which a bill or payment agreement for regulated services or equipment has not been paid in full on or before the last day for timely payment.

Detail Billing

The term "Detail Billing" denotes the listing of each message and/or rate element for which charges to a customer are due on a bill prepared by Iowa Network.

Disconnect

The term "Disconnect" denotes the disabling of circuitry preventing both outgoing and incoming communications.

Due Date

The term "Due Date" denotes the last day for payment without unpaid amounts being subject to a late payment charge or additional collection efforts.

Echo Control

The term "Echo Control" denotes the control of reflected signals in a transmission path.

Echo Path Loss

The term "Echo Path Loss" denotes the measure of reflected signal at a 4-wire point of interconnection without regard to the send and receive Transmission Level Point.

2. General Regulations (Cont'd)

2.6 Definitions (Cont'd)

Echo Return Loss

The term "Echo Return Loss" denotes a frequency weighted measure of return loss over the middle of the voiceband (approximately five hundred (500) to twenty-five hundred (2500) Hz), where talker echo is most annoying.

End Office Switch

The term "End Office Switch" denotes an Exchange Telephone Company switching system where Telephone Exchange Service customer station loops are terminated for purposes of interconnection to trunks. Included are Remote Switching Modules and Remote Switching Systems served by a host office in a different wire center.

End User

The term "End User" means any customer of an interstate or foreign telecommunications service that is not a carrier, except that a carrier other than a telephone company shall be deemed to be an "end user" when such carrier uses a telecommunications service for administrative purposes, and a person or entity that offers telecommunications service exclusively as a reseller shall be deemed to be an "end user" if all resale transmissions offered by such reseller originate on the premises of such reseller.

Entry Switch

See First Point of Switching.

Envelope Delay Distortion

The term "Envelope Delay Distortion" denotes a measure of the linearity of the phase versus frequency of a channel.

2. General Regulations (Cont'd)

2.6 Definitions (Cont'd)

Equal Level Echo Path Loss

The term "Equal Level Echo Path Loss" (ELEPL) denotes the measure of Echo Path Loss (EPL) at a 4-wire interface which is corrected by the difference between the send and receive Transmission Level Point (TLP) [ELEPL = EPL - TLP (send) + TLP (receive)].

Exchange

The term "Exchange" denotes a unit established by a telephone utility for the administration of communications services.

Exchange Service

The term "Exchange Service" denotes communication service furnished by means of exchange plant and facilities.

Exchange Service Area or Exchange Area

The terms "Exchange Service Area" or "Exchange Area" denote the general area in which the telephone utility holds itself out to furnish exchange telephone service.

Exchange Telephone Company

The term "Exchange Telephone Company" denotes a carrier that provides service within a telephone exchange, or within a connected system of telephone exchanges within the same exchange area operated to furnish to subscribers intercommunicating service of the character ordinarily furnished by a single exchange and which is covered by the exchange service charge.

2. General Regulations (Cont'd)

2.6 Definitions (Cont'd)

Expected Measured Loss

The term "Expected Measured Loss" denotes a calculated loss which specifies the end-to-end 1004 Hz loss on a terminated test connection between two (2) readily accessible manual or remote test points. It is the sum of the inserted connection loss and test access loss including any test pads.

Field Identifier

The term "Field Identifier" denotes two (2) or four (4) characters that are used on service orders to convey specific instructions. Field Identifiers may or may not have associated data. Selected Field Identifiers are used in billing systems to generate nonrecurring charges.

First Come - First Served

The term "First Come - First Served" denotes a procedure followed when a shortage of facilities or equipment occurs, such that a service ordered cannot be provided. The orders delayed by the shortage of facilities will be prioritized according to the sequence in which they were received. That is, when facilities or equipment become available, the first order received will be the first order processed.

First Point of Switching

The term "First Point of Switching" denotes the first Iowa Network location at which switching occurs on the terminating path of a call proceeding from the customer's premises to the terminating end office and, at the same time, the last Iowa Network location at which switching occurs on the originating path of a call proceeding from the originating end office to the customer's premises.

2. General Regulations (Cont'd)

2.6 Definitions (Cont'd)

Former Account

The term "Former Account" denotes a customer whose service has been permanently disconnected, and the final bill either has been paid or has been written off to the reserve for uncollectable accounts.

Frequency Shift

The term "Frequency Shift" denotes the change in the frequency of a tone as it is transmitted over a channel.

Grandfathered

The term "Grandfathered" denotes Terminal Equipment, Multiline Terminating Systems and Protective Circuitry directly connected to the facilities utilized to provide services under the provisions of this tariff, and which are considered Grandfathered under Part 68 of the F.C.C.'s Rules and Regulations.

Held Order for Service

The term "Held Order for Service" denotes an application for establishment of service not filled within thirty (30) days of the date the prospective customer desires service, provided preconditions have been met.

Home

The term "Home" refers to the directing of calls to a specific toll center location or Class 4 office.

Host Office

The term "Host Office" denotes an electronic switching system which provides call processing capabilities for one or more Remote Switching Modules or Remote Switching Systems.

2. General Regulations (Cont'd)

2.6 Definitions (Cont'd)

Immediately Available Funds

The term "Immediately Available Funds" denotes a corporate or personal check drawn on a bank account and funds which are available for use by the receiving party on the same day on which they are received and include U.S. Federal Reserve bank wire transfers, U.S. Federal Reserve notes (paper cash), U.S. coins, U.S. Postal Money Orders and New York Certificates of Deposit.

Impedance Balance

The term "Impedance Balance" denotes the method of expressing Echo Return Loss and Singing Return Loss at a 4-wire interface whereby the gains and/or loss of the 4-wire portion of the transmission path, including the hybrid, are not included in the specification.

Impulse Noise

The term "Impulse Noise" denotes any momentary occurrence of the noise on a channel over a specified level threshold. It is evaluated by counting the number of occurrences which exceed the threshold.

Inactive Account

The term "Inactive Account" denotes a customer whose service has been permanently disconnected and whose account has not been settled either by payment or refund.

Individual Case Basis

The term "Individual Case Basis" denotes a condition in which the regulations, if applicable, rates and charges for an offering under the provisions of this tariff are developed based on the circumstances in each case.

2. General Regulations (Cont'd)

2.6 Definitions (Cont'd)

Inserted Connection Loss

The term "Inserted Connection Loss" denotes the 1004 Hz power difference (in dB) between the maximum power available at the originating end and the actual power reaching the terminating end through the inserted connection.

Interexchange Carrier (IC) or Interexchange Common Carrier

The terms "Interexchange Carrier" (IC) or "Interexchange Common Carrier" denote any individual, partnership, association, joint-stock company, trust, governmental entity or corporation engaged for hire in interstate or foreign communications by wire or radio, between two (2) or more exchanges.

Interexchange Service

The term "Interexchange Service" denotes the provision of intrastate telecommunications services and facilities between local exchanges, and does not include extended area service.

Interexchange Utility

The term "Interexchange Utility" denotes a utility, a resale carrier or other entity that provides intrastate telecommunications services and facilities between exchanges within Iowa, without regard to how such traffic is carried. A local exchange utility that provides exchange service may also be considered an interexchange utility.

2. General Regulations (Cont'd)

2.6 Definitions (Cont'd)

Intermodulation Distortion

The term "Intermodulation Distortion" denotes a measure of the nonlinearity of a channel. It is measured using four (4) tones, and evaluating the ratios (in dB) of the transmitted composite four-tone signal power to the second-order products of the tones (R2), and the third-order products of the tones (R3).

Interstate Communications

The term "Interstate Communications" denotes both interstate and foreign communications.

Intrastate Access Services

The term "Intrastate Access Services" denotes services of telephone utilities which provide the capability to deliver intrastate toll calls which originate from end users to interexchange utilities and to deliver intrastate toll calls from interexchange utilities to end-users.

Intrastate Communications

The term "Intrastate Communications" denotes any communications within a state subject to oversight by a state regulatory commission as provided by the laws of the state involved.

Line-Side Connection

The term "Line-Side Connection" denotes a connection of a transmission path to the line side of a local exchange switching system.

2. General Regulations (Cont'd)

2.6 Definitions (Cont'd)

Local Access and Transport Area

The term "Local Access and Transport Area" denotes a geographic area established for the provision and administration of communications service. It encompasses one or more designated exchanges, which are grouped to serve common social, economic and other purposes.

Local Exchange Utility

The term "Local Exchange Utility" denotes a telephone utility that provides local service under tariff filed with the Board. The utility may also provide other services and facilities such as access services.

Local Service

The term "Local Service" denotes a telephone service furnished between customers or users located within an exchange area.

Local Tandem Switch

The term "Local Tandem Switch" denotes a local Telephone Company switching unit by which local or access telephonic communications are switched to and from an End Office Switch.

Loop Around Test Line

The term "Loop Around Test Line" denotes an arrangement to provide a means to make certain two-way transmission tests on a manual basis. This arrangement has two terminations, each reached by means of separate telephone numbers and does not require any specific customer equipment. Equipment subject to this test arrangement is at the discretion of the customer.

TARIFF LIBRARY
UTILITIES DIVISION

2. General Regulations (Cont'd)

2.6 Definitions (Cont'd)

Loss Deviation

The term "Loss Deviation" denotes the variation of the actual loss from the designed value.

Major Fraction Thereof

The term "Major Fraction Thereof" is any period of time in excess of one half (1/2) of the stated amount of time. As an example, in considering a period of twenty-four (24) hours, a major fraction thereof would be any period of time in excess of twelve (12) hours exactly. Therefore, if a given service is interrupted for a period of thirty-six (36) hours and fifteen (15) minutes, the customer would be given a credit allowance for two (2) twenty-four (24) hour periods for a total of forty-eight (48) hours.

Message

The term "Message" denotes a completed telephone call by a customer or user.

Milliwatt (102 Type) Test Line

The term "Milliwatt (102 Type) Test Line" denotes an arrangement which provides a 1004 Hz tone at 0 dBm0 for one-way transmission measurements towards the customer's point of interconnection from a Participating Telephone Company end office.

Minnesota Equal Access Network Services, Inc. (MEANS) (N)

The term "Minnesota Equal Access Network Services, Inc." denotes the SS7 provider who is cooperating with Iowa Network in the joint operation of the CCSAN. MEANS owns and operates an STP located in Plymouth, Minnesota, which is mated to the STP owned and operated by Iowa Network in Des Moines, Iowa. (N)

Certain regulations previously found on this page can now be found on 1st Revised Page 92.1

Issued: November 16, 1992 Effective: DEC 16 1992

By: William P. Bagley
General Manager
4201 Corporate Drive
West Des Moines, Iowa 50266

TARIFF LIBRARY
UTILITIES DIVISION

2. General Regulations (Cont'd)

2.6 Definitions (Cont'd)

Minnesota Independent Equal Access Corp. (MIEAC) (N)

The term "MIEAC" refers to a wholly-owned subsidiary of MEANS that provides centralized equal access service in Minnesota. (N)

Network Control Signaling (M)

The term "Network Control Signaling" denotes the transmission of signals used in the telecommunications system which perform functions such as supervision (control, status, and charge signals), address signaling (e.g., dialing), calling and called number identifications, (M)

Certain regulations found on this page formerly appeared on Original Page 92.

2. General Regulations (Cont'd)

2.6 Definitions (Cont'd)

Network Control Signaling (Cont'd)

rate of flow, service selection error control and audible tone signals (call progress signals indicating re-order or busy conditions, alerting, coin denominations, coin collect and coin return tones) to control the operation of the telecommunications system.

Nonsynchronous Test Line

The term "Nonsynchronous Test Line" denotes an arrangement which provides operational tests which are not as complete as those provided by the synchronous test lines, but can be made more rapidly.

North American Numbering Plan

The term "North American Numbering Plan" denotes a three-digit area (Numbering Plan Area) code and a seven-digit telephone number made up of a three-digit Central Office code plus a four-digit station number.

Off-Hook

The term "Off-hook" denotes the active condition of Switched Access or a Telephone Exchange Service line.

On-Hook

The term "On-hook" denotes the idle condition of Switched Access or a Telephone Exchange Service line.

Open Circuit Test Line

The term "Open Circuit Test Line" denotes an arrangement which provides an ac open circuit termination of a trunk by means of an inductor of several Henries.

2. General Regulations (Cont'd)

2.6 Definitions (Cont'd)

Originating Direction

The term "Originating Direction" denotes the use of Access Service for the origination of calls from an End User Premises to a Customer Premises.

Outside Plant

The term "Outside Plant" denotes the equipment and facilities installed, along, or under streets, alleys, highways, and private rights of way between customer locations, central offices, Iowa Network premises and customer locations, or Iowa Network premises and central offices.

Participating Telephone Company

The term "Participating Telephone Company" denotes the Exchange Telephone Company in whose exchange a customer's end users' end office is located and which routes calls to and from Iowa Network's facilities.

Pay Telephone

The term "Pay Telephone" denotes Exchange Telephone Company provided instruments and related facilities that are available to the general public for public convenience and necessity, including public and semi-public telephones, and coinless telephones.

Percentage of Fill

The term "Percentage of Fill" denotes the ratio of circuits and equipment in use to the total available multiplied by 100.

2. General Regulations (Cont'd)

2.6 Definitions (Cont'd)

Phase Jitter

The term "Phase Jitter" denotes the unwanted phase variations of a signal.

Point of Interconnection

The term "Point of Interconnection" denotes the demarcation point or network interface, at which Iowa Network's responsibility for the provision of Access Service ends.

Premises

The term "Premises" denotes a building, or a portion of a building in a multi-tenant building, or buildings on continuous property (except Railroad Right-of-Way, etc.) not separated by a public highway.

Remote Switching Modules and/or Remote Switching Systems

The terms "Remote Switching Modules" and/or "Remote Switching Systems" denote small, remotely controlled electronic end office switches which obtain their call processing capability from an ESS-type Host Office. The Remote Switching Modules and/or Remote Switching Systems cannot accommodate direct trunks to a customer.

Return Loss

The term "Return Loss" denotes a measure of the similarity between the two (2) impedances at the junction of two (2) transmission paths. The higher the return loss, the higher the similarity.

2. General Regulations (Cont'd)

TARIFF LIBRARY
UTILITIES DIVISION

2.6 Definitions (Cont'd)

Registered Equipment

The term "Registered Equipment" denotes the customer's premises equipment which complies with and has been approved within the Registration Provisions of Part 68 of the F.C.C.'s Rules and Regulations.

Service Access Code

The term "Service Access Code" denotes a three digit code in the NPA format which is used as the first three digits of a ten digit address and which is assigned for special network uses. Whereas NPA codes are normally used for identifying specific geographical areas, certain Service Access Codes have been allocated in the North American Numbering Plan to identify generic services or to provide access capability. Examples of Service Access Codes include the 800 and 900 codes.

Service Control Point (SCP) (N)

The term "Service Control Point" denotes the CCS/SS7 network node that acts as a host for various database applications and provides switching, routing, and call handling information.

Service Switching Point (SSP)

The term "Service Switching Point" denotes a switching office or node on the CCS/SS7 network which has the ability to launch queries to a centralized on-line database such as the 800 Database and the Line Information Database (LIDB). The SSP also performs all of the functions of the SP. (N)

Serving Wire Center

The term "Serving Wire Center" denotes the wire center from which the customer premises would normally obtain dial tone from an Exchange Telephone Company.

Certain regulations previously found on this page can now be found on 1st Revised Page 96.1.

TARIFF LIBRARY
UTILITIES DIVISION

2. General Regulations (Cont'd)

2.6 Definitions (Cont'd)

Seven Digit Manual Test Line (M)

The term "Seven Digit Manual Test Line" denotes an arrangement which allows the customer to select balance, milliwatt and synchronous test lines by manually dialing a seven (7) digit number of the associated access connection. (M)

Shortage of Facilities or Equipment

The term "Shortage of Facilities or Equipment" denotes a condition which occurs when Iowa Network does not have appropriate cable, switching capacity, bridging or multiplexing equipment, etc., necessary to provide the Access Service requested by the customer.

Short Circuit Test Line

The term "Short Circuit Test Line" denotes an arrangement which provides for an ac short circuit termination of a trunk by means of a capacitor of at least four (4) microfarads.

Signaling Network Access Connection (SNAC) (N)

The term "Signaling Network Access Connection" denotes the link between the Signaling Point of Interconnection (SPOI) and the INS/MEANS STPs. The connection also includes the necessary ports on the INS/MEANS STPs.

Signaling Point of Interconnection (SPOI)

The term "Signaling Point of Interconnection" denotes the point of interconnection between Iowa Network and the customer for purposes of exchanging SS7 signaling messages. The SPOIs are located in the metropolitan areas of Des Moines, Iowa and Minneapolis/St. Paul, Minnesota. (N)

Certain regulations found on this page formerly appeared on 1st Revised Page 96.

TARIFF LIBRARY
UTILITIES DIVISION

2. General Regulations (Cont'd)

2.6 Definitions (Cont'd)

Signal Point (SP) (N)

The term "Signal Point" denotes a node on the CCS/SS7 network that converts non-SS7 signals to SS7 protocol, sends and receives messages from one node to another in order to establish and disconnect calls. (N)

Signal-to-C-Notched Noise Ratio

The term "Signal-to-C-Notched Noise Ratio" denotes the ratio in dB of a test signal to the corresponding C-Notched Noise.

Signal Transfer Point (STP) (N)

The term "Signal Transfer Point" denotes a packet switch that routes signaling messages between SPs, SSPs, and SCPs. Iowa Network in conjunction with MEANS provides a geographically separated mated pair of STPs for connection to the customer's SS7 network. The STPs are located in Des Moines, Iowa and Plymouth, Minnesota. (N)

Singing Return Loss

The term "Singing Return Loss" denotes the frequency weighted measure of return loss at the edges of the voiceband (200 to 500 Hz and 2500 to 3200 Hz), where singing (instability) problems are most likely to occur.

Subtending End Office of an Access Tandem

The term "Subtending End Office of an Access Tandem" denotes an end office that has final trunk group routing through that tandem.

Suspend

The term "Suspend" denotes temporary disconnection or impairment of service which shall disable either outgoing or incoming communications, or both.

Certain regulations previously found on this page can now be found on Original Page 97.1.

TARIFF LIBRARY
UTILITIES DIVISION

2. General Regulations (Cont'd)

2.6 Definitions (Cont'd)

Switching Service (M)

The term "Switching Service" denotes switching performed for service lines.

Synchronous Test Line

The term "Synchronous Test Line" denotes an arrangement which performs marginal operational tests of supervisory and ring-tripping functions. (M)

Certain regulations found on this page formerly appeared on Original Page 97.

2. General Regulations (Cont'd)

2.6 Definitions (Cont'd)

Tariff

The term "Tariff" denotes the entire body of regulated rates, tolls, rentals, charges, classifications, rules, procedures, policies, etc., adopted and filed with the Board by a telephone utility in fulfilling its role of furnishing communications service.

Telephone Utility or Utility

The terms "Telephone Utility" or "Utility" denotes any person, partnership, business association, or corporation, domestic or foreign, owning or operating any facilities for furnishing communications service to the public for compensation.

Terminating Direction

The term "Terminating Direction" denotes the use of Access Service for the completion of calls from an IC Premises to an End User Premises.

Timely Payment

The term "Timely Payment" denotes a payment on a customer's account made on or before the due date shown: (1) On a current bill for rates and charges or (2) by an agreement between the customer and a utility for a series of partial payments to settle a delinquent account.

Toll Connecting Trunks

The term "Toll Connecting Trunks" denotes a general classification of trunks carrying toll traffic and ordinarily extending between a local office and a toll office.

2. General Regulations (Cont'd)

2.6 Definitions (Cont'd)

Toll Message

The term "Toll Message" denotes a message made between different exchange areas for which a charge is made, excluding message rate service charges.

Toll Rate

The term "Toll Rate" denotes the tariff charge prescribed for toll messages, usually based upon the duration of the message, the distance between the exchanges, the day and time of the message and the degree of operator assistance.

Toll Station

The term "Toll Station" denotes a telephone connected to a toll line or directly to a toll board.

Toll Station Service

The term "Toll Station Service" denotes telephone service rendered from a toll station.

Traffic

The term "Traffic" denotes telephone call volume, based on number and duration of calls.

Traffic Grade of Service

The term "Traffic Grade of Service" denotes the decimal fraction representing the probability of a call being blocked by an all-trunks-busy condition during the average busy-season, busy-hour.

2. General Regulations (Cont'd)

2.6 Definitions (Cont'd)

Transmission Measuring (105 Type) Test Line/Responder

The term "Transmission Measuring (105 Type) Test Line/ Responder" denotes an arrangement which provides far-end access to a responder and permits two-way loss and noise measurements to be made on trunks from a near end office.

Transmission Path

The term "Transmission Path" denotes an electrical path capable of transmitting signals within the range of the service offering, e.g., a voice grade transmission path is capable of transmitting voice frequencies within the approximate range of three hundred (300) to three thousand (3000) Hz. A transmission path is comprised of physical or derived channels consisting of any form or configuration of facilities plant typically used in the telecommunications industry.

Transmission Service

The term "Transmission Service" denotes the common carrier provision of exchange access, switching, exchange transmission, intraexchange transmission and interexchange transmission, including private line service.

Trouble Report

The term "Trouble Report" denotes any call or written statement from a customer or user of telephone service relating to a physical defect or to difficulty or dissatisfaction with the operation of telephone facilities.

Trunk

The term "Trunk" denotes a transmission path connecting two (2) switching systems in a network, used in the establishment of an end-to-end connection.

2. General Regulations (Cont'd)

2.6 Definitions (Cont'd)

Trunk Group

The term "Trunk Group" denotes a set of trunks which are traffic engineered as a unit for the establishment of connections between switching systems in which all of the communications paths are interchangeable.

Trunk-Side Connection

The term "Trunk-Side Connection" denotes the connection of a transmission path to the trunk side of a switching system.

Two-Wire to Four-Wire Conversion

The term "Two-Wire to Four-Wire Conversion" denotes an arrangement which converts a four-wire transmission path to a two-wire transmission path to allow a four-wire facility to terminate in a two-wire entity (e.g., a central office switch).

V and H Coordinates Method

The term "V and H Coordinates Method" denotes a method of computing airline miles between two points by utilizing an established formula which is based on the vertical and horizontal coordinates of the two points.

Wire Center

The term "Wire Center" denotes a building in which one or more central offices, used for the provision of Telephone Exchange Services, are located.

3. Services Not Currently Offered By Iowa Network Under This Tariff

3.1 The services listed below are not currently offered by Iowa Network under this Access Service tariff.

A. Carrier Common Line Access Service

B. Directories

C. Directory Assistance Service or Operator Services.

D. Exchange Service or Local Service

E. Extended Area Service Arrangements

F. Extensions

G. Feature Group A Switched Access Service

H. Installation or Maintenance of Inside Wiring

I. Intercept

J. Special Construction

K. Temporary Service as described in Iowa Admin. Code r. 199-22.4(8)

L. Terminal Equipment

4. RECORDING

(A) Iowa Network will provide Recording Service in association with the offering of Feature Groups C and D Switched Access Service for customer messages that can be recorded by Iowa Network provided automatic message accounting equipment. Iowa Network will provide Recording Service in its operating territory and to the end office(s) of the Participating Telephone Companies listed in Section 9. following.

(B) A customer message begins in the originating direction when the off-hook supervision provided by the premise of the ordering customer is received by Iowa Network recording equipment. A customer message begins in the terminating direction when answer supervision is received by Iowa Network recording equipment indicating the called party has answered. A customer message ends in the originating direction when disconnect supervision is received by Iowa Network recording equipment from the premise of the ordering customer. A customer message ends in the terminating direction when disconnect supervision is received by Iowa Network recording equipment from either the premise of the ordering customer or the called party.

(C) General Description

(1) Recording Service is the recording of the details of a customer message and, when requested by the customer, the provision of those details to the customer. Recording Service includes recording, assembly and editing, and provision of recorded customer message detail.

4. RECORDING (Cont'd)

(C) General Description (Cont'd)

(2) Recording is the entering on magnetic tape or other acceptable media the details of customer messages originated through Switched Access Service for which answer and disconnect supervision has been received. Recording is provided 24 hours a day, 7 days a week.

(3) Assembly and editing is the aggregation of the recorded customer message details to create individual messages and the verification that the data required for rating, in accordance with the standard format established by Iowa Network, is present. Assembly and editing is performed at least once a week.

(4) Provision of customer message detail is the provision of magnetic tape containing the assembled and edited customer message detail and when requested by the customer, data-transmitting the assembled and edited customer message detail to the customer, sorting the message detail, and providing name and address information for the message detail. Except for lost or damaged records, the recorded detail will be available to the customer not more than five (5) business days after the date all the detail requested by the customer was processed by Iowa Network.

(D) Undertaking of Iowa Network

(1) Iowa Network will record all customer messages carried over Feature Groups C and D Switched Access Service that are available to Iowa Network provided recording equipment or operators. Iowa Network will record all customer messages. Unavailable customer messages (i.e.,

4. RECORDING (Cont'd)

(D) Undertaking of Iowa Network (Cont'd)

(1) (Cont'd)

certain Feature Group C operator and TSPS messages which are not accessible by Iowa Network provided recording equipment or operators) will not be recorded. The recording equipment will be provided at locations selected by Iowa Network. Assembly and editing will be performed on all customer messages recorded during the billing period established by Iowa Network. Except as set forth in Sections 4(D)(6) and 4(E) the following recorded message detail from previous billing periods will not be recovered and made available to the customer.

(2) A standard format for the provision of the recorded customer message detail will be established by Iowa Network and provided to the customer. If, in the course of Iowa Network business, it is necessary to change the format, Iowa Network will notify the involved customers six (6) months prior to the change.

(3) The recorded customer message detail provided to the customer will, when requested by the customer, be sorted to furnish detail to meet the customer's need.

Also name and address information will, when requested by the customer and to the extent the required names and addresses are available in the Iowa Network customer information databases, be provided for the recorded customer message detail.

4. RECORDING (Cont'd)

(D) Undertaking of Iowa Network (Cont'd)

(3) (Cont'd)

The sorting will be provided in accordance with the specifications the customer provides when it orders recorded customer message detail with sorting. If the information necessary to sort the recorded message detail as requested by the customer is not available in the recorded message detail (i.e., a sort based on any other information other than calling number or called number), Iowa Network will provide the sorting if (1) the information necessary to perform the sort is contained in its customer information databases, or the Wire Center Information as set forth in Exchange Carrier Association Tariff F.C.C. No. 4, or (2) the customer provides the necessary information. If the sorting is to be performed using information which is confidential due to legal, national security, end user or regulatory-imposed requirements, the information will not be used unless the customer secures written permission from the end user for Iowa Network to use such information as requested by the customer.

The name and address information will be provided with the recorded customer message detail and included on the magnetic tapes containing the recorded customer message detail. The name and address information will be provided in a format in accordance with the specifications the customer provides when it orders recorded customer message detail. The name and address information will be obtained by Iowa Network from its customer information databases. The

4. RECORDING (Cont'd)

(D) Undertaking of Iowa Network (Cont'd)

(3) (Cont'd)

name and address information will be provided for the calling number shown in the recorded customer message detail to the extent a name and address exists in the Iowa Network customer information databases (e.g., some calling number names and addresses may be confidential). If the name and address information for a specific calling number is confidential due to legal, national security, end user or regulatory-imposed requirements, the name and address information will not be used unless the customer secures written permission from the end user for Iowa Network to use the information as requested by the customer.

When sorting of recorded customer message detail and/or name and address information is provided to the customer, and interval, minimum period and charges to provide the sorting and/or name and address information will be determined on an individual case basis.

(4) Recorded customer message detail with or without sorting and names and addresses will be provided to a customer as set forth in (5) following. Iowa Network will determine the number of magnetic tapes or data files required to provide the recorded message detail to the customer.

4. RECORDING (Cont'd)

(D) Undertaking of Iowa Network (Cont'd)

(5) At the request of a customer, magnetic tapes containing the recorded customer message details with or without sorting and names and addresses will be provided to the customer as part of Recording Service. The magnetic tapes will be provided without the return of previously supplied tapes. Iowa Network will supply the magnetic tapes. Unless specified otherwise by the customer, the magnetic tapes will be sent to the customer via first class U.S. Mail service. However, the customer may pick up the magnetic tapes at a location designated by Iowa Network or request that the detail on the magnetic tapes or in a data file be data-transmitted to the customer. When the recorded customer message details are data-transmitted to a customer premise, the data transmission charges will be determined on an individual case basis. When the customer does not wish to receive the recorded customer message details, except when sorting and name and address information is provided, and Iowa Network receives notice from the customer at least two (2) weeks prior to the date the details would be sent to the customer, the rate as set forth in Section 4.(I)(3) following does not apply. When the customer does not wish to receive the recorded customer message detail, the terms and conditions will be as set forth in the individual case basis agreement.

4. RECORDING (Cont'd)

(D) Undertaking of Iowa Network (Cont'd)

(6) Recorded customer messsage detail, which is used at the request of the customer to provide Message Processing and Message Bill Processing Service, is not retained by Iowa Network for longer than forty-five (45) days. The rated but unbilled message detail and the billed message detail is retained for reference (i.e., on paper or microfiche in place of the recorded customer message detail). For recorded customer message detail not used by Message Processing Service at the customer's request, Iowa Network will make every reasonable effort to recover recorded customer message detail previously made available to the customer and make it available again for the customer. The rates and charges as set forth in Section 4(I)(3) following will apply for all such detail provided. When the recorded customer message details are data-transmitted to a customer premise, the data transmission rates will be determined on an individual case basis. Such a request must be made within thirty (30) days from the date the details were initially made available to the customer.

(E) Liability of Iowa Network

Iowa Network's liability for Recording Service is as follows:

(1) If customer message detail is not available because Iowa Network lost or damaged tapes or incurred recording system outages, Iowa Network will estimate the volume of lost customer messages and associated revenue based on previously

4. RECORDING (Cont'd)

(E) Liability of Iowa Network (Cont'd)

(1) (Cont'd)

known values. This estimated customer message volume will be included along with the customer message detail provided to the customer and/or provided for Message Processing Service. In such events the extent of Iowa Network's liability for damages shall be limited to the granting of a corresponding credit adjustment to the customer amount due to account for the unbillable revenue.

(2) When Iowa Network is notified that, due to error or omission, incomplete data have been provided to a customer, Iowa Network will make every reasonable effort to locate and/or recover the data and provide new magnetic tapes to the customer at no additional charge. Such request to recover the data must be made within thirty (30) days from the date the details were initially made available to the customer. If the data cannot be recovered, the extent of Iowa Network's liability for damages shall be limited as set forth in (1) preceding.

(3) In the absence of willful misconduct, no liability for damages to the customer or other person or entity other than as set forth in (1) or (2) preceding shall attach to Iowa Network for its action or the conduct of its employees in providing Recording Service.

4. RECORDING (Cont'd)

(F) Obligations of the Customer

(1) The customer shall order Recording Service under a Special Order for each state where the service is desired.

The customer shall order Recording Service at least one (1) month prior to the date when the customer message detail is to be recorded.

(2) The customer shall order provision of recorded customer message detail without sorting or name and address information at least one (1) month prior to the date when it wishes to receive the recorded message detail. However, the customer may wish to receive magnetic tapes of the recorded customer message detail without sorting or name and addres information or have the recorded detail data-transmitted to a customer premises at some times and not at others. Therefore, changes in the provision of recorded customer message detail without sorting and name and address information to the customer will be accommodated provided the customer gives two (2) weeks advance written notification to Iowa Network.

For recorded customer message detail with sorting and/or name and address information, the customer shall order the detail in accordance with the terms and conditions of the individual case basis established and filed in this tariff to cover the provision of recorded customer message detail with sorting and/or name and address information.

4. RECORDING (Cont'd)

(F) Obligations of the Customer (Cont'd)

(3) The premises of the ordering customer shall provide such signals as may be required for the proper operation of Iowa Network's automatic message accounting equipment used to perform the detail recordings.

(G) Payment Arrangements and Audit Provision

(1) Audit Provision: Upon reasonable written notice by the customer to Iowa Network, the customer shall have the right through its authorized representative to examine and audit, during normal business hours and at reasonable intervals as determined by Iowa Network, all such records and accounts as may, under recognized accounting practices, contain information bearing upon the recording of messages for which amounts may be payable to the customer. Adjustment shall be made by the proper party to compensate for any errors or omissions disclosed by such examination or audit. Neither such right to examine and audit nor the right to receive such adjustment shall be affected by any statement to the contrary, appearing on checks or otherwise, unless such statement expressly waiving such right appears in a letter signed by the authorized representative of the party having such right and delivered to the other party.

All information received or reviewed by the customer or its authorized representative is to be considered confidential and is not to be distributed, provided or disclosed in any form to anyone not involved in the audit, nor is such information to be used for any other purpose.

4. RECORDING (Cont'd)

(G) Payment Arrangements and Audit Provision

(2) Minimum Period and Minimum Monthly Charge: The minimum period for which Recording Service without sorting and/or name and address information is provided and for which charges apply is one (1) month for each state in which the service is ordered.

The minimum monthly charges are the charges for customer messages recorded, customer messages assembled and edited (except when Message Processing Service is ordered for the same monthly period) and when ordered by the customer, provision of customer message detail without sorting and/or name and address information on magnetic tape or data files. If the service is cancelled or discontinued prior to entering the customer message detail on magnetic tapes or data files, the minimum monthly charge will be the charge for all customer messages recorded, assembled and edited for a thirty (30)-day period. Iowa Network will use the most recent 30-day period for which data is available to determine the minimum charge.

(3) Cancellation of a Special Order: A customer may cancel a Special Order for Recording Service on any date prior to the service date. The cancellation date is the date Iowa Network receives written or verbal notice from the customer that the Special Order is to be cancelled. The verbal notice must be followed by written confirmation within ten (10) days. The service date for Recording Service is the date the customer requests the recordings to start.

4. RECORDING (Cont'd)

(G) Payment Arrangements and Audit Provision (Cont'd)

(3) (Cont'd)

When a customer cancels a Special Order for Recording Service after the order date but prior to the start of service, the minimum monthly charges will apply.

(4) Changes to Special Orders: When a customer requests material changes to a pending Special Order for Recording Service, the pending Special Order will be cancelled and the requested changes will be undertaken if they can be accommodated by Iowa Network under a new Special Order. Material changes to a pending Special Order for Recording Services includes changes in the location and/or number of Iowa Network recording locations, changes in sorting parameters, provision of end user phone number and address, provision of data transmission to a customer location of customer recorded message detail, and changes in schedules, dates or intervals for receipt of customer recorded message detail. Non-material changes to a pending Special Order include changes in customer name, customer address and customer requests to receive Recording Service output at the Iowa Network location instead of through U.S. Mail. All cancellation charges as set forth in (3) preceding will apply for the cancelled Special Order.

RPU- 88-2

IOWA TARIFF NO. 1
ACCESS SERVICE

4. RECORDING (Cont'd)

(H) Rate Regulations

(1) For each customer message recorded, the recording and the assembling and editing charges apply except when the customer orders Message Processing Service. When Message Processing Service is ordered for the same state and month that Recording Service is ordered, the assembling and editing charge does not apply per customer message.

The charges for recording and for assembling and editing apply per message recorded and per message assembled and edited whether or not the customer's schedule of rates specifies billing on a per message basis or any other basis.

(2) The per Special Order charge applies for each Special Order accepted by Iowa Network for Recording Service.

(3) When message detail, with or without sorting and/or name and address information is entered on a data file or magnetic tape for provision of message detail to a customer, the per tape charge applies for each data file or magnetic tape prepared, and the per record charge applies for each record processed. A record is a logical grouping of information as described in the programs that process the information and load the magnetic tapes or data file. Iowa Network will determine the charges based on the number of data files or magnetic tapes prepared and on its count of the records processed. The number of records processed will be determined using the number of records input to or the number of records output from the programs that process the information and load the magnetic tapes or data file, whichever number of records is higher.

4. RECORDING (Cont'd)

(I) Rates and Charges

The rates and charges are:

	USCC	Rates
(1) Recording -	BARR	
- per customer message		$0.014
- per Special Order		$24.85
(2) Assembling and editing -	BANA++	ICB rates and charges apply
- per customer message		
(3) Provision of customer message detail -		
- unsorted without name and address information, per record processed	BAC++	ICB rates and charges apply
- sorted output without name and address information, per record processed	BFT++	ICB rates and charges apply
- unsorted output with name and address information, per record processed	BFQ++	ICB rates and charges apply
- sorted output with name and address information, per record processed	BFS++	ICB rates and charges apply
- per tape or data file	BFP++	$17.48
(4) Data transmission to a customer location -		
- per record transmitted	BTS++	$0.0084

By: William P. Bagley
General Manager
Suite 140
2700 Westown Parkway
West Des Moines, Iowa 50265

5. Ordering Options for Switched Access Service

5.1 General

This section sets forth the regulations and other related charges for Access Orders for Switched Access Service. These charges are in addition to other applicable charges as set forth in other sections of this Tariff.

An Access Order is an order to provide the customer with Switched Access Service or to provide changes to existing services.

5.1.1 Ordering Conditions

Switched Access Service may be ordered from Iowa Network between the points of interconnection set forth in Section 8. following. A customer may order any number of services of the same type (e.g., Feature Group, Interface Group, etc.), between Iowa Network's central access tandem and a customer point of interconnection set forth in Section 8. following. Switched Access Service between a customer's premises and the points of interconnection set forth in Section 8. following is solely the responsibility of the customer and must be provided by the customer or ordered from another carrier. Switched Access Service from the points of interconnection set forth in Section 8. following to an end office must be ordered from a Participating Telephone Company or other Exchange Telephone Company. Iowa Network will determine the facilities to be provided between an Iowa Network premises set forth in Section 8. following and Iowa Network's central access tandem on the basis of the capacity ordered.

TARIFF LIBRARY
UTILITIES DIVISION

5. Ordering Options for Switched Access Service (Cont'd)

5.1 General (Cont'd)

5.1.1 Ordering Conditions (Cont'd)

The customer shall supply all the necessary information to provide service, (e.g., customer name and point of interconnection location, customer end user contact and premises location, facility interface, etc.).

When the customer orders FGD service with the CCSA option described in 6.1.1(D) and 6.1.3(B)(3) following, the customer shall provide additional information for the Signaling Network Access Connection such as STP Point codes, location identifier codes and circuit identification codes, etc., as required by Iowa Network. For FGD ordered with the CCSA option, the customer shall work cooperatively with Iowa Network to determine the configuration of SS7 Signaling Network Access Connections required to handle its signaling traffic. Iowa Network, in cooperation with MEANS, shall have the final authority for managing the joint network and ensuring optimal utilization of the SNACs including link and port facilities. (N)

5.1.2 Provision of Other Services

Orders for Switched Access Service between Iowa Network's central access tandem and the points of interconnection set forth in Section 8. following shall be in both Originating and Terminating BHMCs.

(A) Testing Service, Additional Labor, Restoration Priority, and other services offered under the provisions of this tariff shall be ordered with an Access Order or as set forth in (B) following. The rates and charges for these services, as set forth in other sections of this tariff, will

Certain regulations previously found on this page can now be found on Original Page 118.1.

TARIFF LIBRARY
UTILITIES DIVISION

5. Ordering Options for Switched Access Service (Cont'd)

5.1 General (Cont'd)

5.1.2 Provision of Other Services (Cont'd) (M)

(A) (Cont'd)

apply in addition to the ordering charges set forth in this section and the rates and charges for the Access Service with which they are associated.

(B) With the agreement of Iowa Network, the items listed in (A) preceding may subsequently be added to the order at any time, up to and including the service date for the Access Service. When added subsequently, charges for a design change as set forth in 5.2.2(C) following will apply when an engineering review is required. (M)

Certain regulations found on this page formerly appeared on Original Page 118.

5. Ordering Options for Switched Access Service (Cont'd)

5.1 General (Cont'd)

5.1.2 Provision of Other Services (Cont'd)

(C) Additional Engineering is not an ordering option, but will be applied to an Access Order when Iowa Network determines Additional Engineering is necessary to accommodate a customer request. When Additional Engineering is required, the customer will be so notified and will be furnished with a written statement setting forth the justification for the Additional Engineering as well as an estimate of the charges. If the customer agrees to the Additional Engineering, a firm order will be established. If the customer does not want the service or facilities after being notified that Additional Engineering is required, the order will be withdrawn and no charges will apply. Once a firm order has been established, the total charge to the customer for the Additional Engineering may not exceed the estimated amount by more than ten percent (10%).

The regulations, rates and charges for Additional Engineering are as set forth in 13.1 following and are in addition to the regulations, rates and charges specified in this section.

5.1.3 Reserved for Future Use

TARIFF LIBRARY
UTILITIES DIVISION

5. Ordering Options for Switched Access Service (Cont'd)

5.2 Access Order

An Access order is used by Iowa Network to provide to a customer Access Service as follows:

- Switched Access Services as set forth in Section 6. following.

- Other Services as set forth in Section 5.1.2 preceding.

When placing an order for Access Service, the customer shall provide, at a minimum, the following information:

- For Feature Groups B and D Switched Access Service, the customer shall specify the number of busy hour minutes of capacity (BHMC) needed to carry traffic between the end office of a Participating Telephone Company set forth in Section 9. following and the customer's point of interconnection set forth in Section 8. following. Both the originating and terminating minutes shall be included. Feature Groups B and D Switched Access Service is furnished as two-way traffic. Originating only and terminating only access service is not offered under this tariff for Feature Groups B or D. The basic traffic type must also be specified using the same categories, as described in Section 6.1.1 following, to enable efficient provisioning and billing functions. This information is used to determine the number of transmission paths as set forth in 6.5.5 following. (C) (C) (C)

- For Interim NXX Translation, the customer must place an order with the company who provides the Interim NXX Translation. The customer must also provide a copy of the order to the Exchange Telephone Companies subtending the Interim NXX Translation office. The minimum territory for which Iowa Network will provide Interim

5. Ordering Options for Switched Access Service (Cont'd)

5.2 Access Order (Cont'd)

NXX Translation is all the appropriately equipped (C)
offices of the Participating Telephone Companies set
forth in Section 9. following for which the customer has
ordered Interim NXX Translation. Additionally, when new (C)
NXX(s) are to be opened up, or when such existing NXX(s)
are to be deleted, coincident with the provision of
Interim NXX Translation, the customer shall provide such (C)
information when placing the order for Interim NXX (C)
Translation. For additions and/or deletions of NXX(s)
at any other time, the customer shall place an order for
such additions and/or deletions. All NXX assignment and
administration shall be in accordance with the North
American Numbering Plan (NANP). Assignment(s) will be
made by the NANP Coordinator. Iowa Network will use (N)
the NXX code to identify the customer to whose point of
termination the traffic is to be delivered, (i.e., at
appropriately equipped electronic end offices, access
tandems or through contracted arrangements with other
parties). It is then the responsibility of the customer
to do any further translation the customer deems neces-
sary to route the call. Customer assigned NXX codes
which have not been ordered will be blocked. (N)

- When a customer desires Switched Access Service to an end office of a Participating Telephone Company set forth in Section 9. following that is a remote switching office, the customer must order from Iowa Network and send a copy of the order to the host office which controls the remote switching office. Iowa Network will work cooperatively with the customer to provide the required host office and/or remote switching office information.

The customer must supply a copy of the order to each (N)
carrier involved in providing the access service. (N)

Certain regulations previously found on this page can now be found on Original Page 121.1.

TF - 89-134
TARIFF LIBRARY
UTILITIES DIVISION

5. Ordering Options for Switched Access Service (Cont'd)

5.2 Access Order (Cont'd)

The BHMC may be determined by the customer in the following manner. For each average business day (i.e., 8 A.M. to 11 P.M., Monday through Friday, excluding national holidays), the customer shall determine the highest number of minutes of use for a single hour (e.g., 55 minutes in the 10-11 A.M. hour). The customer shall, for the same hour period (i.e., busy hour) for each of twenty (20) consecutive business days, pick the twenty (20) consecutive business days in a calendar year which add up to the largest number of minutes of use. Both originating and terminating minutes shall be (M) (M)

Certain regulations found on this page formerly appeared on Original Page 121.

5. Ordering Options for Switched Access Service (Cont'd)

5.2 Access Order (Cont'd)

included. The customer shall then determine the average busy hour minutes of capacity (i.e., BHMC) by dividing the largest number of minutes of use figure for the same hour period for the consecutive twenty (20) business day period by twenty (20). This computation shall be performed for each end office the customer wishes to serve. These determinations thus establish the forecasted BHMC for each end office.

5.2.1 Access Order Service Date Intervals

Access Service is provided with one of the following Service Date Intervals:

- Standard Interval
- Negotiated Interval

Whether the customer's service is subject to standard or negotiated intervals, Iowa Network will provide service interval tables and any associated relevant information to all customers within a reasonable time after a request.

To the extent the Access Service can be made available with reasonable effort, Iowa Network will provide the Access Service in accordance with the customer's requested interval, subject to the following conditions:

(A) Standard Interval

The day upon which the customer has provided to Iowa Network a firm commitment for the service and sufficient information to allow for the processing of the Access Order is the Application Date. On the Application Date, Iowa Network will establish a Service Date. The Service Date is

5. Ordering Options for Switched Access Service (Cont'd)

5.2 Access Order (Cont'd)

5.2.1 Access Order Service Date Intervals (Cont'd)

(A) Standard Interval (Cont'd)

the date on which service is to be made available to the customer. The time required to provision the service (i.e., the interval between the Application Date and the Service Date) is known as the service interval. Standard interval tables and associated information will be provided to customers upon request within a reasonable period of time.

Access Services provided in a Standard Interval will be installed during normally scheduled work hours. If a customer requests that installation be done outside of scheduled work hours, and Iowa Network agrees to this request, the customer will be subject to applicable Additional Labor Charges as set forth in 13.2.6(A) following.

(B) Negotiated Interval

The customer may request a service date other than that established pursuant to the standard order service interval guidelines, and Iowa Network, where possible, will establish a negotiated order service date in accordance with such request.

Iowa Network will negotiate a service date interval with the customer when:

(1) There is no Standard Interval for the service, or

5. Ordering Options for Switched Access Service (Cont'd)

5.2 Access Order (Cont'd)

5.2.1 Access Order Service Date Intervals (Cont'd)

(B) Negotiated Interval (Cont'd)

(2) The customer requests a service date before or beyond the applicable Standard Interval service date, or

(3) The quantity of Access Services ordered exceeds the quantities specified in the Standard Intervals.

Iowa Network will offer a service date based on the type and quantity of Access Services the customer has requested. The Negotiated Interval may not exceed by more than six (6) months the Standard Interval Service date, or, when there is no Standard Interval, the Iowa Network offered service date. All services for which rates are applied on an individual case basis are provided with a Negotiated Interval.

5.2.2 Rates and Charges Associated With Access Ordering

An Access Order may be modified by the customer prior to the service date as set forth following. One or more of the following charges will apply when such modifications are undertaken. When modifications are undertaken, Iowa Network shall specify if, in order to complete the requested modifications with the normal work force assigned to complete such an order in

5. Ordering Options for Switched Access Service (Cont'd)

5.2 Access Order (Cont'd)

5.2.2 Rates and Charges Associated With Access Ordering (Cont'd)

normal work hours, the service date will be changed. All charges for Access Order modifications will apply on a per occurrence basis.

Any increase in the number of busy hours minutes of capacity will be treated as a new Access Order (for the increased amount only).

(A) Service Date Change Charge

Access Order service dates may be changed, but the new service date may not exceed the original service date by more than thirty (30) calendar days. When, for any reason, the customer indicates that service cannot be accepted for a period not to exceed thirty (30) calendar days, and Iowa Network accordingly delays the start of service, a Service Date Change Charge will apply. If the customer requested service date is more than thirty (30) calendar days after the original service date, the order will be cancelled by Iowa Network and reissued with the appropriate cancellation charges applied unless the customer indicates that billing for the service is to commence as set forth in 5.2.3(A) following. If Iowa Network determines it can accommodate the customer's request without delaying service dates for orders of other customers, a new service date may be established that is prior to the original standard or negotiated interval service date.

5. Ordering Options for Switched Access Service (Cont'd)

5.2 Access Order (Cont'd)

5.2.2 Rates and Charges Associated With Access Ordering (Cont'd)

(A) Service Date Change Charge (Cont'd)

If the service date is changed to an earlier date, and Iowa Network determines additional labor or extraordinary costs are necessary to meet the earlier service date requested by the customer, the customer will be notified by Iowa Network that Expedited Order Charges as set forth in (D) following apply. Such charges will apply in addition to the Service Date Change Charge.

A Service Date Change Charge will apply, on a per order per occurrence basis, for each service date changed. The applicable charge is:

	Charge
Service Date Change Charge, per order	$27.00

(B) Partial Cancellation Charge

Any decrease in the number of ordered busy hours minutes of capacity will be treated as a partial cancellation and the charges as set forth in 5.2.3.(B) following will apply.

5. Ordering Options for Switched Access Service (Cont'd)

5.2 Access Order (Cont'd)

5.2.2 Rates and Charges Associated With Access Ordering (Cont'd)

(C) Design Change Charge

The customer may request a design change to the service ordered. A design change is any change to an Access Order which requires engineering review. An engineering review is a review by Iowa Network personnel, of the service ordered and the requested changes to determine what changes in the design, if any, are necessary to meet the changes requested by the customer. Design changes include such things as the addition or deletion of optional features or functions or a change in the type of channel interface, type of Interface Group or technical specification package. Design changes do not include a change of customer point of interconnection, end office switch, or Feature Group type.
Changes of this nature will require the issuance of a new order and the cancellation of the original order with appropriate cancellation charges applied.

Iowa Network will review the requested change, notify the customer whether the change is a design change, if it can be accommodated and if a new service date is required. If the customer authorizes Iowa Network to proceed with the design change, a Design Change Charge will apply in addition to the charge for Additional Engineering as set forth in 13.1 following. If a

5. Ordering Options for Switched Access Service (Cont'd)

5.2 Access Order (Cont'd)

5.2.2 Rates and Charges Associated With Access Ordering (Cont'd)

(C) Design Change Charge (Cont'd)

change of a service date is required, the Service Date Change Charge as set forth in (A) preceding will also apply. The Design Change Charge will apply on a per order per occurrence basis, for each order requiring a design change. The applicable charge is:

	Rate
Design Change Charge, per order	$27.00

(D) Expedited Order Charge

When placing an Access Order, a customer may request a service date that is prior to the standard interval service date. A customer may also request an earlier service date on a pending standard or negotiated interval Access Order. If Iowa Network determines that service can be provided on the requested date and that additional labor cost are required to meet the requested service date, the customer will be notified and will be provided with an estimate of the additional charges involved. Charges will be billed at actual cost, not to exceed 10 percent over estimated charges. Such additional charges will be determined and billed to the customer as follows:

5. Ordering Options for Switched Access Service (Cont'd)

5.2 Access Order (Cont'd)

5.2.2 Rates and Charges Associated With Access Ordering (Cont'd)

(D) Expedited Order Charge (Cont'd)

To calculate the additional labor charges, Iowa Network will, upon authorization from the customer to incur the additional labor charges, keep track of the additional labor hours used to meet the request of the customer and will bill the customer at the applicable Additional Labor charges as set forth in 13.2.6(A) following.

When the request for expediting occurs subsequent to the issuance of the Access Order, a Service Date Change Charge as set forth in (A) preceding also applies.

(E) Access Order Charge

The Access Order Charge is applied to all customer requests for new Switched Access Service. In addition, the Access Order Charge is applicable to customer requests for additions, changes or rearrangements to existing Switched Access Service with the following exceptions: the Access Order Charge does not apply:

5. Ordering Options for Switched Access Service (Cont'd)

5.2 Access Order (Cont'd)

5.2.2 Rates and Charges Associated With Access Ordering (Cont'd)

(E) Access Order Charge (Cont'd)

- When a Service Date Change Charge is applicable.
- When a Design Change Charge is applicable.
- When an Expedited Order Charge is applicable.
- When a change to a pending order does not result in the cancellation of the pending order and the issuance of a new order.
- When Interim NXX Translation is ordered. (C)
- When a Miscellaneous Service Order Charge is applicable.

The Access Order Charge will be applied on a per order basis to each order received by Iowa Network or a copy of an order received by Iowa Network pursuant to 5.2 preceding and is in addition to other applicable charges as set forth in this and other sections of this tariff.

Access Order Charge per order	Rate $70.00

(F) Miscellaneous Service Order Charge

A Miscellaneous Service Order Charge, applies to any service, or combination of services ordered simultaneously from Section 13. of this tariff for which a service

5. Ordering Options for Switched Access Service (Cont'd)

5.2 Access Order (Cont'd)

5.2.2 Rates and Charges Associated With Access Ordering (Cont'd)

(F) Miscellaneous Service Order Charge (Cont'd)

order is not already pending. The Miscellaneous Service Order Charge is an administrative charge designed to compensate for the expenses associated with service order issuance.

The charge always applies to the following services since a pending service order would not exist:

- Overtime Repair (13.2.2),
- Stand-by Repair (13.2.3),
- Testing And Maintenance With Other Telephone Companies other than when in conjunction with Acceptance Testing (13.2.4),
- Other Labor (13.2.5),
- Maintenance Of Service (13.3.1).

The charge does not apply to the following services since there would exist a pending service order:

- Additional Engineering (13.1),
- Overtime Installation (13.2.1),
- Stand-by Acceptance Testing (13.2.3),
- Testing And Maintenance With Other Telephone Companies when in conjunction with Acceptance Testing (13.2.4),
- Additional Cooperative Acceptance Testing (13.3.4(A)(1)).

5. Ordering Options for Switched Access Service (Cont'd)

5.2 Access Order (Cont'd)

5.2.3 Cancellation of an Access Order

(A) A customer may cancel an Access Order for the installation of service on any date prior to the service date. The cancellation date is the date Iowa Network receives written or verbal notice from the customer that the order is to be cancelled. The verbal notice must be followed by written confirmation within ten (10) days. If a customer is unable to accept Access Service within thirty (30) calendar days of the original service date, the customer has the choice of the following options:

- The Access Order shall be cancelled and charges set forth in (B) following will apply, or

- Billing for the service will commence.

If no cancellation request is received within the specified thirty (30) calendar days, billing for the service will commence.

In such instances, the cancellation date or the billing date, depending on which option is selected by the customer, shall be the thirty-first (31st) day beyond the original service date of the Access Order.

(B) When a customer cancels an Access Order for the installation of service, a Cancellation Charge will apply as follows:

5. Ordering Options for Switched Access Service (Cont'd)

5.2 Access Order (Cont'd)

5.2.3 Cancellation of an Access Order (Cont'd)

(B) (Cont'd)

(1) Installation of Switched Access Service facilities is considered to have started when Iowa Network incurs any cost in connection therewith or in preparation thereof which would not otherwise have been incurred.

(2) Where the customer cancels an Access Order prior to the start of installation of access facilities, no charges shall apply.

(3) Where installation of access facilities has been started prior to the cancellation, the charges specified in (a) or (b) following, whichever is lower, shall apply.

(a) A charge equal to the costs incurred in such installation, less estimated net salvage. Such charge is determined as detailed in (4) following.

(b) The charge for the minimum period of Switched Access Service ordered by the customer.

5. Ordering Options for Switched Access Service (Cont'd)

5.2 Access Order (Cont'd)

5.2.3 Cancellation of an Access Order (Cont'd)

(B) (Cont'd)

(4) Charges applicable as specified in (3)(a) preceding include the non-recoverable cost of equipment and material ordered, provided or used, plus the nonrecoverable cost of installation and removal including the costs of engineering, labor, supervision, transportation, rights-of-way and other associated costs.

(C) When a customer cancels an order for the discontinuance of service, no charges apply for the cancellation.

(D) If Iowa Network misses a service date by more than thirty (30) days due to circumstances over which it has direct control (excluding, e.g., acts of God, governmental requirements, work stoppages and civil commotions), the customer may cancel the Access Order without incurring cancellation charges.

5.2.4 Selection of Facilities for Access Orders

(A) For all Access Orders, the option to request a specific transmission path is not provided.

TARIFF LIBRARY
UTILITIES DIVISION

5. Ordering Options for Switched Access Service (Cont'd)

5.2 Access Order (Cont'd)

5.2.5 Minimum Period

(A) The minimum period for which Access Service is provided and for which charges are applicable, is one (1) month.

(B) Administrative Changes as set forth in 6.7.1(B) following for Switched Access Service may be made without a change in minimum period requirements.

(C) Changes other than those identified in 6.7.1(B) following will be treated as a discontinuance of the existing service and an installation of a new service. All associated nonrecurring charges will apply for the new service. A new minimum period will be established for the new service. The customer will also remain responsible for all outstanding minimum period obligations associated with the disconnected service.

The changes listed below are those which will be treated as a discontinuance and installation of service and for which a new minimum period will be established.

(1) A change in type of service (i.e., one type of Switched Access Feature Group to another except as set forth in 6.7.5 following),

(2) A change in the service to reconfigure FGD trunks to add or discontinue SS7 signaling capability. (N) | (N)

TF - 90-185

TARIFF LIBRARY
UTILITIES DIVISION

5. Ordering Options for Switched Access Service (Cont'd)

5.2 Access Order (Cont'd)

5.2.6 Minimum Period Charges

When Access Service is disconnected prior to the expiration of the minimum period, rates and charges are applicable for the balance of the minimum period. A disconnect constitutes facilities being returned to available inventory.

The Minimum Period Charge for monthly billed services will be determined as follows:

(A) For Switched Access Service, the charge for a month or fraction thereof is equal to the applicable recurring charges plus any (C)
nonrecurring charge(s) that may be due. (C)

5.2.7 Reserved for Future Use

5. Ordering Options for Switched Access Service (Cont'd)

5.3 Available Inventory

Available inventory is limited and does not include facilities used to provide working services or facilities previously ordered, reserved for pending orders or held as maintenance spare. Available inventory is the Iowa Network and Participating Telephone Company facilities (e.g., loop pairs, interoffice pairs, carrier channels, circuit equipment, trunk equipment, and switching equipment) in place, when the customer places an order, or under construction to be ready to meet future customer orders. The available date for facilities under construction is the date such facility construction is completed, including line up and testing, and made available to meet customer needs. Iowa Network will make every reasonable effort to maintain sufficient available inventory to provide Access Service in accordance with customers' requested service date intervals. To the extent that service can be provided, Access Orders will be satisfied from available inventory.

5. Ordering Options for Switched Access Service (Cont'd)

5.4 Access Orders for Services Provided by Iowa Network and Exchange Telephone Companies

(A) Access Services provided by Iowa Network and Exchange Telephone Companies are services where one end of the Local Transport element is in the operating territory of an Exchange Telephone Company and Iowa Network provides a portion or all of the facilities between two or more of the Iowa Network premises listed in Section 8. following or where the Interim NXX Translation (N)
service is provided by Iowa Network. Iowa (N)
Network will coordinate and arrange for the provision of the services ordered. In addition to the rates and charges billed by Iowa Network as set forth in Section 6. following, each Exchange Telephone Company will provide the portion of the Local Transport element in its operating territory and will bill its charges.

(1) When Switched Access Services are ordered to Iowa Network's central access tandem, the customer will place the order with Iowa Network. The customer must also supply a copy of the order to each Exchange Telephone Company involved in providing the service and subtending Iowa Network's central access tandem.

(2) When Switched Access Services are ordered to a point of interconnection listed in Section 8. following other than Iowa Network's central access tandem, the customer will place the order as follows:

TARIFF LIBRARY
UTILITIES DIVISION

5. Ordering Options for Switched Access Service (Cont'd)

5.4 Access Orders for Services Provided by Iowa Network and Exchange Telephone Companies (Cont'd)

(A) (Cont'd)

(2) (Cont'd)

(a) For Feature Group B Switched Access Service, the customer must place the order with Iowa Network. The customer must also supply a copy of the order to each Exchange Telephone Company involved in providing the service and subtending Iowa Network's central access tandem.

(b) For Feature Group D Switched Access Service, the customer must place the order with the Exchange Telephone Company in whose territory the end office is located. The customer must also supply a copy of the order to Iowa Network. (C) (C)

(3) For the Switched Access Services ordered set forth in (1) and (2) preceding, the customer must also supply a copy of the order to the Exchange Telephone Company in whose operating territory a customer premises is located and any other Exchange Telephone Company involved in providing the service.

(4) For initiation, additions, changes or deletions to the Interim NXX Translation code(s), the customer must place an order with the carrier who provides the Interim NXX Translation. The customer must also provide a copy of the order to the Exchange Telephone Companies subtending the Interim NXX Translation office.

TARIFF LIBRARY
UTILITIES DIVISION

5. Ordering Options for Switched Access Service (Cont'd)

5.4 Access Orders for Services Provided by Iowa Network and Exchange Telephone Companies (Cont'd)

(A) (Cont'd)

(4) (Cont'd)

When Feature Group D is ordered with the Interim NXX Translation optional feature, the customer shall specify the Service Access Code(s) (e.g., 800 or 900) and their associated NXX Code(s) to be translated within the entire LATA or Market Area. The initial and subsequent orders to add, change, or delete Interim NXX Translation codes shall be placed separately or in combination with orders to change Feature Group D Switched Access BHMC. Customer assigned NXX codes which have not been ordered will be blocked. (C) (C)

Orders for the Interim NXX Translation optional feature shall not be required until such time as a customer other than an MTS/WATS provider requests Interim NXX Translation of Service Access Codes. Upon receipt of such order, Iowa Network shall notify the MTS/WATS provider of the activation of the Interim NXX Translation Service for the Service Access Code. Following such initial activation, all customers are required to place orders for Interim NXX Translation of the Service Access Code and the Interim NXX Translation charge for the Service Access Code shall apply as set forth in 6.8.4 following.

TF - 90-185

TARIFF LIBRARY
UTILITIES DIVISION

6. Switched Access Service

6.1 General

Switched Access Service, when combined with the services offered by Exchange Telephone Companies, is available to customers for their use in furnishing their services to end users. Iowa Network provides a two-point electrical communications path between a point of interconnection with the transmission facilities of an Exchange Telephone Company at a location listed in Section 8. following and Iowa Network's central access tandem where the customer's traffic is switched to originate or terminate its communications. It also provides for the switching facilities at Iowa Network's central access tandem. Iowa Network's central access tandem is Iowa Network's switching system located in Des Moines, Iowa that provides the software for equal access and a concentration and distribution function for originating and terminating traffic between the end offices of Participating Telephone Companies listed in Section 9. following and a customer's point of interconnection set forth in Section 8. following. The customer's point of interconnection is the demarcation point or network interface between Iowa Network's communications facilities and customer provided facilities.

Rates and charges for Switched Access Service are set forth in 6.8 following. The application of rates for Switched Access Service is described in 6.1.3 and 6.7 following.

6.1.1 Access Service Arrangements and Manner of Provision

Switched Access Service is provided in two service categories called Feature Groups. These are differentiated by their technical characteristics and the manner in which an end user accesses them in originating calling, e.g., with (C)

TARIFF LIBRARY
UTILITIES DIVISION

6. Switched Access Service (Cont'd)

6.1 General (Cont'd)

6.1.1 Access Service Arrangements and Manner of Provision (Cont'd)

or without an access code. Centralized Equal Access Service is provided with Feature Group D and terminating Feature Group B Switched Access Service. In addition, Common Channel Signaling (C)
Access and Interim NXX Translation is available (C)
with Feature Group D Switched Access Service. Following is a brief description of each Feature Group arrangement, Centralized Equal Access Service, and the CCSA and Interim NXX Translation (C)
optional features.

(A) Centralized Equal Access Service

Customer's ordering Feature Group D and terminating Feature Group B Switched Access Service will receive Centralized Equal Access Service. Centralized Equal Access Service provides the concentration and distribution function for originating and terminating Feature Group D traffic and terminating Feature Group B traffic between the exchanges of the Participating Telephone Companies listed in Section 9.1 following and one or more of the Iowa Network premises set forth in Section 8. following. Centralized Equal Access Service enable the end users in these exchanges to originate calls to a customer using a uniform 10XXX access code or, if the end user's telephone or exchange service is arranged for presubscription to that customer, to originate calls to that customer with no access code. Centralized Equal Access Service also provides a

TARIFF LIBRARY
UTILITIES DIVISION

6. Switched Access Service (Cont'd)

6.1 General (Cont'd)

6.1.1 Access Service Arrangements and Manner of Provision (Cont'd)

(A) Centralized Equal Access Service (Cont'd)

centralizing function for terminating traffic that is similar to the centralizing function that it provides for originating traffic. A customer receiving Centralized Equal Access Service is able to terminate its Feature Group B and Feature Group D calls in the exchanges of the Participating Telephone Companies listed in Section 9. following by merely connecting at one or more of the Iowa Network premises listed in Section 8. following. For this terminating traffic, Centralized Equal Access Service will provide the measurement of actual terminating minutes of use. (C)

(B) Feature Group B (FGB)

FGB Access, which is available to all customers, provides trunk side access at a customer's point of interconnection with an associated uniform 950-0XXX or 950-1XXX access code for the customer's use in originating communications. In addition, the measurement of actual minutes of use is provided with FGB Access in the terminating direction. A more detailed description of FGB Access is Provided in 6.2.2 following. (D) | (D)

TARIFF LIBRARY
UTILITIES DIVISION

6. Switched Access Service (Cont'd)

6.1 General (Cont'd)

6.1.1 Access Service Arrangements and Manner of Provision (Cont'd)

(C) Feature Group D (FGD)

FGD Access, which is available to all customers, provides trunk side access at a customer's point of interconnection with an associated uniform 10XXX access code for the customer's use in originating and terminating communications unless a Participating Telephone Company's end office is unable to provide a uniform 10XXX code. The end offices of Participating Telephone Companies that are unable to provide a uniform 10XXX code are set forth in Section 6.2.4 following. In addition, the measurement of actual terminating minutes of use is provided with FGD Access in the terminating direction. A more detailed description of FGD Access is provided in 6.2.4 following.

(D) Joint Provision of Common Channel Signaling Access (CCSA) (N)

CCSA is a nonchargeable optional feature available with FGD access service. CCSA allows the customer to establish a connection with the Iowa Network/MEANS jointly operated CCSAN at the Signaling Points of Interconnection (SPOIs) in the metropolitan areas of Des Moines, Iowa and Minneapolis/St. Paul, Minnesota for transporting call control information. Transmission specifications, diversity requirements, and testing parameters meet or exceed industry standards. (N)

TARIFF LIBRARY
UTILITIES DIVISION

6. Switched Access Service (Cont'd)

6.1 General (Cont'd)

6.1.1 Access Service Arrangements and Manner of Provision (Cont'd)

(D) Joint Provision of Common Channel Signaling Access (CCSA) (Cont'd) (N)

An STP in Des Moines, Iowa will be owned and operated by Iowa Network, for CCSA in Iowa while an STP in Plymouth, Minnesota will be owned and operated by MEANS for CCSA in Minnesota. However, Iowa Network and MEANS will cooperate to provide redundancy to their respective CCSA networks. Iowa Network and MEANS will jointly provide the SNACs which include the ports on Iowa Network and MEANS STPs and the link facilities between the STPs.

The CCSAN consists of a mated pair of STPs which operate completely parallel to each other, a pair of diverse facilities connecting the STPs, and access links to each of the local telephone company SP/SSPs from each STP. This configuration ensures network reliability by providing geographic diversity and redundancy of signal switching and transport.

Iowa Network will provide the signaling facilities between the Iowa Network Routing Exchange Carrier end offices and the Des Moines, Iowa STP. MEANS will provide the signaling facilities between the MEANS Routing Exchange Carrier end offices and the Plymouth, Minnesota STP. The interstate facilities connecting the two STPs will be jointly provided by Iowa Network and MEANS. The access link to the MEANS STP from the Iowa Network Routing Exchange Carrier end (N)

UTILITIES DIVISION

6. Switched Access Service (Cont'd)

6.1 General (Cont'd)

6.1.1 Access Service Arrangements and Manner of Provision (Cont'd)

(D) Joint Provision of Common Channel Signaling Access (CCSA) (Cont'd) (N)

offices is provided by Iowa Network to the centralized access tandem and then jointly by Iowa Network and MEANS to the MEANS STP. Likewise, the access link to the Iowa Network STP from the MEANS Routing Exchange Carriers is provided over MEANS facilities to the MEANS centralized equal access tandem, and then over jointly provided facilities to the Iowa Network STP.

The interexchange carrier is responsible for the signaling facilities from the interexchange carrier's STPs, which shall consist of a quad (4) of 56 Kbps links, to the SPOIs on the Iowa Network/MEANS network. Iowa Network and MEANS will each provide a pair of Signaling Network Access Connections (SNACs) which includes any facilities required between the Iowa Network/MEANS STPs and the interexchange carrier SPOIs and the ports on the mated STPs. An interexchange carrier who wishes to connect a single SP or SSP to the CCSAN may do so by providing a pair of 56 Kbps links, one to a SPOI in Des Moines, and one to the SPOI in Minneapolis/St. Paul, and Iowa Network and MEANS will provide the corresponding SNACs.

The use of the SNAC and the STP Port will be bidirectional in that SS7 message sequences may be originated from either the interexchange carrier's network or from the (N)

6. Switched Access Service (Cont'd)

6.1 General (Cont'd)

6.1.1 Access Service Arrangements and Manner of Provision (Cont'd)

(D) Joint Provision of Common Channel Signaling Access (CCSA) (Cont'd) (N)

INS network. The message sequences initiated from the INS network may include ISDN User Part (ISUP) messages, Transaction Capabilities Application Part (TCAP) messages, in support of functions such as 800 Database queries and Line Information Data Base (LIDB) queries, and other messages in support of services for which the networks of both the interexchange carrier and Iowa Network are used.

The following diagram illustrates how the Iowa Network/MEANS SS7 network will interconnect with the interexchange carrier's network, independent of the voice Centralized Equal Access communications path. (N)

6. Switched Access Service (Cont'd)

6.1 General (Cont'd)

6.1.1 Access Service Arrangements and Manner of Provision (Cont'd)

(D) Joint Provision of Common Channel Signaling Access (CCSA) (Cont'd) (N)

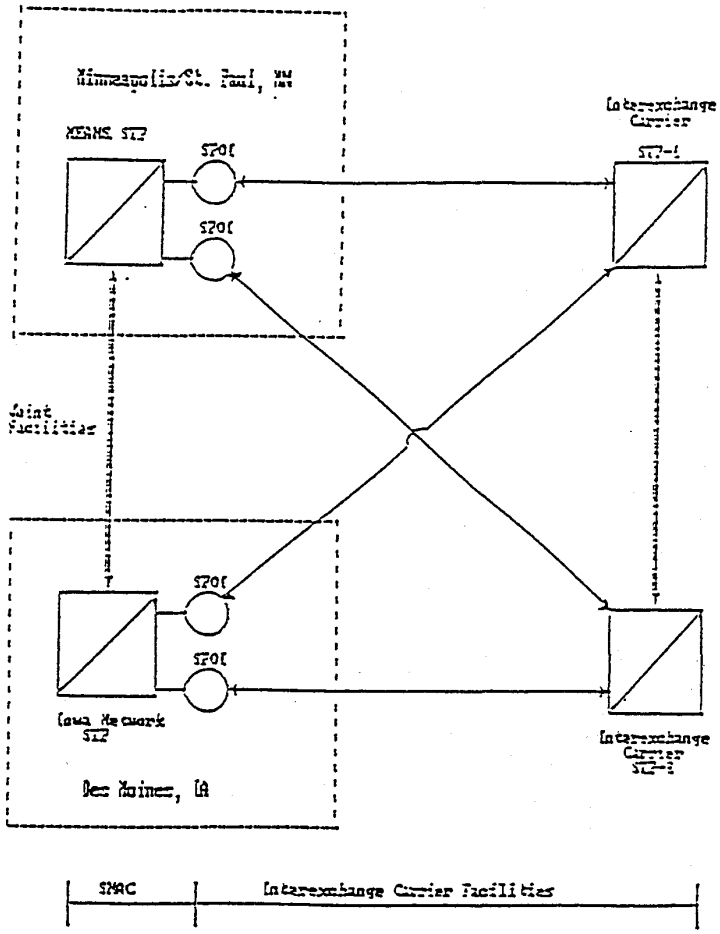

SMAC - Signaling Network Access Connection
SPOI - Signaling Point of Interconnection
STP - Signal Transfer Point (N)

6. Switched Access Service (Cont'd)

6.1 General (Cont'd)

6.1.1 Access Service Arrangements and Manner of Provision (Cont'd)

(E) Interim NXX Translation (C)

The Interim NXX Translation optional feature is an originating offering utilizing trunk side Switched Access Service and provides a customer identification function based on the dialed SAC and NXX code. (C) (C) (C)

For example, when an 1+800+NXX-XXXX or an 1+900+NXX+XXXX call is originated by an end user, Iowa Network or a Participating Telephone Company will perform the customer identification function based on the dialed digits to determine the customer location to which the call is to be routed. If the call originates from an end office switch not equipped to provide the customer identification function, the call will be routed to an end office at which the function is available or Iowa Network's central access tandem. Once customer identification has been established, the call will be routed to the customer. Calls originating from an end office switch at which the customer identification function is performed, but to which the customer has not ordered Interim NXX Translation, will be blocked. Calls to a 900 number from coin telephones, 0+, 0-, 10XXX, Inmate Service, Hotel/Motel Service and calling card calls will be blocked. (C) (C) (C) (C)

The charge for Interim NXX Translation is as set forth in Section 6.8.4 following. (N) (N)

TARIFF LIBRARY
UTILITIES DIVISION

6. Switched Access Service (Cont'd)

6.1 General (Cont'd)

6.1.1 Access Service Arrangement and Manner of Provision (Cont'd)

(F) Manner of Provision

Switched Access is furnished in both Originating and Terminating BHMCs. Iowa Network will determine the facilities to be provided on the basis of the busy hour minutes of capacity ordered as set forth in 5.2 preceding. Feature Groups B and D (C) Switched Access Service is furnished as a two-way access service between the customer's premises and the points of interconnection set forth in Section 8. following. Originating only and terminating only Feature Groups B and D access service is not offered (C) under this tariff.

BHMCs are differentiated by type and directionality of traffic carried over a Switched Access Service arrangement. Diferentiation of traffic among BHMC types is necessary for Iowa Network to properly design Switched Access Service to meet the traffic carrying capacity requirement of the customer.

There are two major BHMC categories identified as: Originating and Terminating. Originating BHMCs represent access capacity for carrying traffic from the end user to the customer's point of interconnection set forth in Section 8. following. Terminating BHMCs represent access capacity for carrying traffic from the customer's point of interconnection set forth in Section 8.

TARIFF LIBRARY
UTILITIES DIVISION

6. Switched Access Service (Cont'd)

6.1 General (Cont'd)

6.1.1 Access Service Arrangements and Manner of Provision (Cont'd)

(F) Manner of Provision (Cont'd)

following to the end user. When ordering capacity for Switched Access Service, the customer must at a minimum specify such access capacity in terms of both Originating BHMCs and Terminating BHMCs.

Because some customers will wish to further segregate their originating traffic into separate trunk groups, Originating BHMCs are further categorized into Domestic, 800, 900, and IDDD. Domestic BHMCs represent access capacity for carrying only domestic traffic other than 800 and 900 traffic; IDDD BHMCs represent access capacity for carrying only international traffic; and, 800 and 900 BHMCs represent access capacity for carrying, respectively, only 800 and 900 traffic. When ordering such types of access capacity, the customer must specify Domestic, 800, 900, or IDDD BHMCs.

6.1.2 Reserved for Future Use (C)

(D)
|
(D)

6. Switched Access Service (Cont'd)

6.1 General (Cont'd)

TARIFF LIBRARY
UTILITIES DIVISION

6.1.3 Rate Categories

There are four rate categories which apply to Switched Access Service: (C)

- Centralized Equal Access Service (described in 6.1.3(A) following)
- Switched Transport (described in 6.1.3(B) following)
- Non-chargeable Optional Features (described in 6.1.3(B)(2) following) (N) (N)
- Chargeable Optional Features (described in 6.1.3(C) following)

(A) Centralized Equal Access Service

The Centralized Equal Access Service rate category establishes the charges related to the transmission and tandem switching facilities that provide a concentration and distribution function for originating and terminating traffic between an Iowa Network premise listed in Section 8. following and Iowa Network's central access tandem. Centralized Equal Access Service is assessed on a per access minute basis at the rate set forth in 6.8.1 following. This Centralized Equal Access Service rate is applicable to Feature Group D Switched Access Service in both the originating and terminating directions and to Feature Group B Switched Access Service in the terminating direction only.

TARIFF LIBRARY
UTILITIES DIVISION

6. Switched Access Service (Cont'd)

6.1 General (Cont'd)

6.1.3 Rate Categories (Cont'd)

(A) Centralized Equal Access Service (Cont'd)

(D)

(D)

The Centralized Equal Access Service rate applies to all terminating traffic. The application of the Centralized Equal Access rate to each feature group is described in Sections 6.7.1(D) and 6.7.1(E) following.

(B) Switched Transport

Switched Transport is a High Capacity (1.544 Mbps) frequency transmission path composed of facilities determined by Iowa Network. The two-way frequency transmission path permits the transport of calls as follows:

(1) In the originating direction from an Iowa Network premises set forth in Section 8. following to Iowa Network's central access tandem, when the customer's point of interconnection is located at Iowa Network's central access tandem.

(2) In the terminating direction, from Iowa Network's central access tandem to an Iowa Network premises set forth in Section 8. following when the customer's point of interconnection is located at Iowa Network's central access tandem.

6. Switched Access Service (Cont'd)

6.1 General (Cont'd)

6.1.3 Rate Categories (Cont'd)

(B) Switched Transport (Cont'd)

(3) In both the originating and terminating directions, between two Iowa Network premises set forth in Section 8. following that are not located at Iowa Network's central access tandem.

The Switched Transport rate category establishes the rate related to the transmission and tandem switching facilities used to provide the transport of calls as described above. Switched Transport is assessed on a per access minute per mile basis at the rate set forth in Section 6.8.3 following. The application of the Switched Transport rate to each Feature Group is described in Sections 6.7.1(D) and 6.7.1(E) following.

Switched Transport is provided by Iowa Network at a customer's point of interconnection. A customer's point of interconnection may be located at Iowa Network's central access tandem or another Iowa Network premises as set forth in Section 8. following.

International dialing may be provided as a capability associated with Feature Group D. International dialing provides the capability of switching international calls with service prefix and address codes having more digits than are capable of being switched through standard FGD equipment.

6. Switched Access Service (Cont'd)

6.1 General (Cont'd)

6.1.3 Rate Categories (Cont'd)

(B) Switched Transport (Cont'd)

(1) Interface Groups

One Interface Group is provided for terminating the Switched Transport at the customer's point of interconnection: Interface Group 6. Where transmission facilities permit, the individual transmission path between Iowa Network's central access tandem and another Iowa Network premises listed in Section 8. following may at the option of the customer be provided with optional features as set forth in (2)(a) and (b) following.

Interface Group 6 is provided with Type A or B Transmission Specifications depending on the Feature Group. All Interface Groups are provided with Data Transmission Parameters.

Only certain interfaces are available at the customer's point of interconnection. The various interfaces which are available are set forth in 1(j) following and Section 15.1.11.

(a) Reserved for Future Use

(b) Reserved for Future Use

6. Switched Access Service (Cont'd)

6.1 General (Cont'd)

6.1.3 Rate Categories (Cont'd)

(B) Switched Transport (Cont'd)

(1) Interface Groups (Cont'd)

(c) Reserved for Future Use

(d) Reserved for Future Use

(e) Reserved for Future Use

(f) Interface Group 6

Interface Group 6 provides DS1 level digital transmission at the the customer's point of interconnection. The interface is capable of transmitting electrical signals at a nominal 1.544 Mbps, with the capability to channelize up to twenty-four (24) voice frequency transmission paths. When analog switching utilizing analog terminations is provided, Iowa Network will provide multiplex and channel bank equipment to derive twenty-four (24) transmission paths of a frequency bandwidth of approximately three hundred (300) to three thousand (3000) Hz. When digital switching or analog switching with digital carrier terminations is provided, Iowa Network will provide a DS1 signal in D3/D4 format.

TARIFF LIBRARY
UTILITIES DIVISION

6. Switched Access Service (Cont'd)

6.1 General (Cont'd)

6.1.3 Rate Categories (Cont'd)

(B) Switched Transport (Cont'd)

(1) Interface Groups (Cont'd)

(f) Interface Group 6 (Cont'd)

The interface is provided with individual transmission path bit stream supervisory signaling.

(g) Reserved for Future Use

(h) Reserved for Future Use

(i) Reserved for Future Use

(j) Available Interface Codes
Following is a matrix showing which interface codes are available as a function of the switch supervisory signaling and Feature Group. For explanations of these codes, see the Glossary of Channel Interface Codes in 15.3.1 following.

Interface Group	Switch Supervisory Signaling	Interface Code	Feature Group B	Feature Group D	
6	RV, EA, EB, EC	4DS9-15	X	X	(C)
	RV, EA, EB, EC	4DS9-15L	X	X	(C)

6. Switched Access Service (Cont'd)

6.1 General (Cont'd)

6.1.3 Rate Categories (Cont'd)

(B) Switched Transport (Cont'd)

(2) Nonchargeable Optional Features

Where transmission facilities permit, Iowa Network will, at the option of the customer, provide the following nonchargeable optional features in association with Switched Transport.

(a) Supervisory Signaling

Where the transmission parameters permit, and where signaling conversion is required by the customer to meet its signaling capability, the customer may order an optional supervisory signaling arrangement for each transmission path provided as follows:

Interface Group 6 may, at the option of the customer, be provided with individual transmission path SF supervisory signaling where such signaling is available in Iowa Network's central access tandem. Generally, such signaling is available only where Iowa Network's central access tandem provides an analog, i.e., non-digital, interface and a portion of the facility provided by the customer between Iowa Network's central access tandem and the customer's premises is analog.

TARIFF LIBRARY
UTILITIES DIVISION

6. Switched Access Service (Cont'd)

6.1 General (Cont'd)

6.1.3 Rate Categories (Cont'd)

(B) Switched Transport (Cont'd)

(2) Nonchargeable Optional Features (Cont'd)

(b) Customer Specified Entry Switch Receive Level

This feature allows the customer to specify the receive transmission level at Iowa Network's central access tandem. The range of transmission levels which may be specified is described in Technical Reference TR-NPL-000334. This feature is available for Feature Group B.

(c) Joint Provision of Common Channel Signaling Access (CCSA) (N)

There are no recurring charges for this feature. If the customer requests Iowa Network to reconfigure FGD trunks with inband signaling to provide FGD service with the CCSA option, the request will be treated as a discontinuance of existing service and the installation of a new service and the installation charges set forth in 6.8.4(A) following will apply on a per SNAC basis. (N)

Certain regulations previously found on this page can now be found on 2nd Revised page 155.

TARIFF LIBRARY
UTILITIES DIVISION

6. Switched Access Service (Cont'd)

6.1 General (Cont'd)

6.1.3 Rate Categories (Cont'd)

(C) Chargeable Optional Features (M)

Where facilities permit, Iowa Network will, at the option of the customer, provide the following chargeable optional features.

(1) Interim NXX Translation

The Interim NXX Translation rate element provides for customer identification when calls are directed by end users in the 1+SAC+NXX-XXXX format. The NXX codes are assigned to specific customers in conformance with the North American Numbering Plan (NANP). NXX code assignment(s) will be made by the Bellcore NANP Coordinator. Iowa Network will use the NXX code to identify the customer to whose point of termination the traffic is to be delivered (i.e., at appropriately equipped electronic end offices, access tandems or through contracted arrangements with other parties). It is then the responsibility of the customer to do any further translation the customer deems necessary to route the call. Customer assigned NXX codes which have not been ordered will be blocked. A nonrecurring charge, as set forth in 6.8.4 following is associated with this optional feature. This nonrecurring charge is assessed by Iowa Network on a per order, per LATA or Market Area basis and is applied in lieu of the Access Order (M)

Certain regulations found on this page formerly appeared on 1st Revised Page 154.

Certain regulations previously found on this page can now be found on Original Page 155.1.

TARIFF LIBRARY
UTILITIES DIVISION

6. Switched Access Service (Cont'd)

6.1 General (Cont'd)

6.1.3 Rate Categories (Cont'd)

(C) Chargeable Optional Features (Cont'd) (M)

(1) Interim NXX Translation (Cont'd)

Charge specified in 5.2.2 preceding. The nonrecurring charge is assessed only by a company that provides the final translation function. A company is said to have provided the final Interim NXX Translation when its translation identifies the customer's traffic and this traffic is then delivered to the customer's point of termination without any further translation. The description and application of this charge with respect to Feature Group D is as set forth in 6.7.1(B)(2) following. (T)(M)

Certain regulations found on this page formerly appeared on 1st Revised Page 155.

6. Switched Access Service (Cont'd)

6.1 General (Cont'd)

6.1.4 Design Layout Report

At the request of the customer, Iowa Network will provide to the customer the makeup of the facilities and services provided. This information will be provided in the form of a Design Layout Report. The Design Layout Report will be provided to the customer at no charge, and will be reissued or updated whenever these facilities are materially changed.

6.1.5 Acceptance Testing

At no additional charge, Iowa Network will, at the customer's request, cooperatively test, at the time service is initiated, the following parameters: loss, C-notched noise, C-message noise, 3-tone slope, d.c. continuity and operational signaling.

6.1.6 Routine Testing

At no additional charge, Iowa Network will, at the customer's request, test after installation on an automatic or manual basis, 1004 Hz loss, C-message noise and Balance (Return Loss).

6. Switched Access Service (Cont'd)

6.1 General (Cont'd)

6.1.6 Routine Testing (Cont'd)

In the case of automatic testing, the customer shall provide remote office test lines and 105 test lines with associated responders or their functional equivalent.

The frequency of these tests will be that which is mutually agreed upon by the customer and Iowa Network, but shall consist of not less than quarterly 1004 Hz Loss and C-message noise tests and an annual Balance test. Trunk test failures requiring customer participation for trouble resolution will be provided to the customer on an as-occurs basis.

Additional tests may be ordered as set forth in 13.3.4 following. Charges for these additional tests are set forth in 13.3.4(C) following.

6.1.7 Ordering Options and Conditions

Switched Access Service is ordered under the Access Order provisions set forth in Section 5. preceding. Also, included in that section are other charges which may be associated with ordering Switched Access Service (e.g., Service Date Change Charges, Cancellation Charges, etc.).

TARIFF LIBRARY
UTILITIES DIVISION

6. Switched Access Service (Cont'd)

6.2 Provision and Description of Switched Access Service Feature Groups

Switched Access Service is provided in two different Feature Group arrangements. There are two (2) specific transmission performances (i.e., Types A and B) that have been identified for the provision of Feature Groups. The parameters for the transmission specifications are set forth in 6.4.1 following and Section 15.2.1. (C)

Feature Groups are arranged with Access Service for two-way calling. Originating calling permits the delivery of calls from Telephone Exchange Service locations to a customer's point of interconnection. Terminating calling permits the delivery of calls from the customer's Point of interconnection to Telephone Exchange Service locations. Two-way calling permits the delivery of calls in both directions, but not simultaneously.

Following are detailed descriptions of each of the available Feature Groups. Each Feature Group is described in terms of its specific physical characteristics and calling patterns, the transmission specifications with which it is provided, and the standard testing capabilities.

6.2.1 Reserved for Future Use

6.2.2 Feature Group B (FGB)

(A) Description

(1) FGB is provided as trunk side switching ing through the use of access tandem switch trunk equipment at Iowa Network's central access tandem. The switch trunk equipment is provided

6. Switched Access Service (Cont'd)

6.2 Provision and Description of Switched Access Service Feature Groups (Cont'd)

6.2.2 Feature Group B (FGB) (Cont'd)

(A) Description (Cont'd)

(1) (Cont'd)

with wink start start-pulsing signals and answer and disconnect supervisory signaling.

(2) FGB switching is provided with multi-frequency address signaling in the originating direction only. Any other address signaling in the originating direction, if required by the customer, must be provided by the customer's end user using inband tone signaling techniques. Such inband tone address signals will not be regenerated by Iowa Network and will be subject to the ordinary transmission capabilities of the Switched Transport provided.

(3) The access code for FGB switching is a uniform access code. The form of the uniform access code is 950-0XXX or 950-1XXX for customers. These uniform access codes will be the assigned access numbers of all FGB Switched Access Service provided to the customer by Iowa Network.

(4) The customer will also be billed additional non-access charges for calls to certain community information services for which rates are applicable, e.g., 976 (DIAL-IT) Network Service. Additionally, non-access charges will also

6. Switched Access Service (Cont'd)

6.2 Provision and Description of Switched Access Service Feature Groups (Cont'd)

6.2.2 Feature Group B (FGB) (Cont'd)

(A) Description (Cont'd)

(4) (Cont'd)

be billed for calls from a FGB trunk to another customer's service in accordance with that customer's applicable service rate when Iowa Network performs the billing function for that customer.

Calls in the terminating direction will not be completed to 950-1XXX or 950-0XXX access codes, local operator assistance (0- and 0+) and 911 or 10XXX access codes. FGB may not be switched, in the terminating direction, to Switched Access Service Feature Groups B, C and D.

As a matter of clarification, in addition to the rates and charges set forth in Sections 6.8 and 4(I) for the services provided by Iowa Network, the customer will also be billed access charges by Participating Telephone Companies and, when applicable, other Exchange Telephone Companies in compliance with their tariffs for the provision of access service in their operating territories between an Iowa Network premises listed in Section 8. following and the end offices served by Iowa Network's central access tandem. In addition, the customer may also be billed access charges by the Participating Telephone Companies or other Exchange Telephone Companies in compliance with their tariffs for the

TF- 88-628
RPU- 88-2
TARIFF LIBRARY
UTILITIES DIVISION

6. Switched Access Service (Cont'd)

6.2 Provision and Description of Switched Access Service Feature Groups (Cont'd)

6.2.2 Feature Group B (FGB) (Cont'd)

(A) Description (Cont'd)

(4) (Cont'd)

provision of access services between an Iowa Network premises set forth in Section 8. following and the customer's premises.

(5) FGB switching, when used in the terminating direction, provides the measurement of actual terminating minutes of use. The actual terminating minutes of use will be provided to the Participating Telephone Companies listed in Section 9. following to allow the customer to receive accurate and verifiable bills for Switched Access Service.

(B) Transmission Specifications

FGB is provided with Type B Transmission Specifications. The specifications for the associated parameters are guaranteed to the end office when routed directly or to the first point of switching when routed via an access tandem. Type DB Data Transmission Parameters are provided with FGB to Iowa Network's central access tandem.

(C) Testing Capabilities

In addition to the tests described in 6.1.5 preceding which are included with the installation of service, Additional Cooperative Acceptance Testing and Additional Automatic Testing will be provided as set forth in 13.3.4 following.

TF - 90-185

TARIFF LIBRARY
UTILITIES DIVISION

6. Switched Access Service (Cont'd)

6.2 Provision and Description of Switched Access Service Feature Groups (Cont'd)

6.2.3 Reserved for Future Use (C)

(D)

(D)

TARIFF LIBRARY
UTILITIES DIVISION

6. Switched Access Service (Cont'd)

6.2 Provision and Description of Switched Access Service Feature Groups (Cont'd)

6.2.3 Reserved for Future Use (Cont'd) (C)

(D)

(D)

By: William P. Bagley
General Manager
Suite 140
2700 Westown Parkway
West Des Moines, Iowa 50265

TARIFF LIBRARY
UTILITIES DIVISION

6. Switched Access Service (Cont'd)

6.2 Provision and Description of Switched Access Service Feature Groups (Cont'd)

6.2.3 Reserved for Future Use (Cont'd) (C)

(D)

(D)

TF - 90-1851

TARIFF LIBRARY
UTILITIES DIVISION

6. Switched Access Service (Cont'd)

6.2 Provision and Description of Switched Access Service Feature Groups (Cont'd)

6.2.3 Reserved for Future Use (Cont'd) (C)

(D)

(D)

TF - 90-185

TARIFF LIBRARY
UTILITIES DIVISION

6. Switched Access Service (Cont'd)

6.2 Provision and Description of Switched Access Service Feature Groups (Cont'd)

6.2.3 Reserved for Future Use (Cont'd) (C)

(D)

(D)

6. Switched Access Service (Cont'd)

6.2 Provision and Description of Switched Access Service Feature Groups (Cont'd)

TARIFF LIBRARY
UTILITIES DIVISION

6.2.4 Feature Group D (FGD)

(A) Description

(1) FGD is provided at Iowa Network's central access tandem.

(2) FGD is provided as trunk side switching through the use of access tandem switch trunk equipment at Iowa Network's central access tandem. The switch trunk equipment is provided with wink start start-pulsing signals and answer and disconnect supervisory signaling. SS7 signaling is provided instead of multifrequency address signaling when the CCSA optional feature is ordered. (N) | (N)

(3) FGD switching is provided with multifrequency address or SS7 signaling. Up to twelve (12) digits of the called party number dialed by the customer's end user using dual tone multifrequency or dial pulse address signals will be provided by Iowa Network equipment to the customer's point of interconnection. Such address signals will be subject to the ordinary transmission capabilities of Iowa Network's facilities. (C)

(4) FGD switching, when used in the terminating direction, may be used to access valid NXXs in the LATA, time or weather announcement services of a Participating Telephone Company, community information services of an information service provider, and

6. Switched Access Service (Cont'd)

6.2 Provision and Description of Switched Access Service Feature Groups (Cont'd)

6.2.4 Feature Group D (FGD) (Cont'd)

(A) Description (Cont'd)

(4) (Cont'd)

other customers' services (by dialing the appropriate codes) when such services can be reached using valid NXX codes. Only those valid NXX codes served by end office switches subtending Iowa Network's central access tandem may be accessed.

The customer will also be billed additional non-access charges for calls to certain community information services, for which rates are applicable, e.g., 976 (DIAL-IT) Network Services. Additionally, non-access charges will also be billed for calls from a FGD trunk to another customer's service in accordance with that customer's applicable service rates when Iowa Network performs the billing function for that customer.

Calls in the terminating direction will not be completed to 950-0XXX or 950-1XXX access codes, local operator assistance (0- and 0+), and 10XXX access codes. FGD may not be switched, in the terminating direction, to Switched Access Service Feature Groups B, C and D.

6. Switched Access Service (Cont'd)

6.2 Provision and Description of Switched Access Service Feature Groups (Cont'd)

6.2.4 Feature Group D (FGD) (Cont'd)

(A) Description (Cont'd)

(4) (Cont'd)

As a matter of clarification, in addition to the rates and charges set forth in Sections 6.8 and 4(I) for the services provided by Iowa Network, the customer will also be billed access charges by Participating Telephone Companies and, when applicable, other Exchange Telephone Companies in compliance with their tariffs for the provision of access service in their operating territories between an Iowa Network premises listed in Section 8. following and the end offices served by Iowa Network's central access tandem. In addition, the customer may also be billed access charges by the Participating Telephone Companies or other Exchange Telephone Companies in compliance with their tariffs for the provision of access services between an Iowa Network premises set forth in Section 8. following and the customer's premises.

(5) The access code for FGD switching is a uniform access code of the form 10XXX unless a Participating Telephone Company's end office switch is unable to provide a uniform 10XXX code. A single access code will be the assigned number of all FGD access provided to the customer by Iowa Network. No access code

6. Switched Access Service (Cont'd)

6.2 Provision and Description of Switched Access Service Feature Groups (Cont'd)

6.2.4 Feature Group D (FGD) (Cont'd)

(A) Description (Cont'd)

(5) (Cont'd)

is required for calls to a customer over FGD Switched Access Service if the end user's telephone exchange service is arranged for presubscription to that customer.

Where no access code is required, the number dialed by the end user shall be a seven (7) to ten (10) digit number, where appropriate, for calls in the North American Numbering Plan (NANP). The form of the numbers dialed by the end user is NXX-XXXX, 0 or 1 + NXX-XXXX, NPA+NXX-XXXX, 0 or 1+ NPA + NXX + XXXX, and for International Direct Distance Dialing (IDDD), 01 + CC + NN or 011 + CC + NN.

The end offices of the Participating Telephone Companies that are listed below are unable to provide a uniform 10XXX code.

Company	Exchange
Grand Mound Telephone Association	Grand Mound, IA
Minerva Valley Telephone Company, Inc.	Clemens, IA Zearing, IA
* Farmers Mutual Telephone Company	Urbana, IA

* This end office will be capable of providing a uniform 10XXX code on or before May 1, 1989.

By: William P. Bagley
General Manager
Suite 140
2700 Westown Parkway
West Des Moines, Iowa 50265

6. Switched Access Service (Cont'd)

6.2 Provision and Description of Switched Access Service Feature Groups (Cont'd)

6.2.4 Feature Group D (FGD) (Cont'd)

(A) Description (Cont'd)

(5) (Cont'd)

Company	Exchange	
Cascade Telephone Company	Cascade, IA	(N) (N)

6. Switched Access Service (Cont'd)

6.2 Provision and Description of Switched Access Service Feature Groups (Cont'd)

6.2.4 Feature Group D (FGD) (Cont'd)

(A) Description (Cont'd)

(5) (Cont'd)

When a uniform 10XXX code is unavailable, the end user has a choice of the following dialing procedures:

i. 1+950+0XXX+customer authorization code

ii. 1+950+1XXX+customer authorization code

iii. 1+800+7 digits+customer authorization code

When the 10XXX access code is used, FGD switching also provides for dialing the digit 0 (zero) for access to the customer's operator, or the end-of-dialing digit (#) for cut-through access to the customer's premises, or 911 for access to the emergency reporting service of a Participating Telephone Company.

(6) FGD switching, when used in the terminating direction, provides the measurement of actual terminating minutes of use. The actual terminating minutes of use will be provided to the Participating Telephone Companies listed in Section 9. following to allow the customer to receive accurate and verifiable bills for Switched Access Service.

TARIFF LIBRARY
UTILITIES DIVISION

6.2 Provision and Description of Switched Access Service Feature Groups (Cont'd)

6.2.4 Feature Group D (FGD) (Cont'd)

(A) Description (Cont'd)

(7) When a customer has had FGB access and subsequently replaces the FGB access with FDG access, at the customer's request and where facilities permit, Iowa Network will, for a period of ninety (90) days, direct calls dialed by the customer's end users using the customer's previous FGB access code to the customer's FGD access service. The customer must be prepared to handle normally dialed FGD calls as well as calls dialed with the FGB access code which require the customer to receive additional address signaling from the end user. Such calls will be rated as FGD.

(8) Unless prohibited by technical limitations, the customer's Interim NXX Translation traffic may, at the option of the customer, be combined in the same trunk group arrangement with the customer's non-Interim NXX Translation traffic. When required by technical limitations, or at the request of the customer, a separate trunk group will be established for Interim NXX translation traffic. (N) (N)

(B) Transmission Performance

FGD is provided with Type A Transmission Specifications.

Type DA Data Transmission Parameters are provided for the transmission path between the customer's premises and the access tandem and between the access tandem and the end office.

TARIFF LIBRARY
UTILITIES DIVISION

6. Switched Access Service (Cont'd)

6.2 Provision and Description of Switched Access Service Feature Groups (Cont'd)

6.2.4 Feature Group D (FGD) (Cont'd)

(C) Testing Capabilities

FGD is provided, in the terminating direction where equipment is available, with seven (7) digit access to balance (100 type) test line, milliwatt (102 type) test line, nonsynchronous or synchronous test line, automatic transmission measuring (105 type) test line, loop around test line, short circuit test line and open circuit test line. In addition to the tests described in 6.1.5 preceding which are included with the installation of service, Additional Cooperative Acceptance testing and Additional Automatic Testing will be provided for FGD as set forth in 13.3.4 following.

When FGD is ordered with the CCSA option, network compatibility and other operational tests will be performed cooperatively with Iowa Network, MEANS, and the interexchange carrier at locations, dates, and times as specified by Iowa Network in consultation with the interexchange carrier. These tests must ensure the connection of the INS/MEANS and IXC signaling networks meets or exceeds industry standards before CCSA service is established. (N)

6.3 Reserved for Future Use

TF - 90-185

TARIFF LIBRARY
UTILITIES DIVISION

6. Switched Access Service (Cont'd)

6.4 Transmission Specifications

Each Switched Access Service transmission path is provided with standard transmission specifications. There are two different standard specifications (Types A and B). The standard for the transmission path is dependent on the Feature Group. The available transmission specifications are set forth in 6.4.1 and 15.2.1 following. Data Transmission Parameters are also provided with the Switched Access Service transmission path. Iowa Network will, upon notification by the customer that the data parameters set forth in 6.4.2(A), 6.4.2(B) or 15.2.2 are not being met, conduct tests independently or in cooperation with the customer, and take any necessary action to insure that the data Parameters are met.

All service configurations operated by Iowa Network after the effective date of this tariff will conform to the transmission specifications contained in this tariff.

The transmission specifications contained in this Section are immediate action limits. Acceptance limits are set forth in Technical Reference TR-NPL-000334. This Technical Reference also provides the basis for determining Switched Access Service maintenance limits.

6.4.1 Standard Transmission Specifications

Following are descriptions of the two Standard Transmission Specifications available with Switched Access Service Feature Groups. The specific applications in terms of the Feature Groups and Interface Group with which the Feature Group Standard Transmission Performances are provided are set forth in 6.2.2(B) and 6.2.4(B) preceding. (C)

6. Switched Access Service (Cont'd)

6.4 Transmission Specifications (Cont'd)

6.4.1 Standard Transmission Specifications (Cont'd)

(A) Type A Transmission Specifications

Type A Transmission Specifications are provided with the following parameters:

(1) Loss Deviation

The maximum Loss Deviation of the 1004 Hz loss relative to the Expected Measured Loss (EML) is ±2.0 dB.

(2) Attenuation Distortion

The maximum Attenuation Distortion in the 404 to 2804 Hz frequency band relative to the loss at 1004 Hz is -1.0 dB to +3.0 dB.

(3) C-Message Noise

The maximum C-Message Noise for the transmission path at the route miles listed is less than or equal to:

Route Miles	C-Message Noise
less than 50	32 dBrnCO
51 to 100	34 dBrnCO
101 to 200	37 dBrnCO
201 to 400	40 dBrnCO
401 to 1000	42 dBrnCO

6. Switched Access Service (Cont'd)

6.4 Transmission Specifications (Cont'd)

6.4.1 Standard Transmission Specifications (Cont'd)

(A) Type A Transmission Specifications (Cont'd)

(4) C-Notched Noise

The maximum C-Notched Noise, utilizing a -16 dBm0 holding tone, is less than or equal to 45 dBrnCO.

(5) Echo Control

Echo Control, identified as Equal Level Echo Path Loss, and expressed as Echo Return Loss and Singing Return Loss is equal to or greater than the following:

Echo Return Loss	Singing Return Loss
16 dB	11 dB

(B) Type B Transmission Specifications

Type B Transmission Specifications are provided with the following parameters:

(1) Loss Deviation

The maximum Loss Deviation of the 1004 Hz loss relative to the Expected Measured Loss (EML) is ± 2.5 dB.

TARIFF LIBRARY
UTILITIES DIVISION

6. Switched Access Service (Cont'd)

6.4 Transmission Specifications (Cont'd)

6.4.1 Standard Transmission Specifications (Cont'd)

(B) Type B Transmission Specifications (Cont'd)

(2) Attenuation Distortion

The maximum Attenuation Distortion in the 404 to 2804 Hz frequency band relative to loss at 1004 Hz is -2.0 dB to +4.0 dB.

(3) C-Message Noise

The maximum C-Message Noise for the transmission path at the route miles listed is less than or equal to:

Route Miles	C-Message Noise* Type B1	C-Message Noise* Type B2
less than 50	32 dBrnCO	35 dBrnCO
51 to 100	33 dBrnCO	37 dBrnCO
101 to 200	35 dBrnCO	40 dBrnCO
201 to 400	37 dBrnCO	43 dBrnCO
401 to 1000	39 dBrnCO	45 dBrnCO

(4) C-Notched Noise

The maximum C-Notched Noise, utilizing a -16 dBmO holding tone is less than or equal to 47 dBrnCO.

* For Feature Group D only, Type B2 will be provided. For Feature Group B, Type B1 or B2 will be provided as set forth in Technical Reference TR-NPL-000334. (C)

TARIFF LIBRARY
UTILITIES DIVISION

6. Switched Access Service (Cont'd)

6.4 Transmission Specifications (Cont'd)

6.4.1 Standard Transmission Specifications (Cont'd)

(B) Type B Transmission Specifications (Cont'd)

(5) Echo Control

Echo Control is identified as Impedance Balance for FGB and Equal Level Echo Path Loss for FGD, and expressed as Echo Return Loss (ERL) and Singing Return Loss (SRL). The ERL and SRL also differ by Feature Group. They are greater than or equal to the following: (C)

	Echo Return Loss	Singing Return Loss
o For FGB access	8 dB	4 dB

(D)

(D)

(C) Reserved for Future Use

TARIFF LIBRARY
UTILITIES DIVISION

6. Switched Access Service (Cont'd)

6.4 Transmission Specifications (Cont'd)

6.4.2 Data Transmission Parameters

Two types of Data Transmission Parameters, i.e., Type DA and Type DB, are provided for the Feature Group arrangements. The specific applications in terms of the Feature Groups with which they are provided are set forth in 6.2.2(B) and 6.2.4(B) preceding. Following are descriptions of each. (C)

(A) Data Transmission Parameters Type DA (T)

(1) Signal to C-Notched Noise Ratio

The Signal to C-Notched Noise Ratio is equal to or greater than 33 dB.

(2) Envelope Delay Distortion

The maximum Envelope Delay Distortion for the frequency bands and route miles specified is:

604 to 2804 Hz

less than 50 route miles	500 microseconds
equal to or greater than 50 route miles	900 microseconds

1004 to 2404 Hz

less than 50 route miles	200 microseconds
equal to or greater than 50 route miles	400 microseconds

6. Switched Access Service (Cont'd)

6.4 Transmission Specifications (Cont'd)

6.4.2 Data Transmission Parameters (Cont'd)

(A) Data Transmission Parameters Type DA (Cont'd)

(3) Impulse Noise Counts

The Impulse Noise Counts exceeding a 65 dBrnCO threshold in fifteen (15) minutes is no more than fifteen (15) counts.

(4) Intermodulation Distortion

The Second Order (R2) and Third Order (R3) Intermodulation Distortion products are equal to or greater than:

Second Order (R2)	33 dB
Third Order (R3)	37 dB

(5) Phase Jitter

The Phase Jitter over the 4-300 Hz frequency band is less than or equal to 5 degrees peak-to-peak.

(6) Frequency Shift

The maximum Frequency Shift does not exceed -2 to +2 Hz.

6. Switched Access Service (Cont'd)

6.4 Transmission Specifications (Cont'd)

6.4.2 Data Transmission Parameters (Cont'd)

(B) Data Transmission Parameters Type DB

(1) Signal to C-Notched Noise Ratio

The signal to C-Notched Noise Ratio is equal to or greater than 30 dB.

(2) Envelope Delay Distortion

The maximum Envelope Delay Distortion for the frequency bands and route miles specified is:

	604 to 2804 Hz
less than 50 route miles	800 microseconds
equal to or greater than 50 route miles	1000 microseconds

	1004 to 2404 Hz
less than 50 route miles	320 microseconds
equal to or greater than 50 route miles	500 microseconds

(3) Impulse Noise Counts

The Impulse Noise Counts exceeding a 67 dBrnCO threshold in fifteen (15) minutes is no more than fifteen (15) counts.

6. Switched Access Service (Cont'd)

6.4 Transmission Specifications (Cont'd)

6.4.2 Data Transmission Parameters (Cont'd)

(B) Data Transmission Parameters Type DB (Cont'd)

(4) Intermodulation Distortion

The Second Order (R2) and Third Order (R3) Intermodulation Distortion products are equal to or greater than:

Second Order (R2)	31 dB
Third Order (R3)	34 dB

(5) Phase Jitter

The Phase Jitter over the 4-300 Hz frequency band is less than or equal to 7 degrees peak-to-peak.

(6) Frequency Shift

The maximum Frequency Shift does not exceed -2 to +2 Hz.

6. Switched Access Service (Cont'd)

6.5 Obligations of Iowa Network

In addition to the obligations of Iowa Network set forth in Section 2. preceding, Iowa Network has certain other obligations pertaining only to the provision of Switched Access Service. These obligations are as follows:

6.5.1 Network Management

Iowa Network will administer its network to ensure the provision of acceptable service levels to all telecommunications users of Iowa Network's services. Iowa Network maintains the right to apply protective controls, i.e., those actions, such as call gapping, which selectively cancel the completion of traffic, over any traffic carried over its network, including that associated with a customer's Switched Access Service. Generally, such protective measures would only be taken as a result of occurrences such as failure or overload of Iowa Network or customer facilities, natural disasters, mass calling or national security demands. In the event that the protective controls applied by Iowa Network result in the complete loss of service by the customer, the customer will be granted a Credit Allowance for Service Interruption as set forth in 2.4.4(B)(1) preceding.

6.5.2 Design and Traffic Routing of Switched Access Service

In compliance with their tariffs and the Board's Orders issued on October 18, 1988 and December 7, 1988 in Docket No. RPU-88-2, the Participating Telephone Companies listed in Section 9. following shall design and determine the routing of Switched Access Service, including the selection of the first point of switching and the selection of facilities from the interface to any switching point and to the end offices of the Participating Telephone Companies serving the customer. The Participating Telephone Companies

TARIFF LIBRARY
UTILITIES DIVISION

6. Switched Access Service (Cont'd)

6.5 Obligations of Iowa Network (Cont'd)

6.5.2 Design and Traffic Routing of Switched Access Service (Cont'd)

shall also decide if capacity is to be provided by originating only, terminating only, or two-way trunk groups.

Finally, Iowa Network will decide whether trunk side access will be provided through the use of two-wire or four-wire trunk terminating equipment. Selection of facilities and equipment and traffic routing of the service are based on standard engineering methods, available facilities and equipment, and the Iowa Network traffic routing plans. (C)

If the customer desires routing or directionality different from that determined by the Participating Telephone Companies, Iowa Network will work cooperatively with the customer in determining the directionality of the service.

6.5.3 Provision of Service Performance Data

Subject to availability, end-to-end service performance data available to Iowa Network through its own service evaluation routines, may also be made available to the customer based on previously arranged intervals and format. These data provide information on overall end-to-end call completion and non-completion performance, e.g., customer equipment blockage, failure results and transmission

6. Switched Access Service (Cont'd)

6.5 Obligations of Iowa Network (Cont'd)

6.5.3 Provision of Service Performance Data (Cont'd)

performance. These data do not include service performance data which are provided under other tariff sections, e.g., testing service results. If data are to be provided in other than paper format, the charges for such exchange will be determined on an individual case basis.

6.5.4 Trunk Group Measurement Reports

Subject to availability, Iowa Network will make available trunk group data in the form of usage in CCS, peg count and overflow, to the customer based on previously agreed to intervals.

6.5.5 Determination of Number of Transmission Paths

Iowa Network will determine the number of Switched Access Service transmission paths to be provided for the Switched Access Feature Groups ordered. A transmission path is a derived communication path of a frequency bandwidth of approximately 300 Hz to 3000 Hz provided over a high speed digital facility between a customer's point of interconnection listed in Section 8. following and Iowa Network's central access tandem. The number of transmission paths will be developed using the total busy hour minutes of capacity by type (as described in 6.1.1(F) preceding) for each Feature Group ordered to Iowa Network's central access tandem. The total busy hour minutes of capacity by type for the Feature Group will be converted to transmission paths using standard traffic engineering methods.

TARIFF LIBRARY
UTILITIES DIVISION

6. Switch Access Service (Cont'd)

6.5 Obligations of Iowa Network (Cont'd)

6.5.6 Reserved for Future Use

6.5.7 Design Blocking Probability

Iowa Network will design the facilities used in the provision of Switched Access Service to meet the blocking probability criteria as set forth in (A) through (C) following.

(A) For Feature Group B, no design blocking criteria apply.

(B) For Feature Group D, the design blocking objective will be no greater than one percent (1%) between the customer's point of interconnection set forth in Section 8. following and Iowa Network's central access tandem. Standard traffic engineering methods as set forth in reference document Telecommunications Transmission Engineering - Volume 3 - Networks and Services (Chapters 6-7) will be used by Iowa Network to determine the number of transmission paths required to achieve this level of blocking. (C)

(C) Iowa Network will perform routine measurement functions to assure that an adequate number of transmission paths are in service. Iowa Network will recommend that

6. Switched Access Service (Cont'd)

6.5 Obligations of Iowa Network (Cont'd)

6.5.7 Design Blocking Probability (Cont'd)

(C) (Cont'd)

additional busy hour minutes of capacity be ordered by the customer when additional paths are required to reduce the measured blocking to the design blocking level. For the capacity ordered, the design blocking objective is assumed to have been met if the routine measurements show that the measured blocking does not exceed the threshold listed in the following table.

Number of Transmission Paths Per Trunk Group	Measured Blocking Thresholds in the Time Consistent Busy Hour for the Number of Average Business Day Measurements Per Trunk Group			
	15-20 Measurements	11-14 Measurements	7-10 Measurements	3-6 Measurements
2	.045	.055	.060	.095
3	.035	.040	.045	.060
4	.035	.040	.045	.055
5-6	.025	.035	.040	.045
7 or more	.020	.025	.030	.040

TARIFF LIBRARY
UTILITIES DIVISION

6. Switched Access Service (Cont'd)

6.6 Obligations of the Customer

In addition to the obligations of the customer set forth in Section 2. preceding, the customer has certain specific obligations pertaining to the use of Switched Access Service. These obligations are as follows:

6.6.1 Report Requirements

Customers are responsible for providing the following reports to Iowa Network when applicable.

(A) Jurisdictional Reports

When a customer orders Switched Access Service for both interstate and intrastate use, the customer is responsible for providing reports as set forth in 2.3.14 preceding. Charges will be apportioned in accordance with those reports. The method to be used for determining the intrastate charges is set forth in 2.3.15 preceding.

(B) NXX Code Reports (C)

When a customer orders the Interim NXX Translation optional feature, it must report the appropriate NXX codes which will be instituted at Iowa Network's central access tandem, or when available, at an end office switch of a Participating Telephone Company at which the carrier identification function is performed. The report must be updated each time a change occurs, i.e., when a new code is added or an existing code is deleted. (C)

6. Switched Access Service (Cont'd)

6.6 Obligations of the Customer (Cont'd)

6.6.2 Supervisory Signaling

The customer's facilities shall provide the necessary on-hook, off-hook, answer and disconnect supervision.

6.6.3 Trunk Group Measurement Reports

With the agreement of the customer, trunk group data in the form of usage in CCS, peg count and overflow for its end of all access trunk groups, where technologically feasible, will be made available to Iowa Network. These data will be used to monitor trunk group utilization and service performance and will be based on previously arranged intervals and format.

6.6.4 Design of Switched Access Services

When a customer orders Switched Access Service, the customer shall take reasonable steps to assure that sufficient access services have been ordered to handle its traffic.

6.6.5 Short Duration Mass Calling Requirements (N)

When a customer offers service for which a substantial call volume is expected during a short period of time (e.g., 900 service media stimulated events), the customer must notify Iowa Network and the affected Participating Telephone Companies listed in Section 9. following at least 48 hours in advance of each peak period. Notification should include the nature, time, duration, and frequency of the event, an estimated call volume, and the telephone number(s) to be used. (N)

6. Switched Access Service (Cont'd)

6.6 Obligations of the Customer (Cont'd)

6.6.5 Short Duration Mass Calling Requirements (Cont'd)

On the basis of the information provided, Iowa Network may invoke network management controls, (e.g., call gapping and code blocking) to reduce the probability of excessive network congestion. Iowa Network will work cooperatively with the customer to determine the appropriate level of such control. (N)

6. Switched Access Service (Cont'd)

TARIFF LIBRARY
UTILITIES DIVISION

6.7 Rate Regulations

This section contains the specific regulations governing the rates and charges that apply for Switched Access Service.

6.7.1 Description and Application of Rates and Charges

There are two types of rates and charges that apply to Switched Access Service. These are usage rates and nonrecurring charges. These rates and charges are applied differently to the various rate elements.

(A) Usage Rates

Usage rates for Switched Access Service are rates that apply on a per access minute basis when a specific rate element is used except for Network Blocking which is applied on a per call blocked basis beyond the blocking threshold. Access minute rates and network blocking rates are accumulated over a monthly period.

(B) Nonrecurring Charges

Nonrecurring charges are one-time charges that apply for specific work activity (i.e. installation or change to an existing service). The types of nonrecurring charges that apply to Switched Access Service are: installation of service, Interim NXX Translation optional feature, and service rearrangements. (C) (C)

(1) Installation of Service (N)

Nonrecurring charges apply to each Switched Access Service installed. For FGB and FGD, which are ordered on a busy hour minutes of capacity basis, the (N)

Certain regulations previously found on this page can now be found on Original Page 190.1.

TARIFF LIBRARY
UTILITIES DIVISION

6. Switched Access Service (Cont'd)

6.7 Rate Regulations (Cont'd)

6.7.1 Description and Application of Rates and Charges (Cont'd)

(B) Nonrecurring Charges (Cont'd)

(1) Installation of Service (Cont'd) (N)

charge is applied on a per trunk basis but the charge applies only when the capacity ordered requires the installation or activation of an additional trunk(s) which is uniquely identified for the sole use of the ordering customer. The initial trunk charge at 6.8.4(A) following applies to the first trunk ordered on any access service order. The additional trunk charge at 6.8.4 (A) following applies to each additional trunk ordered at the same time in the same access service order.

The nonrecurring charges associated with the initial conversion of FGD trunks from multifrequency (MF) to common channel signaling are the installation charges at 6.8.4(A) following applied on a per SNAC basis. No additional nonrecurring charges are applied to FGD trunk conversions from MF to SS7 signaling subsequent to the installation of the SNACs. (N)

(2) Interim NXX Translation Optional Feature (T)(M)

This nonrecurring charge applies to the initial order for the installation of the Interim NXX Translation optional feature with Feature Group D Switched Access Service and for each subsequent order received to add or change NXX translation codes. This charge, if applicable, applies whether this optional feature is installed coincident with or at any time subsequent to the commencement of Switched (M)

Certain regulations found on this page formerly appeared on 1st Revised Page 190 and 1st Revised Page 191.

TARIFF LIBRARY
UTILITIES DIVISION

6. Switched Access Service (Cont'd)

6.7 Rate Regulations (Cont'd)

6.7.1 Description and Application of Rates and Charges (Cont'd)

(B) Nonrecurring Charges (Cont'd)

(2) Interim NXX Translation Optional Feature (Cont'd) (T)

Access Service. This charge is applied by Iowa Network per order. When it is necessary for multiple telephone companies to provide the translation function, the nonrecurring charge is assessed only by the company that provides the final translation function which identifies the customer's traffic and this traffic is then delivered to the customer's point of termination without any further translation.

(3) Service Rearrangements (N)

All changes to existing services, other than changes involving administrative activities listed in (C) following, will be treated as a discontinuance of the existing service and an installation of a new service. The nonrecurring charge described in (1) preceding will apply for this work activity. No additional nonrecurring charges apply to FGD trunk conversions from MF to SS7 signaling subsequent to the installation of the SNACs. (N)

(C) Administrative Changes

Changes which result in the establishment of new minimum period obligations are treated as discontinuances of existing service and installations of new service.

Certain regulations previously found on this page can now be found on Original Page 190.1.

6. Switched Access Service (Cont'd)

6.7 Rate Regulations (Cont'd)

6.7.1 Description and Application of Rates and Charges (Cont'd)

(C) Administrative Changes (Cont'd)

Administrative changes as follow will be made without changes to minimum period obligations:

- Change of customer name,
- Change of customer or customer's end user premises address when the change of address is not a result of a physical relocation of equipment,
- Change in billing data (name, address, or contact name or telephone number),
- Change of agency authorization,
- Change of customer circuit identification,
- Change of billing account number,
- Change of customer test line number,
- Change of customer or customer's end user contact name or telephone number, and
- Change of jurisdiction.

(D) Rates Applicable to Feature Group B

(1) When the customer's point of interconnection is located at Iowa Network's central access tandem, the Switched Transport rate set forth in Section 6.8.3 following applies to Feature Group B calls in both the originating and terminating directions. The Switched Transport rate is assessed on a per mile per access minute basis for the transport of the call in the

TARIFF LIBRARY
UTILITIES DIVISION

6. Switched Access Service (Cont'd)

6.7 Rate Regulations (Cont'd)

6.7.1 Description and Application of Rates and Charges (Cont'd)

(D) Rates Applicable to Feature Group B (Cont'd)

(1) (Cont'd)

originating direction from an Iowa Network premises set forth in Section 8. following to Iowa Network's central access tandem and in the terminating direction from Iowa Network's central access tandem to an Iowa Network premises set forth in Section 8. following. In addition, the Centralized Equal Access Service rate set forth in Section 6.8.1 following also applies to Feature Group B Switched Access Service in the terminating direction. (C)

As a matter of clarification, in addition to the rates and charges set forth in Sections 6.8 and 4(I) for the services provided by Iowa Network, the customer will also be billed access rates and charges by Participating Telephone Companies and, when applicable, other Exchange Telephone Companies in compliance with their tariffs for the provision of access service in their operating territories between an Iowa Network premises listed in Section 8. following and the end office(s) served by Iowa Network's central access tandem. For purposes

6. Switched Access Service (Cont'd)

6.7 Rate Regulations (Cont'd)

6.7.1 Description and Application of Rates and Charges (Cont'd)

(D) Rates Applicable to Feature Group B (Cont'd)

(1) (Cont'd)

of determining Local Transport measurement, distance will be measured by the Exchange Telephone Companies in compliance with their tariffs from the wire center that normally serves the customer premises to the end office switch(es) of the Participating Telephone Companies. In addition, the customer may also be billed access rates and charges by the Participating Telephone Companies or other Exchange Telephone Companies in compliance with their tariffs for the provision of access services between an Iowa Network premises set forth in Section 8. following and the customer's premises.

The following diagram depicts a generic view of the rates that apply for Feature Group B Switched Access Service when the customer's point of interconnection is located at Iowa Network's central access tandem.

6. Switched Access Service (Cont'd)

6.7 Rate Regulations (Cont'd)

6.7.1 Description and Application of Rates and Charges (Cont'd)

(D) Rates Applicable to Feature Group B (Cont'd)

(1) (Cont'd)

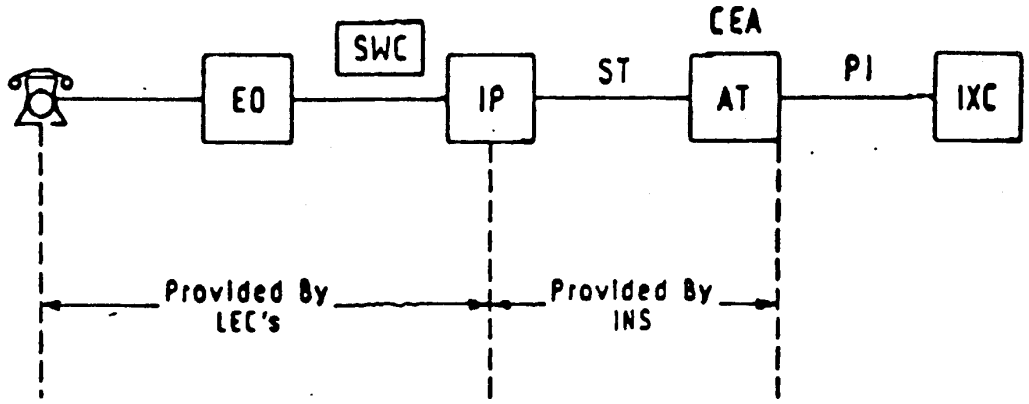

For originating FGB ... ST rate applies.
For terminating FGB ... ST and CEA rates apply.

6. Switched Access Service (Cont'd)

6.7 Rate Regulations (Cont'd)

6.7.1 Description and Application of Rates and Charges (Cont'd)

(D) Rates Applicable to Feature Group B (Cont'd)

(1) (Cont'd)

Glossary

AT	-	Iowa Network's Central Access Tandem
EO	-	End Office of an Exchange Telephone Company
INS	-	Iowa Network Services, Inc.
IP	-	Iowa Network Premises
IXC	-	Interexchange Carrier
LEC	-	Local Exchange Carrier
PI	-	Customer's Point of Interconnection
ST	-	Switched Transport
SWC	-	Customer's Serving Wire Center

(2) The Switched Transport rate does not apply to Feature Group B whenever Iowa Network transports a call from an Iowa Network premises to Iowa Network's central access tandem and back to the same Iowa Network premises. In addition, the Centralized Equal Access Service rate set forth in Section 6.8.1 following also does not apply to originating Feature Group B calls. The customer will be charged the Centralized Equal Access Service rate set forth in Section 6.8.1 for Feature Group B Switched Access Service provided in the terminating direction.

TARIFF LIBRARY
UTILITIES DIVISION

6. Switched Access Service (Cont'd)

6.7 Rate Regulations (Cont'd)

6.7.1 Description and Application of Rates and Charges (Cont'd)

(D) Rates Applicable to Feature Group B (Cont'd)

(2) (Cont'd)

As a matter of clarification, in addition to the rates and charges set forth in Sections 6.8 and 4(I) for the services provided by Iowa Network, the customer will be billed access rates and charges by Participating Telephone Companies and, when applicable, other Exchange Telephone Companies in compliance with their tariffs for the provision of Feature Group B Switched Access Service in their operating territories between an Iowa Network premises listed in Section 8. following and the end office(s) served by Iowa Network's central access tandem. For purposes of determining Local Transport measurement, distance will be measured by Exchange Telephone Companies in compliance with their tariffs from the wire center that normally serves the customer premises to the end office switch(es) of the Participating Telephone Companies. In addition, the customer may also be billed access rates and charges by the Participating Telephone Companies or other Exchange Telephone Companies in compliance with their tariffs for the provision of Feature Group B Switched Access Service between an Iowa Network premises set forth in Section 8. following and the customer's premises.

6. Switched Access Service (Cont'd)

6.7 Rate Regulations (Cont'd)

6.7.1 Description and Application of Rates and Charges (Cont'd)

(D) Rates Applicable to Feature Group B (Cont'd)

(2) (Cont'd)

The following diagram depicts a generic view of the rates that apply to Feature Group B Switched Access Service when Iowa Network transports a call from an Iowa Network premises to its central access tandem and back to the same Iowa Network premises.

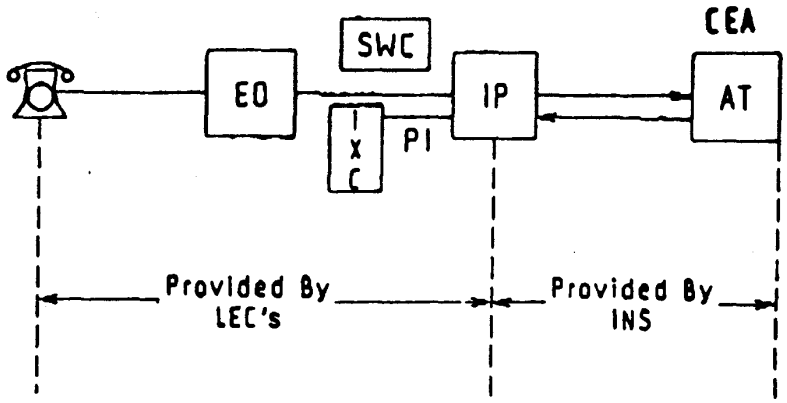

For originating FGB ... No Iowa Network rates or charges apply.
For terminating FGB ... Iowa Network CEA rate applies.

6. Switched Access Service (Cont'd)

6.7 Rate Regulations (Cont'd)

6.7.1 Description and Application of Rates and Charges (Cont'd)

(D) Rates Applicable to Feature Group B (Cont'd)

(2) (Cont'd)

Glossary

AT	-	Iowa Network's Central Access Tandem
CEA	-	Centralized Equal Access
EO	-	End Office of an Exchange Telephone Company
INS	-	Iowa Network Services, Inc.
IP	-	Iowa Network Premises
IXC	-	Interexchange Carrier
LEC	-	Local Exchange Carrier
PI	-	Customer's Point of Interconnection
SWC	-	Customer's Serving Wire Center

(3) The customer will be charged a Switched Transport rate set forth in Section 6.8.3 following for the transport of a Feature Group B call in the originating and terminating directions between two different Iowa Network premises set forth in Section 8. following that are not located at Iowa Network's central access tandem. The Switched Transport rate is calculated on the airline distance between the V&H coordinates of the two different Iowa Network premises. In addition, the customer will also be charged the Centralized Equal Access Service rate set forth in Section 6.8.1 following for Feature Group B Switched Access Service provided in the terminating direction.

TF- 88-628
RPU 88-2
TARIFF LIBRARY
UTILITIES DIVISION

6. Switched Access Service (Cont'd)

6.7 Rate Regulations (Cont'd)

6.7.1 Description and Application of Rates and Charges (Cont'd)

(D) Rates Applicable to Feature Group B (Cont'd)

(3) (Cont'd)

As a matter of clarification, in addition to the rates and charges set forth in Sections 6.8 and 4(I) for the services provided by Iowa Network, the customer will also be billed access rates and charges by Participating Telephone Companies and, when applicable, other Exchange Telephone Companies in compliance with their tariffs for the provision of Feature Group B Switched Access Service in their operating territories between an Iowa Network premises listed in Section 8. following and the end office(s) served by Iowa Network's central access tandem. For purposes of determining Local Transport measurement, distance will be measured by Exchange Telephone Companies in compliance with their tariffs from the wire center that normally serves the customer premises to the end office switch(es) of the Participating Telephone Companies. In addition, the customer may also be billed access rates and charges by the Participating Telephone Companies or other Exchange Telephone Companies in compliance with their tariffs for the provision of Feature Group B Switched Access Service between an Iowa Network premises set forth in Section 8. following and the customer's premises.

6. Switched Access Service (Cont'd)

6.7 Rate Regulations (Cont'd)

6.7.1 Description and Application of Rates and Charges (Cont'd)

(D) Rates Applicable to Feature Group B (Cont'd)

(3) (Cont'd)

The following diagram depicts a generic view of the rates that apply when Iowa Network transports an originating Feature Group B call between two Iowa Network premises that are not located at Iowa Network's central access tandem.

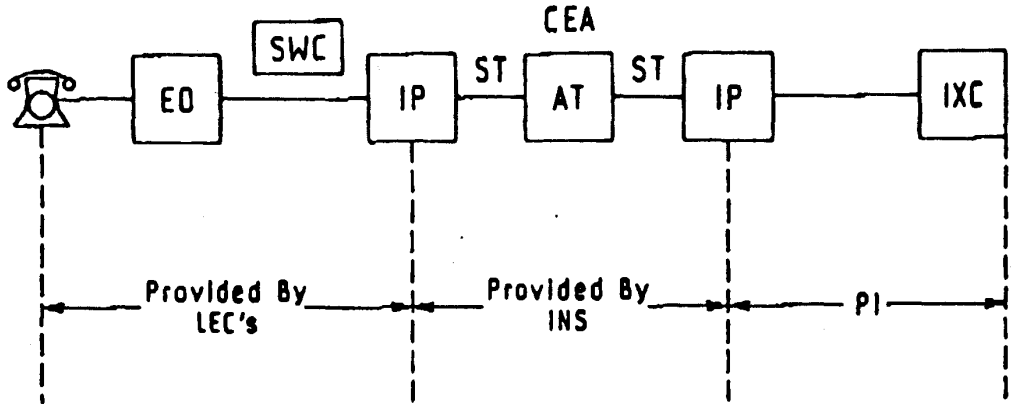

By: William P. Bagley
General Manager
Suite 140
2700 Westown Parkway
West Des Moines, Iowa 50265

6. Switched Access Service (Cont'd)

6.7 Rate Regulations (Cont'd)

6.7.1 Description and Application of Rates and Charges (Cont'd)

(D) Rates Applicable to Feature Group B (Cont'd)

(3) (Cont'd)

For traffic picked up by Iowa Network at one IP and handed off at another IP.

Switched Transport (ST) and Centralized Equal Access (CEA) is provided by Iowa Network. ST is based on V&H coordinates of the two IP locations.

For originating FGB ... ST rate applies.
For terminating FGB ... ST and CEA rates apply.

Glossary

AT	-	Iowa Network's Central Access Tandem
CEA	-	Centralized Equal Access
EO	-	End Office of an Exchange Telephone Company
INS	-	Iowa Network Services, Inc.
IP	-	Iowa Network Premises
IXC	-	Interexchange Carrier
LEC	-	Local Exchange Carrier
PI	-	Customer's Point of Interconnection
ST	-	Switched Transport
SWC	-	Customer's Serving Wire Center

TARIFF LIBRARY
UTILITIES DIVISION

6. Switched Access Service (Cont'd)

6.7 Rate Regulations (Cont'd)

6.7.1 Description and Application of Rates and Charges (Cont'd)

(E) Rates Applicable to Feature Group D (C)

(1) When the customer's point of interconnection is located at Iowa Network's central access tandem, the Switched Transport rate set forth in Section 6.8.3 following applies to Feature Group D calls in both the originating and terminating directions. The Switched Transport rate is assessed on a per mile per access minute basis for the transport of the call in the originating direction from an Iowa Network premises set forth in section 8. following to Iowa Network's central access tandem and in the terminating direction from Iowa Network's central access tandem to an Iowa Network premises set forth in Section 8. following. In addition, the Centralized Equal Access Service rate set forth in Section 6.8.1 following also applies to Feature Group D Switched Access Service. (C) (C) (C)

TARIFF LIBRARY
UTILITIES DIVISION

6. Switched Access Service (Cont'd)

6.7 Rate Regulations (Cont'd)

6.7.1 Description and Application of Rates and Charges (Cont'd)

(E) Rates Applicable to Feature Group D (Cont'd) (C)

(1) (Cont'd)

As a matter of clarification, in addition to the rates and charges set forth in Sections 6.8 and 4(I) for the services provided by Iowa Network, the customer will also be billed access rates and charges by Participating Telephone Companies and, if applicable, other Exchange Telephone Companies in compliance with their tariffs for the provision of Feature Group D Switched (C) Access Service in their operating territories between an Iowa Network premises listed in Section 8. following and the end office(s) served by Iowa Network's central access tandem. For purposes of determining Local Transport measurement, distance will be measured by the Exchange Telephone Companies in compliance with their tariffs from the wire center that normally serves the customer premises to the end office switch(es) of the Participating Telephone Companies. In addition, the customer may also be billed access rates and charges by the Participating Telephone Companies or other Exchange Telephone Companies in compliance with their tariffs for the provision of access services between an Iowa Network premises set forth in Section 8. following and the customer's premises.

TARIFF LIBRARY
UTILITIES DIVISION

6. Switched Access Service (Cont'd)

6.7 Rate Regulations (Cont'd)

6.7.1 Description and Application of Rates and Charges (Cont'd)

(E) Rates Applicable to Feature Group D (Cont'd) (C)

(1) (Cont'd)

The following diagram depicts a generic view of the rates that are applicable when the customer's point of interconnection for Feature Group D is located at Iowa Network's central access tandem. (C)

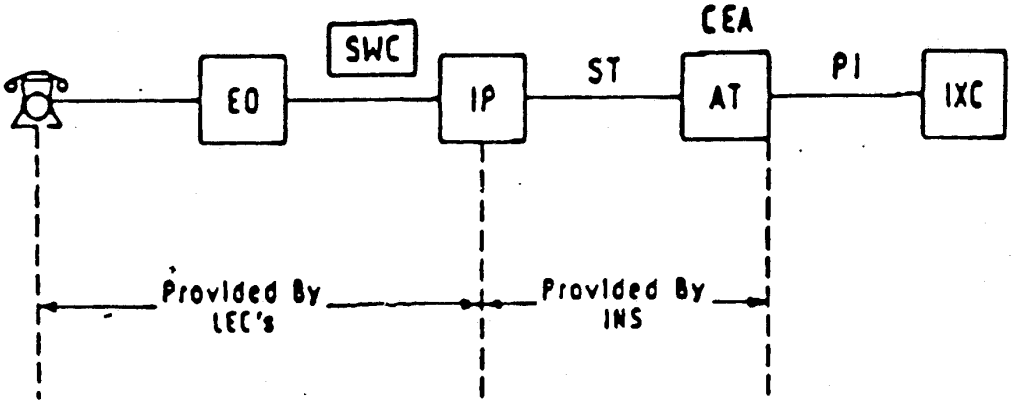

Iowa Network's CEA and ST rates apply.

Issued: May 14, 1990 Effective: JUN 13 1990

By: William P. Bagley
General Manager
Suite 140
2700 Westown Parkway
West Des Moines, Iowa 50265

TARIFF LIBRARY
UTILITIES DIVISION

6. Switched Access Service (Cont'd)

6.7 Rate Regulations (Cont'd)

6.7.1 Description and Application of Rates and Charges (Cont'd)

(E) Rates Applicable to Feature Group D (Cont'd) (C)

(1) (Cont'd)

Glossary

AT	-	Iowa Network's Central Access Tandem
CEA	-	Centralized Equal Access
EO	-	End Office of an Exchange Telephone Company
INS	-	Iowa Network Services, Inc.
IP	-	Iowa Network Premises
IXC	-	Interexchange Carrier
LEC	-	Local Exchange Carrier
PI	-	Customer's Point of Interconnection
ST	-	Switched Transport
SWC	-	Customer's Serving Wire Center

TARIFF LIBRARY
UTILITIES DIVISION

6. Switched Access Service (Cont'd)

6.7 Rate Regulations (Cont'd)

6.7.1 Description and Application of Rates and Charges (Cont'd)

(E) Rates Applicable to Feature Group D (Cont'd) (C)

(2) Iowa Network will not assess the Switched Transport rate set forth in Section 6.8.3 following when Iowa Network transports a Feature Group D (C) call from an Iowa Network premises set forth in Section 8. following to Iowa Network's central access tandem and back to the same Iowa Network premises. The customer will be charged the Centralized Equal Access Service rate set forth in Section 6.8.1 following for Feature Group D Switched Access Service. (C)

As a matter of clarification, in addition to the rates and charges set forth in Sections 6.8 and 4(I) for the services provided by Iowa Network, the customer will be billed access rates and charges by Participating Telephone Companies and, if applicable, other Exchange Telephone Companies in compliance with their tariffs for the provision of Feature Group D Switched (C) Access Service in their operating territories between an Iowa Network premises listed in Section 8. following and the end office(s) served by Iowa Network's central access tandem. For purposes of determining Local Transport measurement, distance will be measured

TARIFF LIBRARY
UTILITIES DIVISION

6. Switched Access Service (Cont'd)

6.7 Rate Regulations (Cont'd)

6.7.1 Description and Application of Rates and Charges (Cont'd)

(E) Rates Applicable to Feature Group D (Cont'd) (C)

(2) (Cont'd)

by the Exchange Telephone Companies in compliance with their tariffs from the wire center that normally serves the customer premises to the end office switch(es) of the Participating Telephone Companies. In addition, the customer may also be billed access rates and charges by the Participating Telephone Companies or other Exchange Telephone Companies in compliance with their tariffs for the provision of access services between an Iowa Network premises set forth in Section 8. following and the customer's premises.

The following diagram depicts a generic view of the rates that apply to Feature Group D Switched Access Service when Iowa Network transports a call from an Iowa Network premises set forth in Section 8. following to Iowa Network's central access tandem and back to the same Iowa Network premises. (C)

TARIFF LIBRARY
UTILITIES DIVISION

6. Switched Access Service (Cont'd)

6.7 Rate Regulations (Cont'd)

6.7.1 Description and Application of Rates and Charges (Cont'd)

(E) Rates Applicable to Feature Group D (Cont'd) (C)

(2) (Cont'd)

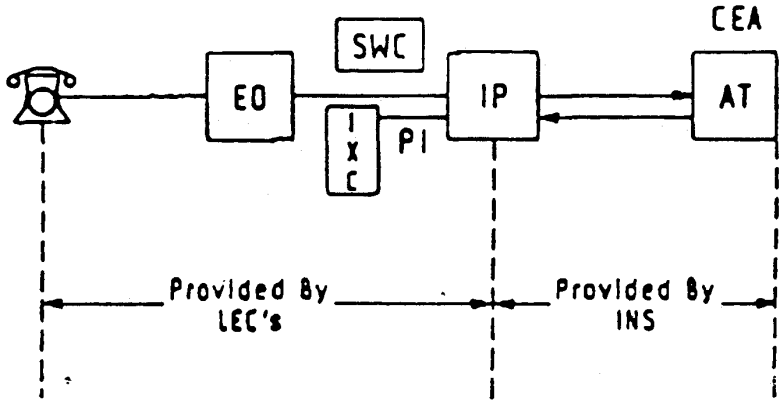

Iowa Network CEA rate applies.

TARIFF LIBRARY
UTILITIES DIVISION

6. Switched Access Service (Cont'd)

6.7 Rate Regulations (Cont'd)

6.7.1 Description and Application of Rates and Charges (Cont'd)

(E) Rates Applicable to Feature Group D (Cont'd) (C)

(2) (Cont'd)

Glossary

AT	-	Iowa Network's Central Access Tandem
CEA	-	Centralized Equal Access
EO	-	End Office of an Exchange Telephone Company
INS	-	Iowa Network Services, Inc.
IP	-	Iowa Network Premises
IXC	-	Interexchange Carrier
LEC	-	Local Exchange Carrier
PI	-	Customer's Point of Interconnection
SWC	-	Customer's Serving Wire Center

(3) The customer will be charged a Switched Transport rate set forth in Section 6.8.3 following for the transport of a Feature Group D call in the originating and terminating directions between two different Iowa Network premises set forth in Section 8. following that are not located at Iowa Network's central access tandem. The Switched Transport rate is calculated on the airline distance between the V&H coordinates of the two different Iowa Network premises. In addition, the customer will also be charged the Centralized Equal Access Service rate set forth in (C)

TARIFF LIBRARY
UTILITIES DIVISION

6. Switched Access Service (Cont'd)

6.7 Rate Regulations (Cont'd)

6.7.1 Description and Application of Rates and Charges (Cont'd)

(E) Rates Applicable to Feature Group D (Cont'd) (C)

(3) (Cont'd)

Section 6.8.1 following for Feature Group D Switched Access Service. (C)

As a matter of clarification, in addition to the rates and charges set forth in Sections 6.8 and 4(I) for the services provided by Iowa Network, the customer will also be billed access rates and charges by Participating Telephone Companies and, when applicable, other Exchange Telephone Companies in compliance with their tariffs for the provision of Feature Group D Switched Access Service in their operating territories between an Iowa Network premises listed in Section 8. following and the end office(s) served by Iowa Network's central access tandem. For purposes of determining Local Transport measurement, distance will be measured by the Exchange Telephone Companies in compliance with their tariffs from the wire center that normally serves the customer premises to the end office switch(es) of the Participating Telephone Companies. In addition, the (C)

TARIFF LIBRARY
UTILITIES DIVISION

6. Switched Access Service (Cont'd)

6.7 Rate Regulations (Cont'd)

6.7.1 Description and Application of Rates and Charges (Cont'd)

(E) Rates Applicable to Feature Group D (Cont'd) (C)

(3) (Cont'd)

customer may also be billed access rates and charges by the Participating Telephone Companies or other Exchange Telephone Companies in compliance with their tariffs for the provision of Feature Group D Switched Access Service (C) between an Iowa Network premises set forth in Section 8. following and the customer's premises.

The following diagram depicts a generic view of the rates that are applicable when Iowa Network transports a Feature Group D call between two Iowa Network (C) Premises set forth in Section 8. following that are not located at Iowa Network's central access tandem.

TARIFF LIBRARY
UTILITIES DIVISION

6. Switched Access Service (Cont'd)

6.7 Rate Regulations (Cont'd)

6.7.1 Description and Application of Rates and Charges (Cont'd)

(E) Rates Applicable to Feature Group D (Cont'd) (C)

(3) (Cont'd)

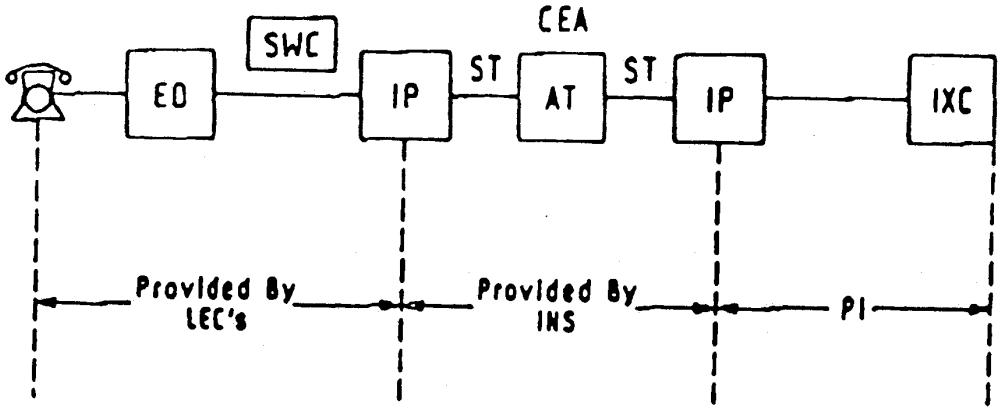

For traffic picked up by Iowa Network at one IP and handed off at another IP.

Switched Transport (ST) and Centralized Equal Access (CEA) is provided by Iowa Network. ST is based on the V&H coordinates of the two IP locations.

(D)

For FGD ... CEA and ST rates apply.

TARIFF LIBRARY
UTILITIES DIVISION

6. Switched Access Service (Cont'd)

6.7 Rate Regulations (Cont'd)

6.7.1 Description and Application of Rates and Charges (Cont'd)

(E) Rates Applicable to Feature Group D (Cont'd) (C)

(3) (Cont'd)

Glossary

AT	-	Iowa Network's Central Access Tandem
CEA	-	Centralized Equal Access
EO	-	End Office of an Exchange Telephone Company
INS	-	Iowa Network Services, Inc.
IP	-	Iowa Network Premises
IXC	-	Interexchange Carrier
LEC	-	Local Exchange Carrier
ST	-	Switched Transport
SWC	-	Customer's Serving Wire Center

The nonrecurring charge, as set forth in Section 6.8.4 following, applies to Feature Group D Switched Access Service for the installation of the Interim NXX Translation optional feature and for each subsequent order received to add or change NXX translation codes. (C)

TARIFF LIBRARY
UTILITIES DIVISION

6. Switched Access Service (Cont'd)

6.7 Rate Regulations (Cont'd)

6.7.2 Minimum Period

Switched Access Service is provided for a minimum period of one (1) month.

6.7.3 Reserved for Future Use

6.7.4 Reserved for Future Use

6.7.5 Change of Feature Group Type

Changes from one type of Feature Group to another will be treated as a discontinuance of one type of service and a start of another. When a customer upgrades a Feature Group B service to Feature Group D service, minimum period obligations will not change, i.e., the time elapsed in the existing minimum period obligations will be credited to the minimum period obligations for Feature Group D service. For all other changes from one type of Feature Group to another, new minimum period obligations will be established. (C)

6.7.6 Mileage Measurement

The mileage to be used to determine the monthly rate for Iowa Network's Switched Transport Rate is calculated on the airline distance between an Iowa Network premises listed in Section 8. following where the call carried by Iowa Network is delivered or received and another Iowa Network premises listed in Section 8. following. The V&H coordinates method is used to determine mileage between two Iowa Network premises. The V&H coordinates for Iowa Network premises are set forth in Section 8. following.

TARIFF LIBRARY
UTILITIES DIVISION

6. Switched Access Service (Cont'd)

6.7 Rate Regulations (Cont'd)

6.7.6 Mileage Measurement (Cont'd)

The mileage rate is as set forth in 6.8.3 following. To determine the rate to be billed, first compute the airline mileage using the V&H coordinates method. If the calculation results in a fraction of a mile, always round up to the next whole mile before determining the mileage and applying the rates. Then multiply the mileage by the appropriate rate. The Switched Transport rate is applied to Feature Group B and Feature Group D Switched Access Services when Iowa Network provides transport in the manner described in Sections 6.1.3(B), 6.7.1(D), and 6.7.1(E) preceding. (C)

(A) Five-Mile Rule

When a non-AT&T customer premises or a non-Northwestern Bell Telephone Company premises is within five (5) miles of an AT&T Class 4 office or a Northwestern Bell Telephone Company toll office, the Local Transport mileage for a call which is carried over a Switched Access Service of an Exchange Telephone Company, originating or terminating through an end office switch of a Participating Telephone Company listed in Section 9. following, shall be the distance as would be determined from that end office switch to the serving wire center for that AT&T Class 4 office or Northwestern Bell Telephone Company toll station unless the customer specifies that for an entire LATA, it wants all measurements determined from its serving wire center. This designation (i.e., which serving wire center to use in

TARIFF LIBRARY
UTILITIES DIVISION

6. Switched Access Service (Cont'd)

6.7 Rate Regulations (Cont'd)

6.7.6 Mileage Measurement (Cont'd)

(A) Five-Mile Rule (Cont'd)

calculating mileage) may be changed only once in any twelve (12) month period. Such change will be made without charge(s) to the customer.

6.7.7 Measuring Access Minutes

Customer traffic to end offices of the Participating Telephone Companies set forth in Section 9. following will be measured (i.e., recorded) by Iowa Network at its central access tandem. Originating and terminating calls will be measured (i.e., recorded) by Iowa Network to determine the basis for computing chargeable access minutes. In the event the customer message detail is not available because Iowa Network lost or damaged tapes or incurred recording system outages, Iowa Network will estimate the volume of lost customer access minutes of use based on previously known values. For terminating and (C)
originating calls over FGB and FGD, the measured
minutes are the chargeable access minutes. (C)

(D)

(D)

TARIFF LIBRARY
UTILITIES DIVISION

6. Switched Access Service (Cont'd)

6.7 Rate Regulations (Cont'd)

6.7.7 Measuring Access Minutes (Cont'd)

(D)

(D)

TARIFF LIBRARY
UTILITIES DIVISION

6. Switched Access Service (Cont'd)

6.7 Rate Regulations (Cont'd)

6.7.7 Measuring Access Minutes (Cont'd)

(D)

(D)

FGB and FGD access minutes or fractions value of the fraction being a function of the switch technology where the measurement is made, are accumulated over the billing period for each end office, and are then rounded up to the nearest access minute for each end office. (C)

6. Switched Access Service (Cont'd)

6.7 Rate Regulations (Cont'd)

6.7.7 Measuring Access Minutes (Cont'd)

(A) Reserved for Future Use

(B) Feature Group B Usage Measurement

For originating calls over FGB, usage measurement begins when Iowa Network's central access tandem receives trunk seizure acknowledgement from the customer's switch indicating the customer is ready to receive the call.

The measurement of originating call usage over FGB ends when Iowa Network's central access tandem receives disconnect supervision from either the originating end user's end office, indicating the originating end user has disconnected, or the customer's switch, whichever is recognized first by Iowa Network's central access tandem.

For terminating calls over FGB, the measurement of access minutes begins when the terminating FGB first point of switching receives answer supervision from the terminating end user's end office, indicating the terminating end user has answered. The measurement of terminating call usage over FGB ends when Iowa Network's central access tandem receives disconnect supervision from either the terminating end user's end office, indicating the terminating end user has disconnected, or the customer's switch, whichever is recognized first by Iowa Network's central access tandem.

TARIFF LIBRARY
UTILITIES DIVISION

6. Switched Access Service (Cont'd)

6.7 Rate Regulations (Cont'd)

6.7.7 Measuring Access Minutes (Cont'd)

(C) Reserved for Future Use (C)

(D)

(D)

TF - 92-401

6. Switched Access Service (Cont'd)

6.7 Rate Regulations (Cont'd)

TARIFF LIBRARY
UTILITIES DIVISION

6.7.7 Measuring Access Minutes (Cont'd)

(C) Reserved for Future Use

(D) Feature Group D Usage Measurement

For originating calls over FGD with multi- (C)
frequency address signaling, usage measure- (C)
ment begins when Iowa Network's central
access tandem receives the first wink
supervisory signal forwarded from the
customer's switch. For originating calls (N)
over FGD with CCSA, usage measurement begins |
when either the Exit Message (EXM) or Address
Complete Message (ACM) is received. The mea- (N)
surement of originating call usage over FGD
ends when Iowa Network's central access tandem
receives disconnect supervision from either the
originating end user's end office, indicating
the originating end user has disconnected,
or the customer's switch, whichever is
recognized first by Iowa Network's central
access tandem.

For terminating calls over FGD, the
measurement of access minutes begins when the
terminating FGD first point of switching
receives answer supervision from the
terminating end user's end office, indicating
the terminating end user has answered.

6. Switched Access Service (Cont'd)

6.7 Rate Regulations (Cont'd)

6.7.7 Measuring Access Minutes (Cont'd)

(D) Feature Group D Usage Measurement (Cont'd)

The measurement of terminating call usage over FGD ends when Iowa Network's central access tandem receives disconnect supervision from either the terminating end user's end office, indicating the terminating end user has disconnected, or the customer's switch, whichever is recognized first by Iowa Network's central access tandem.

6.7.8 Network Blocking Rate for Feature Group D

The customer will be notified by Iowa Network to increase its busy hour minutes of capacity when excessive trunk group blocking occurs on groups carrying Feature Group D traffic and the measured access minutes for that hour exceed that purchased. Excessive trunk group blocking occurs when the blocking thresholds stated below are exceeded. They are predicated on time consistent, hourly measurements over a thirty (30) day period excluding Saturdays, Sundays and national holidays. If the order for additional capacity has not been received by Iowa Network within fifteen (15) days of the notification, Iowa Network will bill the customer, at the rate set forth in 6.8.2 following, for each overflow in excess of the blocking threshold when (1) the average "30-day period" overflow exceeds the threshold level for any particular hour and (2) the "30-day period" measured average originating or two-way usage for the same clock hour exceeds the capacity purchased.

6. Switched Access Service (Cont'd)

6.7 Rate Regulations (Cont'd)

6.7.8 Network Blocking Rate for Feature Group D (Cont'd)

Blocking Thresholds

Trunks in Service	1/2%
1-2	.045
3-4	.035
5-6	.025
7 or greater	.020

6.7.9 Reserved for Future Use

6.7.10 Reserved for Future Use

6.7.11 Reserved for Future Use

6.7.12 Reserved for Future Use

6.7.13 Reserved for Future Use

TARIFF LIBRARY
UTILITIES DIVISION

6. Switched Access Service (Cont'd)

6.8 Rates and Charges

6.8.1	Centralized Equal Access Service	Rate Per Access Minute
		$0.0114
6.8.2	Network Blocking	Rate Per Call Blocked
		$0.0075
6.8.3	Switched Transport	Rate Per Access Minute Per Mile
		$0.000103
6.8.4	Nonrecurring Charges	(T)
	(A) Installation	Rate Per Trunk (N)
	Activation of the first trunk or SNAC contained in an access service order.	$514.68
	Activation of each additional trunk or SNAC contained in the same order.	$12.55 (N)
	(B) Interim 800 Translation	Rate Per Order
		$192.21

Issued: November 16, 1992 Effective: DEC 16 1992

By: William P. Bagley
General Manager
4201 Corporate Drive
West Des Moines, Iowa 50266

7.

RESERVED FOR FUTURE USE

TARIFF LIBRARY
UTILITIES DIVISION

IOWA TARIFF NO. 1
ACCESS SERVICE

TF- 89-371

Iowa Network Services, Inc. Telephone Tariff
Filed with the Board

Corrected 1st Revised Page 227
Cancels Original Page 227

8. Customer's Point of Interconnection Information

8.1 General Information

Access Service is available to customers that interconnect with Iowa Network's facilities at either Iowa Network's central access tandem or another Iowa Network premises listed in this section on which the central offices of the Participating Telephone Companies home their traffic. As ordered by the Board on page 15 of its Final Decision and Order issued on October 18, 1988 in Docket No. RPU-88-2, the customer is responsible for and bears the burden of reaching a point of interconnection with one or more of the Iowa Network premises listed below.

8.2 Customer's Point of Interconnection

Central Access Tandem	Iowa Network Premises	V-Cord	H-Cord	Mileage	
Des Moines	Cedar Rapids	6262	4021	104	
Des Moines	Clarinda	6733	4413	93	
Des Moines	Creston	6625	4339	52	
Des Moines	Davenport	6273	3818	158	(C)
Des Moines	Des Moines	6472	4275	---	
Des Moines	Fort Dodge	6328	4437	69	
Des Moines	Grinnell	6378	4154	48	
Des Moines	Knoxville	6489	4172	33	
Des Moines	Mason City	6135	4351	109	
Des Moines	Mount Ayr	6685	4290	68	(C)

Issued: August 15, 1989

Effective: SEP 14 1989

By: William P. Bagley
General Manager
Suite 140
2700 Westown Parkway
West Des Moines, Iowa 50265

TF- 89-371

TARIFF LIBRARY
UTILITIES DIVISION

8. Customer's Point of Interconnection Information (Cont'd)

8.2 Customer's Point of Interconnection (Cont'd)

Central Access Tandem	Iowa Network Premises	V-Cord	H-Cord	Mileage	
Des Moines	Mount Pleasant	6453	3909	116	
Des Moines	Newton	6411	4199	31	
Des Moines	Osceola	6590	4247	38	
Des Moines	Omaha	6687	4595	122	(C)
Des Moines	Sioux City	6468	4767	156	
Des Moines	Spencer	6262	4634	132	

TF - 89-1341

TARIFF LIBRARY
UTILITIES DIVISION

9. Participating Telephone Companies

Iowa Network is an affiliate of one hundred twenty-eight (128) Exchange Telephone Companies operating in the State of Iowa. (D)
(D)

9.1 Exchanges and Localities

The names of the Participating Telephone Companies (PTCs) are as follows: (C)

(D)
(C)

PTCs

Ace Telephone Association

Amana Society Service Company

Andrew Telephone Company, Inc.

Arcadia Telephone Cooperative

Atkins Telephone Company, Inc.

Ayrshire Farmers Mutual Telephone Co.

Baldwin-Nashville Telephone Co., Inc.

Bernard Telephone Company, Inc.

Brooklyn Mutual Telephone Co.

Butler-Bremer Mutual Telephone Company (C)

TF - 89-134

TARIFF LIBRARY
UTILITIES DIVISION

9. Participating Telephone Companies (Cont'd)

9.1 Exchanges and Localities (Cont'd)

PTCs (D) (C)

Cascade Telephone Company

Casey Mutual Telephone Co.

Center Junction Telephone Co.

Central Scott Telephone Company

Citizens Mutual Telephone Company

Clarence Telephone Company, Inc.

Clear Lake Independent Telephone Company

C-M-L Telephone Cooperative Association Of Meriden, Iowa

Coon Creek Telephone Company

Coon Valley Cooperative Telephone Association, Inc.

Cooperative Telephone Company

Cooperative Telephone Exchange

Corn Belt Telephone Company

Cumberland Telephone Company

Danville Mutual Telephone Company (C)

9. Participating Telephone Companies (Cont'd)

9.1 Exchanges and Localities (Cont'd)

PTCs (D) (C)

Deep River Mutual Telephone Co.

Defiance Telephone Company

Dumont Telephone Company

East Buchanan Telephone Cooperative

Ellsworth Cooperative Telephone Association

Farmer's and Businessmen's Telephone Company

Farmers Cooperative Telephone Co.

Farmers Mutual Cooperative Telephone Co. (Harlan)

Farmers Mutual Cooperative Telephone Co. (Moulton)

Farmers Mutual Telephone Co. (Nora Springs)

Farmers Mutual Telephone Co. (Shellsburg)

Farmers Mutual Telephone Co. (Stanton)

Farmers Telephone Company (Batavia) (C)

TF - 89-134

TARIFF LIBRARY
UTILITIES DIVISION

9. Participating Telephone Companies (Cont'd)

9.1 Exchanges and Localities (Cont'd)

PTCs (D) (C)

Farmers Telephone Company (Essex)

Farmers Telephone Company (Nora Springs)

Fenton Cooperative Telephone Company

Goldfield Telephone Company

Grand Mound Cooperative Telephone Association

Grand River Mutual Telephone Corporation

Griswold Cooperative Telephone Company

Hawkeye Telephone Company

Heart of Iowa Telephone Cooperative

Hills Telephone Company

Hospers Telephone Exchange, Inc.

Hubbard Cooperative Telephone Association

Huxley Cooperative Telephone Co. (C)

TF - 89-134
TARIFF LIBRARY
UTILITIES DIVISION

9. Participating Telephone Companies (Cont'd)

9.1 Exchanges and Localities (Cont'd)

PTCs (D) (C)

Iamo Telephone Company

Interstate 35 Telephone Company

Jefferson Telephone Company

Jordan-Soldier Valley Cooperative Telephone Company

Kalona Cooperative Telephone Company

Keystone Farmers Cooperative Telephone Company

La Porte City Telephone Company

Lehigh Valley Cooperative Telephone Association

Lone Rock Cooperative Telephone Company

Lost Nation-Elwood Telephone Co.

Lynnville Community Telephone Co., Inc.

Manilla Telephone Company

Marne & Elk Horn Telephone Co. (C)

TF - 89-1341
TARIFF LIBRARY
UTILITIES DIVISION

9. Participating Telephone Companies (Cont'd)

9.1 Exchanges and Localities (Cont'd)

PTCs (D) (C)

Martelle Cooperative Telephone Association

Massena Telephone Company

Mechanicsville Telephone Company

Mediapolis Telephone Company

Miles Cooperative Telephone Association

Minburn Telephone Company

Minerva Valley Telephone Co., Inc.

Modern Cooperative Telephone Co.

Montezuma Mutual Telephone Co.

Mutual Telephone Company

Mutual Telephone Company of Morning Sun

North English Cooperative Telephone Company

Northeast Iowa Telephone Co.

Northern Iowa Telephone Company (C)

TF - 89-134

TARIFF LIBRARY
UTILITIES DIVISION

9. Participating Telephone Companies (Cont'd)

9.1 Exchanges and Localities (Cont'd)

(D)
(C)

PTCs

Northwest Telephone Cooperative Association

Norway Rural Telephone Company

Ogden Telephone Company

Olin Telephone Company, Inc.

Onslow Cooperative Telephone Association

Oran Mutual Telephone Company

Palmer Mutual Telephone Company

Palo Cooperative Telephone Association

Panora Cooperative Telephone Association, Inc.

Peoples Telephone Company

Postville Telephone Company

~~Prairie Telephone Co., Inc.~~

Prairieburg Telephone Co., Inc.

Preston Telephone Company (C)

TF - 89-134

IOWA TARIFF NO. 1
ACCESS SERVICE

TARIFF LIBRARY
UTILITIES DIVISION

Iowa Network Services, Inc. Telephone Tariff
Filed with the Board

1st Revised Page 236
Cancels Original Page 236

9. Participating Telephone Companies (Cont'd)

9.1 Exchanges and Localities (Cont'd)

(D)
(C)

PTCs

Radcliffe Telephone Co., Inc.

Readlyn Telephone Company

Ringsted Telephone Company

~~River Valley Telephone Co-op~~

Rockwell Cooperative Telephone Association

Ruthven Telephone Exchange Co.

Sac County Mutual Telephone Co.

Schaller Telephone Company

Schuyler Telephone Company

Sharon Telephone Company

Shell Rock Telephone Company

South Slope Cooperative Telephone Company, Inc.

Southwest Telephone Exchange, Inc.

Springville Cooperative Telephone Association, Inc.

Stratford Mutual Telephone Co. (C)

Issued: April 24, 1989

Effective: MAY 24 1989

By: William P. Bagley
General Manager
Suite 140
2700 Westown Parkway
West Des Moines, Iowa 50265

TF - 89-134

TARIFF LIBRARY
UTILITIES DIVISION

9. Participating Telephone Companies (Cont'd)

9.1 Exchanges and Localities (Cont'd)

PTCs (D) (C)

Sully Telephone Association

Swisher Telephone Company

Templeton Telephone Company

Terrill Telephone Company

The Burt Telephone Company

Titonka Telephone Company

United Farmers Telephone Co.

Van Buren Telephone Co., Inc.

Van Horne Cooperative Telephone Co.

Venture Telephone Company, Inc.

Walnut Telephone Company

Webb-Dickens Telephone Corp.

Wellman Cooperative Telephone Association

West Iowa Telephone Company

West Liberty Telephone Company
and West Branch Telephone Co. (C)

TF - 89-134

TARIFF LIBRARY
UTILITIES DIVISION

9. Participating Telephone Companies (Cont'd)

9.1 Exchanges and Localities (Cont'd)

PTCs (D) (C)

Western Iowa Telephone Association

Westside Independent Telephone Co.

Wilton Telephone Company

Winnebago Cooperative Telephone Association

Woolstock Mutual Telephone Association

Wyoming Mutual Telephone Company

Participating Companies Total - 128 (C)

TF - 89-1341

TARIFF LIBRARY
UTILITIES DIVISION

IOWA TARIFF NO. 1
ACCESS SERVICE

Iowa Network Services, Inc. Telephone Tariff
Filed with the Board

1st Revised Page 239
Cancels Original Page 239

10. (C)

(D)

(D)

RESERVED FOR FUTURE USE

Issued: April 24, 1989

Effective:

By: William P. Bagley
General Manager
Suite 140
2700 Westown Parkway
West Des Moines, Iowa 50265

11.

RESERVED FOR FUTURE USE

12.

RESERVED FOR FUTURE USE

13. Additional Engineering, Additional Labor and Miscellaneous Services

In this section, normally scheduled working hours are an employee's scheduled work period in any given calendar day (e.g., 7:00 a.m. to 4:00 p.m.) for the application of rates based on working hours. A Miscellaneous Service Order Charge, as described in Section 5.2.2 preceding, applies to any service, or combination of services ordered simultaneously from this section of the Tariff for which a service order is not already pending which does not have the charge applied. The Miscellaneous Service Order Charge is an administrative charge designed to compensate for the expenses associated with service order issuance.

The charge always applies to the following services since a pending service order would not exist: Overtime Repair (13.2.2), Stand by Repair (13.2.3), Testing and Maintenance with Other Telephone Companies other than when in conjunction with Acceptance Testing (13.2.4), Other Labor (13.2.5) and Maintenance of Service (13.3.1).

The charge does not apply to the following services since there would exist a pending service order: Additional Engineering (13.1), Overtime Installation (13.2.1), Stand by Acceptance Testing (13.2.3), Testing and Maintenance with Exchange Telephone Companies when in conjunction with Acceptance Testing (13.2.4), and Additional Cooperative Acceptance Testing [13.3.4(A)(1) and 13.3.4(B)(1)]. This charge is as follows:

- Miscellaneous Service Order Charge, per occurrence $27.00

13. Additional Engineering, Additional Labor and Miscellaneous Services (Cont'd)

13.1 Additional Engineering

Additional Engineering will be provided by Iowa Network at the request of the customer only when:

(A) A customer requests additional technical information after Iowa Network has already provided the technical information normally included on the Design Layout Report (DLR) as set forth in 6.1.4 preceding.

(B) Reserved for Future Use

(C) A customer requests a Design Change, additional engineering time is incurred by Iowa Network for the engineering review as set forth in 5.2.2(C). The charge for additional engineering will apply whether or not Iowa Network proceeds with the design change.

Iowa Network will notify the customer that additional engineering charges, as set forth in 13.1.1 following, will apply before any additional engineering is undertaken.

13.1.1 Rates For Additional Engineering

The charges for additional engineering are as follows:

13. Additional Engineering, Additional Labor and Miscellaneous Services (Cont'd)

13.1 Additional Engineering (Cont'd)

13.1.1 Rates For Additional Engineering (Cont'd)

Additional Engineering Periods	Each Half Hour or Fraction Thereof
(A) Basic Time, normally scheduled working hours, per engineer	$15.74
(B) Overtime, outside of regularly scheduled working hours, per engineer	$23.61
(C) Premium time outside of scheduled work day, per engineer	$31.48

13. Additional Engineering, Additional Labor and Miscellaneous Services (Cont'd)

13.2 Additional Labor

Additional labor is that labor requested by the customer on a given service and agreed to by Iowa Network as set forth in 13.2.1 through 13.2.5 following. Iowa Network will notify the customer that additional labor charges as set forth in 13.2.6 following will apply before any additional labor is undertaken.

13.2.1 Overtime Installation

Overtime installation is that Iowa Network installation effort outside of regularly scheduled working hours.

13.2.2 Overtime Repair

Overtime repair is that Iowa Network maintenance effort performed outside of regularly scheduled working hours.

13.2.3 Stand By

Stand by includes all time in excess of one-half (1/2) hour during which Iowa Network personnel stand by to make installation acceptance tests or cooperative tests with a customer to verify facility repair on a given service.

13.2.4 Testing and Maintenance with Exchange Telephone Companies

Additional testing, maintenance or repair of facilities which connect to facilities of Exchange Telephone Companies which is in addition to normal effort required to test, maintain or repair facilities provided solely by Iowa Network.

13. Additional Engineering, Additional Labor and Miscellaneous Services (Cont'd)

13.2 Additional Labor (Cont'd)

13.2.5 Other Labor

Other labor is that additional labor not included in 13.2.1 through 13.2.4 preceding and labor incurred to accommodate a specific customer request that involves only labor which is not covered by any other section of this tariff.

13.2.6 Rates for Additional Labor

The charges for additional labor are as follows:

(A) Installation or Repair

Additional Labor Periods	Each Half Hour or Fraction Thereof
- Overtime, outside of regularly scheduled working hours, on a scheduled work day, per technician	$23.51*
- Premium Time, outside of scheduled work day, per technician	$31.34*

*A call-out of an Iowa Network employee at a time not consecutive with the employee's scheduled work period is subject to a minimum charge of four (4) hours.

13. Additional Engineering, Additional Labor and Miscellaneous Services (Cont'd)

13.2 Additional Labor (Cont'd)

13.2.6 Rates for Additional Labor (Cont'd)

(B) Stand by

Additional Labor Periods	Each Half Hour or Fraction Thereof
- Basic time, regularly scheduled working hours, per technician	$16.14
- Overtime, outside of regularly scheduled working hours, on a scheduled work day, per technician	$24.21*
- Premium Time, outside of scheduled work day, per technician	$32.28*

*A call-out of an Iowa Network employee at a time not consecutive with the employee's scheduled work period is subject to a minimum charge of four (4) hours.

13. Additional Engineering, Additional Labor and Miscellaneous Services (Cont'd)

13.2 Additional Labor (Cont'd)

13.2.6 Rates for Additional Labor (Cont'd)

The charges for additional labor are as follows:

Additional Labor Periods	Each Half Hour or Fraction Thereof	
	Installation and Repair Technician	Central Access Tandem Maintenance Technician
(C) Testing and Maintenance with Exchange Telephone Companies, or Other Labor		
- Basic Time, regularly scheduled working hours, per technician	$15.67	$15.85
- Overtime, outside of regularly scheduled working hours on a scheduled work day, per technician	$21.51*	$23.78*
- Premium Time, outside of scheduled work day, per technician	$31.34*	$31.70*

*A call-out of an Iowa Network employee at a time not consecutive with the employee's scheduled work period is subject to a minimum charge of four (4) hours.

13. Additional Engineering, Additional Labor and Miscellaneous Services (Cont'd)

13.3 Miscellaneous Services

13.3.1 Maintenance of Service

(A) When a customer reports a trouble to Iowa Network for clearance and no trouble is found in Iowa Network's facilities, the customer shall be responsible for payment of a Maintenance of Service charge for the period of time from when Iowa Network personnel are dispatched to the customer point of interconnection to when the work is completed. Failure of Iowa Network personnel to find trouble in Iowa Network facilities will result in no charge if the trouble is actually in those facilities, but not discovered at the time.

(B) The customer shall be responsible for payment of a Maintenance of Service charge when Iowa Network dispatches personnel to the customer point of interconnection and the trouble is in equipment or communications systems provided by other than Iowa Network.

In either (A) or (B) preceding, no credit allowance will be applicable for the interruption involved if the Maintenance of Service charge applies.

13. Additional Engineering, Additional Labor and Miscellaneous Services (Cont'd)

13.3 Miscellaneous Services (Cont'd)

13.3.1 Maintenance of Service (Cont'd)

(C) The charges for Maintenance of Service are as follows:

Maintenance of Service Periods	Each Half Hour or Fraction Thereof
Basic Time, Overtime* and Premium Time*	See the rates for Additional Labor set forth in 13.2.6(C) preceding.

13.3.2 Reserved for Future Use

13.3.3 Reserved for Future Use

13.3.4 Testing Services

Iowa Network will, in addition to any customer requested acceptance testing, perform such tests as it believes necessary to ensure that the access services ordered by a customer are functioning properly prior to furnishing such access services to the customer. In addition, Iowa Network, as part of the ongoing work to maintain the continued satisfactory performance of the access services ordered by the customer, may perform periodic tests.

*A call-out of an Iowa Network employee at a time not consecutive with the employee's scheduled work period is subject to a minimum charge of four (4) hours.

13. Additional Engineering, Additional Labor and Miscellaneous Services (Cont'd)

13.3 Miscellaneous Services (Cont'd)

13.3.4 Testing Services (Cont'd)

Testing Services offered under this section of the tariff are optional and subject to rates and charges as set forth in 13.3.4(C) following. Other testing services, as described in 6.1.5 and 6.1.6 preceding, are provided by Iowa Network in association with Access Services and are furnished at no additional charge. Testing Services are normally provided by Iowa Network personnel at Iowa Network locations. In addition, Iowa Network will, at the request of the customer, perform Acceptance Testing with the customer in accordance with the provisions set forth in Section 6. preceding.

The offering of Testing Services under this section of the Tariff is made subject to the availability of the necessary qualified personnel and test equipment at the various test locations mentioned in (A), (B) and (C) following.

(A) Switched Access Service

Testing Services for Switched Access are comprised of (a) tests which are performed during the installation of a Switched Access Service, and (b) tests which are performed after acceptance of such access services by a customer, i.e., in-service tests. These in-service tests may be further divided into two broad categories of tests: scheduled and nonscheduled.

13. Additional Engineering, Additional Labor and Miscellaneous Services (Cont'd)

13.3 Miscellaneous Services (Cont'd)

13.3.4 Testing Services (Cont'd)

(A) Switched Access Service (Cont'd)

Scheduled tests are those tests performed by Iowa Network on a regular basis, as set forth in Section 6.1.6 preceding which are required to maintain Switched Access Service. Scheduled tests may be done on an automatic basis (no Iowa Network or customer technicians involved) or on a cooperative basis (Iowa Network technician(s) involved at Iowa Network office(s) and customer technicians involved at customer terminal location(s)).

(1) Additional Cooperative Acceptance Testing

Additional Cooperative Acceptance Testing (ACAT) of Switched Access Service involves Iowa Network provision of a technician at its office(s) and the customer provides a technician at its terminal location(s), with suitable test equipment to perform the required tests.

Additional Cooperative Acceptance Tests may, for example, consist of the following tests:

13. Additional Engineering, Additional Labor and Miscellaneous Services (Cont'd)

13.3 Miscellaneous Services (Cont'd)

13.3.4 Testing Services (Cont'd)

(A) Switched Access Service (Cont'd)

(1) Additional Cooperative Acceptance Testing (Cont'd)

. C-Notched Noise
. Impulse Noise
. Phase Jitter
. Signal to C-Notched Noise Ratio
. Intermodulation (Nonlinear) Distortion
. Frequency Shift (Offset)
. Envelope Delay Distortion
. Dial Pulse Percent Break

(2) Additional Automatic Testing

Additional Automatic Testing (AAT) of Switched Access Services (Feature Groups B, C and D), where the customer provides remote office test lines and 105 test lines with associated responders or their functional equivalent, will consist of monthly loss and C-message noise tests and an annual balance test. However, the customer may specify a more frequent schedule of tests. In addition to the loss/noise/balance tests, the customer may also order,at additional charges, gain-slope and C-notched noise testing.

13. Additional Engineering, Additional Labor and Miscellaneous Services (Cont'd)

13.3 Miscellaneous Services (Cont'd)

13.3.4 Testing Services (Cont'd)

(A) Switched Access Service (Cont'd)

(2) Additional Automatic Testing (Cont'd)

Iowa Network will provide an AAT report that lists the test results for each trunk tested. Trunk test failures requiring customer participation for trouble resolution will be provided to the customer on an as-occurs basis.

(3) Reserved for Future Use

(4) Obligations of the Customer

(a) The customer shall provide the Remote Office Test Line priming data to Iowa Network as appropriate, to support AAT as set forth in 13.3.4(A)(2) preceding.

(b) Reserved for Future Use

(B) Reserved for Future Use

(C) Rates and Charges

(1) Switched Access

13. Additional Engineering, Additional Labor and Miscellaneous Services (Cont'd)

13.3 Miscellaneous Services (Cont'd)

13.3.4 Testing Services (Cont'd)

(C) Rates and Charges (Cont'd)

(1) Switched Access (Cont'd)

(a) Additional Cooperative Acceptance Testing

Testing Period	Each Half Hour or Fraction Thereof
Basic Time, Overtime* and Premium Time*	See the rates for Additional Labor as set forth in 13.2.6(C) preceding.

*A call-out of an Iowa Network employee at a time not consecutive with the employee's scheduled work period is subject to a minimum charge of four (4) hours.

13. Additional Engineering, Additional Labor and Miscellaneous Services (Cont'd)

13.3 Miscellaneous Services (Cont'd)

13.3.4 Testing Services (Cont'd)

(C) Rates and Charges (Cont'd)

(1) Switched Access (Cont'd)

(b) Additional Automatic Testing (AAT)

The Additional Tests as set forth following may be ordered by the customer, at additional charges, 60 days prior to the start of the customer precribed schedule.

To First Point of Switching

Additional Tests

	Per Test Per Transmission Path
Gain-Slope Tests	$2.89
C-Notched Noise Tests	$2.89
1004 Hz Loss*	$2.89
C-Message Noise*	$2.89
Balance (return loss)*	$2.89

* 1004 Hz Loss, C-Message Noise and Balance are non-chargeable routine tests, however, they may be requested on an as needed or more than routine scheduled basis, in which case the charges herein apply.

TARIFF LIBRARY
UTILITIES DIVISION

13. Additional Engineering, Additional Labor and Miscellaneous Services (Cont'd)

13.3 Miscellaneous Services (Cont'd)

13.3.5 Provision of Access Service Billing Information

(A) The customer will receive its monthly bills in a standard paper format. The customer may receive usage detail on 5 1/4 or 3 1/2 inch floppy diskette in lieu of paper upon request and for no additional charge. (C)

(B) At the option of the customer, and for an additional charge:

(1) Customer monthly usage detail in support of the monthly bill may be provided on magnetic tape. (C)

(2) Billing detail and/or information may be transmitted to the customer terminal location by data transmission.

(3) Additional copies of the customer monthly bill or billing detail may be provided in standard paper or on 5 1/4 or 3 1/2 inch floppy diskette format. (C)

(C) Upon acceptance by Iowa Network of an order for data transmission, Iowa Network will determine the period of time to implement the transmission of such material on an individual order basis.

(D) The rates and charges for the provision of Access Service Billing Information are as follows:

13. Additional Engineering, Additional Labor and Miscellaneous Services (Cont'd)

TARIFF LIBRARY
UTILITIES DIVISION

13.3 Miscellaneous Services (Cont'd)

13.3.5 Provision of Access Service Billing Information (Cont'd)

(D) (Cont'd)

	FID	Rates	
(1) Provision of Standard Bill Detail and/or Information in magnetic tape format, per record	DMT	ICB rates and charges apply	(T)
(2) Data Transmission to a customer Terminal Location of Bill Detail and/or Information, per record transmitted	TRMD B	ICB rates and charges apply	
(3) Additional Copies of customer monthly bill or bill detail in standard paper format, or 5 1/4 inch or 3 1/2 inch floppy diskette			(C)
per page	BOD NEL		(C)
per diskette	BOD FH	ICB rates and charges apply	(C)

13.3.6 Reserved for Future Use

By: William P. Bagley
General Manager
4201 Corporate Drive
West Des Moines, Iowa 50266

14.

RESERVED FOR FUTURE USE

15. Interface Groups, Transmission Specifications and Channel Interfaces

15.1 Switched Transport Interface Groups

Interface Group 6 is provided with Type A or B Transmission Specifications, depending on the Feature Group. This Interface Group is provided with Data Transmission Parameters.

Only certain interfaces are available at the customer's points of interconnection set forth in Section 8. preceding. The interfaces associated with the Interface Group may vary among Feature Groups. The various interfaces which are available with the Interface Group, and the Feature Groups with which it may be used, are set forth in 15.1.11 following.

15.1.1 Reserved for Future Use

15.1.2 Reserved for Future Use

15.1.3 Reserved for Future Use

15.1.4 Reserved for Future Use

15.1.5 Reserved for Future Use

15.1.6 Interface Group 6

Interface Group 6 provides DS1 level digital transmission at the points of interconnection set forth in Section 8. preceding. The interface is capable of transmitting electrical signals at a nominal 1.544 Mbps, with the capability to channelize up to twenty-four (24) voice frequency transmission paths. When analog switching utilizing analog terminations is provided, Iowa Network will provide multiplex and

15. Interface Groups, Transmission Specifications and Channel Interfaces (Cont'd)

15.1.6 Interface Group 6 (Cont'd)

channel bank equipment to derive twenty-four (24) transmission paths of a frequency bandwidth of approximately three hundred (300) to three thousand (3000) Hz. When digital switching or analog switching with digital carrier terminations is provided, Iowa Network will provide, at the first point of switching, a DS1 signal in D3/D4 format.

The interface is provided with individual transmission path bit stream supervisory signaling.

15.1.7 Reserved for Future Use

15.1.8 Reserved for Future Use

15.1.9 Reserved for Future Use

15.1.10 Reserved for Future Use

TF - 90-185

15. Interface Groups, Transmission Specifications and Channel Interfaces (Cont'd)

TARIFF LIBRARY
UTILITIES DIVISION

15.1 Switched Transport Interface Groups (Cont'd)

15.1.11 Available Interface Codes

Following is a matrix showing, for the Interface Group, which interface codes are available as a function of Iowa Network switch supervisory signaling and Feature Group. For explanations of these codes, see the Glossary of Channel Interface Codes in 15.3 following.

Interface Group	Telephone Company Switch Supervisory Signaling	Interface Code	Feature Group B	Feature Group D	
6	RV, EA, EB, EC	4DS9-15	X	X	(C)
	RV, EA, EB, EC	4DS9-15L	X	X	(C)

15.1.12 Supervisory Signaling

This Interface Group may, at the option of the customer, be provided with individual transmission path SF supervisory signaling where such signaling is available in Iowa Network's central access tandem. Generally, such signaling is available only where Iowa Network's central access tandem provides an analog, i.e. non-digital, interface and a portion of the facility provided by the customer between Iowa Network's central access tandem and the customer's premises is analog.

15. Interface Groups, Transmission Specifications and Channel Interfaces (Cont'd)

15.2 Transmission Specification Switched Access Service

TARIFF LIBRARY
UTILITIES DIVISION

15.2.1 Standard Transmission Specifications

Following are descriptions of the two Standard Transmission Specifications available with Switched Access Service Feature Groups. The specific applications in terms of the Feature Groups are set forth in 6.2.2(B) and 6.2.4(B) preceding. (C)

(A) Transmission Specifications

Type A Transmission Specifications is provided with the following parameters:

(1) Loss Deviation

The maximum Loss Deviation of the 1004 Hz loss relative to the Expected Measured Loss (EML) is ±2.0 dB.

(2) Attenuation Distortion

The maximum Attenuation Distortion in the 404 to 2804 Hz frequency band relative to the loss at 1004 Hz is -1.0 dB to +3.0 dB.

(3) C-Message Noise

The maximum C-Message Noise for the transmission path at the route miles listed is less than or equal to:

15. Interface Groups, Transmission Specifications and Channel Interfaces (Cont'd)

15.2 Transmission Specifications Switched Access Service (Cont'd)

15.2.1 Standard Transmission Specifications (Cont'd)

(A) Type A Transmission Specifications (Cont'd)

(3) C-Message Noise (Cont'd)

Route Miles	C-Message Noise
Less than 50	32 dBrnCO
51 to 100	34 dBrnCO
101 to 200	37 dBrnCO
201 to 400	40 dBrnCO
401 to 1000	42 dBrnCO

(4) C-Notched Noise

The maximum C-Notched Noise, utilizing a -16 dBmO holding tone, is less than or equal to 45 dBrnCO.

(5) Echo Control

Echo Control, identified as Equal Level Echo Path Loss, and expressed as Echo Return Loss and Singing Return Loss, is equal to or greater than the following:

Echo Return Loss	Singing Return Loss
16 dB	11 dB

(6) Reserved for Future Use

15. Interface Groups, Transmission Specifications and Channel Interfaces (Cont'd)

TARIFF LIBRARY
UTILITIES DIVISION

15.2 Transmission Specification Switched Access Service

15.2.1 Standard Transmission Specifications

(B) Type B Transmission Specifications

Type B Transmission Specifications are provided with the following parameters:

(1) Loss Deviation

The maximum Loss Deviation of the 1004 Hz loss relative to the Expected Measured Loss (EML) is ±2.5 dB.

(2) Attenuation Distortion

The maximum Attenuation Distortion in the 404 to 2804 Hz frequency band relative to loss at 1004 Hz is -2.0 dB to +4.0 dB.

(3) C-Message Noise

The maximum C-Message Noise for the transmission path at the route miles listed is less than or equal to:

	C-Message Noise*	
Route Miles	Type B1	Type B2
Less than 50	32 dBrnCO	35 dBrnCO
51 to 100	33 dBrnCO	37 dBrnCO
101 to 200	35 dBrnCO	40 dBrnCO
201 to 400	37 dBrnCO	43 dBrnCO
401 to 1000	39 dBrnCO	45 dBrnCO

* For Feature Group D only, Type B2 will be provided. For Feature Group B, Type B1 or B2 will be provided as set forth in Technical Reference TR-NPL-000334. (C)

15. Interface Groups, Transmission Specifications and Channel Interfaces (Cont'd)

15.2 Transmission Specification Switched Access Service

TARIFF LIBRARY
UTILITIES DIVISION

15.2.1 Standard Transmission Specifications

(B) Type B Transmission Specifications

(4) C-Notch Noise

The maximum C-Notched Noise, utilizing a -16 dBmO holding tone is less than or equal to 47 dBrnCO.

(5) Echo Control

Echo Control, identified as Impedance Balance for FGB and Equal Level Echo Path Loss for FGD, and expressed as Echo Return Loss (ERL) and Singing Return Loss (SRL) also differ by Feature Group. They are greater than or equal to the following: (C)

	Echo Return Loss	Singing Return Loss
For FGB access	8 dB	4 dB

(D)

(D)

TARIFF LIBRARY
UTILITIES DIVISION

15. Interface Groups, Transmission Specifications and Channel Interfaces (Cont'd)

15.2 Transmission Specification Switched Access Service

15.2.1 Standard Transmission Specifications (Cont'd)

(B) Type B Transmission Specifications (Cont'd)

(6) Reserved for Future Use

(C) Reserved for Future Use

15.2.2 Data Transmission Parameters

Two types of Data Transmission Parameters, i.e., Type DA and Type DB, are provided for the Feature Group arrangements. The specific applications on terms of the Feature Groups with which they are provided are set forth in 6.2.2(B) and 6.2.4(B) preceding. Following are descriptions of each. (C)

(A) Data Transmission Parameters Type DA

(1) Signal to C-Notched Noise Ratio

The Signal to C-Notched Noise Ratio is equal to or greater than 33 dB.

(2) Envelope Delay Distortion

The maximum Envelope Delay Distortion for the frequency bands and route miles specified is:

15. Interface Groups, Transmission Specifications and Channel Interfaces (Cont'd)

15.2 Transmission Specifications Switched Access Service (Cont'd)

15.2.2 Data Transmission Parameters (Cont'd)

(A) Data Transmission Parameters Type DA (Cont'd)

(2) Envelope Delay Distortion (Cont'd)

	604 to 2804 Hz
less than 50 route miles	500 microseconds
equal to or greater than 50 route miles	900 microseconds

	1004 to 2404 Hz
less than 50 route miles	200 microseconds
equal to or greater than 50 route miles	400 microseconds

(3) Impulse Noise Counts

The Impulse Noise Counts exceeding a 65 dBrnCO threshold in fifteen (15) minutes is no more than fifteen (15) counts.

15. Interface Groups, Transmission Specifications and Channel Interfaces (Cont'd)

15.2 Transmission Specifications Switched Access Service (Cont'd)

15.2.2 Data Transmission Parameters (Cont'd)

(A) Data Transmission Parameters Type DA (Cont'd)

(4) Intermodulation Distortion

The Second Order (R2) and Third Order (R3) Intermodulation Distortion products are equal to or greater than:

Second Order (R2)	33 dB
Third Order (R3)	37 dB

(5) Phase Jitter

The Phase Jitter over the 4-300 Hz frequency band is less than or equal to 5 degrees peak-to-peak.

(6) Frequency Shift

The maximum Frequency Shift does not exceed -2 to +2 Hz.

(B) Data Transmission Parameters Type DB

(1) Signal to C-Notched Noise Ratio

The signal to C-Notched Noise Ratio is equal to or greater than thirty (30) dB.

15. Interface Groups, Transmission Specifications and Channel Interfaces (Cont'd)

15.2 Transmission Specifications Switched Access Service (Cont'd)

15.2.2 Data Transmission Parameters (Cont'd)

(B) Data Transmission Parameters Type DB (Cont'd)

(2) Envelope Delay Distortion

The maximum Envelope Delay Distortion for the frequency bands and route miles specified is:

	604 to 2804 Hz
less than 50 route miles	800 microseconds
equal to or greater than 50 route miles	1000 microseconds

	1004 to 2404 Hz
less than 50 route miles	320 microseconds
equal to or greater than 50 route miles	500 microseconds

(3) Impulse Noise Counts

The Impulse Noise Counts exceeding a 67 dBrnCO threshold in fifteen (15) minutes is no more than fifteen (15) counts.

15. Interface Groups, Transmission Specifications and Channel Interfaces (Cont'd)

15.2 Transmission Specifications Switched Access Service (Cont'd)

15.2.2 Data Transmission Parameters (Cont'd)

(B) Data Transmission Parameters Type DB (Cont'd)

(4) Intermodulation Distortion

The Second Order (R2) and Third Order (R3) Intermodulation Distortion products are equal to or greater than:

Second Order (R2)	31 dB
Third Order (R3)	34 dB

(5) Phase Jitter

The Phase Jitter over the 4-300 Hz frequency band is less than or equal to 7 degrees peak-to-peak.

(6) Frequency Shift

The maximum Frequency Shift does not exceed -2 to +2 Hz.

15.3 Reserved for Future Use

15.4 Reserved for Future Use

Tariff

No. 2

TF- 94-523

IOWA TARIFF NO. 2
INTEREXCHANGE
TELECOMMUNICATIONS SERVICES

TARIFF LIBRARY
UTILITIES DIVISION

TABLE OF CONTENTS

		Page No.	
	CHECK SHEET	1	
	CONCURRING CARRIERS	13	
	CONNECTING CARRIERS	13	
	OTHER PARTICIPATING CARRIERS	13	
	REGISTERED SERVICE MARKS/REGISTERED TRADEMARKS	13	
	EXPLANATION OF SYMBOLS	14	
	GLOSSARY OF ACRONYMS	15	(N)
1.	APPLICATION OF TARIFF	18	
2.	GENERAL REGULATIONS	19	
2.1	Undertaking of INS	19	
2.1.1	Scope	19	
2.1.2	Limitations	19	
2.1.3	Liability	22	
2.1.4	Availability of Service	24	(N)
2.2	Use	25	
2.2.1	Use of Service	25	
2.2.2	Abuse and Fraudulent Use	25	
2.2.3	Unlawful Purposes	26	
2.2.4	Cancellation for Cause	26	
2.2.5	Interference or Impairment	27	

Issued: October 10, 1994 Effective: NOV 13 1994

By: William P. Bagley
General Manager/Chief Executive Officer
4201 Corporate Drive
West Des Moines, Iowa 50266-5906

TF- 94-523

TARIFF LIBRARY
UTILITIES DIVISION

IOWA TARIFF NO. 2
INTEREXCHANCE
TELECOMMUNICATIONS SERVICES

Iowa Network Services, Inc.
Filed With the Board

TABLE OF CONTENTS (Cont'd)

Page No.

2. GENERAL REGULATIONS (Cont'd)

2.3 Definitions 28

Board 28
Calls 28
Charges 28

Customer 28
Customer Premises Equipment 28
Delinquent or Delinquency 29

Disconnect 29
Exchange 29
Exchange Service 29

Exchange Service Area or Exchange Area . . . 29
Extended Area Service 30
Feature Group D 30

Individual Case Basis 30
Interexchange Service 30
Interexchange Utility 31

Local Exchange Utility 31
Local Service 31
Local Service Area 31

Local utility 32
Message 32
Premises 32

Issued: October 10, 1994 Effective: NOV 13 1994

By: William P. Bagley
General Manager/Chief Executive Officer
4201 Corporate Drive
West Des Moines, Iowa 50266-5906

TF- 94-523

TARIFF LIBRARY
UTILITIES DIVISION

IOWA TARIFF NO. 2
INTEREXCHANCE
TELECOMMUNICATIONS SERVICES

Iowa Network Services, Inc.
Filed With the Board

TABLE OF CONTENTS (Cont'd)

Page No.

2. GENERAL REGULATIONS (Cont'd)

2.3 Definitions (Cont'd)

Rates 32
Special Dialing Procedures 33
Suspend 33

Tariff 33
Telephone Utility or Utility 34
Timely Payment 34

Toll Message 34
Toll Rate 34
Traffic 34

2.4 Maintenance of Services 35

2.5 Disconnection of Service 36

2.5.1 Without Prior Notice 36
2.5.2 With Prior Notice 38
2.5.3 Notice 40
2.5.4 Suspended Service 41

Issued: October 10, 1994 Effective: NOV 13 1994

By: William P. Bagley
General Manager/Chief Executive Officer
4201 Corporate Drive
West Des Moines, Iowa 50266-5906

TF- 94-523

IOWA TARIFF NO. 2
INTEREXCHANGE
TELECOMMUNICATIONS SERVICES

TARIFF LIBRARY
UTILITIES DIVISION

TABLE OF CONTENTS (Cont'd)

		Page No.	
2.6	Engineering	42	
2.6.1	Requirement for Good Engineering Practice	42	
2.6.2	Adequacy of Service	42	
2.6.3	Service Interruption	45	
2.7	Safety	48	
2.8	Held Applications	49	
2.9	Customer Information	49	
2.10	Customer Complaints	50	
2.11	Obligations of the Customer	52	
2.11.1	Damages	52	
2.11.2	Ownership of Facilities and Theft	52	
2.11.3	Availability for Testing	53	
2.11.4	Balance	53	
2.11.5	Claims and Demands for Damages	53	
2.12	Payment Arrangements and Credit Allowances	54	
2.12.1	Payment of Rates, Charges and Deposits	54	
2.12.2	Rates for Fractional Periods	59	(N)
2.13	Application for Service	60	
2.14	Chargeable Optional Features	60	
2.14.1	Busy Verification Service	60	

TF 95-502

IOWA STATE LIBRARY
DOCUMENTS DIVISION

IOWA TARIFF NO. 2
INTEREXCHANCE
TELECOMMUNICATIONS SERVICES

Iowa Network Services, Inc. — 2nd Revised Page 7
Filed With the Board — Cancels 1st Revised Page 7

TABLE OF CONTENTS (Cont'd)

	Page No.
3. MESSAGE TELECOMMUNICATIONS SERVICE	64
3.1 Application	64
3.2 Mileage Measurement	64
3.3 Dialing Procedure	64
3.4 Application of Rates and Charges	65
3.4.1 Class of Service	65
3.4.2 Initial Period, Additional Periods, and Discounts	65
3.4.3 Timing of Messages	66
3.4.4 Determination of Time and Day	67
3.4.5 Rates Applicable on Certain Holidays	67
3.4.6 Hearing or Speech Impairment Discount	67
3.4.7 Medical Emergency	69
3.5 Rates and Charges	70
3.5.1 INS Plus Long Distance	70.1 (C)
4. OPERATOR SERVICES	71
4.1 Nature of Service	71
4.2 Dialing Procedure	71
4.3 Application of Rates and Charges	72
4.3.1 Class of Service	72
4.3.2 Reversal of Charges	75
4.3.3 Bill to Third Party	75
4.3.4 Credit Card	76
4.3.5 Rates and Charges	76

Issued: December 21, 1995 Effective: JAN 21 1996

By: William P. Bagley
General Manager/Chief Executive Officer
4201 Corporate Drive
West Des Moines, Iowa 50266-5906

TF- 94-523

IOWA TARIFF NO. 2
INTEREXCHANCE
TELECOMMUNICATIONS SERVICES

TARIFF LIBRARY
UTILITIES DIVISION

Iowa Network Services, Inc.
Filed With the Board

TABLE OF CONTENTS (Cont'd)

		Page No.	
5.	WIDE AREA TELECOMMUNICATIONS SERVICE (WATS) . . .	77	
5.1	Application	77	
5.2	Dialing Procedure	77	
5.3	Application of Rates and Charges	77	
5.3.1	Class of Service	77	
5.3.2	Rounding	77	
5.3.3	Service Ordering Charge	78	
5.3.4	Central Office Line Charge	78	
5.3.5	Move/Changing Charge	79	
5.3.6	Dedicated Access Line Charge	79	
5.3.7	Special Access Surcharge	80	
5.3.8	Cancellation Charge	81	
5.4	Rates and Charges	82	
5.4.1	Monthly Usage Rate	82	(T)
5.4.2	Service Order Charge	82	
5.4.3	Central Office Line Charge	82	
5.4.4	Move/Changing Charge	83	
5.4.5	Dedicated Access Line Charge	83	
5.4.6	Special Access Surcharge	83	
5.4.7	Cancellation Charge	83	

Issued: October 10, 1994 Effective: NOV 13 1994

By: William P. Bagley
General Manager/Chief Executive Officer
4201 Corporate Drive
West Des Moines, Iowa 50266-5906

TF- 95-181

IOWA TARIFF NO. 2
INTEREXCHANGE
TELECOMMUNICATIONS SERVICES

TARIFF LIBRARY
UTILITIES DIVISION

Iowa Network Services, Inc.
Filed With the Board

1st Revised Page 9
Cancels Original Page 9

TABLE OF CONTENTS (Cont'd)

		Page No.	
6.	800 SERVICE	84	
6.1	Application	84	
6.2	Dialing Procedure	84	
6.3	Application of Rates and Charges	84	
6.3.1	Class of Service	84	
6.3.2	Determination of Duration	84.1	(T)
6.3.3	Rounding	85	
6.3.4	Service Ordering Charge	85	
6.3.5	Central Office Line Charge	86	
6.3.6	Move/Changing Charge	86	
6.3.7	Dedicated Access Line Charge	86	
6.3.8	Special Access Surcharge	87	
6.3.9	Cancellation Charge	88	
6.4	Rates and Charges	89	
6.4.1	Monthly Usage Charge	89	
6.4.2	Service Order Charge	89	
6.4.3	Central Office Line Charge	89	
6.4.4	Move/Changing Charge	90	
6.4.5	Dedicated Access Line Charge	90	
6.4.6	Special Access Surcharge	90	
6.4.7	Cancellation Charge	90	
6.5	800 Service - Option A	91	
6.5.1	General	91	
6.5.2	Application of rates and Charges	91	
6.5.3	Rates and Charges	94	

Issued: May 10, 1995 Effective: JUN - 8 1995

By: William P. Bagley
General Manager/Chief Executive Officer
4201 Corporate Drive
West Des Moines, Iowa 50266-5906

TF- 94-523

IOWA TARIFF NO. 2
INTEREXCHANCE
TELECOMMUNICATIONS SERVICES

TARIFF LIBRARY
UTILITIES DIVISION

Iowa Network Services, Inc.
Filed With the Board

TABLE OF CONTENTS (Cont'd)

	Page No.
7. TWO-WAY WATS	95
7.1 Application	95
7.2 Application of Rates and Charges	95
7.2.1 Class of Service	95
7.2.2 Service Ordering Charge	95
7.2.3 Central Office Line Charge	96
7.2.4 Move/Changing Charge	96
7.2.5 Dedicated Access Line Charge	96
7.2.6 Special Access Surcharge	97
7.2.7 Cancellation Charge	98
7.3 Rates and Charges	99
7.3.1 Monthly Usage Charge	99
7.3.2 Service Order Charge	99
7.3.3 Central Office Line Charge	99
7.3.4 Move/Changing Charge	100
7.3.5 Dedicated Access Line Charge	100
7.3.6 Special Access Surcharge	100
7.3.7 Cancellation Charge	100

Issued: October 10, 1994 Effective: NOV 13 1994

By: William P. Bagley
General Manager/Chief Executive Officer
4201 Corporate Drive
West Des Moines, Iowa 50266-5906

TF- 94-523

IOWA TARIFF NO. 2
INTEREXCHANCE
TELECOMMUNICATIONS SERVICES

TARIFF LIBRARY
UTILITIES DIVISION

Iowa Network Services, Inc.
Filed With the Board

TABLE OF CONTENTS (Cont'd)

		Page No.	
8.	DEDICATED ACCESS LINE SERVICE (DALS)	101	(N)
8.1	Application	101	
8.2	Dialing Procedure	101	
8.3	Application of Rates and Charges	101	
8.3.1	Class of Service	101	
8.3.2	Rounding	102	
8.3.3	Service Ordering Charge	102	
8.3.4	Central Office Line Charge	102	
8.3.5	Move/Changing Charge	103	
8.3.6	Special Access Surcharge	103	
8.3.7	Cancellation Charge	104	
8.4	Rates and Charges	105	
8.4.1	Basic Rates	105	
8.4.2	Service Order Charge	105	
8.4.3	Central Office Line Charge	106	
8.4.4	Move/Changing Charge	106	
8.4.5	Special Access Surcharge	107	
8.4.6	Cancellation Charge	107	(N)

Issued: October 10, 1994 Effective: NOV 13 1994

By: William P. Bagley
General Manager/Chief Executive Officer
4201 Corporate Drive
West Des Moines, Iowa 50266-5906

TF- 94-523

TARIFF LIBRARY
UTILITIES DIVISION

IOWA TARIFF NO. 2
INTEREXCHANCE
TELECOMMUNICATIONS SERVICES

Iowa Network Services, Inc.
Filed With the Board

TABLE OF CONTENTS (Cont'd)

		Page No.	
9.	DIRECTORY ASSISTANCE SERVICE	108	(N)
9.1	Nature of Service	108	
9.2	Dialing Procedure	108	
9.3	Application of Rates and Charges	109	
9.3.1	Allowance	109	
9.3.2	Non-Transferable	109	
9.3.3	Exemptions	110	
9.4	Rates	110	
10.	INS PREPAID CARD SERVICE	111	
10.1	Nature of Service	111	
10.2	Availability of Service	111	
10.3	Dialing Procedure	111	
10.4	Other Conditions of Service	112	
10.5	Rates	113	(N)

Issued: October 10, 1994 Effective: NOV 13 1994

By: William P. Bagley
General Manager/Chief Executive Officer
4201 Corporate Drive
West Des Moines, Iowa 50266-5906

TF- 95-146

TARIFF LIBRARY
UTILITIES DIVISION

IOWA TARIFF NO. 2
INTEREXCHANCE
TELECOMMUNICATIONS SERVICES

Iowa Network Services, Inc.
Filed With the Board

TABLE OF CONTENTS (Cont'd)

	Page No.	
11. TRAVEL SERVICE	114	(N)
11.1 Application	114	
11.2 Dialing Procedure	114	
11.3 Mileage Measurement	114	
11.4 Application of Rates and Charges	114	
11.4.1 Initial Period, Additional Periods, and Surcharges	114	
11.4.2 Timing of Messages	115	
11.4.3 Determination of Time and Day	116	
11.4.4 Rates Applicable on Certain Holidays	117	
11.5 Rates and Charges	118	
11.5.1 Usage Charges	118	
11.5.2 Surcharges	119	(N)

Issued: April 20, 1995 Effective: MAY 26 1995

By: William P. Bagley
General Manager/Chief Executive Officer
4201 Corporate Drive
West Des Moines, Iowa 50266-5906

PUBLIC VERSION

TF- 94-523

IOWA TARIFF NO. 2
INTEREXCHANCE
TELECOMMUNICATIONS SERVICES

TARIFF LIBRARY
UTILITIES DIVISION

Iowa Network Services, Inc.
Filed With the Board

Original Title Page

IOWA UTILITIES BOARD

Iowa Network Services, Inc.

Telephone Tariff

Filed With

Iowa State Utilities Board

REGULATIONS, RATES AND CHARGES

APPLYING TO THE PROVISION OF

INTRASTATE INTEREXCHANGE TELECOMMUNICATIONS SERVICES

This is a revision to Iowa Tariff No. 2 which replaces in its entirety all pages prior to the effective date of _____.

Issued: October 10, 1994

Effective: NOV 13 1994

By: William P. Bagley
General Manager/Chief Executive Officer
4201 Corporate Drive
West Des Moines, Iowa 50266-5906

TF-95-502

TARIFF LIBRARY
UTILITIES DIVISION

IOWA TARIFF NO. 2
INTEREXCHANCE
TELECOMMUNICATIONS SERVICES

Iowa Network Services, Inc. 7th Revised Page 1
Filed With the Board Cancels 6th Revised Page 1

CHECK SHEET

The Title Page and Pages 1 to 119 inclusive of the tariff are effective as of the date shown. Original and revised pages as named below contain all changes from the original tariff that are in effect on the date hereof.

Page	Revision Number	Page	Revision Number
Title	Original	19	Original
1	7th Revised*	20	Original
2	5th Revised*	21	Original
2.1	3rd Revised*	22	Original
3	1st Corrected Original	23	Original
4	Original	24	Original
5	Original	25	Original
6	1st Corrected Original	26	2nd Corrected
7	2nd Revised*		1st Revised
8	Original	27	1st Revised
9	1st Revised	28	Original
10	Original	29	Original
11	Original	30	Original
12	Original	31	1st Corrected Original
12.1	Original	32	Original
13	1st Corrected Original	33	Original
14	Original	34	Original
15	1st Corrected Original	35	Original
16	1st Corrected Original	36	Original
17	1st Corrected Original	37	Original
18	Original	38	Original

* New or Revised Page

Issued: December 21, 1995 Effective: JAN 21 1996

By: William P. Bagley
General Manager/Chief Executive Officer
4201 Corporate Drive
West Des Moines, Iowa 50266-5906

TF-95-502

IOWA TARIFF NO. 2
INTEREXCHANCE
TELECOMMUNICATIONS SERVICES

LEGAL DIVISION

Iowa Network Services, Inc. 5th Revised Page 2
Filed With the Board Cancels 4th Revised Page 2

CHECK SHEET (Continued)

Page	Revision Number	Page	Revision Number
39	Original	63	1st Corrected Original
40	Original	64	Original
41	Original	65	1st Revised
42	Original	66	1st Revised
43	Original	67	1st Revised
44	1st Revised*	68	Original
45	Original	69	Original
46	Original	70	3rd Revised*
47	Original	70.1	1st Revised*
48	Original	70.2	Original*
49	Original	70.3	Original*
50	Original	70.4	Original*
51	Original	71	Original
52	Original	72	Original
53	Original	73	Original
54	Original	74	Original
55	Original	75	Original
56	Original	76	Original
57	Original	77	Original
58	Original	78	Original
59	1st Revised	79	Original
60	Original	80	Original
61	Original	81	Original
62	1st Corrected Original	82	Original

* New or Revised Page

Issued: December 21, 1995 Effective: JAN 21 1996

By: William P. Bagley
General Manager/Chief Executive Officer
4201 Corporate Drive
West Des Moines, Iowa 50266-5906

TF-95-502

TARIFF LIBRARY
UTILITIES DIVISION

IOWA TARIFF NO. 2
INTEREXCHANCE
TELECOMMUNICATIONS SERVICES

Iowa Network Services, Inc.
Filed With the Board

3rd Revised Page 2.1
Cancels 2nd Revised Page 2.1

CHECK SHEET (Continued)

Page	Revision Number	Page	Revision Number
83	Original	105	Original
84	2nd Revised	106	Original
84.1	1st Corrected Original	107	Original
85	Original	108	Original
86	Original	109	1st Corrected Original
87	Original	110	Original
88	Original	111	Original
89	Original	112	Original
90	Original	113	Original
91	1st Revised	114	Original
92	1st Revised	115	Original
93	Original	116	Original
93.1	Original	117	Original
94	1st Corrected 1st Revised	118	Original
95	Original	119	Original
96	Original		
97	Original		
98	Original		
99	Original		
100	Original		
101	Original		
102	Original		
103	Original		
104	Original		

* New or Revised Page

Issued: December 21, 1995 Effective: JAN 21 1996

By: William P. Bagley
General Manager/Chief Executive Officer
4201 Corporate Drive
West Des Moines, Iowa 50266-5906

TF- 94-523

TARIFF LIBRARY
UTILITIES DIVISION

CONCURRING CARRIERS

NO CONCURRING CARRIERS

CONNECTING CARRIERS

ALLNET COMMUNICATIONS SERVICES (N)
AT&T
CONSOLIDATED NETWORK INC.
DIAL NET, INC.
LCI INTERNATIONAL
LDDS
MCI
NTS COMMUNICATIONS INC.
U S SPRINT COMMUNICATIONS CORPORATION
U S WEST COMMUNICATIONS (N)

OTHER PARTICIPATING CARRIERS

NO OTHER PARTICIPATING CARRIERS

REGISTERED SERVICE MARKS

NONE

REGISTERED TRADEMARKS

NONE

Issued: October 10, 1994 Effective: NOV 13 1994

By: William P. Bagley
General Manager/Chief Executive Officer
4201 Corporate Drive
West Des Moines, Iowa 50266-5906

TF- 94-523

IOWA TARIFF NO. 2
INTEREXCHANCE
TELECOMMUNICATIONS SERVICES

TARIFF LIBRARY
UTILITIES DIVISION

Iowa Network Services, Inc.
Filed With the Board

EXPLANATION OF SYMBOLS

(C) - Changed Regulation

(D) - Discontinued Rate or Regulation

(I) - Increase in Rate

(N) - New Rate or Regulation

(R) - Reduction in Rate

(T) - Change in Text Only

TF- 94-523

TARIFF LIBRARY
UTILITIES DIVISION

GLOSSARY OF ACRONYMS (N)

ANI	-	Automatic Number Identification
AT&T-C	-	AT&T Communications
Board	-	Iowa State Utilities Board
BD	-	Business Day
BHMC	-	Busy Hour Minutes of Capacity
BOC	-	Bell Operating Company
CCS	-	Common Channel Signaling
CCSA	-	Common Channel Signaling Access
CCSAN	-	Common Channel Signaling Access Network
CO	-	Central Office
COCTX	-	Central Office Centrex
COE	-	Central Office Equipment
Cont'd	-	Continued
CPE	-	Customer Provided Equipment
Ctx	-	Centrex
DA	-	Directory Assistance
DAL	-	Dedicated Access Line
DDD	-	Direct Distance Dialing
DX	-	Duplex
ESS	-	Electronic Switching System
ESSX	-	Electronic Switching System Exchange
EXM	-	Exit Message
FAX	-	Facsimile
F.C.C.	-	Federal Communications Commission
FX	-	Foreign Exchange
HC	-	High Capacity
Hz	-	Hertz (N)

By: William P. Bagley
General Manager/Chief Executive Officer
4201 Corporate Drive
West Des Moines, Iowa 50266-5906

TF- 94-523

TARIFF LIBRARY
UTILITIES DIVISION

GLOSSARY OF ACRONYMS (Cont'd) (N)

IC	-	Interexchange Carrier
ICB	-	Individual Case Basis
IUB	-	Iowa State Utilities Board
KBPS	-	Kilobits per Second
kHz	-	Kilohertz
LATA	-	Local Access and Transport Area
LIDB	-	Line Information Data Base
Mbps	-	Megabits per Second
MEANS	-	Minnesota Equal Access Network Services, Inc.
MHz	-	Megahertz
MMUC	-	Minimum Monthly Usage Charge
MRC	-	Monthly Recurring Charge
MT	-	Metallic
MTS	-	Message Telecommunications Service(s)
NPA	-	Numbering Plan Area
NRC	-	Nonrecurring Charge
NTS	-	Non-Traffic Sensitive
NXX	-	Three-Digit Central Office Code
PBX	-	Private Branch Exchange
POT	-	Point of Termination
PTC	-	Participating Telephone Company
RSM	-	Remote Switching Modules
RSS	-	Remote Switching Systems
SAC	-	Service Access Code
SCP	-	Service Control Point
SNAC	-	Signaling Network Access Connection
SPOI	-	Signaling Point of Interconnection

(N)

TF- 94-523

TARIFF LIBRARY
UTILITIES DIVISION

GLOSSARY OF ACRONYMS (Cont'd) (N)

SS7	-	Signaling System 7
SSN	-	Switched Service Network
SSP	-	Service Switching Point
STP	-	Signal Transfer Point
SWC	-	Serving Wire Center
TDD	-	Telecommunications Device for the Deaf
TES	-	Telephone Exchange Service(s)
TSPS	-	Traffic Service Position System
TTP	-	Toll Transfer Point
TTY	-	Teletypewriter
TV	-	Television
USOC	-	Uniform Service Order Code
VG	-	Voice Grade
V&H	-	Vertical & Horizontal
WATS	-	Wide Area Telecommunications Service(s) (N)

TF- 94-523

TARIFF LIBRARY
UTILITIES DIVISION

IOWA TARIFF NO. 2
INTEREXCHANCE
TELECOMMUNICATIONS SERVICES

Iowa Network Services, Inc.
Filed With the Board

1. APPLICATION OF TARIFF

1.1 This Interexchange Telecommunications Services Tariff applies to service furnished by Iowa Network Services, Inc., hereinafter referred to as INS, or furnished jointly by INS and other carriers, between points within the State of Iowa.

1.2 The regulations, rates and charges which are set forth in the body of this tariff apply to intraLATA Interexchange Telecommunications Services. InterLATA Interexchange Telecommunications Services, which have been deregulated by the Board in Docket INU-88-2, are not offered under this tariff.

TF- 94-523

TARIFF LIBRARY
UTILITIES DIVISION

2. GENERAL REGULATIONS

2.1 Undertaking of INS

2.1.1 Scope

Interexchange Telecommunications Services are furnished within Iowa in accordance with the conditions and regulations which are set forth in the body of this tariff.

2.1.2 Limitations

(A) The customer may not assign or transfer the use of services provided under this tariff; however, where there is no interruption of use or relocation of the services, such assignment or transfer may be made to:

(1) Another customer, whether an individual, partnership, association or corporation, provided the assignee or transferee assumes all outstanding indebtedness and current charges for such services, if any; or a court-appointed receiver, trustee or other person acting pursuant to law in bankruptcy, receivership, reorganization, insolvency, liquidation or other similar proceedings, provided the assignee or transferee assumes the current charges applicable to such services, if any.

TF- 94-523

TARIFF LIBRARY
UTILITIES DIVISION

2. GENERAL REGULATIONS (Cont'd)

2.1 Undertaking of INS (Cont'd)

2.1.2 Limitations (Cont'd)

(A) (1) (Cont'd)

In all cases of assignment or transfer, the written acknowledgment of INS is required prior to such assignment or transfer which acknowledgment shall be made within fifteen (15) days from the receipt of notification. All regulations and conditions contained in this tariff shall apply to such assignee or transferee.

The assignment or transfer of services does not relieve or discharge the assignor or transferor from remaining jointly or severally liable with the assignee or transferee for any obligations existing at the time of the assignment or transfer.

(B) Interconnection with Other Carriers

Service furnished by INS may be connected with services or facilities of another participating carrier or may be provided over facilities solely provided by local utilities and/or interexchange carriers other than INS. Service furnished by INS is not part of a joint undertaking with such other carriers.

TF- 94-523

TARIFF LIBRARY
UTILITIES DIVISION

3. GENERAL REGULATIONS (Cont'd)

2.1 Undertaking of INS (Cont'd)

2.1.2 Limitations (Cont'd)

(C) Force Majeure

INS reserves the right to discontinue furnishing service upon written notice when necessitated by events or circumstances beyond its control or when the customer is using the service in violation of the provisions of this tariff or in violation of the law.

(D) Priority of Services

Subject to compliance with Board or Government rules or regulations, where a shortage of facilities exists at any time either for temporary or protracted periods, the establishment of Interexchange Telecommunications Services shall take precedence over all other intercity services.

(E) Limitations on Duration of Connections

INS reserves the right to limit the length of conversation when necessary in times of emergency resulting in a shortage of facilities.

NOV 13 1994

TF- 94-523

TARIFF LIBRARY
UTILITIES DIVISION

2. GENERAL REGULATIONS (Cont'd)

2.1 Undertaking of INS (Cont'd)

2.1.3 Liability

(A) The liability of INS for damages to any party arising out of mistakes, omissions, interruptions, delays, errors, or defects in transmission occurring in the course of furnishing service or facilities shall in no event exceed an amount equivalent to the proportionate charge by INS for the defective call, for the period of service during which such mistake, omission, interruption, delay, error, or defect in transmission occurs.

(B) The customer indemnifies and saves INS harmless against claims for liable, slander, or infringement of copyright arising from the material transmitted over its facilities; against claims for infringement of patents arising from combining with, or using in connection with, facilities of INS apparatus and systems of the customer; and against all other claims arising out of any act or omission of the customer in connection with facilities provided by INS.

(C) No carrier participating in this service shall be liable for any act or omission of any other carrier also participating in the service.

TF- 94-523

TARIFF LIBRARY
UTILITIES DIVISION

2. GENERAL REGULATIONS (Cont'd)

2.1 Undertaking of INS (Cont'd)

2.1.3 Liability (Cont'd)

(D) INS shall not be liable for damage arising out of mistakes, omissions, interruptions, delays, errors or defects in transmission or other injury, which is caused by customer provided equipment or non-INS services being used in conjunction with INS' service. It shall be the customer's responsibility to ensure that the customer premises equipment is compatible with the service furnished by INS.

(E) INS shall not be liable for damages arising out of the use of the INS Network for the transmission of other than voice grade service.

(F) Now, or at any future time, if a state, county or other local taxing authority possesses or acquires the legal right to impose a sales tax, gross receipts tax, or other similar charge upon INS based upon the services rendered to the customer, and has imposed, or imposes the same by ordinance or otherwise, such taxes, fees or charges shall be billed to the customers receiving service within the territorial limits of such taxing authority. Such billing shall allocate the tax, fee or charge among customers uniformly on the basis of each customer's monthly charges for the types of service made subject to such tax, fee or charge.

TF- 94-523

TARIFF LIBRARY
UTILITIES DIVISION

2. GENERAL REGULATIONS (Cont'd)

2.1 Undertaking of INS (Cont'd)

2.1.3 Liability (Cont'd)

(G) INS does not guarantee or make any warranty with respect to it services when used in an explosive atmosphere. INS shall be indemnified, defended and held harmless by the customer from any and all claims by any person relating to the customer's use of services so provided.

2.1.4 Availability of Service (N)

The provision of all services under this tariff is subject to the availability of facilities and the provisions contained herein. (N)

TF- 94-523

TARIFF LIBRARY
UTILITIES DIVISION

2. GENERAL REGULATIONS (Cont'd)

2.2 Use

2.2.1 Use of Service

This service is provided for use by the customer and may be used by others, when so authorized by the customer, subject to the provisions of this tariff.

2.2.2 Abuse and Fraudulent Use

The service is furnished subject to the condition that there will be no abuse or fraudulent use of the service. Abuse or fraudulent use of service includes:

(A) The use of service or facilities of INS to transmit a message without payment of the charge applicable for service;

(B) The obtaining, or attempting to obtain, or assisting another to obtain or to attempt to obtain, Interexchange Telecommunications Services, by rearranging, tampering with, or making connection with any facilities of INS, or by any trick, scheme, false representation, or false credit device, or by or through any other fraudulent means or device whatsoever, with intent to avoid the payment, in whole or in part, of the regular charge for such service;

(C) The use of service or facilities of INS for a call or calls, anonymous or otherwise, if in a manner which could reasonably be expected to frighten, abuse, torment, or harass another;

TF-95-181

IOWA TARIFF NO. 2
INTEREXCHANCE
TELECOMMUNICATIONS SERVICES

Iowa Network Services, Inc. 2nd Corrected 1st Revised Page 26
Filed With the Board Cancels 1st Corrected 1st Revised Page 26

2. GENERAL REGULATIONS (Cont'd)

2.2 Use (Cont'd)

2.2.2 Abuse and Fraudulent Use (Cont'd)

(D) The use of profane or obscene language;

(E) The use of the service in such a manner as to interfere unreasonably with the use of the service by one or more other customers.

2.2.3 Unlawful Purposes

The service is furnished subject to the condition it will not be used for an unlawful purpose. Service will not be furnished if any law enforcement agency, acting within its jurisdiction, advises that such service is being used or will be used in violation of law. If INS receives other evidence giving reasonable cause to believe that such service is being or will be so used, it will either discontinue or deny the service or refer the matter to the appropriate law enforcement agency.

2.2.4 Cancellation for Cause

For nonpayment of any regulated sum due INS, or for abuse or fraudulent use of the service, INS may either suspend, terminate without suspension, or refuse service without incurring any liability (N)
with notification as required by the Board's rules.
In cases of cancellation of service for cause, INS will withhold the use of a specific 800 number or deny its transfer to another carrier for nonpayment of charges due INS. Such withholding of use or denial of transfer of an 800 number may be taken without written notice being sent to the Customer. (N)

Issued: May 24, 1995 Effective: JUN 8 1995

By: William P. Bagley
General Manager/Chief Executive Officer
4201 Corporate Drive
West Des Moines, Iowa 50266-5906

TF- 95-181

IOWA TARIFF NO. 2
INTEREXCHANGE
TELECOMMUNICATIONS SERVICES

TARIFF LIBRARY
UTILITIES DIVISION

Iowa Network Services, Inc.
Filed With the Board

1st Revised Page 27
Cancels Original Page 27

2. GENERAL REGULATIONS (Cont'd)

2.2 Use (Cont'd)

2.2.4 Cancellation for Cause (cont'd)

Nothing herein or elsewhere in this tariff shall give any Customer, assignee, or transferee any interest or proprietary right in any 800 service telephone number. (N) | (N)

2.2.5 Interference or Impairment

The characteristics and methods of operation of any circuits, facilities or equipment provided by other than INS and associated with the facilities utilized to provide services under this tariff shall not interfere with or impair service over any facilities of INS or its affiliated companies or divisions involved in its services, cause damage to their plant, impair the privacy of any communications carried over their facilities or create hazards to the employees of any of them or the public.

Issued: May 10, 1995 Effective: JUN 8 1995

By: William P. Bagley
General Manager/Chief Executive Officer
4201 Corporate Drive
West Des Moines, Iowa 50266-5906

TF- 94-523

TARIFF LIBRARY
UTILITIES DIVISION

2. GENERAL REGULATIONS (Cont'd)

2.3 Definitions

Board

The term "Board" means the Iowa State Utilities Board.

Calls

The term "Calls" means telephone messages attempted by customers or users.

Charges

The term "Charges" means nonrecurring amounts billed to customers for tariffed services.

Customer

The term "Customer" means any person, firm, association, corporation, agency of the federal, state, or local government, or legal entity, responsible by law for the payment of charges and compliance with the regulations of this tariff.

Customer Premises Equipment

The term "Customer Premises Equipment" means all terminal equipment normally used on the customer's premises owned by the customer or by the telephone utility or some other supplier and leased to the customer.

TF- 94-523

TARIFF LIBRARY
UTILITIES DIVISION

2. GENERAL REGULATIONS (Cont'd)

2.3 Definitions (Cont'd)

Delinquent or Delinquency

The terms "Delinquent" or "Delinquency" means an account for which an uncontested bill or payment agreement for regulated services has not been paid in full on or before the last day for timely payment. The term can also relate to a contested bill once the Board finds the customer's complaint without merit.

Disconnect

The term "Disconnect" means the disabling of circuitry preventing outgoing and/or incoming communications from the INS switch.

Exchange

The term "Exchange" means a unit established by the local exchange utility for the administration of local communication services.

Exchange Service

The term "Exchange Service" means a local communication service furnished by means of local exchange plant and facilities.

Exchange Service Area or Exchange Area

The terms "Exchange Service Area" or "Exchange Area" refer to the general area in which the local telephone utility holds itself out to furnish exchange telephone service.

TF- 94-523

TARIFF LIBRARY
UTILITIES DIVISION

2. GENERAL REGULATIONS (Cont'd)

2.3 Definitions (Cont'd)

Extended Area Service

The term "Extended Area Service" means telephone service, furnished at a flat rate, between customers located within an exchange area and all of the customers of an additional exchange area.

Feature Group D

The term "Feature Group D" means the switched access service provided by a local exchange company as trunk side switching through the use of end office or access tandem switch equipment. Where no access code is required, the number dialed by the customer shall be a seven or ten digit number for calls in the North American Numbering Plan (NANP). Feature Group D is also known as equal access.

Individual Case Basis

The term "Individual Case Basis" means the application of a rate, charge, or condition of the tariff as determined by individual circumstances.

Interexchange Service

The term "Interexchange Service" is the provision of intrastate telecommunications services and facilities between local exchanges and does not include EAS.

TF- 94-523

TARIFF LIBRARY
UTILITIES DIVISION

2. GENERAL REGULATIONS (Cont'd)

2.3 Definitions (Cont'd)

Interexchange Utility

The term "Interexchange Utility" means a utility, a resale carrier or other entity that provides intrastate telecommunications services and facilities between exchanges within Iowa without regard to how such traffic is carried. A local exchange utility that provides interexchange service may also be considered an interexchange utility.

Local Exchange Utility

The term "Local Exchange Utility" means a telephone utility that provides local service under a tariff filed with the Board. The utility may also provide other services and facilities such as access services.

Local Service

The term "Local Service" means telephone service furnished between customers or users located within an exchange area. (T)

Local Service Area

The term "Local Service Area" means the area within which are located the lines to which calls may be made under a specified schedule of exchange rates without payment of toll charges.

TF- 94-523

TARIFF LIBRARY
UTILITIES DIVISION

2. GENERAL REGULATIONS (Cont'd)

2.3 Definitions (Cont'd)

Local Utility

See "Local Exchange Utility".

Message

The term "Message" means a completed telephone call by a customer or user.

Premises

The term "Premises" denotes the space occupied by an individual customer in a building, in adjoining buildings occupied entirely by that customer, or on contiguous property occupied by the customer separated only by a public thoroughfare, a railroad right-of-way, or a natural barrier.

Rates

The term "Rates" shall mean recurring amounts billed to customers for regulated services and equipment.

TF- 94-523

TARIFF LIBRARY
UTILITIES DIVISION

2. GENERAL REGULATIONS (Cont'd)

2.3 Definitions (Cont'd)

Special Dialing Procedures

The term "Special Dialing Procedures" means the dialing procedures which are an exception to the three-step procedure. Special dialing procedures are available where a customer is in an equal access area and has registered specific lines with INS for either "1+" or "10XXX" dialing. In such a case, and only when dialing from such customer's designated telephone lines, the call may be dialed in the following sequence:

10XXX + 1 + area code + long distance telephone number.

Additionally, in the above case and when INS has been designated as the customer's primary interLATA and/or intraLATA carrier, the call may be dialed in the following sequence:

1 + area code + long distance telephone number.

Suspend

The term "Suspend" means temporary disconnection or impairment of service which shall disable either outgoing or incoming communications or both.

Tariff

The term "Tariff" means the entire body of regulated rates, tolls, rentals, charges, classifications, rules, procedures, policies, etc. adopted and filed with the Board by a telephone utility in fulfilling its role of furnishing communications service.

TF- 94-523
TARIFF LIBRARY
UTILITIES DIVISION

2. GENERAL REGULATIONS (Cont'd)

2.3 Definitions (Cont'd)

Telephone Utility or Utility

The terms "Telephone Utility" or "Utility" mean any person, partnership, business association, or corporation, domestic or foreign, owning or operating any facilities for furnishing communications service to the public for compensation.

Timely Payment

The term "Timely Payment" is a payment on a customer's account made on or before the due date shown: (1) on a current bill for rates and charges, or (2) by an agreement between the customer and utility for a series of partial payments to settle a delinquent account.

Toll Message

The term "Toll Message" means a message made between different exchange areas for which a charge is made, excluding message rate service charges.

Toll Rate

The term "Toll Rate" means the tariff charge prescribed for toll messages, usually based upon the duration of the message, the distance between the exchanges, and the day and time of the message.

Traffic

The term "Traffic" means telephone call volume based on the number and duration of calls. (T)

TF- 94-523

TARIFF LIBRARY
UTILITIES DIVISION

2. GENERAL REGULATIONS (Cont'd)

2.4 Maintenance of Services

The services provided under this tariff shall be maintained by INS. The customer or others may not rearrange, move, disconnect, remove or attempt to repair any facilities provided by INS, except with the written consent of INS.

INS shall adopt and pursue a maintenance program aimed at achieving efficient operation of its system so as to promote the rendering of safe, adequate and continuous service at all times. Maintenance shall include keeping all plant and equipment in a good state of repair consistent with safe and adequate service performance. Broken, damaged or deteriorated parts which are no longer serviceable shall be repaired or replaced. Adjustable apparatus and equipment shall be readjusted as necessary when found by preventive routines or fault location tests to be in unsatisfactory operating condition. Electrical faults, such as noise induction, cross talk, or poor transmission characteristics shall be corrected to the extent practical within the design capability of the plant affected.

Maintenance of aerial plant shall include the replacement of broken or badly deteriorated poles, brackets, and broken-down guides. Defective splices shall be replaced and adequate clearance provided.

Switching equipment shall be inspected and routinely tested at regular intervals, and such repairs, adjustments or replacements made as are found to be necessary and as required to ensure the proper functioning of the equipment.

TF- 94-523

TARIFF LIBRARY
UTILITIES DIVISION

2. GENERAL REGULATIONS (Cont'd)

2.4 Maintenance of Services (Cont'd)

Records of various tests and inspections shall be kept on file in the office of INS for a minimum of one (1) year. These records shall show the line or regulated equipment tested or inspected, the reason for the test, the general conditions under which the test was made, the general result of the test and such corrections as were made when the test indicated need for same.

2.5 Disconnection of Service

2.5.1 Without Prior Notice

Interexchange service may be refused or disconnected without prior notice by INS for the following reasons:

(A) In the event of a condition on the customer's premises determined by INS to be hazardous.

(B) In the event of customer's use in such a manner as to adversely affect INS' facilities or INS' service to others.

(C) In the event of tampering with facilities leased or owned by INS.

TF- 94-523

TARIFF LIBRARY
UTILITIES DIVISION

2. GENERAL REGULATIONS (Cont'd)

2.5 Disconnection of Service (Cont'd)

2.5.1 Without Prior Notice (Cont'd)

(D) In the event of interexchange service being used by a customer in connection with a plan or contrivance to secure a large volume of interexchange calls to be directed to such customer or the telephone service of any designated customer at or about the same time, resulting in preventing, obstructing or delaying the interexchange service of others.

(E) In the event of unauthorized use.

Following the disconnection of service for any of these reasons, INS, or the local exchange utility acting as INS' agent, will notify the telephone customer that service was disconnected and why. The notice will include all reasons for the disconnection and will include a toll-free number where a customer can obtain additional information. Notice shall be deemed given upon deposit, postage prepaid, in the U.S. Mail to the customer's last known address.

TF- 94-523

TARIFF LIBRARY
UTILITIES DIVISION

2. GENERAL REGULATIONS (Cont'd)

2.5 Disconnection of Service (Cont'd)

2.5.2 With Prior Notice

Service can be disconnected with prior notice for the following reasons:

(A) In the event the customer is indebted to INS for the same type of telephone service previously furnished.

(B) In the event the customer supplied false or inaccurate information of a material nature in order to obtain telephone service.

(C) For failure of the customer or prospective customer to furnish service equipment, permits, certificates, rights of way necessary to obtain service or for the withdrawal of that same equipment or the termination of those permissions or rights, or for the failure of the customer or prospective customer to fulfill the contractual obligations imposed upon him or her as conditions of obtaining service by a contract filed with and subject to the regulatory authority of the Board.

(D) For failure of the customer to permit INS reasonable access to its facilities on the customer's premises.

TF- 94-523

TARIFF LIBRARY
UTILITIES DIVISION

2. GENERAL REGULATIONS (Cont'd)

2.5 Disconnection of Service (Cont'd)

2.5.2 With Prior Notice (Cont'd)

(E) For nonpayment of a bill, where a reasonable attempt has been made at collection, except bills for merchandise purchased from INS, a different class of service or another customer which had been guaranteed.

(F) For nonpayment of deposit as specified.

(G) In the event the service is or is likely to be used for unlawful purposes.

(H) Any other violation of the conditions governing the furnishing of service.

(I) For violation or noncompliance with INS' tariff rules on file with the Board, the requirements of any municipal ordinance, regulation or law pertaining to the service.

TF- 94-523

TARIFF LIBRARY
UTILITIES DIVISION

2. GENERAL REGULATIONS (Cont'd)

2.5 Disconnection of Service (Cont'd)

2.5.3 Notice

For disconnects under 2.5.2 preceding, written notice of a pending disconnect will be rendered five (5) days prior to the disconnection. The notice will include all reasons for the disconnect and the final date by which payment is to be made or specific action taken. The notice will include a toll-free number where a customer can obtain additional information. A notice of disconnect based upon non-payment will not be issued until the bill becomes delinquent. Notice shall be deemed given upon deposit, postage prepaid, in the U.S. Mail to the customer's last known address.

(A) Unusual Circumstances

Disconnection may take place prior to the expiration of the five (5)-day unpaid bill notice period if the utility determines, from verifiable data, that usage during the five (5)-day notice period is so abnormally high that a risk of irreparable revenue loss is created.

(B) Time Restrictions on Disconnection

Except as provided in 2.5.1 preceding or in unusual credit circumstances or abnormal usage of service, no calls will be disconnected on the day preceding or the day on which INS is closed. Service will not be disconnected on a weekend, holiday or after 2 p.m. unless service can be reconnected the same day.

TF- 94-523

TARIFF LIBRARY
UTILITIES DIVISION

IOWA TARIFF NO. 2
INTEREXCHANCE
TELECOMMUNICATIONS SERVICES

Iowa Network Services, Inc.
Filed With the Board

2. GENERAL REGULATIONS (Cont'd)

2.5 Disconnection of Service (Cont'd)

2.5.4 Suspended Service

INS may suspend service when a customer is delinquent in payment. INS will issue the same five-day notice for suspension of service as is issued for termination of service. If INS and the customer cannot resolve payment of the delinquent bill, service may be terminated without an additional notice, and without service being reestablished.

TF- 94-523

TARIFF LIBRARY
UTILITIES DIVISION

2. GENERAL REGULATIONS (Cont'd)

2.6 Engineering

2.6.1 Requirement for Good Engineering Practice

The facilities of INS shall be constructed, installed, maintained and operated subject to the provisions of the Iowa electrical safety code as defined in IAC [199], Chapter 25 (476, 476A, 478), or the requirements of any municipality having jurisdiction, whichever may be the most stringent, and in accordance with accepted good engineering practice in the communications industry to assure, as far as reasonably possible, continuity of service, uniformity in the quality of service furnished, and the safety of persons and property.

2.6.2 Adequacy of Service

(A) INS shall employ recognized engineering and administrative procedures to determine the adequacy of service being provided to the customer.

(B) Traffic studies shall be made and records maintained to determine that sufficient equipment and an adequate operating force are provided during the busy-season, busy-hour period.

TF- 94-523

TARIFF LIBRARY
UTILITIES DIVISION

2. GENERAL REGULATIONS (Cont'd)

2.6 Engineering (Cont'd)

2.6.2 Adequacy of Service (Cont'd)

(C) INS shall make reasonable provisions to meet emergencies resulting from failures of lighting or power service, sudden and prolonged increases in traffic, or from fire, storm, or acts of God. INS shall inform employees as to procedures to be followed in the event of an emergency in order to prevent or mitigate interruption or impairment of Interexchange Telecommunications Services. A permanent auxiliary power unit will be installed at INS' switch and alarms will be maintained in proper condition to indicate improper functioning of the equipment. So that emergency calls will be given prompt attention, customers may call One Call toll free at 1 800 292-8989 during the twenty-four hours of the day.

(D) INS shall employ adequate procedures for assignment of facilities. The assignment record shall be kept up-to-date and checked periodically to determine if adjustments are necessary to maintain proper balance in all groups.

TF-95-502

IOWA TARIFF NO. 2
INTEREXCHANCE
TELECOMMUNICATIONS SERVICES

TARIFF LIBRARY
UTILITIES DIVISION

2. GENERAL REGULATIONS (Cont'd)

2.6 Engineering (Cont'd)

2.6.2 Adequacy of Service (Cont'd)

(E) INS shall furnish and maintain adequate plant, equipment and facilities to provide satisfactory transmission of communications. Transmission shall be at adequate volume levels and free of excessive distortion. Levels of noise and cross talk shall be such as not to impair communications. For interexchange trunks, INS will provide facilities so that at least ninety-eight percent (98%) of (T) telephone calls offered to the group will not encounter an all-trunks-busy condition. For toll connecting trunks, the figure shall be at least ninety-eight (98%). (T)

The transmission objectives set forth herein are based upon the use of standard telephone stations connected to a forty-eight (48) volt dial central office, and measured at a frequency of one thousand (1,000) hertz. The overall transmission loss on interexchange or interoffice trunks will not be more than ten (10) decibels. Whenever feasible, the overall transmission loss on intertoll trunks and on terminating links will be no more than five (5) decibels measured at multiple frequencies between two hundred (200) and three thousand (3,000) hertz.

TF- 94-523

TARIFF LIBRARY
UTILITIES DIVISION

2. GENERAL REGULATIONS (Cont'd)

2.6 Engineering (Cont'd)

2.6.2 Adequacy of Service (Cont'd)

(E) Cont'd)

Because these trunks may be only one of several connected links on some toll routes, it may be necessary to provide better facilities in order to keep the overall net circuit losses within the five (5) decibel limit so as to provide satisfactory message transmission.

Where joint construction is mutually agreed upon, it shall be subject to the provisions of the Iowa electrical safety code or such other appropriate regulation as may be prescribed.

2.6.3 Service Interruption

(A) INS shall make all reasonable efforts to prevent interruptions of service. When interruptions occur, INS shall reestablish service with the shortest possible delay.

(B) Arrangements shall be made to have personnel available to receive and record trouble reports twenty-four (24) hours daily and also to clear trouble of an emergency nature; at night, on holidays, on weekends, as well as during regular working hours.

2. GENERAL REGULATIONS (Cont'd)

2.6 Engineering (Cont'd)

2.6.3 Service Interruption (Cont'd)

(C) Whenever service must be interrupted during regular working hours for the purpose of working on the lines, cable or equipment, the work shall be done at a time which will cause the least inconvenience to the customers, and any who would be seriously affected by such interruption shall, so far as possible, be notified in advance.

INS shall keep a written record showing all interruptions affecting its Interexchange Telecommunications Services or any major portion thereof for a minimum of six (6) years. This record shall show the date, time, duration, time cleared and extent and cause of the interruption. This record shall be available to the Board or its authorized representatives upon request at any time within the period prescribed for retention of such records.

Whenever a trouble report is received, a record will be made by INS and if repeated within a thirty (30)-day period by the same customer, this case shall be referred to a supervisor for permanent correction.

When a customer's service is reported or is found to be out of order, it shall be restored as promptly as possible.

TF- 94-523

TARIFF LIBRARY
UTILITIES DIVISION

2. GENERAL REGULATIONS (Cont'd)

2.6 Engineering (Cont'd)

2.6.3 Service Interruption (Cont'd)

(D) The sole remedy for service interruptions, even if it is INS' fault, is the service interruption credit. In the event of an interruption to service which is not due to the negligence or willful act of the customer or the customer's premises equipment, a pro-rata adjustment of the monthly charge for the service will be allowed. The out of service condition must have existed for a period of twenty-four hours or more, and INS must have discovered the interruption to exist or the customer must request the adjustment within thirty (30) days. (N)

TF- 94-523

TARIFF LIBRARY
UTILITIES DIVISION

2. GENERAL REGULATIONS (Cont'd)

2.7 Safety

INS shall exercise reasonable care to reduce the hazards to which its employees, its customers or users and the general public may be subjected. INS shall give reasonable assistance to the Board in the investigation of the cause of accidents and in the determination of suitable means of preventing accidents. INS shall maintain a summary of all reportable accidents arising from its operations.

INS shall adopt and execute a safety program, fitted to the size and type of its operations. At a minimum, the safety program will:

(1) Require employees to use suitable tools and equipment in order that they may perform their work in a safe manner.

(2) Instruct employees in safe methods of performing their work.

(3) Instruct employees who, in the course of their work, are subject to the hazard of electrical shock, asphyxiation or drowning, in accepted methods of artificial respiration.

TF- 94-523

TARIFF LIBRARY
UTILITIES DIVISION

2. GENERAL REGULATIONS (Cont'd)

2.8 Held Applications

During such period of time as INS may not be able to supply initial Interexchange Telecommunications Services to prospective customers or upgrade existing customers within thirty (30) days after the date applicant desires service, INS shall keep a record showing the name and address of each applicant for service, the date of application, the date that service is desired, the class and rate of service applied for, together with the reason for the inability to provide new service or a higher grade of service to the applicant.

2.9 Customer Information

(A) INS shall maintain up-to-date maps, plans, or records of its network, together with such information as may be necessary to enable INS to advise prospective customers, and others entitled to the information, as to the facilities available for serving prospective customers in a serving area.

(B) INS shall notify customers affected by a change in rates or schedule classification in accordance with the Board's rules.

(C) INS shall post notices in a conspicuous place in each office of INS where applications for service are received, informing the public that copies of the rate schedules and rules relating to the services of INS, as filed with the Board, are available for inspection.

(D) INS shall furnish such additional information as the customer may reasonably request.

TF- 94-523

TARIFF LIBRARY
UTILITIES DIVISION

2. GENERAL REGULATIONS (Cont'd)

2.9 Customer Information (Cont'd)

(E) Employees responsible for the receiving of customer telephone calls and customer office visits shall be properly qualified and instructed in the screening and prompt handling of complaints to assure prompt reference of the complaint to the person or department capable of effective handling of the matter complained of and to obviate the necessity of the customer's preliminary repetition of the entire complaint to employees lacking in ability and authority to take appropriate action.

2.10 Customer Complaints

(A) Complaints concerning the charges, practices, facilities or service of INS shall be investigated promptly and thoroughly. INS shall keep a record of such complaint showing the name and address of the complainant, the date, and nature of the complaint, its disposition, and all other pertinent facts dealing with the complaint, which will enable INS to review and analyze its procedure and actions. The records maintained by INS under this rule shall be available for inspection by the Board or its staff upon request.

TF- 94-523

TARIFF LIBRARY
UTILITIES DIVISION

2. GENERAL REGULATIONS (Cont'd)

2.10 Customer Complaints (Cont'd)

(B) The customer must notify INS in writing of the nature and basis of any complaint. Should the complaint not be resolved by the payment date, the customer will, notwithstanding the continuing existence of the dispute, pay the billed amount. Within a reasonable period of time following notification, INS will provide written notice to the customer of the status of the complaint. The final step in the complaint hearing and review procedure shall be a filing for Board resolution of the issues.

(1) The General Manager/Chief Executive Officer (T)
of INS is the person authorized to receive,
act upon and respond to communications from
the Board and customers regarding
complaints. The General Manager/Chief (T)
Executive Officer can be contacted by (T)
telephone at (515) 830-0110 or 1-800-469- (C)
4000. Written complaints should be mailed (C)
to INS' address listed on the bottom of
this tariff.

TF- 94-523

TARIFF LIBRARY
UTILITIES DIVISION

2. GENERAL REGULATIONS (Cont'd)

2.11 Obligations of the Customer

2.11.1 Damages

(A) The customer shall be responsible for damages to INS' leased or owned facilities caused by the negligence or willful act of the customer or those using through the customer. The customer or those using through the customer may not alter, physically modify or intrude upon, rearrange, disconnect, remove or attempt to repair, or permit others to alter, physically modify or intrude upon, rearrange, disconnect, remove or attempt to repair any INS facilities except upon written consent of INS.

(B) The customer's obligation to INS is the same whether the facilities involved are INS-owned facilities or are facilities leased by INS from another party. If INS incurs expenses due to the customer's actions which result in damage to or impairment of INS leased facilities, INS will pass through to the customer any and all expense which the owner of the facilities imposes on INS.

2.11.2 Ownership of Facilities and Theft

Facilities utilized by INS to provide service under the provisions of this tariff shall remain the property of INS. Such facilities shall be returned to INS by the customer, whenever requested, within a reasonable period following the request in as good condition as reasonable wear will permit.

TF- 94-523

TARIFF LIBRARY
UTILITIES DIVISION

2. GENERAL REGULATIONS (Cont'd)

2.11 Obligations of the Customer (Cont'd)

2.11.3 Availability for Testing

The services provided under this tariff shall be available to INS at times mutually agreed upon in order to permit INS to make tests and adjustments appropriate for maintaining the services in satisfactory operating condition. Such tests and adjustments shall be completed within a reasonable time. No credit will be allowed for any interruptions involved during such tests and adjustments.

2.11.4 Balance

All signals for transmission over the services provided under this tariff shall be delivered by the customer balanced to ground except for ground start, duplex (DX) and McCulloh-Loop (Alarm System) type signaling and dc telegraph transmission at speeds of 75 baud or less.

2.11.5 Claims and Demands for Damages

The customer shall defend, indemnify and save harmless INS from and against any suits, claims, losses or damages, including punitive damages, attorneys' fees and court costs by the customer or third parties arising out of any act or omission of the customer in the course of using services provided under this tariff.

TF- 94-523

TARIFF LIBRARY
UTILITIES DIVISION

2. GENERAL REGULATIONS (Cont'd)

2.12 Payment Arrangements and Credit Allowances

2.12.1 Payment of Rates, Charges and Deposits

(A) INS will, in order to safeguard its interests, only require a customer which has a proven history of late payments to INS or does not have established credit, except for a customer which is a successor of a customer which has established credit and has no history of late payments to INS, to make a deposit prior to or at any time after the provision of a service to the customer to be held by INS as a guarantee of the payment of rates and charges. Such deposit may not exceed the actual or estimated rates and charges for the service for a two-month period.

The fact that a deposit has been made in no way relieves the customer from complying with INS' regulations as to the prompt payment of bills. At such time as the provision of the service to the customer is terminated, the amount of the deposit will be credited to the customer's account and any credit balance which may remain will be refunded.

At the option of INS, such a deposit may be refunded or credited to the customer's account when the customer has established credit or after the customer has established a one-year prompt payment record at any time prior to the termination of the provision of the service to the customer.

TF- 94-523

TARIFF LIBRARY
UTILITIES DIVISION

2. GENERAL REGULATIONS (Cont'd)

2.12 Payment Arrangements and Credit Allowances

2.12.1 Payment of Rates, Charges and Deposits (Cont'd)

(A) (Cont'd)

In the case of a cash deposit, the customer will receive interest at an interest rate of seven and a half percent (7.5%) per annum, compounded annually, for the period beginning with the date of deposit to the date of refund or to the date that the deposit is applied to the customer's account or to the date the customer's bill becomes permanently delinquent. The date of refund is that date on which the refund or the notice of deposit return is forwarded to the customer's last known address. The date a customer's bill becomes permanently delinquent, relative to an account treated as an uncollectible account, is the most recent date the account became delinquent. (R)

(1) INS shall keep records to show:

i. The name and address of each depositor.

ii. The amount and date of the deposit.

iii. Each transaction concerning the deposit.

TF- 94-523

TARIFF LIBRARY
UTILITIES DIVISION

2. GENERAL REGULATIONS (Cont'd)

2.12 Payment Arrangements and Credit Allowances

2.12.1 Payment of Rates, Charges and Deposits

(A) (Cont'd)

(2) INS, or a local exchange utility acting as INS' agent, shall issue a receipt of deposit to each customer from whom a deposit is received, and shall provide means whereby a depositor may establish his claim if his receipt is lost.

(3) The deposit shall be refunded after not more than twelve (12) consecutive months of prompt payment (which may be eleven (11) timely payments and one (1) automatic forgiveness of late payment). The account shall be reviewed after twelve (12) months of service and, if the deposit is retained, it shall again be reviewed at the end of INS' accounting year or on the anniversary date of the account.

TF- 94-523

TARIFF LIBRARY
UTILITIES DIVISION

2. GENERAL REGULATIONS (Cont'd)

2.12 Payment Arrangements and Credit Allowances

2.12.1 Payment of Rates, Charges and Deposits

(A) (Cont'd)

(4) INS shall make a reasonable effort to return each unclaimed deposit and accrued interest after the termination of the services for which the deposit was made.

INS shall maintain a record of deposit information for at least two (2) years or until such time as the deposit, together with accrued interest, escheats to the state pursuant to Iowa Code Section 556.4, at which time the record and deposit, together with accrued interest less any lawful deductions, shall be sent to the State Treasurer pursuant to Iowa Code Section 556.11.

(5) Unclaimed deposits, together with accrued interest, shall be credited to an appropriate account.

TF- 94-523

IOWA TARIFF NO. 2
INTEREXCHANCE
TELECOMMUNICATIONS SERVICES

Iowa Network Services, Inc.
Filed With the Board

2. GENERAL REGULATIONS (Cont'd)

2.12 Payment Arrangements and Credit Allowances (Cont'd)

2.12.1 Payment of Rates, Charges and Deposits (Cont'd)

(A) (Cont'd)

(6) A new or additional deposit may be required when a deposit has been refunded or is found to be inadequate by virtue of increased service usage or non-payment. Written notice shall be mailed advising the customer of any new additional deposit requirement. The customer shall have no less than twelve (12) days from the date of mailing to comply. The new or additional deposit shall be payable at any of INS' business offices or local authorized agents. An appropriate receipt shall be provided.

(7) No written notice is required to be given of a deposit required as a prerequisite for commencing initial service. If usage is abnormal, INS may require a new deposit or an increase in deposit to guarantee payment of bills. A customer who fails to comply with the deposit requirements may be disconnected. Should a deposit be credited to the customer's account, as indicated above, no interest will accrue on the deposit from the date such deposit is credited to the customer's account. (T)

Issued: October 10, 1994 Effective: NOV 13 1994

By: William P. Bagley
General Manager/Chief Executive Officer
4201 Corporate Drive
West Des Moines, Iowa 50266-5906

TF- 95-146

TARIFF LIBRARY
UTILITIES DIVISION

2. GENERAL REGULATIONS (Cont'd)

2.12 Payment Arrangements and Credit Allowances (Cont'd)

2.12.1 Payment of Rates, Charges and Deposits (Cont'd)

(B) Rules on billing periods, bill format, bill issuance, timely payment, late payment charge, payment and collection efforts, and the resolution of billing disputes shall be established by the local exchange utilities billing and collecting INS' rates and charges for Interexchange Telecommunications Services.

2.12.2 Rates for Fractional Periods

(A) For the purpose of administering this regulation with respect to determining rates for a fractional part of a month, every month is considered to have thirty days.

(B) The rate for a fractional month will be the proportionate part of the monthly recurring rate based on the actual number of days the service is provided over the 30 day period.

2.12.3 Returned Check Fee (N)

A charge of $20.00 will apply whenever a check or draft presented for payment of service is not accepted by the institution on which it was written. (N)

TF- 94-523

TARIFF LIBRARY
UTILITIES DIVISION

2. GENERAL REGULATIONS (Cont'd)

2.13 Application for Service

Interexchange Message Telecommunications Service must be ordered from the local exchange utility providing local service to the customer. Rules on ordering information and customer cancellation of service shall be established by the local exchange utility providing local service to the customer. (T)

2.14 Chargeable Optional Features

Where facilities permit, INS will, at the option of the customer, provide the following chargeable optional feature.

2.14.1 Busy Verification Service

Busy Verification Service is furnished to customers upon request to provide Line Status or Busy Interrupt for a line or trunk. This service is provided where facilities exist for Line Status or Busy Interrupt through an operator. The provision of Line Status involves an operator determining the condition of a line or trunk that a customer requests to be checked. The status of this line or trunk is verified to the customer for a charge as listed below. The provision of Busy Interrupt involves an operator interrupting a line or trunk that a customers requests to be checked. Information concerning the Busy Interrupt to this line or trunk is passed to the customer for a charge as listed below. No request will be processed on a collect or reversal of charge basis.

TF- 94-523

TARIFF LIBRARY
UTILITIES DIVISION

2. GENERAL REGULATIONS (Cont'd)

2.14 Chargeable Optional Features (Cont'd)

2.14.1 Busy Verification Service (Cont'd)

No charge will apply if the line situation indicates a trouble condition. No charge applies when the request is identified as an emergency request by the customer and originates from or to emergency agencies, such as police, fire, rescue, or ambulance.

The charges listed below are in addition to the rates and charges listed in Sections 3 through 9 following. (C)

(A) Line Status

Provides operator assistance in determining if there is conversation in progress on a called station. The service charge only applies if conversation is detected.

	Service Charge
- per verification	$0.45

TF- 94-523

TARIFF LIBRARY
UTILITIES DIVISION

2. GENERAL REGULATIONS (Cont'd)

2.14 Chargeable Optional Features (Cont'd)

2.14.1 Busy Verification Service (Cont'd)

(B) Busy Interrupt

Provides for operator interruption of a conversation in progress on a called station. A charge applies for each attempt to interrupt regardless of whether or not the called station releases the call. A Line Status must be made, and its Service Charge incurred, prior to a Busy Interrupt.

	Service Charge
- per verification	$0.75

By: William P. Bagley
General Manager/Chief Executive Officer
4201 Corporate Drive
West Des Moines, Iowa 50266-5906

TF- 94-523

TARIFF LIBRARY
UTILITIES DIVISION

IOWA TARIFF NO. 2
INTEREXCHANCE
TELECOMMUNICATIONS SERVICES

Iowa Network Services, Inc. 1st Corrected Original Page 63
Filed With the Board

This page intentionally left blank.

Issued: October 10, 1994 Effective: NOV 13 1994

By: William P. Bagley
General Manager/Chief Executive Officer
4201 Corporate Drive
West Des Moines, Iowa 50266-5906

TF- 94-523
TARIFF LIBRARY
UTILITIES DIVISION

3. MESSAGE TELECOMMUNICATIONS SERVICE

3.1 Application

Service between two points within the State of Iowa handled exclusively by INS or jointly by INS and other carriers is furnished as set forth in 3.2 through 3.5 following. (C)

3.2 Mileage Measurement

Rates are based on the airline distance between the rate center for the calling point and the rate center for the called point, based on V & H coordinates. In general, each city, town, or locality is designated as a rate center and those localities not so designated are assigned a nearby rate center.

3.3 Dialing Procedure

When a customer presubscribes to Message Telecommunications Service provided by INS in local exchange areas where central office facilities provide Feature Group D equal access and INS subscribes to equal access and INS has been selected as the customer's primary interLATA and/or intraLATA toll carrier, calls are originated by dialing 1 + area code + long distance telephone number. In local exchange areas where central office facilities are able to provide Feature Group D equal access and when INS has not been selected as the primary interLATA and/or intraLATA toll carrier, the customer can access Message Telecommunications Service by dialing 10XXX + 1 + area code + long distance telephone number, where XXX equals (T)
INS' Carrier Identification Code of 225. (T)

NOV 13 1994

TF- 95-128

TARIFF LIBRARY
UTILITIES DIVISION

3. MESSAGE TELECOMMUNICATIONS SERVICE (Cont'd)

3.4 Application of Rates and Charges

3.4.1 Class of Service

Message Telecommunications Service is an interexchange telephone service which allows customers to originate calls and terminate calls in any interLATA or intraLATA location within the State of Iowa. Usage charges are based on the distance between the exchanges, the duration of the message and the day and time of the message.

3.4.2 Initial Period, Additional Periods, and Discounts

(A) Except as set forth in Section 3.5.1 for INS Plus Long Distance, initial period rates set forth in the rate table in 3.5 following are for a connection of one minute or any fraction thereof. (C)

(B) Except as set forth in Section 3.5.1 for INS Plus Long Distance, subsequent usage beyond the initial minute will be rounded to the next full minute. (C)

(C) Except as set forth in Section 3.5.1 for INS Plus Long Distance, the charge calculated for the initial minute plus additional minutes will determine the charge for the call. The total amount of the call is rounded up to the nearest whole cent. (C)

TF- 95-146

IOWA TARIFF NO. 2
INTEREXCHANCE
TELECOMMUNICATIONS SERVICES

TARIFF LIBRARY
UTILITIES DIVISION

Iowa Network Services, Inc.
Filed With the Board

1st Revised Page 66
Cancels Original Page 66

3. MESSAGE TELECOMMUNICATIONS SERVICE (Cont'd)

3.4 Application of Rates and Charges (Cont'd)

3.4.3 Timing of Messages

(A) Chargeable time is determined as follows.

(1) The date, day and time (standard or daylight savings) at the rate center of the calling party when the connection is established determines the initial period charge.

(2) The charge for the initial period is the initial period billing rate applicable for the rate period in which the message connect time occurs. The charges for each additional period of usage is the additional billing rate for the rate period in which the beginning of each additional period of usage occurs. The billing rates are shown in 3.5.

(B) Chargeable time begins when connection is established between the calling station and the called party. (C) (D) (D)

(C) Chargeable time ends when the connection is terminated.

Issued: April 20, 1995 Effective: MAY 26 1995

By: William P. Bagley
General Manager/Chief Executive Officer
4201 Corporate Drive
West Des Moines, Iowa 50266-5906

TF- 95-146

IOWA TARIFF NO. 2
INTEREXCHANGE
TELECOMMUNICATIONS SERVICES

TARIFF LIBRARY
UTILITIES DIVISION

Iowa Network Services, Inc.
Filed With the Board

1st Revised Page 67
Cancels Original Page 67

3. MESSAGE TELECOMMUNICATIONS SERVICE (Cont'd)

3.4 Application of Rates and Charges (Cont'd)

3.4.4 Determination of Time and Day

(A) Day Rate. These rates are applicable from 8:00 a.m. to, but not including, 5:00 p.m. Monday through Friday with the exception of holidays. (C)

(B) Evening Rates. These rates are applicable from 5:00 p.m. to, but not including, 11:00 p.m. Sunday through Friday. (C)

(C) Night/Weekend Rates. These rates are applicable from 11:00 p.m. to, but not including, 8.00 a.m. Sunday through Friday, all day Saturday and on Sunday from 8:00 a.m. to, but not including, 5:00 p.m. (C) (C)

3.4.5 Rates Applicable on Certain Holidays

On Christmas Day, New Year's Day, Independence Day, Thanksgiving Day and Labor Day, the holiday rate applicable is the evening rate unless a lower rate would normally apply.

3.4.6 Hearing or Speech Impairment Discount

Disabled persons who have been certified to INS as having a hearing or speech impairment which necessitates that they communicate by a Telecommunications Device for the Deaf (TDD) - sometimes referred to as a teletypewriter or TTY device - will receive, upon written application to INS, credit on day, evening and night rated intrastate intraLATA dial station-to-station calls from certified residence account premises where a TDD is located.

Issued: April 20, 1995 Effective: MAY 26 1995

By: William P. Bagley
General Manager/Chief Executive Officer
4201 Corporate Drive
West Des Moines, Iowa 50266-5906

TF- 94-523

TARIFF LIBRARY
UTILITIES DIVISION

3. MESSAGE TELECOMMUNICATIONS SERVICE (Cont'd)

3.4 Application of Rates and Charges (Cont'd)

3.4.6 Hearing or Speech Impairment Discount (Cont'd)

The credit given for these dial station-to-station calls will be a 20% discount of the full day rates for 8 a.m. to, but not including, 5 p.m. weekdays, a 25% discount of the full day rate for 5 p.m. to, but not including, 11 p.m. weekdays and 8 a.m. to, but not including, 11 p.m. weekends and a 30% discount of full day rates for 11 p.m. to, but not including, 8 a.m. all days. For certain holidays as specified in 3.4.5, the 25% discount will apply unless a lower rate as specified earlier in this paragraph would apply.

For a customer with more than one line or trunk, written application will be required for each line or trunk.

The customer shall provide INS with the original of the written application for certification and also send a copy to the local exchange utility providing local service to the customer.

The billing period for this discount will be determined by the toll billing date. The customer will receive the discount at the beginning of the next toll billing period after application approval. The customer has the option of withdrawing at either the beginning or ending of the billing period.

TF- 94-523

TARIFF LIBRARY
UTILITIES DIVISION

3. MESSAGE TELECOMMUNICATIONS SERVICE (Cont'd)

3.4 Application of Rates and Charges (Cont'd)

3.4.7 Medical Emergency

INS shall postpone the disconnection of interexchange service to a residential customer (defined as a customer located in a residence, residential apartment, including a residential apartment in a hotel, and any other premises of strictly a residential nature as long as business listings are not provided, and where the predominate use of the service is social and domestic in nature rather than commercial, professional, occupational or administrative) for a reasonable time, not in excess of thirty (30) days, if the customer produces verification from a physician or a public health or social service official, which states that interexchange service is essential due to an existing medical emergency of the customer, a member of the customer's family who resides at the premises of the customer, or any permanent resident of the premises where service is rendered. This written verification shall identify the medical emergency and specify the circumstances. Initial verification may be made by telephone if written verification is forwarded to INS within five (5) days.

TF-95-502

TARIFF LIBRARY
UTILITIES DIVISION

IOWA TARIFF NO. 2
INTEREXCHANCE
TELECOMMUNICATIONS SERVICES

Iowa Network Services, Inc.
Filed With the Board

3rd Revised Page 70
Cancels 2nd Revised Page 70

3. MESSAGE TELECOMMUNICATIONS SERVICE (Cont'd)

3.5 Rates and Charges

	Mileage Bands	Initial Minute	Additional Minutes
Day	0 - 10	$0.2400	$0.2400
	11 - 22	0.2700	0.2700
	23 - 55	0.2800	0.2800
	56 - 350	0.3000	0.3000
Evening	0 - 10	0.2080	0.2080
	11 - 22	0.2180	0.2180
	23 - 55	0.2380	0.2380
	56 - 350	0.2580	0.2580
Night/Wknd	0 - 10	0.1980	0.1980
	11 - 22	0.2080	0.2080
	23 - 55	0.2180	0.2180
	56 - 350	0.2300	0.2300

Certain regulations formerly on this page can now be found on 1st Revised Page 70.1.

Issued: December 21, 1995 Effective: JAN 21 1996

By: William P. Bagley
General Manager/Chief Executive Officer
4201 Corporate Drive
West Des Moines, Iowa 50266-5906

3. MESSAGE TELECOMMUNICATIONS SERVICE (Cont'd)

3.5 Rates and Charges (Cont'd)

3.5.1 INS Plus Long Distance

The rates for INS Plus Long Distance apply to a minimum initial usage period of 18 seconds. Initial usage that is less than 18 seconds will be rounded up to 18 seconds. Subsequent usage beyond the initial 18 seconds will be rounded up to the next full six second increment. The (T)
charge calculated for the initial 18 second (T)
usage period plus additional usage in increments (T)
of six seconds will determine the charge for the (T)
call.

The following intraLATA rates are available to customers that select INS as both the customer's primary interLATA toll carrier and primary intraLATA toll carrier for calls originated by dialing 1+ (area code) + the seven digit telephone number:

3.5.1.A (T)

	Day	Evening and Night/Wknd.	
Rate, per minute	$0.22	$0.17	(T)

(D)

Certain regulations on this page formerly appeared on 2nd Revised Page 70.

Issued: December 21, 1995 Effective: JAN 21 1996

By: William P. Bagley
General Manager/Chief Executive Officer
4201 Corporate Drive
West Des Moines, Iowa 50266-5906

TF-95-502

TARIFF LIBRARY
UTILITIES DIVISION

3. MESSAGE TELECOMMUNICATIONS SERVICE (Cont'd)

3.5 Rates and Charges (Cont'd)

3.5.1 INS Plus Long Distance (Cont'd)

3.5.1.B Volume Discounts (N)

Volume discount options are available to customers whose usage exceeds specific minimum levels during the billing period. The subscriber must specify, prior to the start of the billing period, his or her intent to be billed at the volume discount rate. If the usage during that billing period does not meet the minimum requirement, the rates for that billing period will be those specified in 3.5.1.A preceding.

3.5.1.B.1

The following option is available to customers whose total billing for INS Plus Long Distance Service exceeds 10,000 billed messages for the billing period:

	Day	Evening and Night/Wknd.
First 18 Seconds	$0.095	$0.095
Subsequent usage per call, per minute	0.170	0.150 (N)

TARIFF LIBRARY
UTILITIES DIVISION

3. MESSAGE TELECOMMUNICATIONS SERVICE (Cont'd)

3.5 Rates and Charges (Cont'd)

3.5.1 INS Plus Long Distance (Cont'd)

3.5.1.B Volume Discounts (Cont'd) (N)

3.5.1.B.2 Option 1

Option 1 is available to customers whose total billing for INS Plus Long Distance Service exceeds 200,000 billed messages:

	Day	Evening and Night/Wknd.	
First 18 Seconds	$0.095	$0.095	
Subsequent usage per call, per minute	0.160	0.140	(N)

By: William P. Bagley
General Manager/Chief Executive Officer
4201 Corporate Drive
West Des Moines, Iowa 50266-5906

Iowa Network Services, Inc. Original Page 70.4
Filed With the Board

3. MESSAGE TELECOMMUNICATIONS SERVICE (Cont'd)

3.5 Rates and Charges (Cont'd)

3.5.1 INS Plus Long Distance (Cont'd)

3.5.1.B Volume Discounts (Cont'd) (N)

3.5.1.B.2 Option 2

Option 2 is available to customers in exchanges where special arrangements have been made with the local exchange telephone company to bill customers whose usage for INS Plus Long Distance Service exceeds 200,000 billed messages:

	Day	Evening and Night/Wknd.	
First 18 Seconds	$0.045	$0.045	
Subsequent usage per call, each additional six seconds	0.015	0.015	(N)

Issued: December 21, 1995 Effective: JAN 21 1996

By: William P. Bagley
General Manager/Chief Executive Officer
4201 Corporate Drive
West Des Moines, Iowa 50266-5906

TF- 94-523

TARIFF LIBRARY
UTILITIES DIVISION

4. OPERATOR SERVICES

4.1 Nature of Service

Operator Services is a telephone service which allows customers to originate calls by placing calls to an operator who completes the call, or by using a valid credit card number.

4.2 Dialing Procedure

Operator Services may be accessed by any customer who dials one of the following sequences.

0 + (NPA) + NXX-XXXX

00 + (NPA) + NXX-XXXX

0 + (NPA) + NXX-XXXX + credit card number

00 + (NPA) + NXX-XXXX + credit card number

00

TF- 94-523

TARIFF LIBRARY
UTILITIES DIVISION

4. OPERATOR SERVICES (Cont'd)

4.3 Application of Rates and Charges

4.3.1 Class of Service

Three classes of Operator Services are offered:

(A) Operator Station-to-Station.

Operator Station-to-Station calls allow for completion of operator assisted service to the desired telephone number when the calling party does not specify a particular person to be reached, nor a particular station, department or office to be reached through a communications system attendant. An exception to this service category is outlined in 4.3.1(B) below.

TF- 94-523
TARIFF LIBRARY
UTILITIES DIVISION

4. OPERATOR SERVICES (Cont'd)

4.1 Application of Rates and Charges (Cont'd)

4.3.1 Class of Service (Cont'd)

(B) Credit Card Station-to-Station.

Credit Card Station-to-Station calls allow for completion of non-operator assisted calls when one of the following dialing sequences is utilized:

0 + NPA + NXX-XXXX + Credit Card Number

00 + NPA + NXX-XXXX + Credit Card Number

Calling party inserts a credit card into a card reader (where equipment is available) dials the digit zero, or double zero, plus NPA-NXX-XXXX.

In addition, a call is considered as Credit Card Station-to-Station when the calling party dials:

0 + NPA + NXX-XXXX or

00 + NPA + XXX-XXXX, and the credit card number is given to the operator if INS does not have automatic recording equipment to record the credit card number, and the call is not classified as Person-to-Person as described in 4.3.1(C) below.

TF- 94-523

TARIFF LIBRARY
UTILITIES DIVISION

4. OPERATOR SERVICES (Cont'd)

4.3 Application of Rates and Charges (Cont'd)

4.3.1 Class of Service (Cont'd)

(C) Person-to-Person Service.

Person-to-Person Service allows the person originating the call to specify to an operator a particular person to be reached, or a particular station, department, or office to be reached through a communications system attendant. When, after the telephone communications system has been connected and while the connection remains established, the person originating the call requests or agrees to talk to any person other than the person specified, or to any other person, station, department, or office to be reached through a communications system attendant, the classification of the call remains Person-to-Person.

When the person originating the call wishes the operator to make arrangements in advance with a particular party or station for the establishment of a connection at a specific time (appointment call), the call is classified as Person-to-Person.

TF- 94-523

TARIFF LIBRARY
UTILITIES DIVISION

4. OPERATOR SERVICES (Cont'd)

4.3 Application of Rates and Charges (Cont'd)

4.3.2 Reversal of Charges

Charges for Person-to-Person and Operator Station-to-Station calls may be billed against or collected from the called station (i.e., charges may be reversed), if the charges are accepted at the called station. This collect call may be billed to a calling card or third party number. In the case of a public or semipublic coin telephone, the charges must be billed to a credit card or third party number, or the call may be re-originated from the called station. The regularly established rates apply except that:

When the called station does not accept the charges and the calling party requests the operator to place the call later, on a collect basis, the classification of the call is changed to Person-to-Person and the rates and regulations applicable to Person-to-Person apply.

4.3.3 Bill to Third Party

Bill to Third Party denotes a billing arrangement by which a call may be charged to an authorized station as determined by INS other than the station originating the call or the station where the call is terminated. Bill to Third Party calls may be Person-to-Person or Operator Station-to-station as designated by the calling party.

TF- 94-523

TARIFF LIBRARY
UTILITIES DIVISION

4. OPERATOR SERVICES (Cont'd)

4.3 Application of Rates and Charges (Cont'd)

4.3.4 Credit Card

The term "credit card" denotes a credit/charge card for use in billing operator services calls. Credit cards denote any acceptable financial card which INS deems appropriate. Examples are:

(A) INS credit card

(B) Visa/MasterCard

(C) American Express card

(D) Diner's card

(E) Any BOC credit card

4.3.5 Rates and Charges

Operator assisted charges, each completed call:

-	Credit Card Station-to-Station	$ .65	(T)
-	Credit Card Station-to-Station placed to Directory Assistance	1.15	(N) (N)
-	Operator Station-to-Station	1.40	(T)
-	Operator Station-to-Station placed to Directory Assistance	1.90	(N) (N)
-	Person-to-Person	3.50	(T)

TF- 94-523

TARIFF LIBRARY
UTILITIES DIVISION

5. WIDE AREA TELECOMMUNICATIONS SERVICE (WATS)

5.1 Application

Service between two points within the State of Iowa handled exclusively by INS or jointly by INS and other carriers is furnished as set forth in 5.2 through 5.4 following.

5.2 Dialing Procedure

The dialing procedure for WATS is:

1 + Area Code + long distance telephone number

5.3 Application of Rates and Charges

5.3.1 Class of Service

WATS is the furnishing of dial type telecommunications between a WATS access line, provided by a Local Exchange Carrier (LEC), and another location within the State of Iowa in accordance with the regulations and schedules of charges specified in this tariff.

5.3.2 Rounding

(A) Each WATS call is rounded up to the nearest one-tenth of a minute.

(B) The monthly volume of calls for each line is rounded up to the nearest minute.

(D)
|
(D)

TF- 94-523

TARIFF LIBRARY
UTILITIES DIVISION

5. WIDE AREA TELECOMMUNICATIONS SERVICE (WATS) (Cont'd)

5.3 Application of Rates and Charges (Cont'd)

5.3.3 Service Ordering Charge

The Service Ordering Charge covers receiving, recording, transmitting, processing, and acting upon information relating to an order for an installation, connection, move, conversion, signal power adjustment, or change. One Service Order Charge applies for each customer-requested order for all work applicable to INS WATS Service ordered at the same time to be performed on the same date at the same customer premises. Separate Service Ordering Charges apply to unrelated orders for INS WATS Service.

5.3.4 Central Office Line Charge

The Central Office Line Charge covers work associated with establishing or changing a WATS access line. It may include, but is not limited to, installing or changing central office connections; connecting, moving or changing the drop block or buried wire; and work at the customer's premises, the serving office or intermediate locations.

TF- 94-523

TARIFF LIBRARY
UTILITIES DIVISION

5. WIDE AREA TELECOMMUNICATIONS SERVICE (WATS) (Cont'd)

5.3 Application of Rates and Charges (Cont'd)

5.3.5 Move/Changing Charge

The Move/Changing Charge applies when there is a physical change in the location of a WATS access line at the request of the customer to a new location in the same building. A move normally involves an interruption of WATS Service for the period required to complete the move. No credit allowance for interruption will be granted for that period. The Move/Changing Charge also applies to work associated with changing existing access line numbers or hunting arrangements.

5.3.6 Dedicated Access Line Charge

INS WATS Service may require the customer to utilize WATS access lines or Dedicated Access Lines (DALs). The Dedicated Access Line Charge will apply if INS arranges with the relevant local exchange carrier for the installation of the customer's DAL.

TF 94-523

TARIFF LIBRARY
UTILITIES DIVISION

5. WIDE AREA TELECOMMUNICATIONS SERVICE (WATS) (Cont'd)

5.3 Application of Rates and Charges (Cont'd)

5.3.7 Special Access Surcharge

This monthly recurring charge applies, in lieu of the carrier common line charge, for each termination of an access line associated with INS WATS Service at a customer's premises in a PBX or equivalent device capable of interconnecting the access line with the local exchange network. INS will bill the customer the Special Access Surcharge unless the termination is exempt as set forth in (A) following.

(A) Exceptions to the Surcharge Application

If the customer attests in writing that its facility cannot interconnect and is not interconnected with the exchange in question, the customer will not be subject to the charge for that exchange.

TF- 94-523

TARIFF LIBRARY
UTILITIES DIVISION

5. WIDE AREA TELECOMMUNICATIONS SERVICE (WATS) (Cont'd)

5.3 Application of Rates and Charges (Cont'd)

5.3.8 Cancellation Charge

When a customer cancels an order for service before the service is activated, a charge applies to allow INS to recover its unrecovered costs including, but not limited to, engineering, labor, materials and equipment. Charges apply as follows:

Cancellation occurs when a customer initiates a request to discontinue the processing of a service order either in part or in its entirety, prior to its completion. Cancellation charges will be assessed for each circuit end or dedicated access line cancelled from an order prior to its completion by INS, under the following circumstances:

(1) If the local telephone company has confirmed to INS that the circuit end or dedicated access line will be installed; or,

(2) If INS has already submitted facilities orders within its company or to an interconnecting company.

TF- 94-523

TARIFF LIBRARY
UTILITIES DIVISION

5. WIDE AREA TELECOMMUNICATIONS SERVICE (WATS) (Cont'd)

5.4 Rates and Charges

The rates and charges for WATS are as follows:

5.4.1 Monthly Usage Rate

Usage (per hour)	Rate
1	$12.56

5.4.2 Service Order Charge

The Service Order Charge applies per INS WATS Service ordered.

For connecting new or additional WATS access lines

- 2-Wire	$100.00
- 4-Wire	100.00

5.4.3 Central Office Line Charge

Per WATS access line worked on, including but not limited to the following:

(A) WATS access lines	
- 2-Wire	$185.00
- 4-Wire	195.00
(B) Number changes and hunting arrangement changes.	35.00

TF- 94-523

TARIFF LIBRARY
UTILITIES DIVISION

5. WIDE AREA TELECOMMUNICATION SERVICE (WATS) (Cont'd)

5.4 Rates and Charges (Cont'd)

	Monthly	Non Recurring
5.4.4 Move/Changing Charge		
For moving (same premises) or changing existing access line numbers or hunting arrangements.		
- Per order		$ 50.00
5.4.5 Dedicated Access Line Charge		
- Per line	$ 90.00	160.00
5.4.6 Special Access Surcharge		
This charge is in addition to the access line charges.		
- Per termination of an access line	36.25	
5.4.7 Cancellation Charge		
- Per line/channel		130.00

5.4.8 Directory Assistance (N)

Directory Assistance Service offered by INS allows customers to request information from Directory Assistance records. Call and credit allowances are as specified in Section 9.3.1.

Rate - per call $0.50 (N)

By: William P. Bagley
General Manager/Chief Executive Officer
4201 Corporate Drive
West Des Moines, Iowa 50266-5906

TARIFF LIBRARY
UTILITIES DIVISION

TF-95-181

IOWA TARIFF NO. 2
INTEREXCHANCE
TELECOMMUNICATIONS SERVICES

Iowa Network Services, Inc. 2nd Revised Page 84
Filed With the Board Cancels 1st Revised Page 84

6. 800 SERVICE

6.1 Application

Service between two points within the State of Iowa handled exclusively by INS or jointly by INS and other carriers is furnished as set forth in 6.2 through 6.4 following.

Customers may with Option A as set forth in Section 6.5, restrict the use of their 800 service by ordering an 800 Personal Identification Number ("PIN"). (N)

6.2 Dialing Procedure

The dialing procedure for 800 Service is 1-800-NXX-XXXX, where the NXX-XXXX is the 800 number assigned to the customer. 800 Service is available to any customer in Iowa with an 800 number that is capable of being delivered to INS by local exchange utilities.

When a customer orders an 800 Personal Identification Number ("PIN") with Option A set forth in Section 6.5, the dialing procedure is 1-800-NXX-XXXX plus the 4 digit PIN assigned to the customer. (N)

6.3 Application of Rates and Charges

6.3.1 Class of Service

800 Service is an interexchange telephone service which allows a customer to receive calls from any station within the State of Iowa at no toll charge to the calling party. The customer is responsible for all calls placed to the customer's 800 number.

Issued: June 7, 1995 Effective: JUN - 8 1995

By: William P. Bagley
General Manager/Chief Executive Officer
4201 Corporate Drive
West Des Moines, Iowa 50266-5906

TARIFF LIBRARY
UTILITIES DIVISION

IOWA TARIFF NO. 2
INTEREXCHANCE
TELECOMMUNICATIONS SERVICES

TF-95-181

6. 800 SERVICE

6.3 Application of Rates and Charges (cont'd)

6.3.2 Determination of Duration (M)

(A) The duration of a call begins when the connection is established between the calling station and the called party.

(B) The duration of a call ends when either party (called or calling) hangs up.

(C) The duration of a call does not include time lost because of faults or defects in service. (M)

By: William P. Bagley
General Manager/Chief Executive Officer
4201 Corporate Drive
West Des Moines, Iowa 50266-5906

TF- 94-523

TARIFF LIBRARY
UTILITIES DIVISION

6. 800 SERVICE (Cont'd)

6.3 Application of Rates and Charges (Cont'd)

6.3.3 Rounding

(A) Each 800 call is rounded up to the nearest one-tenth of a minute.

(B) The monthly volume of calls for each line is rounded up to the nearest minute.

(D)
(D)

6.3.4 Service Ordering Charge

The Service Ordering Charge covers receiving, recording, transmitting, processing and acting upon information relating to an order for an installation, connection, move, conversion, signal power adjustment, or change. One Service Order Charge applies for each customer requested order for all work applicable to INS 800 Service ordered at the same time to be performed on the same date at the same customer premises. Separate Service Ordering Charges apply to unrelated orders for INS 800 Service.

TF- 94-523

TARIFF LIBRARY
UTILITIES DIVISION

6. 800 SERVICE (Cont'd)

6.3 Application of Rates and Charges (Cont'd)

6.3.5 Central Office Line Charge

The Central Office Line Charge covers work associated with establishing or changing an access line. It may include, but is not limited to, installing or changing central office connections; connecting, moving or changing the drop block or buried wire; and work at the customer's premises, the serving office or intermediate locations.

6.3.6 Move/Changing Charge

The Move/Changing Charge applies when there is a physical change in the location of an access line at the request of the customer to a new location in the same building. A move normally involves an interruption of 800 Service for the period required to complete the move. No credit allowance for interruption will be granted for that period. The Move/Changing Charge also applies to work associated with changing existing access line numbers or hunting arrangements.

6.3.7 Dedicated Access Line Charge

INS 800 Service may require the customer to utilize WATS access lines or Dedicated Access Lines (DALs). The Dedicated Access Line Charge will apply if INS arranges with the relevant local exchange carrier for the installation of the customer's DAL.

TF- 94-523

TARIFF LIBRARY
UTILITIES DIVISION

6. 800 SERVICE (Cont'd)

6.3 Application of Rates and Charges (Cont'd)

6.3.8 Special Access Surcharge

This monthly recurring charge applies, in lieu of the carrier common line charge, for each termination of an access line associated with INS 800 Service at a customer's premises in a PBX or equivalent device capable of interconnecting the access line with the local exchange network. INS will bill the customer the Special Access Surcharge unless the termination is exempt as set forth in (A) following.

(A) Exceptions to the Surcharge Application

If the customer attests in writing that its facility cannot interconnect and is not interconnected with the exchange in question, the customer will not be subject to the charge for that exchange.

TF- 94-523

TARIFF LIBRARY
UTILITIES DIVISION

6. 800 SERVICE (Cont'd)

6.3 Application of Rates and Charges (Cont'd)

6.3.9 Cancellation Charge

When a customer cancels an order for service before the service is activated, a charge applies to allow INS to recover its unrecovered costs including, but not limited to, engineering, labor, materials and equipment. Charges apply as follows:

Cancellation occurs when a customer initiates a request to discontinue the processing of a service order either in part or in its entirety, prior to its completion. Cancellation Charges will be assessed for each circuit end or dedicated access line cancelled from an order prior to its completion by INS, under the following circumstances:

(1) If the local telephone company has confirmed to INS that the circuit end or dedicated access line will be installed; or,

(2) If INS has already submitted facilities orders within its company or to an interconnecting company.

TF- 94-523

TARIFF LIBRARY
UTILITIES DIVISION

6. 800 SERVICE (Cont'd)

6.4 Rates and Charges

The rates and charges for 800 Service are as follows:

6.4.1 Monthly Usage Charge

Usage (per hour)	Rate
1	$12.56

6.4.2 Service Order Charge

The Service Order Charge applies per INS 800 Service ordered.

For connecting new or additional access lines

- 2-Wire	$100.00
- 4-Wire	100.00

6.4.3 Central Office Line Charge

Per access line worked on, including but not limited to the following:

(A) Access Lines	
- 2-Wire	$185.00
- 4-Wire	195.00
(B) Number changes and hunting arrangement changes	35.00

TF- 94-523

IOWA TARIFF NO. 2
INTEREXCHANCE
TELECOMMUNICATIONS SERVICES

TARIFF LIBRARY
UTILITIES DIVISION

Iowa Network Services, Inc.
Filed With the Board

6. 800 SERVICE (Cont'd)

6.4 Rates and Charges (Cont'd)

	Monthly	Non Recurring
6.4.4 Move/Changing Charge		
For moving (same premises) or changing existing access line numbers or hunting arrangements.		
- Per order		$ 50.00
6.4.5 Dedicated Access Line Charge		
- Per line	$ 90.00	160.00
6.4.6 Special Access Surcharge		
This charge is in addition to the access line charges.		
- Per termination of an access line	36.25	
6.4.7 Cancellation Charge		
Per line/channel		130.00

Issued: October 10, 1994 Effective:

NOV 13 1994

By: William P. Bagley
General Manager/Chief Executive Officer
4201 Corporate Drive
West Des Moines, Iowa 50266-5906

TF- 95-181

TARIFF LIBRARY
UTILITIES DIVISION

6. 800 SERVICE (Cont'd)

6.5 800 Service - Option A

6.5.1 General

A customer may order 800 service which allows incoming calls to the assigned 800 number to be placed on both an interstate and intrastate basis. 800 Service - Option A is offered as an add-on to INS interstate 800 service. A customer who subscribes to this service will be charged at the rates in 6.5.3 following for the intrastate usage. Except as set forth in 6.5.2 following, all terms and conditions of INS 800 service set forth in 6.1 through 6.3.3 apply to INS 800 Service - Option A.

An 800 Personal Identification Number ("PIN") (N)
is available only with Option A. (N)

6.5.2 Application of Rates and Charges

(A) Timing of Messages

Chargeable time is determined by the day and time at the rate center of the called party when the connection is established. Chargeable time begins when connection is established between the calling station and the terminating customer premise equipment.

TF- 95-146

TARIFF LIBRARY
UTILITIES DIVISION

6. 800 SERVICE (Cont'd)

6.5 800 Service - Option A

6.5.2 Application of Rates and Charges (Cont'd)

(B) Determination of Time and Day

(1) Day Rates. These rates are applicable from 8:00 a.m. to, but not including, 5:00 p.m. Monday through Friday. (C)

(2) Evening Rates. These rates are applicable from 5:00 p.m. to, but not including, 11:00 p.m. Sunday through Friday. (C) (C)

(3) Night/Weekend Rates. These rates are applicable from 11:00 p.m. to, but not including, 8:00 a.m. Sunday through Friday, all day Saturday, and from 8:00 a.m. to, but not including 5:00 p.m. on Sunday. (C) (C)

(C) Mileage Measurement

Rates are based on the airline distance between the rate center for the calling point and the rate center for the called point, based on V & H coordinates. In general, each city, town, or locality is designated as a rate center and those localities not so designated are assigned a nearby rate center.

TF- 94-523

TARIFF LIBRARY
UTILITIES DIVISION

6. 800 SERVICE (Cont'd)

6.5 800 Service - Option A (Cont'd)

6.5.2 Application of Rates and Charges (Cont'd)

(D) Calculation of Charges

(1) The rates set forth in the rate table in 6.5.3 following are for a connection of one minute. Messages (D) are billed in tenths of a minute. Any (T) fraction of a minute is rounded up to the next tenth of a minute before calculation of the charge for the call.

(2) The total chargeable time in minutes and tenths of minutes is multiplied by the rate in effect at the beginning of the call as set forth in the rate table at 6.5.3 following.

(3) The charge calculated for the call is rounded to the nearest whole cent.

TF- 95-146

TARIFF LIBRARY
UTILITIES DIVISION

6. 800 SERVICE (Cont'd)

6.5 800 Service - Option A (Cont'd)

6.5.2 Application of Rates and Charges (Cont'd)

(E) Customized Number Charge (N)

The Customized Number Charge applies when the customer requests a specific 1-800 telephone number and requests INS to search for more than three different numbers. It applies whether or not the requested number is available.

(F) Move/Changing Charge

The Move/Changing Charge applies when the customer requests a change in the telephone number in which the call terminates.

(G) Tailored Call Coverage

The Tailored Call Coverage allows the customer to block calls from one or more specific NPAs. When included in the same request, blockage from multiple originating areas is available at no additional charge. A charge will apply when the customer changes the group of originating areas to be blocked, or when this option is removed from an 800 number. The charge applies per 800 number. (N)

TARIFF LIBRARY
UTILITIES DIVISION

TF-95-181

IOWA TARIFF NO. 2
INTEREXCHANCE
TELECOMMUNICATIONS SERVICES

Iowa Network Services, Inc. 1st Corrected 1st Revised Page 94
Filed With the Board Cancels Original Page 94

6. 800 SERVICE (Cont'd)

6.5 800 Service - Option A (Cont'd)

6.5.3 Rates and Charges

6.5.3.1 Usage Sensitive Rates (C)

Rate per Minute	
Day	Evening/Night/Wknd
$0.23	$0.19

6.5.3.2 Non-Recurring Charges — Charge

Customized Number Charge	
- Search for the first three numbers	Free
- Search for each additional number	$ 5.00
Move/Changing Charge	50.00
Tailored Call Coverage	
- Initial request	Free
- Each additional request	50.00

6.5.3.3 Monthly Recurring Charges (N)

With an 800 Personal Identification Number ("PIN"), there is a monthly recurring charge of $5 per 800 number per month. (N)

Issued: June 7, 1995 Effective: JUN - 8 1995

By: William P. Bagley
General Manager/Chief Executive Officer
4201 Corporate Drive
West Des Moines, Iowa 50266-5906

TF- 94-523

TARIFF LIBRARY
UTILITIES DIVISION

7. TWO-WAY WATS

7.1 Application

Service between two points within the State of Iowa handled exclusively by INS or jointly by INS and other carriers is furnished as set forth in 7.2 and 7.3 following.

7.2 Application of Rates and Charges

7.2.1 Class of Service

Two-Way WATS is the furnishing of WATS, described in 5.3.1 preceding, and 800 Service, described in 6.3.1 preceding, on the same access line.

7.2.2 Service Ordering Charge

The Service Ordering Charge covers receiving, recording, transmitting, processing, and acting upon information relating to an order for an installation, connection, move, conversion, signal power adjustment, or change. One Service Order Charge applies for each customer requested order for all work applicable to INS Two-Way WATS Service ordered at the same time to be performed on the same date at the same customer premises. Separate Service Ordering Charges apply to unrelated orders for INS Two-Way WATS Service.

TF- 94-523

TARIFF LIBRARY
UTILITIES DIVISION

7. TWO-WAY WATS (Cont'd)

7.2 Application of Rates and Charges (Cont'd)

7.2.3 Central Office Line Charge

The Central Office Line Charge covers work associated with establishing or changing a WATS access line. It may include, but is not limited to, installing or changing central office connections; connecting, moving or changing the drop block or buried wire; and work at the customer's premises, the serving office or intermediate locations.

7.2.4 Move/Changing Charge

The Move/Changing Charge applies when there is a physical change in the location of a WATS access line at the request of the customer to a new location in the same building. A move normally involves an interruption of Two-Way WATS Service for the period required to complete the move. No credit allowance for interruption will be granted for that period. The Move/Changing Charge also applies to work associated with changing existing access line numbers or hunting arrangements.

7.2.5 Dedicated Access Line Charge

INS Two-Way WATS Service may require the customer to utilize WATS access lines or Dedicated Access Lines (DALs). The Dedicated Access Line Charge will apply if INS arranges with the relevant local exchange carrier for the installation of the customer's DAL.

TF- 94-523

TARIFF LIBRARY
UTILITIES DIVISION

7. TWO-WAY WATS (Cont'd)

7.2 Application of Rates and Charges (Cont'd)

7.2.6 Special Access Surcharge

This monthly recurring charge applies, in lieu of the carrier common line charge, for each termination of an access line associated with INS Two-Way WATS Service at a customer's premises in a PBX or equivalent device capable of interconnecting the access line with the local exchange network. INS will bill the customer the Special Access Surcharge unless the termination is exempt as set forth in (A) following.

(A) Exceptions to the Surcharge Application

If the customer attests in writing that its facility cannot interconnect and is not interconnected with the exchange in question, the customer will not be subject to the charge for that exchange.

TF- 94-523

TARIFF LIBRARY
UTILITIES DIVISION

7. TWO-WAY WATS (Cont'd)

7.2 Application of Rates and Charges (Cont'd)

7.2.7 Cancellation Charge

When a customer cancels an order for service before the service is activated, a charge applies to allow INS to recover its unrecovered costs including, but not limited to, engineering, labor, materials and equipment. Charges apply as follows:

Cancellation occurs when a customer initiates a request to discontinue the processing of a service order either in part or in its entirety, prior to its completion. Cancellation Charges will be assessed for each circuit end or dedicated access line cancelled from an order prior to its completion by INS, under the following circumstances:

(1) If the local telephone company has confirmed to INS that the circuit end or dedicated access line will be installed; or,

(2) If INS has already submitted facilities orders within its company or to an interconnecting company.

TF- 94-523

TARIFF LIBRARY
UTILITIES DIVISION

7. TWO-WAY WATS (Cont'd)

7.3 Rates and Charges

The rates and charges for Two-Way WATS are as follows:

7.3.1 Monthly Usage Charge

Usage (per hour)	Rate
1	$13.81

7.3.2 Service Order Charge

The Service Order Charge applies per INS Two-Way WATS Service ordered.

For connecting new or additional WATS access lines

- 2-Wire	$100.00
- 4-Wire	100.00

7.3.3 Central Office Line Charge

Per WATS access line worked on, including but not limited to the following:

(A) WATS access lines	
- 2-Wire	$185.00
- 4-Wire	195.00
(B) Number changes and hunting arrangement changes.	35.00

TF- 94-523

TARIFF LIBRARY
UTILITIES DIVISION

7. TWO-WAY WATS (Cont'd)

7.3 Rates and Charges (Cont'd)

	Monthly	Non Recurring
7.3.4 Move/Changing Charge		
For moving (same premises) or changing existing access line numbers or hunting arrangements.		
Per order		$ 50.00
7.3.5 Dedicated Access Line Charge		
Per line	$ 90.00	160.00
7.3.6 Special Access Surcharge		
This charge is in addition to the access line charges.		
Per termination of an access line	36.25	
7.3.7 Cancellation Charge		
Per line/channel		130.00

7.3.8 Directory Assistance (N)

Directory Assistance Service offered by INS allows customers to request information from Directory Assistance records. Call and credit allowances are as specified in Section 9.3.1.

Rate - per call $0.50 (N)

TF- 94-523

TARIFF LIBRARY
UTILITIES DIVISION

8. DEDICATED ACCESS LINE SERVICE (DALS)

8.1 Application

Service, provided to customers that are not located in the local exchanges of the telephone companies listed in Section 9. of INS FCC Tariff No. 1, between two points within the State of Iowa handled exclusively by INS or jointly by INS and other carriers is furnished as set forth in 8.2 through 8.4 following.

8.2 Dialing Procedure

The dialing procedure for DALS is:

Area code + long distance telephone number

8.3 Application of Rates and Charges

8.3.1 Class of Service

DALS is the furnishing of dial type telecommunications between a dedicated access line and another location within the State of Iowa in accordance with the regulations and schedules of charges specified in this tariff. The dedicated access line is usually provided by the local exchange utility. DALS is available for the provision of Message Telecommunications Service, Wide Area Telecommunications Service, 800 Service, and Two-Way WATS Service to customers that are not located in the local exchanges of the telephone companies listed in Section 9. of INS FCC Tariff No. 1.

TF- 94-523

TARIFF LIBRARY
UTILITIES DIVISION

8. DEDICATED ACCESS LINE SERVICE (DALS) (Cont'd)

8.3 Application of Rates and Charges (Cont'd)

8.3.2 Rounding

(A) Each DALS call is rounded up to the nearest one-tenth of a minute.

(B) The monthly volume of calls for each line is rounded up to the nearest minute.

8.3.3 Service Ordering Charge

The Service Ordering Charge covers receiving, recording, transmitting, processing, and acting upon information relating to an order for an installation, connection, move, conversion, signal power adjustment, or change. One Service Order Charge applies for each customer-requested order for all work applicable to INS DAL Service ordered at the same time to be performed on the same date at the same customer premises. Separate Service Ordering Charges apply to unrelated orders for INS DAL Service.

8.3.4 Central Office Line Charge

The Central Office Line Charge covers work associated with establishing or changing a dedicated access line. It may include, but is not limited to, installing or changing central office connections; connecting, moving or changing the drop block or buried wire; and work at the customer's premises, the serving office or intermediate locations.

TF- 94-523

TARIFF LIBRARY
UTILITIES DIVISION

8. DEDICATED ACCESS LINE SERVICE (DALS) (Cont'd)

8.3 Application of Rates and Charges (Cont'd)

8.3.5 Move/Changing Charge

The Move/Changing Charge applies when there is a physical change in the location of a dedicated access line at the request of the customer to a new location in the same building. A move normally involves an interruption of DAL Service for the period required to complete the move. No credit allowance for interruption will be granted for that period. The Move/Changing Charge also applies to work associated with changing existing access line numbers or hunting arrangements.

8.3.6 Special Access Surcharge

This monthly recurring charge applies, in lieu of the carrier common line charge, for each termination of an access line associated with INS DAL Service at a customer's premises in a PBX or equivalent device capable of interconnecting the access line with the local exchange network. INS will bill the customer the Special Access Surcharge unless the termination is exempt as set forth in (A) following.

(A) Exceptions to the Surcharge Application

If the customer attests in writing that its facility cannot interconnect and is not interconnected with the exchange in question, the customer will not be subject to the charge for that exchange.

TF- 94-523
TARIFF LIBRARY
UTILITIES DIVISION

8. DEDICATED ACCESS LINE SERVICE (DALS) (Cont'd)

8.3 Application of Rates and Charges (Cont'd)

8.3.7 Cancellation Charge

When a customer cancels an order for service before the service is activated, a charge applies to allow INS to recover its unrecovered costs including, but not limited to, engineering, labor, materials and equipment. Charges apply as follows:

Cancellation occurs when a customer initiates a request to discontinue the processing of a service order either in part or in its entirety, prior to its completion. Cancellation charges will be assessed for each circuit end or dedicated access line cancelled from an order prior to its completion by INS, under the following circumstances:

(1) If INS has confirmed to the customer that the circuit end or dedicated access line will be installed; or

(2) If INS has already submitted facilities orders within its company or to an interconnecting company.

TF- 94-523

TARIFF LIBRARY
UTILITIES DIVISION

8. DEDICATED ACCESS LINE SERVICE (DALS) (Cont'd)

8.4 Rates and Charges

The rates and charges for DALS are as follows:

8.4.1 Basic Rates

DALS is available on the basis of a usage charge and is subject to a basic monthly recurring charge and a non-recurring charge.

Usage (per hour)	Rate
1	$ 8.26

	Monthly	Non Recurring
Per line	$ 90.00	$160.00

8.4.2 Service Order Charge

The Service Order Charge applies per INS DAL Service ordered.

For connecting new or additional dedicated access lines

- 2-Wire	100.00
- 4-Wire	100.00

TF 94-523

TARIFF LIBRARY
UTILITIES DIVISION

8. DEDICATED ACCESS LINE SERVICE (DALS) (Cont'd)

8.4 Rates and Charges (Cont'd)

8.4.3 Central Office Line Charge

Per dedicated access line worked on, including but not limited to the following:

(A)	Dedicated access lines	
	- 2-Wire	$185.00
	- 4-Wire	195.00
(B)	Number changes and hunting arrangement changes.	35.00

8.4.4 Move/Changing Charge

For moving (same premises) or changing existing access line numbers or hunting arrangements .

- Per order	50.00

TF- 94-523

TARIFF LIBRARY
UTILITIES DIVISION

IOWA TARIFF NO. 2
INTEREXCHANCE
TELECOMMUNICATIONS SERVICES

Iowa Network Services, Inc.
Filed With the Board

8. DEDICATED ACCESS LINE SERVICE (DALS) (Cont'd)

8.4 Rates and Charges (Cont'd)

8.4.5 Special Access Surcharge	Monthly	Non Recurring
This charge is in addition to other monthly recurring charges.		
Per termination of an access line	$ 36.25	

8.4.6 Cancellation Charge		
Per line/channel		$130.00

Issued: October 10, 1994 Effective:

NOV 13 1994

By: William P. Bagley
General Manager/Chief Executive Officer
4201 Corporate Drive
West Des Moines, Iowa 50266-5906

TF 94-523

TARIFF LIBRARY
UTILITIES DIVISION

9. DIRECTORY ASSISTANCE SERVICE (N)

9.1 Nature of Service

Directory Assistance is a telephone service whereby INS customers may obtain assistance in determining telephone numbers by calling a Directory Assistance number. The Directory Assistance charge specified in Section 9.4 of this tariff applies when a customer within Iowa requests the telephone number of other customers within Iowa.

9.2 Dialing Procedure

Long distance direct dialed Directory Assistance, from customers who select INS as their 1+ carrier, is obtained by dialing 1+ area code + 555-1212; where the area code is different from the one in which the customer places the call. (N)

TF- 94-523

TARIFF LIBRARY
UTILITIES DIVISION

9. DIRECTORY ASSISTANCE SERVICE (Cont'd) (N)

9.3 Application of Rates and Charges

9.3.1 Allowance

(A) A call allowance will be given to customers who have chosen INS as their presubscribed carrier. During each of the first twelve months after the effective date of this tariff, the first seven calls shall be free; thereafter, the first two calls each month shall be free.

(B) A credit allowance will be given, i.e., the charge that would otherwise apply will be waived, when:

(1) The customer experiences poor transmission or is cut-off during the call to Directory Assistance,

(2) The customer is given an incorrect telephone number by the Directory Assistance operator, or

(3) The customer has inadvertently misdialed and has reached Directory Assistance for the wrong area code.

To obtain such a credit/waiver, the customer must promptly notify his or her customer Service Representative (Local Exchange Telephone Company).

9.3.2 Non-transferable

Call Allowances are not transferable between accounts. (N)

TF- 94-523

TARIFF LIBRARY
UTILITIES DIVISION

9. DIRECTORY ASSISTANCE SERVICE (Cont'd) (N)

9.3 Application of Rates and Charges (Cont'd)

9.3.3 Exemptions

The rates specified in Section 9.4 are not applicable to:

(A) Calls placed from hotels and motels

(B) Calls placed from hospitals

(C) Calls placed from customers with disabilities who qualify for exemptions, due to physical or visual limitations, from the local Directory Assistance charges under Local Exchange Company tariff(s).

9.4 Rates

Dialed calls over which INS facilities are used (maximum of two requests per call):

Rate per Call	
$0.50	(N)

TF- 94-523

TARIFF LIBRARY
UTILITIES DIVISION

10. INS PREPAID CARD SERVICE (N)

10.1 Nature of Service

INS Prepaid Card Service provides an outbound voice communications service for calls charged to an INS Prepaid Card.

10.2 Availability of Service

INS Prepaid Card Service is available twenty-four hours a day, seven days a week from Dual Tone Multi-Frequency telephones. The number of available INS Prepaid Cards is subject to technical limitations. Such cards will be offered to customers on a first come, first served basis.

INS Prepaid Calling Card Service customers may originate calls at any telephone in Iowa and may terminate calls in Iowa.

10.3 Dialing Procedure

INS Prepaid Card Service is accessed using the INS 800 number printed on the card. (N)

TF- 94-523

TARIFF LIBRARY
UTILITIES DIVISION

10. INS PREPAID CARD SERVICE (Cont'd) (N)

10.4 Other Conditions of Service

- The following types of calls may not be completed with the INS Prepaid Card Service:

  -- Calls to 700 numbers
  -- Calls to 800 numbers
  -- Calls to 900 numbers
  -- Collect calls
  -- Person-to-Person calls
  -- Busy Line Verification and Interrupt Services
  -- Calls requiring the quotation of time and charges

- Calls may only be charged against an INS Prepaid Card that has a sufficient available balance.

- All calls are rounded to the next higher full minute.

- INS Prepaid Card balances will be reduced and depleted based upon customer usage. Customers will be given notice one minute before the available card balance is depleted. When the balance of available time is depleted, the call will be terminated.

- INS Prepaid Cards are non-refundable and will expire on the date specified on the card, by the carrier or in the package in which the card is included.

- INS will provide a credit equal to one minute of applicable service for INS Prepaid Card calls that are interrupted or are subject to inadequate transmission. Credits will not be issued when an interruption of service deficiency is not reported to INS. (N)

NOV 13 1994

TF 94-523

TARIFF LIBRARY
UTILITIES DIVISION

10. INS PREPAID CARD SERVICE (Cont'd) (N)

10.5 Rates

10.5.1 Retail

INS Prepaid Cards may be obtained from INS or from agents of INS in various denominations.

- The rate per minute (or fraction thereof), inclusive of all taxes: $ 0.45
- Directory Assistance -- each Directory Assistance Call: 0.90
- One-time charge for a renewable INS Prepaid card: 1.00

10.5.2 Wholesale

INS Prepaid Cards may be obtained from INS by its agents for their own use, or for resale to their end user customers.

- Account Activation Fee: $100.00
- Minimum monthly purchase: 500.00
- The rate per minute (or fraction thereof), inclusive of all taxes: 0.35 (N)

By: William P. Bagley
General Manager/Chief Executive Officer
4201 Corporate Drive
West Des Moines, Iowa 50266-5906

TF- 95-146

IOWA TARIFF NO. 2
INTEREXCHANCE
TELECOMMUNICATIONS SERVICES

TARIFF LIBRARY
UTILITIES DIVISION

11. TRAVEL SERVICE (N)

11.1 Application

Service between two points within the State of Iowa handled exclusively by INS or jointly by INS and other carriers is furnished as set forth in 11.2 through 11.5 following.

11.2 Dialing Procedure

The dialing procedure for Travel Service is as follows:

1 + 800 + 674 + 7444 for mechanized calling card calls,
or
1 + 800 + 674 + 7444 + 0 for operator assisted calls.

11.3 Mileage Measurement

Rates will be calculated on the basis of the airline distance between the rate center for the calling point and the rate center for the called point. Airline distance is determined according to the V&H coordinate table contained in AT&T's Tariff.

11.4 Application of Rates and Charges

11.4.1 Initial Period, Additional Periods, and Surcharges

a. Initial period rates set forth in the rate table in 11.5 following are for a connection of one minute or any fraction thereof.

b. Subsequent usage beyond the initial minute will be rounded to the next full minute. (N)

TF- 95-146

TARIFF LIBRARY
UTILITIES DIVISION

11. TRAVEL SERVICE (Cont'd) (N)

11.4 Application of Rates and Charges (Cont'd)

11.4.1 Initial Period, Additional Periods, and Surcharges (Cont'd)

c. The charge calculated for the initial minute plus additional minutes will determine the total usage charge for the call. The total usage charge amount of the call is rounded up to the nearest whole cent.

d. A surcharge will apply to the call based upon the degree of operator services required to complete the call. These surcharges are set forth in 11.5.2 following.

11.4.2 Timing of Messages

a. Chargeable time is determined as follows.

(1) The date, day and time (standard or daylight savings) at the rate center of the calling party when the connection is established determines the initial period charge.

(2) The charge for the initial period is the initial period billing rate applicable for the rate period in which the message connect time occurs. The charges for each additional period of usage is the additional billing rate for the rate period in which the beginning of each additional period of usage occurs. (N)

TF- 95-146
TARIFF LIBRARY
UTILITIES DIVISION

11. TRAVEL SERVICE (Cont'd) (N)

11.4 Application of Rates and Charges (Cont'd)

11.4.2 Timing of Messages (Cont'd)

b. Chargeable time begins when connection is established between the calling station and the called party.

c. Chargeable time ends when either party (called or calling) hangs up.

11.4.3 Determination of Time and Day

a. Day Rates. These rates are applicable from 8:00 a.m. to, but not including, 5:00 p.m. Monday through Friday with the exception of holidays.

b. Evening Rates. These rates are applicable from 5:00 p.m. to, but not including, 11:00 p.m. Sunday through Friday.

c. Night/Weekend Rates. These rates are applicable from 11:00 p.m. to, but not including, 8:00 a.m. Sunday through Friday, all day Saturday and from 8:00 a.m. to, but not including, 5:00 p.m. on Sunday. (N)

TF- 95-146

TARIFF LIBRARY
UTILITIES DIVISION

11. TRAVEL SERVICE (Cont'd) (N)

11.4 Application of Rates and Charges (Cont'd)

11.4.4 Rates Applicable on Certain Holidays

On New Year's Day, Martin Luther King Day, President's Day, Memorial Day, Independence Day, Labor Day, Columbus Day, Veteran's Day, Thanksgiving Day, and Christmas Day, the holiday rate applicable is the evening rate unless a lower rate would normally apply. If the holiday falls on a Saturday, the holiday rates are applied on the preceding Friday. If the holiday falls on a Sunday, the holiday rate is applied to calls placed on the following Monday. (N)

TF- 95-146

TARIFF LIBRARY
UTILITIES DIVISION

11. TRAVEL SERVICE (Cont'd) (N)

11.5 Rates and Charges

11.5.1 Usage Charges

The following charges apply per minute to travel service usage.

	Mileage Bands	Initial Minute	Additional Minutes
Day	0 - 10	$0.185	$0.185
	11 - 22	0.205	0.205
	23 - 55	0.215	0.215
	56 - 350	0.225	0.225
Evening	0 - 10	0.125	0.125
	11 - 22	0.145	0.145
	23 - 55	0.155	0.155
	56 - 350	0.155	0.155
Night/Wknd	0 - 10	0.105	0.105
	11 - 22	0.115	0.115
	23 - 55	0.125	0.125
	56 - 350	0.125	0.125 (N)

TF- 95-146

TARIFF LIBRARY
UTILITIES DIVISION

11. TRAVEL SERVICE (Cont'd) (N)

11.5 Rates and Charges (Cont'd)

11.5.2 Surcharges

The following surcharge will apply to each travel service message as set forth below:

a. Mechanized Travel Service

Customers who dial the travel service access number as described in 11.2 and then enter their individual travel service card number at the tone, or who provide their Travel Service card number to the operator when INS does not have automatic recording equipment to record the travel service card number, will be assessed the following charge:

- Each completed call $0.65 (N)

Tariff

No. 3

PUBLIC VERSION

TF - 93-366

IOWA TARIFF NO. 3
LINK PLUS SERVICES (T)

Iowa Network Services, Inc.
Filed with the Board

1st Revised Title Page
Cancels Original Title Page

TARIFF LIBRARY
UTILITIES DIVISION

Iowa Network Services, Inc.

Telephone Tariff

Filed With

Iowa State Utilities Board

REGULATIONS, RATES AND CHARGES

APPLYING TO THE PROVISION OF

LINK PLUS SERVICES (T)

Issued: September 9, 1993 Effective: OCT 15 1993

By: William P. Bagley
General Manager
4201 Corporate Drive
West Des Moines, IA 50266-5906

TF- 95-86

IOWA TARIFF NO. 3
LINKPLUS SERVICES

TARIFF LIBRARY
UTILITIES DIVISION

Iowa Network Services, Inc. 2nd Revised Page 1
Filed with the Board Cancels 1st Revised Page 1

CHECK SHEET

The Title Page and Pages 1 to 57 inclusive of the tariff are effective as of the date shown. Original and revised pages as named below contain all changes from the original tariff that are in effect on the date hereof.

Page	Number of Revision Except as Indicated	Page	Number of Revision Except as Indicated	Page	Number of Revision Except as Indicated
Title	1st	21	1st	39	1st
1	2nd*	22	2nd*	40	1st
2	1st	23	1st	41	2nd*
3	1st	24	1st	42	1st
4	1st	25	1st	43	1st
5	2nd*	26	1st	44	1st
5.1	1st*	27	1st	45	2nd*
6	1st	28	1st	46	1st
7	1st	29	1st	47	2nd*
7.1	Original	30	1st	47.1	Original*
7.2	Original	31	1st	48	1st
8	1st	32	1st	49	1st
9	1st	32.1	Original	50	1st
10	1st	33	1st	51	1st
11	1st	34	1st	52	1st
12	1st	35	1st	53	Original
13	1st	36	1st	54	1st*
14	1st	37	1st	55	1st*
15	1st	37.1	Original	56	Original
16	1st	37.2	Original	57	Original
17	1st	38	2nd*		
18	1st	38.1	1st		
19	1st	38.2	Original		
20	1st	38.3	Original		

* New or revised page

Issued: March 9, 1995 Effective: APR 9 1995

By: William P. Bagley
General Manager/Chief Executive Officer
4201 Corporate Drive
West Des Moines, IA 50266-5906

TF - 93-366

TARIFF LIBRARY
UTILITIES DIVISION

IOWA TARIFF NO. 3
LINK PLUS SERVICES (T)

Iowa Network Services, Inc.
Filed with the Board

1st Revised Page 2
Cancels Original Page 2

TABLE OF CONTENTS

		Page No.	
	CHECK SHEET	1	
	CONCURRING CARRIERS	6	
	CONNECTING CARRIERS	6	
	OTHER PARTICIPATING CARRIERS	6	
	REGISTERED SERVICE MARKS/REGISTERED TRADEMARKS	6	
	EXPLANATION OF SYMBOLS	7	
	EXPLANATION OF ABBREVIATIONS	7.1	(N)
1.	APPLICATION OF TARIFF	8	
2.	GENERAL REGULATIONS	9	
	2.1 Undertaking of INS	9	
	2.1.1 Scope	9	
	2.1.2 Limitations	9	
	2.1.3 Liability	11	
	2.1.4 Availability of Service	12	(N)
	2.2 Use	13	
	2.2.1 Use of Service	13	
	2.2.2 Abuse and Fraudulent Use	13	
	2.2.3 Unlawful Purposes	14	
	2.2.4 Cancellation for Cause	14	
	2.2.5 Interference or Impairment	15	
	2.3 Definitions	16	
	Board	16	
	Calls	16	
	Charges	16	

Issued: September 9, 1993 Effective: OCT 15 1993

By: William P. Bagley
General Manager
4201 Corporate Drive
West Des Moines, IA 50266-5906

TF - 93-366

TARIFF LIBRARY
UTILITIES DIVISION (T)

TABLE OF CONTENTS (Cont'd)

Page No.

2. GENERAL REGULATIONS (Cont'd)

2.3 Definitions (Cont'd)

Customer 16
Customer Premises Equipment 16
Delinquent or Delinquency 17
Disconnect 17
Exchange 17
Exchange Service Area or Exchange Area 17 (T)
Individual Case Basis 17
Interexchange Service 18
Interexchange Utility 18
Local Access and Transport Area (LATA) 18
Local Exchange Utility 18
Local Service 18
Local Service Area 19
Local Utility 19
Message 19
Premises 19
Rates 19
Suspend 19
Tariff 20
Telephone Utility or Utility 20
Timely Payment 20

2.4 Maintenance of Services 21

2.5 Disconnection of Service 22

2.5.1 Without Prior Notice 22
2.5.2 With Prior Notice 23
2.5.3 Notice 24
2.5.4 Suspended Service 25

TF - 93-366
TARIFF LIBRARY
UTILITIES DIVISION

IOWA TARIFF NO. 3
LINK PLUS SERVICES (T)

Iowa Network Services, Inc.
Filed with the Board

1st Revised Page 4
Cancels Original Page 4

TABLE OF CONTENTS (Cont'd)

	Page No.	
2. GENERAL REGULATIONS (Cont'd)		
2.6 Engineering	26	
2.6.1 Requirement for Good Engineering Practice	26	
2.6.2 Adequacy of Service	26	
2.6.3 Service Interruption	27	
2.7 Safety	28	
2.8 Held Applications	30	
2.9 Customer Information	30	
2.10 Customer Complaints	31	
2.11 Obligations of the Customer	32	
2.11.1 Damages	32	
2.11.2 Ownership of Facilities and Theft	33	
2.11.3 Availability for Testing	33	
2.11.4 Claims and Demands for Damages	33	
2.12 Payment Arrangements and Credit Allowances	34	(T)
2.12.1 Payment of Rates, Charges and Deposits	34	(T)
2.12.2 Rates for Fractional Periods	37.1	(N)
2.12.3 Cancellation of Application for Service	37.1	(N)
2.13 Application for Service	37.2	(T)
2.14 Interutility Rates to INS Independent Companies	38	
2.15 Special Arrangements	38.2	(N)

Issued: September 9, 1993 Effective: OCT 15 1993

By: William P. Bagley
General Manager
4201 Corporate Drive
West Des Moines, IA 50266-5906

TF- 95-86

TARIFF LIBRARY
UTILITIES DIVISION

TABLE OF CONTENTS (Cont'd)

		Page No.	
3.	ORDERING OPTIONS	39	
	3.1 Rates and Charges Associated with Voice Messaging Service Ordering	40	
4.	LINK PLUS VOICE MESSAGING SERVICE	41	
	4.1 General	41	
	4.2 Basic Service Features	41	
	4.3 Optional Service Features	43	
	4.4 Rates and Charges	46	
	4.4.1 Link Plus Packages	46	
	4.4.2 Chargeable Optional Features	47.1	(C)
5.	LINK PLUS INFORMATION ONLY SERVICE	48	
	5.1 General	48	
	5.2 Rates and Charges	48	
6.	LINK PLUS TOLL FREE SERVICE	49	
	6.1 General	49	
	6.2 Rates and Charges	49	
7.	LINK PLUS 800 SERVICES	50	
	7.1 General	50	
8.	LINK PLUS FOR CELLULAR SERVICE	51	

TF- 95-86

TARIFF LIBRARY
UTILITIES DIVISION

TABLE OF CONTENTS (Cont'd)

		Page No.	
9.	LINK PLUS FAXMAIL	52	
	9.1 General	52	
	9.2 Basic Service Features	52	
	9.3 Optional Service Features	53	
	9.4 Rates and Charges	53	
10.	LINK PLUS BROADCAST FAX	54	
	10.1 General	54	
	10.2 Basic Service Features	54	
	10.3 Optional Service Features	54	
	10.4 One-Time Broadcast Fax Service	54	(N)
	10.5 Rates and Charges	55	
11.	LINK PLUS FAX ON DEMAND	56	
	11.1 General	56	
	11.2 Basic Service Features	56	
	11.3 Rates and Charges	56	
12.	PROMOTIONS AND DISCOUNTS	57	

TF - 93-366

TARIFF LIBRARY
UTILITIES DIVISION (T)

CONCURRING CARRIERS

NO CONCURRING CARRIERS

CONNECTING CARRIERS

NO CONNECTING CARRIERS

OTHER PARTICIPATING CARRIERS

NO OTHER PARTICIPATING CARRIERS

REGISTERED SERVICE MARKS	REGISTERED TRADEMARKS
NONE	NONE

OCT 15 1993

By: William P. Bagley
General Manager
4201 Corporate Drive
West Des Moines, IA 50266-5906

TF - 93-3661

TARIFF LIBRARY
UTILITIES DIVISION

IOWA TARIFF NO. 3
LINK PLUS SERVICES (T)

Iowa Network Services, Inc.
Filed with the Board

1st Revised Page 7
Cancels Original Page 7

EXPLANATION OF SYMBOLS

(C) - Changed Regulation

(D) - Discontinued Rate or Regulation

(I) - Increase in Rate

(N) - New Rate or Regulation

(R) - Reduction in Rate

(T) - Change in Text Only

Issued: September 9, 1993 Effective: OCT 15 1993

By: William P. Bagley
General Manager
4201 Corporate Drive
West Des Moines, IA 50266-5906

TF - 93-3661
TARIFF LIBRARY
UTILITIES DIVISION

 (T)

EXPLANATION OF ABBREVIATIONS

ANI	-	Automatic Number Identification	(N)
AT&T-C	-	AT&T Communications	
BD	-	Business Day	
BHMC	-	Busy Hour Minutes of Capacity	
CCS	-	Common Channel Signaling	
CCSA	-	Common Channel Signaling Access	
CCSAN	-	Common Channel Signaling Access Network	
CO	-	Central Office	
COCTX	-	Central Office Centrex	
COE	-	Central Office Equipment	
Cont'd	-	Continued	
CPE	-	Customer Provided Equipment	
Ctx	-	Centrex	
DA	-	Directory Assistance	
DDD	-	Direct Distance Dialing	
ESS	-	Electronic Switching System	
ESSX	-	Electronic Switching System Exchange	
EXM	-	Exit Message	
FAX	-	Facsimile	
F.C.C.	-	Federal Communications Commission	
FX	-	Foreign Exchange	
HC	-	High Capacity	
Hz	-	Hertz	
IC	-	Interexchange Carrier	
ICB	-	Individual Case Basis	
kbps	-	kilobits per second	
kHz	-	kilohertz	
LATA	-	Local Access and Transport Area	
LIDB	-	Line Information Data Base	
Mbps	-	Megabits per second	
MEANS	-	Minnesota Equal Access Network Services, Inc.	
MHz	-	Megahertz	
MMUC	-	Minimum Monthly Usage Charge	
MRC	-	Monthly Recurring Charge	(N)

TF - 93-366

TARIFF LIBRARY
UTILITIES DIVISION

(T)

EXPLANATION OF ABBREVIATIONS (Cont'd)

MT	-	Metallic	(N)
MTS	-	Message Telecommunications Service(s)	
NPA	-	Numbering Plan Area	
NRC	-	Nonrecurring Charge	
NTS	-	Non-Traffic Sensitive	
NXX	-	Three-Digit Central Office Code	
PBX	-	Private Branch Exchange	
POT	-	Point of Termination	
PTC	-	Participating Telephone Company	
RSM	-	Remote Switching Modules	
RSS	-	Remote Switching Systems	
SAC	-	Service Access Code	
SCP	-	Service Control Point	
SNAC	-	Signaling Network Access Connection	
SPOI	-	Signaling Point of Interconnection	
SS7	-	Signaling System 7	
SSN	-	Switched Service Network	
SSP	-	Service Switching Point	
STP	-	Signal Transfer Point	
SWC	-	Serving Wire Center	
TES	-	Telephone Exchange Service(s)	
TSPS	-	Traffic Service Position System	
TTP	-	Toll Transfer Point	
TV	-	Television	
USOC	-	Uniform Service Order Code	
VG	-	Voice Grade	
V&H	-	Vertical & Horizontal	
WATS	-	Wide Area Telecommunications Service(s)	(N)

TF - 93-366 1

TARIFF LIBRARY
UTILITIES DIVISION (T)

1. APPLICATION OF TARIFF

1.1 This Tariff applies to services marketed under the name Link Plus, and furnished by Iowa Network Services, Inc., hereinafter referred to as INS within the State of Iowa. (T) (T)

1.2 The regulations, rates and charges which are set forth in the body of this tariff apply to Voice Messaging Services provided to customers from the INS Centigram system located in Des Moines, Iowa; and to Facsimile (Fax) services provided to customers utilizing equipment located in Omaha, Nebraska and provided by Prairie Systems. (T) (T) (N) (N)

1.3 Access to the voice and fax mailboxes in the systems by either the customer or the caller may be made on a local, intraLATA, or interLATA basis. (N)

TF - 93-366

TARIFF LIBRARY
UTILITIES DIVISION

2. GENERAL REGULATIONS

2.1 Undertaking of INS

2.1.1 Scope

Link Plus Services are furnished within Iowa in accordance with the conditions and regulations which are set forth in the body of this tariff. (T)

2.1.2 Limitations

(A) The customer may not assign or transfer the use of services provided under this tariff; however, where there is no interruption of use or relocation of the services, such assignment or transfer may be made to:

(1) Another customer, whether an individual, partnership, association or corporation, provided the assignee or transferee assumes all outstanding indebtedness and current charges for such services, if any; or a court-appointed receiver, trustee or other person acting pursuant to law in bankruptcy, receivership, reorganization, insolvency, liquidation or other similar proceedings, provided the assignee or transferee assumes the current charges applicable to such services, if any.

In all cases of assignment or transfer, the written acknowledgment of INS is required prior to such assignment or transfer. INS shall provide written acknowledgment within fifteen (15) days from the receipt of the notification of assignment or transfer. All regulations and conditions contained in this tariff shall apply to such assignee or transferee.

TF - 93-366
TARIFF LIBRARY
UTILITIES DIVISION

(T)

2. GENERAL REGULATIONS (Cont'd)

2.1 Undertaking of INS (Cont'd)

2.1.2 Limitations (Cont'd)

(A) (1) (Cont'd)

The assignment or transfer of services does not relieve or discharge the assignor or transferor from remaining jointly or severally liable with the assignee or transferee for any obligations existing at the time of the assignment or transfer.

(B) Interconnection with Other Carriers

Service furnished by INS may be connected with services or facilities of another participating carrier or may be provided over facilities solely provided by local utilities and/or interexchange utilities other than INS. Service furnished by INS is not part of a joint undertaking with such other carriers.

(C) Force Majeure

Upon compliance with the Board's rules on discontinuance of service, INS reserves the right to discontinue furnishing service upon written notice when necessitated by events or circumstances beyond its control or when the customer is using the service in violation of the provisions of this tariff or in violation of the law.

2. GENERAL REGULATIONS (Cont'd)

2.1 Undertaking of INS (Cont'd)

2.1.3 Liability

(A) The liability of INS for damages to any party arising out of mistakes, omissions, interruptions, delays, errors, or defects in transmission occurring in the course of furnishing service or facilities shall in no event exceed an amount equivalent to the proportionate charge by INS for the period of service during which such mistake, omission, interruption, delay, error, or defect in transmission occurs.

(B) The customer indemnifies and saves INS harmless against claims for libel, slander, or infringement of copyright arising from the material transmitted over or stored in its facilities; against claims for infringement of patents arising from combining with, or used in connection with, facilities of INS apparatus and systems of the customer; and against all other claims arising out of any act or omission of the customer in connection with facilities provided by INS.

(C) No carrier participating in this service shall be liable for any act or omission of any other carrier also participating in the service.

(D) INS shall not be liable for damage arising out of mistakes, omissions, interruptions, delays, errors, or defects in transmission or other injury, which is caused by customer provided equipment or non-INS services being used in conjunction with INS' service. It shall be the customer's responsibility to ensure that the customer premise equipment is compatible with the service furnished by INS.

TF - 93-366

TARIFF LIBRARY
UTILITIES DIVISION (T)

2. GENERAL REGULATIONS (Cont'd)

2.1 Undertaking of INS (Cont'd)

2.1.3 Liability (Cont'd)

(E) INS shall not be liable for damages arising out of the use of the INS network or facilities for the transmission of other than voice grade service.

(F) Now, or at any future time, if a state, county, or other local taxing authority possesses or acquires the legal right to impose a sales tax, gross receipts tax, or other similar charge upon INS based upon the services rendered to the customer, and has imposed, or imposes the same ordinance or otherwise, such taxes, fee, or charges shall be billed to the customers receiving service within the territorial limits of such taxing authority. Such billing shall allocate the tax, fee, or charge among customers uniformly on the basis of each customer's monthly charges for the types of service made subject to such tax, fee, or charge.

(G) INS does not guarantee or make any warranty with respect to its services when used in an explosive atmosphere. INS shall be indemnified, defended, and held harmless by the customer from any and all claims by any person relating to the customer's use of services so provided.

2.1.4 Availability of Service (N)

The furnishing of service under this tariff will require certain physical arrangements of the facilities of INS and its suppliers and is, therefore, subject to the availability of such facilities. (N)

TF - 93-366

TARIFF LIBRARY
UTILITIES DIVISION

(T)

2. GENERAL REGULATIONS (Cont'd)

2.2 Use

2.2.1 Use of Service

This service is provided for use by the customer and may be used by others, when so authorized by the customer, subject to the provisions of this tariff.

2.2.2 Abuse and Fraudulent Use

The service is furnished subject to the condition that there will be no abuse or fraudulent use of the service. Abuse or fraudulent use of service includes:

(A) The use of service or facilities of INS to transmit or store a message without payment of the charge applicable for service;

(B) The obtaining, or attempting to obtain, or assisting another to obtain or to attempt to obtain, Link Plus Services, by rearranging, tampering with, or making connection with any facilities of INS, or by any trick, scheme, false representation, or false credit device, or by or through any other fraudulent means or device whatsoever, with intent to avoid the payment, in whole or in part, of the regular charge for such service; (T)

(C) The use of service or facilities of INS for a call or calls, anonymous or otherwise, if in a manner which could reasonably be expected to frighten, abuse, torment, or harass another;

(D) The use of profane or obscene language;

TF - 93-366
TARIFF LIBRARY
UTILITIES DIVISION

2. GENERAL REGULATIONS (Cont'd)

2.2 Use (Cont'd)

2.2.2 Abuse and Fraudulent Use (Cont'd)

(E) The use of the service in such a manner as to interfere unreasonably with the use of the service by one or more other customers.

2.2.3 Unlawful Purposes

The service is furnished subject to the condition it will not be used for an unlawful purpose. Service will not be furnished if any law enforcement agency, acting within its jurisdiction, advises that such service is being used or will be used in violation of law. If INS receives other evidence giving reasonable cause to believe that such service is being or will be so used, it will either discontinue or deny the service or refer the matter to the appropriate law enforcement agency.

2.2.4 Cancellation for Cause

Upon compliance with the Board's rules on disconnection of service, INS may either suspend, terminate without suspension, or refuse service without incurring any liability.

TF - 93-366

TARIFF LIBRARY
UTILITIES DIVISION

2. GENERAL REGULATIONS (Cont'd)

2.2 Use (Cont'd)

2.2.5 Interference or Impairment

The characteristics and methods of operation of any circuits, facilities, or equipment provided by other than INS and associated with the facilities utilized to provide services under this tariff shall not interfere with or impair service over any facilities of INS or its affiliated companies or divisions involved in its services, cause damage to their plant, impair the privacy of any communications carrier over their facilities, or create hazards to the employees of any of them or the public.

TF - 93-366
TARIFF LIBRARY
UTILITIES DIVISION

(T)

2. GENERAL REGULATIONS (Cont'd)

2.3 Definitions

Board

The term "Board" means the Iowa State Utilities Board.

Calls

The term "Calls" means telephone messages attempted by customers or users.

Charges

The term "Charges" means recurring and nonrecurring amounts billed to customers for tariffed services.

Customer

The term "Customer" means any person, firm, association, corporation, agency of the federal, state, or local government, or legal entity, responsible by law for the payment of charges and compliance with the regulations of this tariff.

Customer Premises Equipment

The term "Customer Premises Equipment" means all terminal equipment normally used on the customer's premises owned by the customer or by the telephone utility or some other supplier and leased to the customer.

2. GENERAL REGULATIONS (Cont'd)

2.3 Definitions (Cont'd)

Delinquent or Delinquency

The terms "Delinquent" or "Delinquency" mean an account for which an uncontested bill or payment agreement for regulated services has not been paid in full on or before the last day for timely payment. The term can also relate to a contested bill once the Board finds the customer's complaint without merit.

Disconnect

The term "Disconnect" means the disabling of circuitry preventing outgoing and/or incoming communications from the INS voice messaging system.

Exchange

The term "Exchange" means a unit established by the local exchange utility for the administration of local communication services.

Exchange Service Area or Exchange Area

The terms "Exchange Service Area" or "Exchange Area" refer to the general area in which the local telephone utility holds itself out to furnish exchange telephone service.

Individual Case Basis

The term "Individual Case Basis" means the application of a rate, charge, or condition of the tariff as determined by individual circumstances.

TARIFF LIBRARY
UTILITIES DIVISION (T)

2. GENERAL REGULATIONS (Cont'd)

2.3 Definitions (Cont'd)

Interexchange Service

The term "Interexchange Service" is the provision of intrastate telecommunications services and facilities between local exchanges.

Interexchange Utility

The term "Interexchange Utility" means a utility, a resale carrier or other entity that provides intrastate telecommunications services and facilities between exchanges within Iowa without regard to how such traffic is carried. A local exchange utility that provides interexchange service may also be considered an interexchange utility.

Local Access and Transport Area (LATA)

The term "Local Access and Transport Area" denotes a geographic area established for the provision and administration of communications service. It encompasses one or more designated exchanges, which are grouped to serve common social, economic, and other purposes.

Local Exchange Utility

The term "Local Exchange Utility" means a telephone utility that provides local service under a tariff filed with the Board. The utility may also provide other services and facilities such as access services.

Local Service

The term "Local Service" means telephone service furnished between customers or users located within an exchange area.

TF - 93-366

TARIFF LIBRARY
UTILITIES DIVISION (T)

2. GENERAL REGULATIONS (Cont'd)

2.3 Definitions (Cont'd)

Local Service Area

The term "Local Service Area" means the area within which are located the lines to which calls may be made under a specified schedule of exchange rates without payment of toll charges.

Local Utility

See "Local Exchange Utility".

Message

The term "Message" means a completed telephone call by a customer or user.

Premises

The term "Premises" denotes the space occupied by an individual customer in a building, in adjoining buildings occupied partially or entirely by that customer, or separate buildings occupied by the customer within the State of Iowa.

Rates

The term "Rates" shall mean recurring and nonrecurring amounts billed to customers for regulated services and equipment.

Suspend

The term "Suspend" means temporary impairment of service which shall disallow retrieval of stored messages by the customer.

TF - 93-3661

TARIFF LIBRARY
UTILITIES DIVISION

(T)

2. GENERAL REGULATIONS (Cont'd)

2.3 Definitions (Cont'd)

Tariff

The term "Tariff" means the entire body of regulated rates, tolls, rentals, charges, classifications, rules, procedures, policies, etc. adopted and filed with the Board by a telephone utility in fulfilling its role of furnishing communications service.

Telephone Utility or Utility

The terms "Telephone Utility" or "Utility" mean any person, partnership, business association, or corporation, domestic or foreign, owning or operating any facilities for furnishing communications service to the public for compensation.

Timely Payment

The term "Timely Payment" is a payment on a customer's account made on or before the due date shown: (1) on a current bill for rates and charges, or (2) by an agreement between the customer and utility for a series of partial payments to settle a delinquent account.

TF - 93-3661
TARIFF LIBRARY
UTILITIES DIVISION

2. GENERAL REGULATIONS (Cont'd)

2.4 Maintenance of Services

The services provided under this tariff shall be maintained by INS. The customer or others may not rearrange, move, disconnect, remove or attempt to repair any facilities provided by INS, except with the written consent of INS.

INS shall adopt and pursue a maintenance program aimed at achieving efficient operation of its system so as to promote the rendering of safe, adequate and continuous service at all times. Maintenance shall include keeping all plant and equipment in a good state of repair consistent with safe and adequate service performance. Broken, damaged or deteriorated parts which are no longer serviceable shall be repaired or replaced. Adjustable apparatus and equipment shall be readjusted as necessary when found by preventive routines or fault location tests to be in unsatisfactory operating condition. Electrical faults, such as noise induction, cross talk, or poor transmission characteristics shall be corrected to the extent practical within the design capability of the plant affected.

Records of various tests and inspections shall be kept on file in the office of INS for a minimum of one (1) year. These records shall show the line or regulated equipment tested or inspected, the reason for the test, the general conditions under which the test was made, the general result of the test and such corrections as were made when the test indicated need for same.

TF- 95-86
TARIFF LIBRARY
UTILITIES DIVISION

2. GENERAL REGULATIONS (Cont'd)

2.5 Disconnection of Service

2.5.1 Without Prior Notice

LINKPLUS services may be refused or disconnected without prior notice by INS for the following reasons: (C)

(A) In the event of a condition on the customer's premises determined by INS to be hazardous.

(B) In the event of customer's use in such a manner as to adversely affect INS' facilities or INS' service to others.

(C) In the event of tampering with facilities leased or owned by INS.

(D) In the event of unauthorized use.

Following the disconnection of service for any of these reasons, INS, or the local exchange utility acting as INS' agent, will notify the telephone customer that service was disconnected and why. The notice will include all reasons for the disconnection and will include a toll-free number where a customer can obtain additional information. Notice shall be deemed given upon deposit, postage prepaid, in the U.S. Mail to the customer's last known address.

2. GENERAL REGULATIONS (Cont'd)

2.5 Disconnection of Service (Cont'd)

2.5.2 With Prior Notice

Service can be disconnected with prior notice for the following reasons:

(A) In the event the customer is indebted to INS for the same type of telephone service previously furnished.

(B) In the event the customer supplied false or inaccurate information of a material nature in order to obtain telephone service.

(C) For failure of the customer or prospective customer to furnish service equipment, permits, certificates, rights of way necessary to obtain service or for the withdrawal of that same equipment or the termination of those permissions or rights, or for the failure of the customer or prospective customer to fulfill the contractual obligations imposed upon him or her as conditions of obtaining service by a contract filed with and subject to the regulatory authority of the Board.

(D) For failure of the customer to permit INS reasonable access to its facilities on the customer's premises.

(E) For nonpayment of a bill, where a reasonable attempt has been made at collection, except bills for merchandise purchased from INS, a different class of service or another customer which had been guaranteed.

TF - 93-366

TARIFF LIBRARY
UTILITIES DIVISION

(T)

2. GENERAL REGULATIONS (Cont'd)

2.5 Disconnection of Service (Cont'd)

2.5.2 With Prior Notice (Cont'd)

(F) For nonpayment of deposit as specified.

(G) Any other violation of the conditions governing the furnishing of service.

(H) For violation or noncompliance with INS' tariff rules on file with the Board, the requirements of any municipal ordinance, regulation or law pertaining to the service.

2.5.3 Notice

For disconnects under 2.5.2 preceding, written notice of a pending disconnect will be rendered at least five (5) days prior to the disconnection. The notice will include all reasons for the disconnect and the final date by which payment is to be made or specific action taken. The notice will include a toll-free number where a customer can obtain additional information. A notice of disconnect based upon non-payment will not be issued until the bill becomes delinquent. Notice shall be deemed given upon deposit, postage prepaid, in the U.S. Mail to the customer's last known address.

OCT 15 1993

TF - 93-3661

TARIFF LIBRARY
UTILITIES DIVISION

(T)

2. GENERAL REGULATIONS (Cont'd)

2.5 Disconnection of Service (Cont'd)

2.5.3 Notice (Cont'd)

(A) Unusual Circumstances

Disconnection may take place prior to the expiration of the five (5)-day unpaid bill notice period if the utility determines, from verifiable data, that usage during the five (5)-day notice period is so abnormally high that a risk of irreparable revenue loss is created.

(B) Time Restrictions on Disconnection

Except as provided in 2.5.1 preceding or in unusual credit circumstances or abnormal usage of service, no service will be disconnected on the day preceding or the day on which INS is closed. Service will not be disconnected on a weekend, holiday or after 2 p.m. unless service can be reconnected the same day.

2.5.4 Suspended Service

INS may suspend service when a customer is delinquent in payment. INS will issue the same notice at least five days in advance for suspension of service as is issued for termination of service. A customer whose account has been placed on suspension will still be able to receive messages in their voice message and/or (N)
fax mailbox, but will be unable to retrieve them. The (N)
customer will be assessed a reconnection charge set forth in 3.1 (C) following in order to continue service. If INS and the customer cannot resolve payment of the delinquent bill, service may be terminated without an additional notice, and without service being reestablished.

TF - 93-366

TARIFF LIBRARY
UTILITIES DIVISION

2. GENERAL REGULATIONS (Cont'd)

2.6 Engineering

2.6.1 Requirement for Good Engineering Practice

The facilities of INS shall be constructed, installed, maintained and operated in accordance with accepted good engineering practice in the communications industry to assure, as far as reasonably possible, continuity of service, uniformity in the quality of service furnished, and the safety of persons and property.

2.6.2 Adequacy of Service

(A) INS shall employ recognized engineering and administrative procedures to determine the adequacy of service being provided to the customer.

(B) Traffic studies shall be made and records maintained to determine that sufficient equipment and an adequate operating force are provided during the busy-season, busy-hour period.

(C) INS shall make reasonable provisions to meet emergencies resulting from failures of lighting or power service, sudden and prolonged increases in traffic, or from fire, storm, or acts of God. INS shall inform employees as to procedures to be followed in the event of an emergency in order to prevent or mitigate interruption or impairment of Link Plus Services. INS will provide fully (T) redundant backup sources for both power and data storage for the security of Voice Messaging Services.

TF - 93-366
TARIFF LIBRARY
UTILITIES DIVISION

2. GENERAL REGULATIONS (Cont'd)

2.6 Engineering (Cont'd)

2.6.2 Adequacy of Service (Cont'd)

(D) INS shall furnish and maintain adequate plant, equipment and facilities to provide satisfactory transmission and storage of communications.

2.6.3 Service Interruption

(A) INS shall make all reasonable efforts to prevent interruptions of service. When interruptions occur, INS shall reestablish service with the shortest possible delay.

(B) Arrangements shall be made to have personnel available to receive and record trouble reports twenty-four (24) hours daily and also to clear trouble of an emergency nature; at night, on holidays, on weekends, as well as during regular working hours.

(C) Whenever service must be interrupted during regular working hours for the purpose of working on the equipment, the work shall be done at a time which will cause the least inconvenience to the customers, and any who would be seriously affected by such interruption shall, so far as possible, be notified in advance.

Whenever a trouble report is received, a record will be made by INS and if repeated within a thirty (30)-day period by the same customer, this case shall be referred to a supervisor for permanent correction.

2. GENERAL REGULATIONS (Cont'd)

2.6 Engineering (Cont'd)

2.6.3 Service Interruption (Cont'd)

(C) (Cont'd)

When a customer's service is reported or is found to be out of order, it shall be restored as promptly as possible.

(D) The sole remedy for service interruptions, even if it is INS' fault, is the service interruption credit. In the event of an interruption to service which is not due to the negligence or willful act of the customer or the customer's premises equipment, a pro rata adjustment of the monthly charge for the service will be allowed. The out of service condition must have existed for a period of twenty-four hours or more, and INS must have discovered the interruption to exist or the customer must request the adjustment within thirty (30) days.

2.7 Safety

INS shall exercise reasonable care to reduce the hazards to which its employees, its customers or users and the general public may be subjected. INS shall give reasonable assistance to the Board in the investigation of the cause of accidents and in the determination of suitable means of preventing accidents. INS shall maintain a summary of all reportable accidents arising from its operations.

TF - 93-366
TARIFF LIBRAR
UTILITIES DIVISIO

 (T)

2. GENERAL REGULATIONS (Cont'd)

2.7 Safety (Cont'd)

INS shall adopt and execute a safety program, fitted to the size and type of its operations. At a minimum, the safety program will:

(1) require employees to use suitable tools and equipment in order that they may perform their work in a safe manner.

(2) instruct employees in safe methods of performing their work.

(3) instruct employees who, in the course of their work, are subject to the hazard of electrical shock, asphyxiation or drowning, in accepted methods of artificial respiration.

TARIFF LIBRARY
UTILITIES DIVISION

(T)

2. GENERAL REGULATIONS (Cont'd)

2.8 Held Applications

During such period of time as INS may not be able to supply initial Link Plus Services to prospective customers or upgrade existing customers within thirty (30) days after the date applicant desires service, INS shall keep a record showing the name and address of each applicant for service, the date of application, the date that service is desired, the class and rate of service applied for, together with the reason for the inability to provide new service or a higher grade of service to the applicant. (T)

2.9 Customer Information

(A) INS shall maintain up-to-date plans or records of its network together with such information as may be necessary to enable INS to advise prospective customers, and others entitled to the information, as to the facilities available for serving prospective customers in a serving area.

(B) INS shall notify customers affected by a change in rates or schedule classification in accordance with the Board's rules.

(C) INS shall post notices in a conspicuous place in each office of INS where applications for service are received, informing the public that copies of the rate schedules and rules relating to the services of INS, as filed with the Board, are available for inspection.

(D) INS shall furnish such additional information as the customer may reasonably request.

2. GENERAL REGULATIONS (Cont'd)

2.9 Customer Information (Cont'd)

(E) Employees responsible for the receiving of customer telephone calls and customer office visits shall be properly qualified and instructed in the screening and prompt handling of complaints to assure prompt reference of the complaint to the person or department capable of effective handling of the matter complained of and to obviate the necessity of the customer's preliminary repetition of the entire complaint to employees lacking in ability and authority to take appropriate action.

2.10 Customer Complaints

(A) Complaints concerning the charges, practices, facilities or service of INS shall be investigated promptly and thoroughly. INS shall keep a record of such complaint showing the name and address of the complainant, the date and nature of the complaint, its disposition, and all other pertinent facts dealing with the complaint, which will enable INS to review and analyze its procedure and actions. The records maintained by INS under this rule shall be available for inspection by the Board or its staff upon request.

(B) The customer must notify INS in writing of the nature and basis of any complaint. Should the complaint not be resolved by the payment date, the customer will, notwithstanding the continuing existence of the dispute, pay the billed amount. Within a reasonable period of time following notification, INS will provide written notice to the customer of the status of the complaint. The final step in the complaint hearing and review procedure shall be a filing for Board resolution of the issues.

TF - 93-366

TARIFF LIBRARY
UTILITIES DIVISION

(T)

2. GENERAL REGULATIONS (Cont'd)

2.10 Customer Complaints (Cont'd)

(B) (Cont'd)

(1) The General Manager of INS is the person authorized to receive, act upon and respond to communications from the Board and customers regarding complaints. The General Manager can be contacted by telephone at (515) 830-0110 or 1-800-469-5000. Written complaints should be mailed to INS' address listed on the bottom of this tariff. If INS does not resolve the customer's complaint, the customer may request assistance from the Utilities Division, Department of Commerce, Lucas State Office Building, Des Moines, Iowa 50319, (515) 281-5979.

2.11 Obligations of the Customer

2.11.1 Damages

(A) The customer shall be responsible for damages to INS' leased or owned facilities caused by the negligence or willful act of the customer or those using INS facilities through the customer. The customer or those using through the customer may not alter, physically modify or intrude upon, rearrange, disconnect, remove or attempt to repair, or permit others to alter, physically modify or intrude upon, rearrange, disconnect, remove or attempt to repair any INS facilities except upon written consent of INS.

TF - 93-366
TARIFF LIBRARY
UTILITIES DIVISION

2. GENERAL REGULATIONS (Cont'd)

2.11 Obligations of the Customer (Cont'd)

2.11.1 Damages (Cont'd)

(B) The customer's obligation to INS is the same whether the facilities involved are INS-owned facilities or are facilities leased by INS from another party. If INS incurs expenses due to the customer's actions which result in damage to or impairment of INS leased facilities, INS will pass through to the customer any and all expense which the owner of the facilities imposes on INS.

2. GENERAL REGULATIONS (Cont'd)

2.11 Obligations of the Customer (Cont'd)

2.11.2 Ownership of Facilities and Theft

Facilities utilized by INS to provide service under the provisions of this tariff shall remain the property of INS. Such facilities shall be returned to INS by the customer, whenever requested, within a reasonable period following the request in as good condition as reasonable wear will permit.

2.11.3 Availability for Testing

The services provided under this tariff shall be available to INS at times mutually agreed upon in order to permit INS to make tests and adjustments appropriate for maintaining the services in satisfactory operating condition. Such tests and adjustments shall be completed within a reasonable time. No credit will be allowed for any interruptions involved during such tests and adjustments.

2.11.4 Claims and Demands for Damages

The customer shall defend, indemnify and save harmless INS from and against any suits, claims, losses or damages, including punitive damages, attorneys' fees and court costs by the customer or third parties arising out of any act or omission of the customer in the course of using services provided under this tariff.

TF - 93-3661

TARIFF LIBRARY
UTILITIES DIVISION (T)

2. GENERAL REGULATIONS (Cont'd)

2.12 Payment Arrangements and Credit Allowances

2.12.1 Payment of Rates, Charges and Deposits

(A) INS will, in order to safeguard its interests, only require a customer which has a proven history of late payments to INS or does not have established credit, except for a customer which is a successor of a customer which has established credit and has no history of late payments to INS, to make a deposit prior to or at any time after the provision of a service to the customer to be held by INS as a guarantee of the payment of rates and charges. Such deposit may not exceed the actual or estimated rates and charges for the service for a two-month period. The fact that deposit has been made in no way relieves the customer from complying with INS' regulations as to the prompt payment of bills. At such time as the provision of the service to the customer is terminated, the amount of the deposit will be credited to the customer's account and any credit balance which may remain will be refunded. At the option of INS, such a deposit may be refunded or credited to the customer's account when the customer has established credit or after the customer has established a one-year prompt payment record at any time prior to the termination of the provision of the service to the customer. In the case of a cash deposit, the customer will receive interest at an interest rate of twelve percent (12%) per annum, (through October 31, 1993, and (C)
seven and one-half ((7.5%)) effective November 1, |
1993; per the Iowa Utility Board's order in DOCKET
NO. RMU-93-3 issued August 6, 1993) compounded (C)
annually, for the period beginning with the date of deposit to the date of refund or to the date that the deposit is applied to the customer's account or to the date the customer's bill becomes permanently delinquent.

TF - 93-366

TARIFF LIBRARY
UTILITIES DIVISION

 (T)

2. GENERAL REGULATIONS (Cont'd)

2.12 Payment Arrangements and Credit Allowances (Cont'd)

2.12.1 Payment of Rates, Charges and Deposits (Cont'd)

(A) (Cont'd)

The date of refund is that date on which the refund or the notice of deposit return is forwarded to the customer's last known address. The date a customer's bill becomes permanently delinquent, relative to an account treated as an uncollectible account, is the most recent date the account became delinquent.

(1) INS shall keep records to show:

i. the name and address of each depositor.

ii. the amount and date of the deposit.

iii. each transaction concerning the deposit.

(2) INS shall issue a receipt of deposit to each customer from whom a deposit is received, and shall provide means whereby a depositor may establish their claim if their receipt is lost. (T)

2. GENERAL REGULATIONS (Cont'd)

2.12 Payment Arrangements and Credit Allowances (Cont'd)

2.12.1 Payment of Rates, Charges and Deposits (Cont'd)

(A) (Cont'd)

(3) The deposit shall be refunded after not more than twelve (12) consecutive months of prompt payment (which may be eleven (11) timely payments and one (1) automatic forgiveness of late payment). The account shall be reviewed after twelve (12) months of service and, if the deposit is retained, it shall again be reviewed at the end of INS' accounting year or on the anniversary date of the account.

(4) INS shall make a reasonable effort to return each unclaimed deposit and accrued interest after the termination of the services for which the deposit was made. INS shall maintain a record of deposit information for at least two (2) years or until such time as the deposit, together with accrued interest, escheats to the state pursuant to Iowa Code Section 556.4, at which time the record and deposit, together with accrued interest less any lawful deductions, shall be sent to the State Treasurer pursuant to Iowa Code Section 556.11.

2. GENERAL REGULATIONS (Cont'd)

2.12 Payment Arrangements and Credit Allowances (Cont'd)

2.12.1 Payment of Rates, Charges and Deposits (Cont'd)

(A) (Cont'd)

(5) Unclaimed deposits, together with accrued interest, shall be credited to an appropriate account.

(6) A new or additional deposit may be required when a deposit has been refunded or is found to be inadequate by virtue of increased service usage or non-payment. Written notice shall be mailed advising the customer of any new additional deposit requirement. The customer shall have no less than twelve (12) days from the date of mailing to comply. The new or additional deposit shall be payable at the INS business office. An appropriate receipt shall be provided. No written notice is required to be given of a deposit required as a prerequisite for commencing initial service. If usage is abnormally high, INS may require a new (T) deposit or an increase in deposit to guarantee payment of bills. A customer who fails to comply with the deposit requirements may be disconnected. Should a deposit be credited to the customer's account, as indicated above, no interest will accrue on the deposit from the date such deposit is credited to the customer's account.

TF - 93-366
TARIFF LIBRARY
UTILITIES DIVISION

2. GENERAL REGULATIONS (Cont'd)

2.12 Payment Arrangements and Credit Allowances (Cont'd)

2.12.1 Payment of Rates, Charges and Deposits (Cont'd)

(B) Rules on billing periods, bill format, bill issuance, timely payment, late payment charge, payment and collection efforts, and the resolution of billing disputes shall be established by INS or INS' billing agent and documented in billing and collections procedures.

2.12.2 Rates for Fractional Periods (N)

(A) For the purpose of administering this regulation with respect to determining charges for a fractional part of a month, every month is considered to have thirty days.

(B) The charges for a fractional part of a month will be a proportionate part of the monthly recurring rate based on the actual number of days the service is provided.

2.12.3 Cancellation of Application for Service

(A) When an application for service is cancelled by the applicant prior to the start of installation of facilities, no charge applies.

(B) When installation of facilities for Link Plus Voice Messaging Service has been started prior to the cancellation, installation charges apply.

(C) When installation of facilities for Link Plus Faxmail, Link Plus Broadcast Fax or Link Plus Fax on Demand Service has been started prior to the cancellation, the initial set-up charge will apply. (N)

TF - 93-366

TARIFF LIBRARY
UTILITIES DIVISION (T)

2. GENERAL REGULATIONS (Cont'd)

2.13 Application for Service

An application for Link Plus Services must be completed by a (T)
customer service representative in order for the customer to
receive any INS voice messaging or fax service. The customer (N)
must provide their name, billing address, and daytime phone (T)
number in order to receive Link Plus Services. Upon receipt
of the installation charge described at 3.1 (A) following or
other guarantee of payment, the Link Plus representative will
assign the customer a mailbox number and start the service
order process.

TF- 95-86
TARIFF LIBRARY
UTILITIES DIVISION

IOWA TARIFF NO. 3
LINKPLUS SERVICES

Iowa Network Services, Inc. 2nd Revised Page 38
Filed with the Board Cancels 1st Revised Page 38

2. GENERAL REGULATIONS (Cont'd)

2.14 Interutility Rates to INS Independent Companies

The following interutility rates for INS Link Plus Voice Messaging Services are offered to those independent telephone companies that comprise the INS network, for their own use or for resale to their end user customers. All rules, regulations, terms, and conditions described in this tariff apply to services provided to the independent telephone companies except that the services are provided at the same interutility rates INS imputes for its own corporate use.

(A) Nonrecurring Charges

Installation Charge	$ 5.00	
Change Charge	5.00	
Reconnection Charge	5.00	

(B) Link Plus Packages

Link Plus - Economy, per month	$ 3.00	
Link Plus - Economy Advantage, per month	4.00	
Link Plus - Basic, per month	5.00	
Link Plus - Enhanced, per month	7.00	
Link Plus - Premier Package	10.00	(N)

(C) Link Plus Chargeable Optional Features

Additional Travel Service Access in excess of allowance, per minute	$ .25	
Audiotext Menu Mailbox, per month	7.00	
Message Delivery, per Mailbox, per month	12.00	(N)

(D) Link Plus Information Only Service

Mega Information Only, per month	$10.00
Enhanced Information Only, per month	7.00
Economy Information Only, per month	3.00

Issued: March 9, 1995 Effective: APR 9 1995

By: William P. Bagley
General Manager/Chief Executive Officer
4201 Corporate Drive
West Des Moines, IA 50266-5906

TF - 93-366

TARIFF LIBRARY
UTILITIES DIVISION

IOWA TARIFF NO. 3
LINK PLUS SERVICES (T)

Iowa Network Services, Inc.
Filed with the Board

1st Revised Page 38.1
Cancels Original Page 38.1

2. GENERAL REGULATIONS (Cont'd)

2.14 Interutility Rates to INS Independent Companies (Cont'd)

(E) Link Plus Toll Free Service (T)

Toll Free Basic, per month	$ 5.00	(T)
Toll Free Enhanced, per month	8.00	(T)
Additional customer and caller connect time in excess of allowance, per minute	.25	(T)

Issued: September 9, 1993 Effective: OCT 15 1993

By: William P. Bagley
General Manager
4201 Corporate Drive
West Des Moines, IA 50266-5906

TF - 93 - 3661

TARIFF LIBRARY
UTILITIES DIVISION

(T)

2. GENERAL REGULATIONS (Cont'd)

2.15 Special Arrangements (N)

The arrangements, utilized in the furnishing of the services and facilities provided at the rates and charges specified in this Tariff, are provided in accordance with industry standards.

For special arrangements not specifically covered in this Tariff, charges based upon the estimated cost of furnishing such arrangements apply.

The estimated cost consists of an estimate of the following items to the extent that they are applicable:

(A) Cost of maintenance.

(B) Cost of operation.

(C) Depreciation on the estimated installed cost of any facilities provided, based on the anticipated useful service life of the facilities with an appropriate allowance for the estimated salvage.

(D) Administration, taxes, and uncollectible revenue on the basis of reasonable average charges for these items.

(E) Any other specific items of expense associated with the particular situation as deemed necessary by INS. (N)

TF - 93-366

TARIFF LIBRARY
UTILITIES DIVISION

2. GENERAL REGULATIONS (Cont'd)

2.15 Special Arrangements (Cont'd) (N)

(F) A reasonable amount, computed on the estimated installed cost of any facilities provided, for a return on the investment, and for contingencies.

Estimated installed cost as mentioned in (C) and (F) preceding includes cost of materials specifically provided or used plus the estimated cost of installing, including engineering, labor, supervision, transportation, rights-of-way, and any other items which are chargeable to the capital accounts. (N)

OCT 15 1993

TARIFF LIBRARY
UTILITIES DIVISION (T)

3. ORDERING OPTIONS

The customer may order INS Link Plus Services by coming into the INS business office, or by calling INS at 1-800-469-5000. A service order is generated to provide the customer Link Plus Services as follows: (T) (T)

- Link Plus Voice Messaging Services as set forth in Section 4 following.
- Link Plus Information Only Mailbox Services as set forth in Section 5 following.
- Link Plus Toll Free Service as set forth in Section 6 following.
- Link Plus 800 Service as set forth in Section 7 following.
- Link Plus for Cellular service as set forth in Section 8 following.
- Link Plus Faxmail as set forth in Section 9 following. (N)
- Link Plus Broadcast Fax as set forth in Section 10 following. (N)
- Link Plus Fax On Demand as set forth is Section 11 following. (N)

When placing an order for Link Plus Services, the customer shall provide, at a minimum, customer name, billing address, and daytime phone number. (T)

3. ORDERING OPTIONS (Cont'd)

3.1 Rates and Charges Associated with Voice Messaging Service Ordering

(A) Installation Charge

When the customer orders service, the following installation charge must be received by INS prior to the selection and assignment of the mailbox and establishment of service. When a customer is disconnected for nonpayment of services and wishes to reestablish service with the same mailbox number or with a different mailbox number, the installation charge will apply.

Installation Charge, per account	$15.00	(T)

(B) Change Charge

When the customer orders a change in service, including but not limited to, change in mailbox number, addition of mailboxes, change in package option, a change charge will apply at the rate indicated below. A charge will not be assessed for any administrative change such as to billing name or address.

Change Charge, per occurrence	$ 5.00	(T)

(C) Reconnection Charge

When a customer account is placed on suspension for nonpayment of charges as set forth in 2.5.4 above, the following charge will apply to reactivate the customer passcode and reestablish service.

Reconnection Charge, per occurrence	$ 5.00	(T)

TF- 95-86

TARIFF LIBRARY
UTILITIES DIVISION

4. LINK PLUS VOICE MESSAGING SERVICE

4.1 General

Link Plus voice messaging service can receive messages and information from callers that does not require two-way communication. The service will answer calls with a personalized greeting recorded by the customer, then receive and store the callers' messages for review by the customer at a later time. Customers may retrieve messages left in their confidential voice message mailbox from any tone signaling telephone.

4.2 Basic Service Features

The following service features are available with all Link Plus packages except the Information Only Mailbox, described in 5. following: (T)

(A) Availability

Link Plus voice messaging is available 24 hours per day, seven days per week.

(B) Personal Security Code

The customer must assign a personal 4-digit passcode to the mailbox that will be required to retrieve messages left in the mailbox.

(C) Personalized Greeting

The customer records a personal voice greeting of up to two minutes in length to answer all incoming calls. The greeting can be changed at any time from any touch tone phone.

TF - 93-366

TARIFF LIBRARY
UTILITIES DIVISION

4. LINK PLUS VOICE MESSAGING SERVICE (Cont'd)

4.2 Basic Service Features (Cont'd)

(D) System Prompts and User Commands

Link Plus voice messaging prompts the customer with an on-line tutorial which instructs the customer which key to press to access specific menu functions. All of the commands can be accessed with one key stroke on a touch tone phone.

INS may at any time change the customer interface such as the recorded prompts and directions without prior notice to the customer. INS will notify customers of any material change in the structure of the service, including the length of time for leaving messages, the number of messages that can be left, new service options or capability.

(E) Date and Time Stamp

Each message left in a customer's mailbox is stamped with the time and date it was received. The system provides this information to the customer when the message is retrieved.

(F) Time Saver

When the customer calls into the Link Plus system to retrieve messages and there is an unplayed message waiting, the system will indicate this by answering immediately - no ringing will be heard. If there are no unplayed messages, the customer will hear the system ring once, and may then hang up if he does not want to access other Link Plus options.

TARIFF LIBRARY
UTILITIES DIVISION (T)

4. LINK PLUS VOICE MESSAGING SERVICE (Cont'd)

4.2 Basic Service Features (Cont'd)

(G) Ten Day Save

Messages that have been played and messages designated as 'kept' by the customer will be retained up to ten days on the system unless discarded prior to this time by the customer. Unplayed or unheard messages will be retained for twenty-one (21) days before automatic deletion.

4.3 Optional Service Features

The following service features are available with certain Link Plus packages:

(A) Personalized Messages Send

Certain Link Plus packages allow a customer to send a message from their mailbox to one or more other mailboxes on the system and attach the customer's name to the message.

(B) Message Give or Redirection

When a message is received in the customer's mailbox (T)
they can give a copy of it to one or more other (T)
mailboxes and record comments to accompany the message if desired.

(C) Message Review

When recording a message for another mailbox user, the customer can review their recording to append to it or discard it and start again.

TARIFF LIBRARY
UTILITIES DIVISION

(T)

4. LINK PLUS VOICE MESSAGING SERVICE (Cont'd)

4.3 Optional Service Features (Cont'd)

(D) Confirmation of Delivery

When the customer sends a message to other mailbox users it can be marked for receipt. The Link Plus system will tell the customer who has received the message and which users have not played it.

(E) Distribution Lists

This feature allows the customer to record a message once and send it to up to 200 mailboxes simultaneously. Each mailbox can establish nine (9) personal distribution lists.

(F) Travel Services Access

Certain Link Plus packages allow the customer a specified number of minutes of toll free access to its mailbox for use when calling from out of the Des Moines local calling area. Travel access to the mailbox that exceeds the package allowances are billed at a flat rate per additional minute, indicated at 4.4.2 (A) following.

TF- 95-86
TARIFF LIBRARY
UTILITIES DIVISION

4. LINK PLUS VOICE MESSAGING SERVICE (Cont'd)

4.3 Optional Service Features (Cont'd)

(G) Audiotext Menu Mailbox

This optional feature allows the customer to establish a greeting which will prompt the caller to indicate which of multiple mailboxes to access for further instructions or to leave a message by pressing a number on their touchtone phone. Each audiotext mailbox allows up to nine menu options for branching to either additional audiotext, information only or basic mailboxes. Each audiotext command message can be up to seven and one-half minutes in length.

(H) Message Delivery (N)

This optional feature allows customers to have their voice mailbox dial a pre determined telephone number and notify the customer of a new message. The customer enters his or her personal pass code and automatically hears the new message. (N)

TARIFF LIBRARY
UTILITIES DIVISION (T)

4. LINK PLUS VOICE MESSAGING SERVICE (Cont'd)

4.4 Rates and Charges

The following packages and Chargeable Optional Features apply to Link Plus Voice Messaging services.

4.4.1 Link Plus Packages

(A) Link Plus - Economy

Per Mailbox, per month $5.95 (T)

10 Unplayed and kept messages allowed

Keep/Discard Functions Only

(B) Link Plus - Economy Advantage

Per Mailbox, per month $6.95 (T)

10 Unplayed and kept messages allowed

Keep/Discard/Make/Give/Answer Functions

(C) Link Plus - Basic

Per Mailbox, per month $9.95 (T)

20 Unplayed and kept messages allowed

Keep/Discard/Make/Give/Answer Functions

10 Minutes of 800 Travel Service Access allowed

TF- 95-86

TARIFF LIBRARY
UTILITIES DIVISION

IOWA TARIFF NO. 3
LINKPLUS SERVICES

Iowa Network Services, Inc. 2nd Revised Page 47
Filed with the Board Cancels 1st Revised Page 47

4. LINK PLUS VOICE MESSAGING SERVICE (Cont'd)

4.4 Rates and Charges (Cont'd)

4.4.1 Link Plus Packages

(D) Link Plus - Enhanced

Per Mailbox, per month $13.95

40 Unplayed and kept messages allowed

Keep/Discard/Make/Give/Answer Functions

9 Distribution Lists, maximum 200 mailboxes per list

15 Minutes of 800 Travel Service Access allowed

(E) Link Plus - Premier Package (N)

Per Mailbox, per month $19.95

73 Unplayed and kept messages allowed

Keep/Discard/Make/Give/Answer Functions

9 Distribution Lists, maximum 200 mailboxes per list

15 Minutes of 800 Travel Service Access allowed (N)

Certain regulations formerly on this page now appear on page 47.1.

Issued: March 9, 1995 Effective: APR 9 1995

By: William P. Bagley
General Manager/Chief Executive Officer
4201 Corporate Drive
West Des Moines, IA 50266-5906

TF- 95-86
TARIFF LIBRARY
UTILITIES DIVISION

IOWA TARIFF NO. 3
LINKPLUS SERVICES

Iowa Network Services, Inc. Original Page 47.1
Filed with the Board

4. LINK PLUS VOICE MESSAGING SERVICE (Cont'd)

4.4 Rates and Charges (Cont'd)

4.4.2 Chargeable Optional Features

(A) Additional Travel Service Access

Per minute in excess of allowance	$ .25	

(B) Audiotext Menu Mailbox

Per Mailbox, per month	$13.95	

(C) Message Delivery (N)

Per Mailbox, per month	$18.95	(N)

Certain regulations on this page formerly appeared on page 47.

Issued: March 9, 1995 Effective: APR 9 1995

By: William P. Bagley
General Manager/Chief Executive Officer
4201 Corporate Drive
West Des Moines, IA 50266-5906

TF - 93-366

TARIFF LIBRARY
UTILITIES DIVISION

(T)

5. LINK PLUS INFORMATION ONLY SERVICE

5.1 General

An information only service is available which allows the customer to establish an out-going message to greet callers. This mailbox cannot receive caller messages, nor can the customer send messages to any other mailbox owner. The following packages are available:

(A) Mega Information Only

This option allows the customer to establish a seven and one-half minute out-going message.

(B) Enhanced Information Only

This option allows the customer to establish a four minute out-going message.

(C) Economy Information Only

This option allows the customer to establish a two minute out-going message.

5.2 Rates and Charges

The following rates apply to Link Plus Information Only Mailbox packages:

(A)	Mega Information Only Per Mailbox, per month	$24.95	(T)
(B)	Enhanced Information Only Per Mailbox, per month	$13.95	(T)
(C)	Economy Information Only Per Mailbox, per month	$ 5.95	(T)

TARIFF LIBRARY
UTILITIES DIVISION (T)

6. LINK PLUS TOLL FREE SERVICE

6.1 General

Link Plus services can be ordered with a flat amount of toll free or travel services access for callers. When the customer orders Link Plus Toll Free service then all calls to the INS provided 800 number terminate in the Link Plus system and the system prompts the caller to designate the individual mailbox number they wish to access. Calls placed outside of the customer's local calling area are terminated at no charge to the calling party. All basic and optional features of the Link Plus Voice Messaging Service are available with Link Plus 800 except for Customer Page when Message Waiting.

6.2 Rates and Charges

The following package options are available with Link Plus Toll Free service:

(A) Toll Free Basic

Per Mailbox, per month	$9.95	(T)
Allows 30 Minutes total customer and caller connect time		
Each additional minute	.25	(T)

(B) Toll Free Enhanced

Per Mailbox, per month	$14.95	(T)
Allows 45 Minutes total customer and caller connect time		
Each additional minute	.25	(T)

TF - 93-366

TARIFF LIBRARY
UTILITIES DIVISION (T)

7. LINK PLUS 800 SERVICE

7.1 General

Link Plus 800 Service allows the customer to order INS 800 service under Iowa Network Iowa Tariff No. 2 and allow calls placed outside of the customer's local calling area to terminate directly into a Link Plus Voice Messaging Service mailbox with no charge to the caller and without first going through the Link Plus attendant message. The customer may select any of the Link Plus or Information Only packages set forth in Sections 4.4 and 5.2, and is charged the associated rate in addition to the 800 usage charges specified in Iowa Network Iowa Tariff No. 2.

TF - 93-366

IOWA TARIFF NO. 3
LINK PLUS SERVICES

TARIFF LIBRARY
UTILITIES DIVISION

(T)

Iowa Network Services, Inc.
Filed with the Board

1st Revised Page 51
Cancels 1st Corrected Page 51

8. LINK PLUS FOR CELLULAR

Link Plus services may be provided in blocks of mailboxes to certain non-regulated utilities such as cellular providers at the following interutility rate: (T)

Link Plus - Cellular

Per Mailbox, per month	$2.50	(T)

20 Unplayed and kept messages allowed

Keep/Discard/Make/Give/Answer Functions

No Travel Services Access allowed

Issued: September 9, 1993 Effective:

OCT 15 1993

By: William P. Bagley
General Manager
4201 Corporate Drive
West Des Moines, IA 50266-5906

TARIFF LIBRARY
UTILITIES DIVISION

(T)

9. LINK PLUS FAXMAIL (N)

9.1 General

Link Plus Faxmail service is an enhanced fax store-and-forward messaging service designed for the business person who is highly mobile and wishes to maintain contact with the home office, clients and vendors via hard-copy messages.

9.2 Basic Service Features

Link Plus Faxmail service provides the customer easy access to waiting documents from wherever the customer's location, direct document delivery to the fax machine of the customer's choice, delivery delay for convenience, and confidentiality. Additional features include message-waiting notification, guaranteed delivery and message forwarding.

Customers are assigned an individual, unique fax number to which callers can transmit their fax documents. Incoming documents are received by the customer's fax mailbox. They remain stored in the customer's pass-code protected mailbox until requested by the customer. To access the fax mailbox, the customer simply dials an 800 number and, from any touch tone telephone, follows the instructions to receive, send, forward, save or delete the fax documents stored in the mailbox. (N)

TF - 93-366

TARIFF LIBRARY
UTILITIES DIVISION

(T)

9. LINK PLUS FAXMAIL (Cont'd)

9.3 Optional Service Features (N)

The following service features are available:

(A) Pager Notification

Numeric or Alphanumeric Pager Notification alerts the customer to all incoming messages. Alphanumeric paging devices and terminals allow the customer to create a wide variety of highly customized messages. (This is not a regulated service.)

(B) Auto Forwarding

With Auto Forwarding, incoming fax documents can be automatically forwarded to the fax machine most convenient to the customer.

(C) Multiple Retries

In the event of busy signals, the Multiple Retry feature will continue trying to deliver the customer's documents.

9.4 Rates and Charges

Initial set-up	$10.00
Monthly	19.95
Usage, per minute	.45
Message notification, per message	.20 (N)

TF- 95-86

TARIFF LIBRARY
UTILITIES DIVISION

10. LINK PLUS BROADCAST FAX

10.1 General

Link Plus Broadcast Fax service allows customers the convenience of immediate, automatic and simultaneous distribution of a single document to multiple destinations via facsimile transmission.

10.2 Basic Service Features

Up to 999 customer developed fax broadcast lists are stored on the system. These lists can contain hundreds of fax numbers, names and other corresponding information. The destinations of the faxed documents are based on the broadcast list(s) selected by the customer.

Documents are sent by the customer dialing their fax mailbox, selecting the desired broadcast list and scanning the document to be sent from their fax machine. The documents will automatically be scheduled for delivery at the time specified by the customer. For documents which are unable to be delivered, a non-delivery notification report will be generated and delivered to the customer's fax mailbox.

10.3 Optional Service Features

The following feature is available:

(A) Delivery Reports

Several Delivery Report options are available. Customers can receive a report which identifies all the successfully delivered destinations, or receive a report which contains a listing of only the unsuccessful destinations.

10.4 One-Time Broadcast Fax Service (N)

This service is available on a per-event basis to customers who request INS to distribute their Fax message. (N)

TF- 95-86
TARIFF LIBRARY
UTILITIES DIVISION

IOWA TARIFF NO. 3
LINKPLUS SERVICES

Iowa Network Services, Inc.
Filed with the Board

1st Revised Page 55
Cancels Original Page 55

10. LINK PLUS BROADCAST FAX (Cont'd)

10.5 Rates and Charges (T)

Initial set-up	$25.00	
Monthly, per mailbox	19.95	
Distribution, per minute or fraction thereof:		
Day 8:00am to 5:59pm, Monday through Friday	.50	(T)
Evening 6:00pm to 10:59pm, Monday through Friday		(T)
5:00pm to 10:59pm, Sunday	.40	(T)
Night and Weekend 11:00pm to 7:59am Sunday through Friday,		(T)
all day Saturday, and 8:00am to 4:59pm		(T)
on Sunday	.30	

One-Time Fax Broadcast (N)

List Set Up Fee

Manual Entry:		
0 - 20 names	$10.00	
Each additional name	0.40	
Entry from customer provided computer disk	15.00	
Broadcast Fee, per page:		
Day 8:00am to 5:59pm, Monday through Friday	.50	
Evening 6:00pm to 10:59pm, Monday through Friday		
5:00pm to 10:59pm, Sunday	.40	
Night and Weekend 11:00pm to 7:59am Sunday through Friday,		
all day Saturday, and 8:00am to 4:59pm		
on Sunday	.30	(N)

Issued: March 9, 1995 Effective: APR 9 1995

By: William P. Bagley
General Manager/Chief Executive Officer
4201 Corporate Drive
West Des Moines, IA 50266-5906

TF - 93-366

TARIFF LIBRARY
UTILITIES DIVISION

11. LINK PLUS FAX ON DEMAND (N)

11.1 General

Link Plus Fax on Demand is an interactive fax service. It provides the customer access to a data base which contains stored fax information unique to the customer's service.

11.2 Basic Service Features

Specific information, designated by the customer, is delivered to the customer's fax mailbox each day. This could include, but is not limited to, the latest news, headline stories, newspaper articles, trade journals, news wires and stock quotes. This information can be retrieved by the customer by simply calling into their fax mailbox.

11.3 Rates and Charges

Initial set-up	$40.00
Monthly	19.95
Usage, per minute or fraction thereof	.45 (N)

TF - 93-366

TARIFF LIBRARY
UTILITIES DIVISION

(T)

12. PROMOTIONS AND DISCOUNTS (T)

INS may from time to time offer special promotions and discounts to Link Plus Service customers in order to attract customers, increase usage, or to provide additional billing options to INS customers. Promotions may be in the form of a coupon or a waiver of the installation or change charges. Discounts may be applied on certain packages for prepayment of services. (T)

Additionally, INS may offer, at its sole discretion, Link Plus Services at no charge to certain non-profit organizations as a community service and for the promotional benefits of the service.

Exhibit 55

INS Opening Brief,
INS v. Qwest Corp., No. 02-40156
(S.D. Iowa Aug. 11, 2004)

FILED
DES MOINES, IOWA
2004 AUG 11 PM 4: 32
CLERK U.S. DISTRICT COURT
SOUTHERN DISTRICT OF IOWA

UNITED STATES DISTRICT COURT
FOR THE SOUTHERN DISTRICT OF IOWA
CENTRAL DIVISION

IOWA NETWORK SERVICES, INC.	:	
Plaintiff,	:	
v.	:	Civil No. 4:02-CV-40156
QWEST CORPORATION	:	Judge James E. Gritzner
	:	Jury Trial Requested
Defendant	:	

OPENING BRIEF OF PLAINTIFF IOWA NETWORK SERVICES, INC. IN OPPOSITION TO MOTION OF QWEST CORPORATION FOR SUMMARY JUDGMENT

MCGUIREWOODS, LLP

James U. Troup
1050 Connecticut Avenue, N.W., Suite 1200
Washington, DC 20036
Telephone: (202) 857-1702
Facsimile: (202) 857-1737
jtroup@mcguirewoods.com

James H. Lister
1750 Tysons Boulevard, Suite 1800
McLean, VA 22102
Telephone: (703) 712-5063
Facsimile: (703) 712 5050
jlister@mcguirewoods.com

SULLIVAN & WARD, P.C.

Lawrence P. McLellan
801 Grand Avenue, Suite 3500
Des Moines, IA 50309-2719
Telephone: (515) 247-4715
Facsimile: (515) 244-3599
lmclellan@sullivan-ward.com

ATTORNEYS FOR PLAINTIFF IOWA NETWORK SERVICES, INC.

54

TABLE OF CONTENTS

INTRODUCTION 1

SUMMARY OF ARGUMENT 2

FACTS, REGULATORY BACKGROUND AND PROCEDURAL HISTORY 3

A. Facts 3

B. Procedural History 6

C. Regulatory Classification of INS 6

ARGUMENT 8

A. Summary Judgment Standard Under Rule 56 8

B. The Tariffs Rendered Qwest Responsible for Payment 8

C. The Reciprocal Compensation Rules Do Not Bar INS' Claims Against Qwest 9

1. The Reciprocal Compensation Rules Govern the Charges of Originating and Terminating Carriers, Not Intermediary Carriers 10

2. Additionally, Qwest is Acting as an Interexchange Carrier and so even Carriers that are Subject to the Reciprocal Compensation Rules May Impose Access Charges 17

3 Qwest Cites the 1996 FCC Order Out-Of-Context 23

4. Summary 24

D. The FCC had Jurisdiction to Accept INS' Tariff Amendments Governing Intrestate Wireless-Originated Traffic 25

E. Application of the Filed Tariff Doctrine and the "Deemed Lawful" Status of the FCC Tariff 27

F. Unjust Enrichment 30

CONCLUSION 33

INTRODUCTION

Plaintiff Iowa Network Services, Inc. ("INS"), by counsel, respectfully opposes the motion for summary judgment being filed by Defendant Qwest Corporation. Pursuant to the Court's scheduling order (Case Doc. 47), this opening brief is filed simultaneously with Qwest's opening brief. The parties will also simultaneously file response briefs and then reply briefs.

The purpose of the parties' briefing (and Qwest's motion) was discussed extensively before Magistrate Judge Bremer at the hearing on July 6, 2004 on Qwest's motion to consolidate. After Qwest expressed its view that it was entitled to judgment as a matter of law, which INS contested, Magistrate Judge Bremer in her order denying consolidation set briefing deadlines for a motion to be filed by Qwest addressing "threshold legal issues." Case Doc. 47. During the hearing, Judge Bremer indicated that the purpose of this exercise should be to sort through the many legal issues with the objective of framing, simplifying and/or in narrowing those issues prior to commencement of discovery and limiting the amount of discovery necessary on remaining issues. Qwest has chosen to proceed under Rule 56 rather than Rule 12, although because of how Judge Bremer framed the purpose of this briefing, no discovery has taken place.

INS demonstrates below that the various legal issues discussed by the parties favor INS rather than Qwest, that the case requires further factual development, and that the summary judgment motion should therefore be denied in its entirety. Further, in order to achieve Judge Bremer's objective of framing, simplifying and/or narrowing the issues, INS respectfully requests that the Court enter an order that sets forth its ruling on each legal issue for the purpose of governing all further proceedings in this case. See F.R.Civ.P. 16(c) and 56 (d).

SUMMARY OF ARGUMENT

The FCC has held that its reciprocal compensation rules do not govern the charges of intermediary carriers such as INS. As neither the reciprocal compensation rules nor any other rules displace pre-1996 Act rules; intermediary carriers may continue to collect charges as they did prior to the 1996 Act. Additionally, the separate interexchange carrier ("IXC") exception to the intraMTA rule is not limited to IXCs acting in a retail capacity, as the Iowa Utilities Board thought, but includes IXCs such as Qwest that carry intraMTA wireless calls on behalf of other carriers. Thus even without considering the Filed Tariff Doctrine and the deemed lawful status of the INS federal tariff, INS' tariffs can and should be enforced pursuant to their terms. Moreover, once the Filed Tariff Doctrine and the statutory provision treating the INS federal tariff as "deemed lawful" are considered, it becomes clear that Qwest's regulatory arguments are simply an attempt to escape the principle that INS' filed federal and state tariffs completely and exclusively govern charges and terms for the service being provided.

Additionally, the inequity of Qwest's position is extreme. Qwest takes the position that INS' exclusive remedy is against the wireless carriers who originate the calls and hire Qwest. Yet Qwest mixes (commingles) the calls it gets from various wireless carriers and other sources before delivering them to INS, such that INS cannot measure the traffic from each individual wireless carrier in order to bill that wireless carrier. Nothing in the Communications Act or the FCC's reciprocal compensation rules justifies Qwest's unreasonable position. Further, the Eighth Circuit in remanding this case rejected Qwest's argument (which the IUB and this Court had agreed with) that Qwest acted as an involuntary intermediary in delivering the wireless calls to INS. Thus Qwest voluntarily chose to deliver commingled calls to INS knowing that INS expected payment from Qwest.

For these reasons and the additional reasons stated below, Qwest cannot show that it is entitled to a judgment of any kind. This long-delayed case should move forward with discovery. If any conclusion can be reached at this stage, it is that INS' tariffs govern the traffic at issue.

FACTS, REGULATORY BACKGROUND, AND PROCEDURAL HISTORY

A. FACTS

Wireless carriers (also known as Commercial Mobile Radio Service carriers or "CMRS" carriers) deliver telephone calls originated by their subscribers to Qwest, which mixes the calls with other calls and delivers them to INS. See Sherlock Declaration ("Sherlock Dec."), ¶ 1.[1] INS in turn delivers the calls to rural local exchange carriers (local telephone companies) directly serving the called parties. Sherlock Dec., ¶ 3. Qwest submitted written orders to INS called "Access Service Requests" to establish the "trunks" it uses to deliver the calls to INS. Sherlock Dec., ¶ 6; Qwest Answer, ¶ 16 (Case Doc. 34). The calls at issue in this case are those that follow this calling path and begin and end within the Major Trading Area No. 32 Des Moines-Quad Cities (the "MTA"), which encompasses almost the entire state of Iowa plus portions of five other states. See Sherlock Dec., ¶ 4[2] Thus the calls at issue are both intrastate and interstate, but can be referred to as intraMTA wireless-originated calls. Sherlock Dec., ¶5. The regulatory background including the FCC's adoption of the Major Trading Area and other reciprocal compensation rules, 47 CFR § 51.701 et seq., in its 1996 Local Competition Order is already known to the Court from its prior ruling and will not be repeated. See Implementation of the Local Competition Provisions in the Telecommunications Act of 1996, Interconnection

---

[1] Declarations from INS employees Robert J. Sherlock and Dennis M. Creveling are in the process of being finalized and will be filed with this brief or immediately thereafter as Exhibits 1 and 2.

[2] The five other states are: South Dakota, Nebraska, Missouri, Illinois, and Wisconsin. See 47 CFR CFR § 24.202(a), incorporating the Rand McNally 1992 Commercial Atlas & Marketing Guide, 123rd Edition, which has a MTA map at pages 38-39.

Between Local Exchange Carriers and Commercial Mobile Radio Service Providers, First Report and Order, 11 FCC.Rcd. 15499 (1996) ("1996 Local Competition Order").

In delivering calls to INS, Qwest mixes calls from multiple wireless carriers and other sources onto the common "trunks" requested from INS. Sherlock Dec., ¶ 2. Therefore, the identity of the wireless or other carrier originating each call cannot readily be determined by INS. Sherlock Dec., ¶ 8. This hinders efforts by INS to bill the wireless carriers directly as Qwest would like INS to do. Id.

For numerous years from the mid-1980s to April 1999, Qwest paid access charges to INS for carrying the intraMTA calls at issue. Creveling Declaration ("Creveling Dec."), ¶ 1. During those years Qwest paid for intrastate intraMTA calls pursuant to the terms of the INS state tariff, excerpts of which are supplied as Complaint Exhibit C. Qwest paid for interstate intraMTA calls pursuant to the terms of the original INS federal tariff, excerpts of which are supplied as Complaint Exhibit A. Creveling Dec., ¶ 1.

The INS state tariff (and the original INS federal tariff) provide that a customer who submits an order for service is liable. Complaint, Ex. A (page 69); Ex. C (page 117). As noted, Qwest submitted Access Service Requests to establish the trunks over which Qwest delivered and continues to deliver intraMTA wireless-originated calls. Sherlock Dec., ¶¶ 6, 11, 12.

In April, 1999, Qwest ceased paying for intraMTA wireless-originated calls. Sherlock Dec., ¶ 9. Qwest took the position that the calls were "local" under the intraMTA rule (47 C.F.R. § 51.701) and not subject to access charges.[3] Qwest asserted that INS should bill the wireless

[3] The FCC has since eliminated the "local" terminology. See 47 C.F.R. § 51.701 (noting changes in 2001). Intercarrier Compensation for ISP-Bound Traffic, Implementation of the Local Competition Provisions of the Telecommunications Provisions in the Telecommunications Act of 1996, 16 FCC Rcd. 9151, ¶ 45 (2001), remanded on other grounds, 288 F.3d 429 (D.C. Cir. 2002); Level 3 Communications, LLC v. Publ. Util. Comm'n of Colo.; 300 F. Supp. 2d 1069, 1075 (D. Colo. 2003) (new version of rule governs).

carriers. However, as noted above, Qwest's commingling of traffic made this infeasible. INS made Qwest aware from the outset that Qwest's commingling of traffic made it infeasible for INS to bill the wireless carriers. Sherlock Dec., ¶ 10.

In October, 2000, INS filed amendments to its federal tariff to be effective on November 11, 2000. Complaint, Ex. B. The amendments declared that the originating wireless carrier would be the customer responsible for payment for intraMTA calls but that an intermediary carrier (Qwest) delivering the calls to INS would be liable if it failed to provide information requested by INS that would facilitate accurately billing the originating carrier. Pursuant to the FCC's jurisdiction over intrastate interconnection for wireless traffic under 47 U.S.C. § 332, the tariff amendments specifically applied to intrastate as well as interstate calls. Id. (page 186) INS filed the FCC tariff amendments to be effective on 15 days notice pursuant to 47 U.S.C. § 204(a)(3). Id. The FCC received and published notice of the tariff amendments. Public Notice, 2000 FCC Lexis 5768 (Oct. 31, 2000). Neither the FCC nor any party objected and the amendments went into effect on November 11, 2000.

INS continues to bill Qwest each month for the intraMTA wireless-originated calls. Sherlock Dec., ¶¶ 4, 12. Qwest continues to refuse to pay and continues to send the wireless-originated calls to INS. Id.

As described in the Creveling Declaration, INS requested information (the "Jurisdiction Information Parameter" or "JIP"), which would have facilitated billing the wireless carriers. Qwest refused to provide the JIP. Qwest ultimately provided some billing information, but wireless carriers have questioned the accuracy of the information. Creveling Dec., ¶¶ 2, 3. In addition to sending bills to Qwest for the intraMTA wireless-originated traffic, INS has also

sought payment from the wireless carriers. Despite INS' efforts, substantial dollar amounts billed to Qwest remain owing. Creveling Dec., ¶ 3.

B. PROCEDURAL HISTORY

The history of the Iowa Utilities Board ("IUB") declaratory ruling proceeding and the decisions of the IUB are set forth in detail in the Court's Ruling on Motion to Dismiss, dated October 9, 2002. In that decision, this Court granted Qwest's motion to dismiss the federal tariff (Count I) and state tariff (Count II) claims on the grounds that the IUB proceeding was *res judicata*. Ruling on Motion to Dismiss at 26-31 (the "RMD"). On the common law unjust enrichment claim (Count III), which had not been addressed in any way by the IUB, the Court dismissed on the merits. RMD at 31-36.

INS appealed. In its opinion remanding the Case, the Eighth Circuit held that the IUB proceeding was not *res judicata*. This reinstated the tariff counts. The Eighth Circuit also reinstated the unjust enrichment count, reversing the Rule 12(b)(6) dismissal for failure to state a claim upon which relief could be granted. Iowa Network Services, Inc. v. Qwest Corp., 363 F.3d 683 (8th Cir. 2004) ("INS/Qwest").

Since the Eighth Circuit's decision, Qwest has filed its Answer and a Motion to Consolidate this case with a related case involving the Rural Iowa Independent Telephone Association (Case No. 4:02-cf-90348). Qwest's Motion to Consolidate was denied on July 6, 2004 by an Order that also established deadlines for the briefing of this motion, disclosure of expert witnesses, and other matters, and set a jury trial date of June, 2005. (Doc. No. 47).

C. REGULATORY CLASSIFICATION OF INS

In the course of dismissing the unjust enrichment count, the Court in a footnote had concluded that INS is an incumbent local exchange carrier ("ILEC"). RMD at 32, n. 17. Because the dismissal of the unjust enrichment count generating the discussion of ILEC status

was reversed, the classification issue is now open. As the issue may become relevant to this motion, INS supplies the following information showing that it is a local exchange carrier ("LEC") but not an ILEC:

- The statutory test for classification as a LEC is that the carrier must either provide local telephone service (called "telephone exchange service") or access to local telephone networks (called "exchange access"). 47 U.S.C. § 153(26). INS provides exchange access in conjunction with the many rural LECs which formed INS. Sherlock Dec., ¶13 47 U.S.C. § 153(16). Because INS provides exchange access, it is a LEC.[4]

- The statutory test for classification as an ILEC has two prerequisites. First, the carrier must provide local telephone service ("telephone exchange service") as of the date of enactment of the 1996 Act – providing exchange access alone is not sufficient for ILEC as opposed to LEC status. Second, the carrier must as of February 8, 1996 have been "deemed to be a member of the exchange carrier association pursuant to section 69.601(b) of the Commission's regulations." 47 U.S.C. §§ 251(h)(1) and 153(47). As of February 8, 1996, INS did not provide local telephone service (that is what the rural ILECs did) and was also not deemed to be a member of the exchange carrier association, which is known as NECA.[5] INS did not own or in any way control local telephone wires, poles, or other facilities. Sherlock Dec., ¶¶ 14, 15. Thus INS meets neither pre-requisite for ILEC status.

- Finally, INS is a duly incorporated entity formed more than seven years prior to enactment of the 1996 Act, and is therefore not the same entity as the separately formed rural ILECs who own INS. See 47 U.S.C. § 251(h)(1)(B)(ii) (no provision for deeming an affiliate of an ILEC to be an ILEC unless, inter alia., the affiliate was formed "on or after" enactment of the 1996 Act). INS has its own board of directors and officers, and has maintained all the requisite corporate formalities. INS has done nothing that would justify disregarding the corporate separation between it and its shareholders.

- Many if not most communications carriers have affiliates. Those affiliates are properly treated as having separate identities for purposes of regulatory classification. *E.g.* AT&T

---

[4] See also, In re Application of Iowa Network Services Access Div., 3 FCC.Rcd. 1468 (1988), aff'd on reh'g, 4 FCC.Rcd. 2201 (1989) (functions of INS); RMD at 3-4. Non-incumbent LECs are subject to interconnection-related obligations set forth in 47 U.S.C. §§ 251(a) and 251(b), but not 251(c). ILECs other than rural ILECs qualifying as "rural telephone companies" are subject to the more extensive negotiation and interconnection duties set forth at § 251(c). 47 U.S.C. §§ 251(c) and (f). Although INS is not an ILEC, it should be noted that INS meets the criteria to be a rural telephone company. 47 U.S.C. § 153(37). Many INS shareholders would likely also meet that criteria.

[5] 47 C.F.R § 69.601(b) provides that carriers who receive money from or pay money into certain funds administered by NECA (the "NECA Funds") are deemed to be NECA members. As of February 8, 1996, INS did not receive money from or pay money into any of the NECA Funds. See Creveling Dec., ¶ 4. Thus INS was not deemed to be a NECA member.

is a long distance carrier, but AT&T Wireless was treated in the IUB proceedings as a CMRS carrier. Verizon is an ILEC in various areas, but its affiliate Verizon Wireless was likewise treated as a CMRS carrier. These are just two examples.

ARGUMENT

A. SUMMARY JUDGMENT STANDARD UNDER RULE 56

The standard for deciding a summary judgment motion is familiar. Summary judgment is appropriate only if "the pleadings, depositions, answers to interrogatories, and admissions on file, together with the affidavits, if any, show that there is no genuine issue as to any material fact and that the moving party is entitled to a judgment as a matter of law." Fed. R. Civ. P. 56(c). "The evidence presented must be viewed in a light most favorable to the nonmoving party, and the nonmoving party is entitled to the benefit of all reasonable inferences." Amir v. St. Louis Univ., 184 F.3d 1017, 1024 (8th Cir. 1999).

As shown below, Qwest fails to establish that no reasonable trier of fact could find in INS' favor. Qwest's request for a second early judgment in its favor must be denied.

B. THE TARIFFS RENDER QWEST RESPONSIBLE FOR PAYMENT.

The INS tariffs on file with the FCC and the IUB establish Qwest as the customer liable for payment for calls carried before November 11, 2000. For calls carried prior to that date, the FCC tariff governs interstate traffic and deems the customer to be the entity submitting an order for service, known as an Access Service Request. The state tariff governs intrastate traffic and also treats the person submitting the Access Service Request as the customer. Complaint, Ex A (page 69); Ex. C (page 117), Qwest admits it submitted Access Service Requests Answer, ¶ 16; see also, Sherlock Dec., ¶¶ 6, 11. It is undisputed that Qwest paid pursuant to the federal and state tariffs for the intraMTA wireless originated calls at issue from the 1980s through 1999.

For calls carried after November 11, 2000 the amended FCC tariff establishes rules more favorable to Qwest. Under the new rules, Qwest is treated as the customer liable for charges if

Qwest fails to promptly provide information requested by INS that would facilitate billing the wireless carriers who originate the calls. Complaint, Ex. B, page 187. If Qwest promptly provides the requested information in compliance with the tariff, the wireless carriers are instead treated as the liable customer. Id. Pursuant to the FCC's jurisdiction over intrastate wireless traffic under 47 U.S.C. § 332, the amended federal tariff specifically governs "intrastate" as well as interstate wireless-originated traffic. Id. The tariff terms clearly apply to the traffic at issue:

> When an Intermediary Carrier delivers Transiting Traffic between a CMRS provider and Iowa Network, the Intermediary Carrier shall promptly provide Iowa Network with usage information for that CMRS provider. The usage information shall be in a form acceptable to Iowa Network and, at a minimum, be consistent with MECAB and MECOD guidelines and in EMI format and otherwise sufficient to facilitate the billing of the CMRS provider pursuant to this tariff. If the Intermediary Carrier does not provide information requested by Iowa Network to accurately bill the CMRS provider, the Intermediary carrier shall be the customer for purposes of this intrastate and interstate traffic.

Complaint, Ex. B., at 186 (defining capitalized tariff terms) and 187. Thus the federal tariff supersedes the state tariff for intrastate calls carried after November 11, 2000, with the state tariff as an alternate ground for recovery in the event that Qwest succeeds in its argument that the federal tariff has no application.[6] Should Qwest contend that it did provide the information requested by INS to facilitate billing the wireless carriers at all relevant times, such competing factual positions can be resolved through discovery. See Creveling Dec., ¶¶ 2,3.

C. THE RECIPROCAL COMPENSATION RULES DO NOT BAR INS' CLAIMS AGAINST QWEST.

Qwest's primary argument has been its contention that the FCC's reciprocal compensation rules (specifically the MTA rule) became the exclusive source of compensation for every carrier involved in every aspect of every intraMTA wireless-originated call, to the

[6] The state tariff does not contain the new provision excusing Qwest from liability if it promptly provides information requested by INS to facilitate billing. Also, the amended FCC tariff confirms Qwest's absolute liability for calls carried prior to November 11, 2000, and so is an additional basis for recovery for those earlier calls. Complaint, Ex. C (page 188).

exclusion of access charges. Qwest also argues that the FCC lacked jurisdiction to accept a tariff governing interconnection rates for intrastate wireless traffic.

The FCC's decisions do not agree with Qwest's description of the reciprocal compensation rules, and the FCC can and does accept the filing of tariffs governing intrastate calls where it has jurisdiction over those calls. In order to rebut Qwest's arguments that the reciprocal compensation rules are contrary to the terms of the state tariff and to demonstrate why the FCC reasonably accepted the amended FCC tariff for filing, INS addresses these matters before turning to the impact of the Filed Tariff Doctrine.

1. The Reciprocal Compensation Rules Govern the Charges of Originating and Terminating Carriers, not Intermediary Carriers

The FCC has addressed the first key issue -- to whom do the reciprocal compensation rules apply? Do the reciprocal compensation rules apply to and govern the charges of every carrier in a multi-carrier calling path for a wireless-originated intraMTA call, or do they apply to and govern the charges of the two carriers at each end of the calling path, the carriers that originate and terminate the call? As shown below, assuming for the sake of argument that the reciprocal compensation rules do apply at all to multi-carrier connections[7], it is the two carriers at each end of the call (the originating carrier and the terminating carriers) whose rates are governed by the reciprocal compensation rules. Charges of intermediary carriers such as INS are not governed by the reciprocal compensation rules or any other rules adopted pursuant to the 1996 Act, and the ability to collect access charges is therefore not displaced.

a. Transiting Carriers are not Governed by the Reciprocal Compensation Rules.

[7] But see n. 10 below (discussing whether the reciprocal compensation rules apply to any aspect of a connection involving more than two carriers).

The origin of the FCC's decision to exclude intermediary carriers (also known as "transiting carriers") from the reciprocal compensation rules is a rule adopted in the 1996 Local Competition Order which defines reciprocal compensation arrangements as involving "two carriers" who charge each other to terminate calls originated by the other:

> [A] reciprocal compensation arrangement between two carriers is one in which each of the two carriers receive compensation from the other for the transportation and termination on each carrier's network of telecommunications traffic that originates on the facilities of the other carrier.

47 C.F.R. § 51.701(e). Under the rules, the originating carrier pays the terminating carrier. The originating carrier is the carrier that provides local telephone service (by radio or wire) to the calling party. The terminating carrier provides local telephone service to the called party. 1996 Local Competition Order, ¶ 1034; Texcom v. Bell Atlantic, Order on Reconsideration, 17 FCC. Rcd. 6275, ¶ 4 (2002) ("Texcom").

Since 1996, the FCC has applied Rule 51.701(e) several times, specifically holding that compensation to intermediary (also known as "transiting" carriers) is not governed by the reciprocal compensation rules. Texcom, 17 FCC.Rcd. 6275, 6276-6277, ¶ 4 (refusing to apply reciprocal compensation rules to limit charges of a transiting carrier, explaining "our reciprocal compensation rules do not provide for such compensation to a transiting carrier. Our rules provide a mechanism for the terminating carrier, such as Answer Indiana, to recover from originating carriers"). Mountain Communications, Inc. v. Qwest Comm'ns International, Inc., Order on Review, 17 FCC.Rcd. 15135, ¶ 3 (2002) ("Mountain Communications") (the transiting carrier, "*because* it is not a terminating carrier, could not recover reciprocal compensation payments for transiting traffic") (emphasis in original).[8]

---

[8] Another aspect of the Mountain Communications decision (concerning wide area calling) was vacated by the D.C. Circuit on appeal. In the oral argument on the transiting charges, the transiting carrier (Qwest) agreed to provide billing information to the terminating carrier so that the terminating

Here, the parties agree that INS is a transiting carrier. As Qwest stated in its brief to the Eighth Circuit: "[t]he services provided by Qwest and INS that are relevant to this appeal are known as 'transiting' services."[9]

The FCC's decision to limit the reciprocal compensation rules to the carriers which originate and terminate calls makes sense for both textual and competition policy reasons. From a textual perspective, Rule 51.701(e) is one of at least nine references in the reciprocal compensation rules to those rules governing "two carriers" or "both carriers." 47 C.F.R. §§ 51.701 to 51.717 – thus excluding additional carriers that are added as intermediaries.[10]

From a policy perspective, as this Court noted in its original ruling in this case, the Telecommunications Act of 1996 "was intended to jump-start competition in the market for local telephone service."[11] It is the originating and terminating companies that are providing local phone service and own the cell towers, local phone switches, telephone poles and wire necessary

---

carrier could bill the originated carrier, thereby prompting the terminating carrier which had been billed charges for transiting services to withdraw its appeal as to the transiting issue. See Mountain Communications, Inc. v. FCC, 355 F.3d 644, 649 (D.C. Cir. 2004).

[9] Consolidated Brief for Appellee Qwest Corporation at 14 (Case Nos. 02-3843, 02-4060, U.S. Ct. of Appeals for the Eighth Circuit) (filed May 20, 2003). Excerpts from Qwest's brief on appeal are supplied as Exhibit 3 to this brief.

[10] 47 CFR §§ 51.701(c) and (e), 51.705(b), 51.709(b), 51.711(a)(2), 51.711(b), 51.713(a); see also. 47 U.S.C. § 251(b)(5) (referring to "reciprocal" compensation) and Blacks Law Dictionary, 6th ed 1990 (defining a reciprocal relationship as one involving two parties: "Reciprocal – Given or owed mutually as between two persons; interchanged. Reciprocal obligations are those due from one person to another and vice versa."). Based on the references to two carriers, the FCC went too far and departed from its own rules in Texcom and Mountain Communications in applying the reciprocal compensation rules at all to multi-carrier arrangements. The rules implementing the 1996 Act refer to "the interconnection point between the two carriers" 47 C.F.R. § 51.701(c), which must mean "directly between." Further, in its 1996 Local Competition Order, the FCC contrasted two-carrier reciprocal compensation arrangements with multi-carrier arrangements involving access charges. 1996 Local Competition Order, ¶ 1034. Because INS is an intermediary carrier and the rural ILECs who are terminating carriers are not parties to the case, the Court will likely not need to reach this issue, but it is an additional reason supporting INS' right to enforce its tariffs.

[11] RMD at 4-5; Southwestern Bell Tel. Co. v. Connect Communications. Corp., 225 F.3d 942, 944 (8th Cir. 2000).

to provide such service. There is no way to reach the end user except through his or her chosen local phone company (wireless or landline).[12] By contrast, transiting carriers are in the business of carrying large quantities of calls between telephone switches owned by the originating and terminating carriers. See Sherlock Dec., ¶¶ 13-15. They are not providing the local telephone service, do not have any control over the end user customer, and are hired when their services are economical and convenient. Different regulations are thus called for.[13]

b. Transiting Carriers May Charge for Their Services Outside the Reciprocal Compensation System.

In Texcom and Mountain Communications, the FCC acknowledged the right of the transiting carrier to charge for its services outside the reciprocal compensation system. Texcom, 17 FCC.Rcd. 6275, ¶ 4; Mountain Communications, 17 FCC.Rcd. 15135, ¶ 2. This leaves the issue of what rules govern the charges that intermediary (transiting) carriers may impose for their services.

The FCC has answered this question by observing that it has not adopted any specific rules governing transiting carrier charges, and that transiting carriers therefore have flexibility in structuring their charges. Petition of WorldCom Inc. Pursuant to Section 252(e)(5) of the Communications Act for Preemption of the Jurisdiction of the Virginia State Corporation Commission Regarding Interconnection Disputes with Verizon Virginia Inc., and for Expedited Arbitration, Memorandum Opinion and Order, 17 FCC.Rcd. 27039, ¶ 115 (2002) ("Verizon

---

[12] See In the Matter of Access Charge Reform; Reform of Access Charges Imposed by Competitive Local Exchange Carriers, 16 FCC.Rcd. 9923, ¶ 30 (2001) (finding that once an end user selects a local telephone company, any carrier trying to get a call through to that end user must deal with the local telephone company, which controls the "bottleneck" to that end user); 1996 Local Competition Order, ¶ 1013 (finding that wireless carriers provide "telephone exchange service", a/k/a local telephone service, although by statute they are excluded from the definition of local exchange carrier, 47 U.S.C. § 153(26)).

[13] Here, for example, the wireless carriers could connect directly connecting with the rural ILECs directly (e.g. through satellite or microwave), rather than through Qwest and INS.

Virginia, Inc.") ("Given the absence of Commission rules specifically governing transit service rates, we decline to find that Verizon's additional charges are unreasonable").

The lack of restrictions on how INS charges for its services alone defeats Qwest's arguments that INS is charging in violation of FCC rules. There being no regulatory barrier; the tariffs accepted by the regulator should simply be enforced, without any need to even consider the Filed Tariff Doctrine.

The absence of any FCC decision to adopt new rules governing the charges of transiting carriers also validates INS' charges in another way. Congress in the 1996 Act provided for the continuation of pre-existing charging systems until "explicitly superseded" by subsequent FCC action. 47 U.S.C. § 251(g); Competitive Telecom. Ass'n v. FCC, 117 F.3d 1068, 1072 (8th Cir. 1997). It is undisputed that as of the enactment of the 1996 Act (and for three years thereafter) Qwest was paying INS for the traffic at issue, pursuant to the INS access tariffs, and had been doing so since the 1980s. INS/Qwest, 363 F.3d at 687; Creveling Dec., ¶ 1. Further, while Section 251(g) explicitly carries forward pre-existing rules only as to interstate services, the FCC concluded that Congress intended to carry forward pre-existing rules for intrastate services as well in any situation in which interstate rules are carried forward.[14] Consequently, under

[14] In its 2001 ISP-Remand Order, the FCC explained that Congress must have intended to exclude from Section 251(b)(5) reciprocal compensation any intrastate traffic that would be explicitly excluded under Section 251(g) if it were interstate. The FCC reasoned that it would be "incongruous" to have the reciprocal compensation rules cause more of a "disruption" at the intrastate level, where the FCC has historically had less authority, than at the interstate level:

"Although section 251(g) does not itself compel this outcome [carrying-forward pre-existing access charge regimes] with respect to intrastate access regimes (because it expressly preserves only the *Commission's* traditional policies and authority over interstate access services), it nevertheless highlights an ambiguity in the scope of "telecommunications" subject to section 251(b) (5) – demonstrating that this term must be construed in light of other provisions in the statute. In this regard, we again conclude that it is reasonable to interpret section 251(b)(5) to exclude traffic subject to parallel intrastate access regulations, because it would be incongruous to conclude that Congress was concerned about the effects of potential disruption to the interstate access charge system, but had no such concerns about the effects on analogous intrastate mechanisms." Intercarrier Compensation for ISP-Bound Traffic, Implementation

Section 251(g)'s carry-forward rule, and the FCC's determination that the carry-forward extends to intrastate traffic, Qwest's obligation to pay the charges set forth in INS' access tariffs remains in place. The obligation ceases only when the FCC explicitly supersedes that duty by setting new rules governing transiting carrier charges or Qwest chooses to cease using INS' service. Neither event has occurred.

Indeed Qwest itself successfully advocated to the FCC in the Mountain Communications case the point that transiting carrier charges for intraMTA traffic were "left intact" by the 1996 Act. A copy of pertinent pages from Qwest's brief is attached.[15] Qwest's argument in Mountain Communications that transit charges were left intact by the 1996 Act cannot be squared with its argument in this case that the 1996 Act destroyed INS' right to charge Qwest for the same intermediary carrier services that INS has always provided.

The IUB also agreed that INS could charge for transiting services, but mistakenly concluded (contrary to Texcom and Mountain Communications) that the reciprocal compensation rules changed the terms under which INS could impose those charges.[16] The IUB

---

of the Local Competition Provisions of the Telecommunications Provisions in the Telecommunications Act of 1996, 16 FCC.Rcd. 9151, ¶ 37, n. 66 (2001) ("ISP-Remand Order") (internal quotations omitted, bracketed material added and emphasis in original), remanded on other grounds, 288 F.3d 429 (D.C. Cir. 2002). The ISP Remand Order remains in force. Verizon Maryland, Inc. v. Global NAPs, Inc., No. 03-1448, 2004 U.S. App. LEXIS 15849 *31 (4th Cir. August 2, 2004).

In the ISP Remand Order, the FCC cited its previous ruling in the 1996 Local Competition Order that the carry-forward concept in Section 251(g) should apply to intrastate as well as interstate access traffic. See 1996 Local Competition Order, ¶ 732 (11 FCC.Rcd. at 15869) (relying on the Commissions' powers under Section 4(i) of the Communications Act, 47 U.S.C. § 154(i), to make all orders necessary and proper in carrying out its functions and 47 U.S.C. § 251(d)(1)).

[15] See Qwest Brief to the FCC in Mountain Communications v. Qwest Communications International, Inc. at 5 and n. 11 ("The Commission's reciprocal compensation rules specifically address a two-carrier scenario. . . . Transit charges, like many other lawful charges authorized by state law, were left intact by the Act"). Qwest's brief to the FCC is supplied as Exhibit 4 to this brief.

[16] In re Exchange of Transit Traffic, Order Affirming Proposed Decision and Order at 2, Docket SPU-00-7 (Iowa Utilities Board, March 18, 2002) ("Order Affirming Proposed Decision").

appears to have believed that the "local" terminology that the FCC formerly used to describe intraMTA traffic meant that even intermediary carriers were barred from collecting access charges. Id. However, the FCC has now abandoned the "local" terminology, confirming that it is not accurate to simply describe intraMTA calls (which can cover very long distances) as local calls and that what matters is whether the carrier's charges are or are not governed by the reciprocal compensation rules.[17] Moreover, even if the FCC had kept the "local" terminology and had intended to preclude the imposition of access charges by any carrier in the calling path including intermediary carriers, the FCC's separate decision not to regulate the charges of intermediary carriers would still leave intermediary carriers free to impose "transiting charges" equal to their former "access charges." See Verizon Virginia, Inc. 17 FCC.Rcd. 27039, ¶¶ 115-117 (rejecting attempt to limit Verizon's transit charges to the forward-looking cost standard governing ILEC reciprocal compensation charges, allowing Verizon to charge higher rates set by Verizon). Thus any objection to charging "access charges" is at most a matter of semantics. To avoid the semantics debate, INS' amended federal tariff describes the traffic at issue as "transiting" traffic and imposes a charge for carrying it. See Complaint, Ex. B at 186.

Finally, any argument by Qwest that the FCC has somehow restricted transiting carriers to collecting their charges from a particular carrier other than Qwest would run counter to the FCC's decision to refrain from adopting specific rules governing transiting carrier charges. Just because Qwest in this case bills the originating wireless carriers for its service does not mean that

---

[17] ISP Remand Order, 16 FCC.Rcd. 9151, ¶ 45 (reasoning that eliminating the category of "local" traffic better reflects the role of Section 251(g) in distinguishing between charges that are governed by reciprocal compensation rules and charges that are governed by the access rules). The FCC now orders carriers to use the term "section 251(b)(5) traffic" in lieu of the term "local traffic." Verizon Virginia, Inc., 17 FCC.Rcd. 27039, 27190, ¶ 315 . Changes removing all references to "local" in the reciprocal compensation rules were published at 66 Fed. Reg. 26806 (May 15, 2001) and incorporated into the Code of Federal Regulations. See, e.g. 47 CFR § 51.701. The old, now superseded rules, can be found at 61 Fed. Reg. 45632 (August 29, 1996); see also, Level 3 Communications, LLC, 300 F. Supp. 2d at 1076 (new version of rules governs).

INS is limited to the same decision. In an environment in which the FCC has not adopted specific regulations, INS' choice as to whom to charge for its services as a transiting carrier (the originating carrier unless a previous transiting carrier fails to pass on information requested by INS to facilitate billing the originating carrier) is an eminently reasonable and fair one. Evidently the FCC thought INS' tariff changes were reasonable when it accepted them.

2. Additionally, Qwest is Acting as an Interexchange Carrier and so even Carriers that are Subject to the Reciprocal Compensation Rules may Impose Access Charges.

Because Qwest is acting as an interexchange carrier ("IXC"), it is subject to access charges billed even by carriers (including the terminating carrier) who arguably would otherwise be limited to seeking reciprocal compensation. Therefore, should the Court for whatever reason disagree with the conclusion in Texcom and Mountain Communications that intermediary carriers are not governed by the reciprocal compensation rules, then the IXC exception to the intraMTA rule discussed by the IUB is a second reason why INS may collect its tariffed charges and why the FCC reasonably approved INS' tariff amendment.

a. IXCs Remain Subject to Access Charges for Intra-MTA Calls.

This IXC exception is referred to in paragraphs 1034 and 1043 of the 1996 FCC Order but is crystallized in the subsequent TSR Wireless Order issued by the FCC in 2000. See 1996 Local Competition Order, ¶ 1034 ("We find that the reciprocal compensation provisions of section 251(b)(5) do not apply to the transport or termination of interstate or intrastate interexchange traffic") and ¶ 1043 (even prior to the 1996 Act, most calls exchanged between CMRS carriers and LEC were not subject to access charges unless carried by IXCs, but where such calls were subject to access charges, they will continue to be subject to access charges). In the TSR Wireless Order, the FCC affirmed that the IXC exception applies to intraMTA calls,

explaining that calls that "originate[] and terminate[] within the same MTA .... fall[]under our reciprocal compensation rules if carried by the incumbent LEC and under our access charge rules if carried by an interexchange carrier." TSR Wireless, LLC v. US West Communications, Inc., 15 FCC.Rcd. 11166, 11184, ¶ 31 (2000), aff'd 252 F.3d 462 (D.C. Cir. 2001).[18]

Thus, to determine whether Qwest is liable for access charges under the IXC exception to the intraMTA rules, it is necessary to decide whether Qwest in carrying the wireless-originated intraMTA calls at issue is acting as an "incumbent LEC" or as an "interexchange carrier." The Eighth Circuit held in its order remanding this case that Qwest is not acting as an incumbent LEC with respect to the calls at issue. INS/Qwest, 363 F.3d at 693, n. 3. Instead, Qwest is acting an IXC. It is undisputed that the calls at issue travel state-wide and so cross the boundaries of local exchanges, meaning that they are interexchange. RMD at 1-3. Further, Qwest acted in a manner indistinguishable from any other IXC purchasing access service: (1) Qwest's facilities are landline facilities, as opposed to wireless, (2) Qwest delivered written "Access Service Requests" to INS to establish the trunks designated for interchange carriers over which Qwest delivers the calls at issue, (3) those trunks are the same trunks used to carry ordinary wireline-to-wireline long distance calls, (4) those are the same trunks for which Qwest has paid access charges to INS in the past, (5) Qwest makes no effort to distinguish or separate intraMTA wireless-originated calls from other long distance traffic. See Sherlock Dec., ¶¶ 2, 6, 7, 10, 11. Indeed Qwest paid for these calls pursuant to access tariffs for many years.

[18] In TSR Wireless, the traffic at issue was landline-to-wireless, but there is no reason to believe a different rule applies to wireless-to-landline traffic. The full quote excepted above is as follows: "MTAs typically are large areas that may encompass multiple LATAs, and often cross state boundaries. Pursuant to Section 51.703(b), a LEC may not charge CMRS providers for facilities used to deliver LEC-originated traffic that originates and terminates within the same MTA, as this constitutes local traffic under our rules Such traffic falls under our reciprocal compensation rules if carried by the incumbent LEC, and under our access charge rules if carried by an interexchange carrier." TSR Wireless, 15 FCC.Rcd 11166, ¶ 31

INS/Qwest, 363 F.3d at 684. "IXCs" are the purchasers of access service. Competitive Telcoms. Ass'n v. FCC, 117 F.3d 1068, 1072 (8th Cir. 1997).

The IXC exception applies to intrastate intraMTA calls as well as interstate intraMTA calls. The TSR Wireless decision recognizing the IXC exception involved wholly intrastate traffic -- calls from Flagstaff, Arizona to Yuma, Arizona. TSR Wireless, 15 FCC.Rcd. 11166, ¶ 31. There has been some confusion on this point. Without considering the FCC's holdings in the ISP Remand Order and the 1996 Local Competition Order that Congress intended to carry-forward intrastate access charges in situations in which 47 U.S.C. § 251(g) carried forward interstate access charges, the U.S. District Court in Montana construed the IXC exception as limited to interstate intraMTA calls. 3 Rivers Tel. Coop., Inc. v. U.S. West Communs., Inc., 2003 U.S. Dist. LEXIS 24871, *67-68, Case No. 99-80-GF-CSO (D. Mont. Aug. 22, 2003). Respectfully, the Montana District Court erred on this point. In addition to the TSR Wireless opinion recognizing the IXC exception in a case involving intrastate traffic, the FCC in the ISP Remand Order and 1996 Local Competition Order clearly held that where Section 251(g) applies to carry forward access charges for interstate traffic, access charges for intrastate traffic are also carried forward.[19] As noted by the FCC, any other result would have the "incongruous" affect of having the FCC rules have greater disruptive effect on intrastate traffic than interstate traffic.[20]

b. The IUB incorrectly Believed that the IXC Exception is Limited to IXCs Acting in a Retail Capacity.

The IUB recognized the IXC exception but construed it as being limited to IXCs that directly serve end users' customers, thereby excluding IXCs hired by other carriers. In other

[19] See footnote 14 in this brief for citations to and discussion of the portions of the ISP Remand Order and 1996 Local Competition Order addressing this issue.

[20] Id.

words, the IUB read the term "IXC" as limited to IXCs acting in a retail capacity. Proposed Decision and Order at 13, Docket No. SPU-00-7 (Iowa Utilities Bd., Nov. 26, 2001).

The IUB misconstrued federal law on this issue. Plainly, the definition of "IXC" under federal law is not limited to retail IXCs but includes IXCs providing service to other carriers. See Southwestern Bell Tel. Co. v. FCC, 116 F.3d 593, 595 (D.C. Cir. 1997) (describing provision of service by "facilities-based IXCs" to other carriers); AT&T Corp. v. Excel Communications Marketing, Inc., 172 F.3d 1352, 1353 (Fed. Cir. 1999) (same); Application of WorldCom, Inc. and MCI Communications Corp. for Transfer of Control, 13 FCC.Rcd. 18025, ¶¶ 34, 44, 45, 48, 50, 70 and n. 223 (1997) ("Application of WorldCom, Inc.") (detailed discussion of how IXCs provide both wholesale and retail long distance service); Bell-Atlantic Delaware, Inc. v. Frontier Communications, Inc., 16 FCC.Rcd. 8112, ¶ 3 (2001) (noting that "IXCs sell space on their networks to other IXCs"). Both retail and wholesale IXCs purchase access service. See Southwestern Bell Tel. Co., 116 F.3d at 595. Furthermore, providing capacity that other carriers may use in routing a call (as Qwest does in carrying the calls from the CMRS network to the INS network) is a basic wholesale long distance function. See Application of WorldCom, Inc., 13 FCC.Rcd. 18025, ¶ 50; AT&T Corp. v. American Cash Card Corp., 184 F.R.D. 515, 518 (S.D.N.Y. 1999). Further, in the Montana 3 Rivers case, the District Court on remand from the Ninth Circuit rejected Qwest's arguments that liability for access charges was limited to situations in which Qwest was acting in a retail capacity. 3 Rivers Tel. Coop. 2003 U.S. Dist. LEXIS 24871, *44.

Nothing in the 1996 Interconnection Order or the TSR Wireless Order alters the normal definition of IXC so as to limit the term to IXCs acting in a retail capacity, excluding IXCs hired by other carriers. To the contrary, limiting the IXC exception to retail IXCs would have

eviscerated the exception because retail IXCs are rarely if ever involved in carrying wireless-originated calls. The FCC acknowledged contemporaneously with issuing the 1996 Local Competition Order that Congress in another provision of the Telecommunications Act of 1996 exempted wireless carriers from the duty imposed on landline local exchange carrier to allow their end users to select a retail IXC of their choice.[21] Given this freedom, wireless carriers that desire assistance in carrying calls route them to wholesale IXCs, thereby keeping control of the relationship with the end user.

Moreover, since the issue is whether Qwest compensates INS, it makes far more sense to evaluate whether Qwest acted as an IXC based on how Qwest interacted with INS (e.g. by submitting "Access Service Requests" to INS, sending traffic over long distance access trunks used by other IXCs, paying for these calls for years pursuant to access service tariffs) than on the fortuity of whether an end user or another carrier hired Qwest. The practical impact of Qwest's involvement (it prevents INS from directly measuring the traffic from each wireless carrier) is the same regardless of who hired Qwest. See National Industrial Constructors, Inc. v. Occupational Safety and Health Rev. Bd., 583 F.2d 1048, 1055 (8th Cir. 1978) ("regulations should be given a reasonable, common sense interpretation" whenever possible).

Further, it is important to keep in mind that the fundamental purpose of the reciprocal compensation rules in particular and Section 251 in general is to promote competition for local phone service. Southwestern Bell Tel. Co. v. Connect Communications Corp., 225 F.3d 942, 944 (8th Cir. 1999) (Act is intended to "jump-start" local competition). The FCC's reciprocal

---

[21] 47 U.S.C. § 332(c)(8); In the Matter of Interconnection and Resale Obligations Pertaining to Commercial Mobile Radio Service, 11 FCC.Rcd. 12456, ¶ 3 (1996) (Because of Section 332(c)(8), CMRS carriers are not required to let the consumer choose a long distance carrier).

compensation rules apply to "competing" local service providers.[22] The purpose of promoting local competition may be advanced when a wireless carrier builds facilities in order to enter the market in the area served by a rural ILEC, and can use the MTA rule to establish a larger area (rather than the ILEC's smaller traditional local calling area) in which calls may be exchanged free of access charges. But here, Qwest proposes to set aside the IXC exception and apply the MTA rule even if there is no local competition at all going on between the wireless carriers and the rural ILEC. For example, under Qwest's interpretation, access charges would be avoided when a wireless carrier operating in the Illinois portion of the Iowa MTA routes calls through Qwest (and INS) to a rural Iowa ILEC, even though the wireless carrier never builds a facility anywhere in rural Iowa (or for that matter anywhere in Iowa), and so never competes with any rural Iowa ILECs. Similarly, Qwest's interpretation would eliminate access charges for calls to rural ILECs originating from wireless carriers who serve primarily the urbanized portions of the state. Indeed, Qwest has offered no evidence that any substantial portion of the calls at issue involve competing wireless carriers and rural ILECs. A few wireless carriers may build facilities in rural Iowa, but in such a case of actual local competition there is every reason to believe that wireless carrier would connect those facilities directly to the rural ILEC rather than pay to use Qwest's facilities.

Thus, consistent with the IXC exception, Qwest is a landline provider hired to carry calls from a customer of one local service provider (the wireless carrier) to a customer of another local

---

[22] 1996 Local Competition Order, ¶ 1087. The reciprocal compensation rules apply when "competitors are required to use the incumbent LECs' existing networks to terminate calls to incumbent LEC customers", when "terminating traffic destined for competing carriers' subscribers", and "when transporting and terminating a call that originated on a competing carrier's network". Id., ¶¶ 1058, 1090 (emphasis added). The only known exception where reciprocal compensation applies to calls between non-competitors is the so-called "neighboring ILEC" exception which has no application here (since we don't have two ILECs delivering calls to each other). See 47 CFR § 51.711(a)(2). Prior to the 1996 Act, neighboring ILECs exchanged calls free of access charges pursuant to extended area service ("EAS") arrangements, and the custom was carried forward.

service provider (the rural ILEC) without regard to whether the local service providers are competing. That is the classic IXC function for which IXCs pay access charges. See United Telephone Assoc. v. FCC, 188 F.3d 521, 523 (D.C. Cir. 1999). It is not a local competition function to be governed by the reciprocal compensation rules.

In short, Qwest acted as an IXC in delivering the calls to INS. At the very least, INS has raised genuine issues of material fact as to whether Qwest was acting as an IXC. The IXC exception supports the application of access charges to the intraMTA intrastate wireless-originated calls involved in this case. This is one more reason why the Court should not second-guess the FCC's judgment in approving the tariff amendments submitted by INS and why the state tariff complies with the FCC's rules.

3. Qwest Cites the 1996 FCC Order Out-of-Context

Qwest relies on the final sentence of paragraph 1036 of the1996 FCC Order for the proposition that reciprocal compensation charges displace access charges as to all carriers involved in any way in an intraMTA wireless-originated call.[23] However, a review of paragraph 1036 indicates that Qwest is quoting the FCC out-of-context.

Paragraph 1036 is part of a 20-page section of the 1996 Order devoted to defining rights and obligations under Section 251(b)(5). The FCC begins the paragraph by stating that "we will define the local service areas for calls to or from a CMRS network for the purposes of applying reciprocal compensation obligations under Section 251(b)(5)." The FCC then set the local service area boundaries as MTA boundaries, reiterated that this was "for purposes of reciprocal compensation under section 251(b)(5)" and observed "[a]ccordingly, traffic to or from a CMRS

[23] "Accordingly, traffic to or from a CMRS network that terminates within the same MTA is subject to transport and termination charges under section 251(b)(5), rather than interstate or intrastate access charges ...." 1996 Local Competition Order, ¶ 1036.

network that terminates within the same MTA is subject to transport and termination charges under section 251(b)(5), rather than interstate or intrastate access charges ...."

The last sentence of paragraph 1036 cannot be divorced from the preceding sentences explaining the purpose behind the FCC's action – to define the reciprocal compensation obligations of carriers subject to those obligations. As noted above, intermediary carriers do not have reciprocal compensation obligations in the first place, so the details of how those obligations are implemented do not affect them. Indeed, paragraph 1036 grants a right to receive reciprocal compensation in place of access charges, and therefore cannot apply to intermediary carriers, which the FCC has ruled do not have a right to receive reciprocal compensation. See Maintain Communications, 17 FCC.Rcd. 15135, ¶ 3.

Further, it is unrealistic to expect the FCC to include in each individual sentence of a lengthy narrative order referring to a general rule the precise specification of all exceptions and situations not covered by that rule. For example, the IXC exception recognized in the 1996 Order and affirmed in TSR Wireless is not listed in the last sentence of paragraph 1036. Clearly the last sentence cannot be taken as a complete summary of the entire law regarding when reciprocal compensation applies and when access charges do not.

4. Summary

Neither the amended federal tariff nor the state tariff contravene the FCC's reciprocal compensation rules. The FCC reasonably accepted the amended FCC tariff, and the state tariff is consistent with the charges by transiting carriers that the FCC permits and the FCC's preservation of the intrastate access change regime. Both tariffs are enforceable even before considering the impact of the Filed Tariff Doctrine.

D. THE FCC HAD JURISDICTION TO ACCEPT INS' TARIFF AMENDMENTS GOVERNING INTRASTATE WIRELESS-ORIGINATED TRAFFIC

Contrary to Qwest's claims, the FCC does have jurisdiction over interconnection for intrastate wireless-originated calls, and therefore the filing of the FCC tariff and its acceptance by the FCC was within the FCC's jurisdiction. As held by the Eighth Circuit, Section 332(c)(1)(B) of the of the Communications Act (enacted in 1993) granted the FCC jurisdiction over the interconnection between wireless carriers and wireline carriers for purposes of intrastate as well as interstate calling. Iowa Utils. Bd. v. FCC, 120 F.3d 753, 800, n.21 (1997) (finding that the FCC has jurisdiction over interconnection with CMRS carriers for purposes of intrastate calling), rev'd. in part, aff'd in rel. part, AT&T v. Iowa Utils. Bd. 525 U.S. 366 (1999). If the FCC lacks jurisdiction to regulate what INS charges for transporting intrastate intraMTA wireless-originated calls, then Qwest's argument that the FCC can apply its MTA rule to regulate INS' intrastate rates must also fail.

The Eighth Circuit's holding in Iowa Utilities Board v. FCC that the FCC has jurisdiction over interconnection rates for intrastate wireless-originated calls came in the proceedings for judicial review of the 1996 Local Competition Order. The Eighth Circuit's analysis came in two parts. First the Eighth Circuit agreed with a coalition of state public utility commissions that Section 251 of the Telecommunications Act of 1996, promoting local competition, did not explicitly grant the FCC jurisdiction over landline intrastate calls. 120 F.3d at 797-800. The Eighth Circuit therefore held that the FCC lacked jurisdiction over intrastate landline calls and vacated the FCC rules as to such calls, leaving implementation of Section 251 to the state commissions. Id. Second, the Eighth Circuit held that Section 332(c)(1)(B) did give the FCC jurisdiction over interconnection for wireless intrastate calls; accordingly the FCC upheld the

FCC rules. 120 F.3d at 800, n. 21. Finding that Section 251 implicitly gave the FCC jurisdiction over intrastate calls, the Supreme Court reversed the first part of the Eighth Circuit's holding, but no party ever challenged the second part of the Eighth's Circuit's holding (that Section 332 provided the FCC with jurisdiction over intrastate wireless calls). Id. The FCC has subsequently acknowledged that it has jurisdiction over intrastate wireless calls under Section 332, so the existence of such jurisdiction under Section 332 is now settled. TSR Wireless Order, 15 FCC.Rcd. 11166, ¶ 14; see also, Qwest Corp. v. FCC, 252 F.3d 462, 463-464 (D.C. Cir. 2001) (recognizing Section 332 jurisdiction) . Further, Section 332 is listed in 47 U.S.C. § 152(b) as an exception to the general presumption against the FCC having jurisdiction over intrastate traffic. 47 U.S.C. § 152(b).

There can be no issue about whether the tariff should be "construed" as intended to apply only to interstate traffic. The tariff language specifically covers "intrastate and interstate" calls. Complaint Ex. B at 187-188. Section 204(a)(3) of the Act authorizes the permissive filing of tariffs governing charges, classifications, regulations or practices, and the terms of the amended federal tariff establish such charges, classifications, regulations, and practices. Further, Section 204(a)(3) does not contain any limitation that the tariffs govern only interstate or foreign service.

> "A local exchange carrier may file with the Commission a new or revised charge, classification, regulation, or practice on a streamlined basis. Any such charge, classification, regulation, or practice shall be deemed lawful and shall be effective 7 days (in the case of a reduction in rates) or 15 days (in the case of an increase in rates) after the date on which it is filed with the Commission unless the Commission takes action under paragraph (1) before the end of that 7-day or 15-day period, as is appropriate. ..." 47 U.S.C. § 204(a)(3).

Consistent with INS' tariff filing, the FCC has previously accepted the filing of tariffs governing intrastate services, where the intrastate services are of a type within its jurisdiction. See, e.g. In the Matter of North Carolina Utilities Commission Order Dismissing and Directing

Filings, 13 FCC.Rcd. 5313, ¶ 1 (1998) (tariff filing pursuant to FCC's jurisdiction over intrastate payphone service under 47 U.S.C. § 276) (payphone service). The FCC has accepted such tariff filings without requiring a showing that a statute specifically authorizes the filing of a tariff governing intrastate service – what matters is that the service be within the FCC's jurisdiction. See North Carolina Order, 13 FCC.Rcd. at ¶ 1. Even Qwest admits that it files tariffs for intrastate service at the FCC where the FCC has established jurisdiction.[24]

E. APPLICATION OF THE FILED TARIFF DOCTRINE AND THE "DEEMED LAWFUL" STATUS OF THE FCC TARIFF

Qwest is not the first party in federal district court to make the argument that provisions in a tariff filed with and accepted by a regulator are contrary to law and cannot be enforced. The Filed Tariff Doctrine (also known as the Filed Rate Doctrine) has long swept away such arguments, whether based on federal or state law. See H.J., Inc. v. Northwestern Bell Tel. Co., 954 F.2d 485, 487-89 (8th Cir. 1992) (dismissing claim that telephone company violated the federal RICO statute by charging a tariff rate allegedly approved as a result of misconduct); Evanns v. AT&T, 229 F.3d 837, 840-841 (9th Cir. 2000) ("[T]he filed rate doctrine bars all claims - state and federal - that attempt to challenge [the terms of a tariff] that a federal agency has reviewed and filed.") (internal quotations omitted, bracketed material added); Hill v. BellSouth Telecomms., Inc., 364 F.3d 1308, 1315 (11th Cir. 2004) ("the filed rate doctrine dictates that the rates a carrier charges its customers, once filed with and approved by the FCC, become 'the law' and exclusively govern the rights and liabilities of the carrier to the customer

[24] At oral argument on July 9, 2002 on Qwest's first motion to dismiss, Qwest's counsel stated that Qwest files tariffs for intrastate services at the FCC where the FCC has asserted authority over an intrastate service. Transcript at 23. Excerpts from the transcript are supplied as Exhibit 5 to this brief.

.... causes of action in which the plaintiff attempts to challenge the terms of a filed tariff are barred by the filed rate doctrine").[25]

The Filed Tariff Doctrine ensures that all customers receive the same tariffed terms (i.e. no customer gets a better result through litigation) and the authority of the regulator who has already reviewed and accepted the tariff terms is preserved. See Hill, 364 F.3d at 1316 (two purposes of the doctrine are preventing discrimination among customers and preserving authority of regulator to review and evaluate tariffed terms).

The only contention advanced by Qwest that could possibly survive the Filed Tariff Doctrine is the contention that the FCC has no jurisdiction over intrastate wireless traffic. Arguably if the FCC clearly had no jurisdiction over the traffic, then the FCC would not have had jurisdiction to evaluate the tariff filling. However, as noted above, the FCC does have jurisdiction over intrastate wireless traffic pursuant to 47 U.S.C. §§ 332 and 152(b) and the Eighth Circuit's Iowa Utilities Board ruling, and has previously accepted the filing of intrastate tariffs in other situations in which it has jurisdiction.

Because the FCC had jurisdiction to evaluate the lawfulness of the tariff under the Communications Act, its decision to accept the tariff is precisely the type of regulatory judgment that the Filed Tariff Doctrine protects. Construing the FCC's own reciprocal compensation rules and their relationship with the provisions of 47 U.S.C. § 251(g) preserving access charges is surely a matter within the FCC's authorized sphere of action. Qwest may disagree with the FCC's decision to accept that tariff, but it has presented its disagreement in the form of an assertion to a court that the tariff cannot be enforced because of alleged non-compliance with

---

[25] The Filed Tariff Doctrine extends to all the terms in the tariff, not just terms that specifically set rates. AT&T v. Central Office Tel. Co., 524 US 214, 223-224 (1988); see Hill, 364 F.3d at 1315 (Filed Tariff Doctrine and Filed Rate Doctrine are the same thing).

federal law. Qwest's argument is a federal claim "that attempt[s] to challenge [the terms of a tariff] that a federal agency has reviewed and filed," Evanns, 229 F.3d at 841, and as such is barred by the Filed Tariff Doctrine. Brown, 277 F.3d at 1170 ("Under the filed rate doctrine, no one may bring a judicial challenge to the validity of a filed tariff.") (emphasis added).

The Communications Act provided Qwest with ample opportunity to challenge at the FCC the terms of the tariff when it was filed or at any time thereafter. Despite threatening to do so soon after the federal tariff was filed, Qwest has for four years persistently refused to invoke its statutory remedy of petitioning the FCC pursuant to 47 U.S.C. § 208 for a ruling on Qwest's allegations that the federal tariff terms are unlawful or invalid. Ambassador, Inc. v. U.S., 325 U.S. 317, 324 (1945); Maine Public Advocate v. FCC, 828 F.2d 68, 69 (1st Cir. 1987) ("A party aggrieved by the tariff may avail itself of the complaint procedure established by 47 U.S.C. § 208 to challenge the tariff's lawfulness and ultimately obtain a final and reviewable determination"); Metro East Center for Conditioning and Health v. Qwest Comm'ns International, Inc., 294 F.3d 924, 928 (7th Cir. 2002); Brown v. MCI WorldCom Network Servs., Inc., 277 F.3d 1166, 1173 (9th Cir. 2002). It is the defendant's responsibility to timely initiate at the FCC any defenses it has to a plaintiff's cause of action where such defenses are within the FCC's exclusive jurisdiction. United States v. Any & All Radio Station Transmission Equip., 207 F.3d 458, 463 (8th Cir. 2000) (defendant responsible for timely pursuing with the FCC a defense within that agency's jurisdiction).

While Qwest remains free today to bring an action at the FCC under 47 U.S.C. § 208 challenging the lawfulness of the INS amended federal tariff, the INS federal tariff is a deemed lawful tariff. 47 U.S.C. § 204(a)(3). As the tariff is deemed lawful, any ruling favoring Qwest would be prospective only and would not affect the existing receivable for which INS has sued

Qwest. See Implementation of Section 402(b)(1)(A) of the Telecommunications Act of 1996, Report and Order, 12 FCC.Rcd. 2170, ¶ 21 (1997) (deemed lawful tariff can only be ¶ 21 "reevaluated as to its future effect."); ACS of Anchorage, Inc. v. FCC, 290 F.3d 403, 411-413 (D.C. Cir. 2002) (any remedy for violation of a FCC rule in a deemed lawful tariff must be "prospective only" such that "§ 204(a)(3) immunizes ACS's rates for 1998"). Enactment of the deemed lawful provision of Section 204(a)(3) reversed prior caselaw that in some circumstances permitted non-deemed lawful tariffs to be invalidated retrospectively by the FCC. ACS of Anchorage, Inc., 290 F.3d at 411-413. This dramatically increased the importance of the acceptance by the FCC of a tariff, which occurred in this case. Id.

Here, the FCC exercised its regulatory judgment in accepting the amended tariff filing. As shown above in the discussion of the scope and reach of the reciprocal compensation rules, the FCC's judgment was a reasonable one, and the amended tariff terms are eminently fair to Qwest. This Court neither can nor should second guess the FCC's judgment.

F. UNJUST ENRICHMENT

The last aspect of this case is unjust enrichment.

In ruling in 2002 that Qwest had received no benefit from INS' service, the Court relied on Qwest's argument that Qwest was an "involuntary intermediary" compelled by the Communications Act to continue delivering wireless calls to INS:

> This Court finds as a matter of law that Qwest is not a beneficiary of the service INS provides, rather, Qwest is required to carry this traffic pursuant to the national interconnection policy established by the Act to encourage competition in providing local telecommunications services. [26]

The Eighth Circuit disagreed that Qwest was acting involuntarily in sending calls to INS:

---

[26] Ruling on Motion to Dismiss, at add. 32 (citing Qwest's "involuntary intermediary" argument) and add. 35.

> We respectfully believe that the district court misstated the law in stating that as an ILEC, Qwest was obligated to carry the CMRS traffic if requested to do so. ... Although Qwest serves as a LEC in certain communities to the extent it provides local telephone service, and may even been an ILEC, a fact not developed on the record, it served neither function with respect to the traffic here at issue.[27]

Given the Eighth Circuit's ruling, and drawing all reasonable inferences in favor of INS as required by the summary judgment standard, clearly a viable common law unjust enrichment cause of action exists.

All Qwest had to do to end liability to INS for the wireless-originated calls was to stop forwarding the calls to INS or, for calls carried after November 11, 2000 and governed by the amended FCC tariff, promptly provide INS with information requested by INS to facilitate billing the wireless carriers. Given the extensive discussion between the parties regarding the wireless-originated traffic problem, Qwest knew that INS could not in real time identify and block (refuse to complete) the wireless-originated calls for which Qwest would not pay, because of the mass of other calls that Qwest intermingled with them on the same trunks.[28] Sherlock Dec., ¶¶ 8, 10. Instead, Qwest chose to continue delivering these calls to INS knowing INS expected payment from Qwest. See Sherlock Dec., ¶¶ 11,12. This decision *de facto* extended the value and reach of Qwest's network -- Qwest was effectively able to sell the wireless carriers (for compensation to Qwest) access not only to Qwest's network but also to INS' extensive network reaching almost every rural ILEC in the State.

A reasonable trier-of-fact could find that Qwest received a benefit from INS' services. While not necessary to the conclusion that Qwest is liable, Qwest was and is a supplier to the

---

[27] INS/Qwest, 363 F.3d at 694, n. 3.

[28] An alternative way that Qwest could have avoided liability under the amended federal tariff would have been to separate out the wireless calls by carrier, so that INS could isolate and block non-paying traffic. Complaint, Ex. B, page 188.

wireless carriers, and so was in a position to protect itself by insisting on and negotiating the pass-through of INS' charges. RMD at 33.

As the Court noted, "proving unjust enrichment does not require complicated technical or legal arguments." RMD at 31. The basic principle here is neither complicated nor technical. If Qwest wanted to stop paying for INS' service, it should have stopped using INS' service.

As with the federal and state tariff counts, the unjust enrichment count should go forward.

CONCLUSION

For the reasons stated above, the Court should deny Qwest's motion for summary judgment. In order to expedite and streamline further proceedings, INS respectfully requests that the Court also enter an order that sets forth its rulings on all legal issues decided by it in connection with resolving Qwest's motion. See F.R.Civ.P. 16(c) and 56(d).

Respectfully submitted,

MCGUIREWOODS, LLP

James U. Troup
1050 Connecticut Avenue, N.W., Suite 1200
Washington, DC 20036
Telephone: (202) 857-1702
Facsimile: (202) 857-1737
jtroup@mcguirewoods.com

James H. Lister
1750 Tysons Boulevard, Suite 1800
McLean, VA 22102
Telephone: (703) 712-5063
Facsimile: (703) 712 5050
jlister@mcguirewoods.com

SULLIVAN & WARD, P.C.

Lawrence P. McLellan
801 Grand Avenue, Suite 3500
Des Moines, IA 50309-2719
Telephone: (515) 247-4715
Facsimile: (515) 244-3599
lmclellan@sullivan-ward.com

ATTORNEYS FOR PLAINTIFF

Dated: August 11, 2004

Certificate of Service

The undersigned hereby certifies that the foregoing was served by first class mail, postage prepaid this 11th day of August, 2004 on the following:

Shelia K. Tipton
DORSEY & WHITNEY LLP
801 Grand, Suite 3900
Des Moines, IA 50309

Bobbee J. Musgrave
MUSGRAVE & THIES LLP
370 17th Street, Suite 4450
Denver, CO 80202

Roy E. Hoffinger
PERKINS COIE LLP
1899 Wynkoop St., Suite 700
Denver, CO 80202-1043

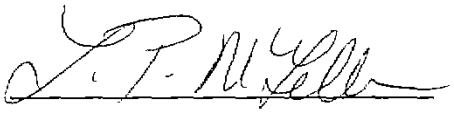

\\COR\389604.2

Exhibit 1

Declaration of Robert J. Sherlock

UNITED STATES DISTRICT COURT
FOR THE SOUTHERN DISTRICT OF IOWA
CENTRAL DIVISION

IOWA NETWORK SERVICES, INC.	:	
Plaintiff,	:	
v.	:	Civil No. 4:02-CV-40156
QWEST CORPORATION	:	
Defendant	:	

DECLARATION OF ROBERT J. SHERLOCK IN SUPPORT OF PLAINTIFF'S OPPOSITION TO DEFENDANT'S MOTION FOR SUMMARY JUDGMENT

I, Robert J. Sherlock, am employed by Iowa Network Services, Inc. ("INS") as its Vice President of Engineering. I am over age 18 and competent to testify. In support of the opposition of INS to Defendant Qwest's Motion for Summary Judgment, I provide the following testimony:

1. Wireless carriers (also known as Commercial Mobile Radio Service carriers or "CMRS" carriers) deliver telephone calls originated by their subscribers to Qwest ("wireless-originated calls").

2. Qwest mixes the wireless-originated calls with other calls and delivers them to INS ("commingling" and "commingled calls").

3. INS in turn delivers the wireless-originated calls to rural incumbent local exchange carriers ("ILECs") directly serving the called parties.

4. The calls at issue in this case are those that follow this calling path and begin and end within the Major Trading Area No. 32 Des Moines-Quad Cities (the "MTA").

5. Thus the calls at issue are both intrastate and interstate, but can be referred to as intraMTA wireless-originated calls.

6. Qwest submitted written orders to INS called "Access Service Requests" to establish the "trunks" on which INS receives the commingled calls from Qwest.

7. The trunks that INS established for Qwest and over which the commingled calls are received from Qwest, including intraMTA wireless-originated traffic, are interexchange carrier access circuits.

8. Because of the commingling by Qwest, the identity of the wireless or other carrier originating each call cannot readily be determined by INS. This hinders efforts by INS to bill the wireless carriers directly as Qwest would like INS to do.

9. In April, 1999, Qwest ceased paying for intraMTA wireless-originated calls. Qwest took the position that the calls were "local" under the intraMTA rule and not subject to access charges. Qwest asserted that INS should bill the wireless carriers.

10. INS communicated to Qwest at the outset of this dispute in 1999 that Qwest's commingling of traffic made it infeasible for INS to bill the originating wireless carriers and excuse Qwest from liability as Qwest requested.

11. From April, 1999 through the present, INS has continued to bill Qwest each month for intraMTA wireless-originated calls, and Qwest has continued to refuse to pay INS. Qwest has continued to place Access Service Requests with INS for interexchange carrier access circuits for the routing of intraMTA wireless-originated calls and other commingled calls.

12. From April, 1999 through the present, Qwest has continued to send intraMTA wireless-originated calls to INS.

13. INS provides "exchange access" in conjunction with the many rural ILECs which formed INS. The term "exchange access" is defined at 47 U.S.C. § 153(16).

14. As of February 8, 1996, INS did not provide "telephone exchange service," also known as local telephone service. The term "telephone exchange service" is defined at 47 U.S.C. § 153(47).

15. INS does not own local telephone wires, poles or other facilities needed to provide telephone exchange service, also known as local phone service.

I declare under penalty of perjury that the foregoing is true and correct, and that this Declaration was executed at Des Moines, Iowa on August 11, 2004.

Robert J. Sherlock

Corp 389522

Exhibit 2

Declaration of Dennis M. Creveling

To be Submitted

Exhibit 3

IN THE UNITED STATES COURT OF APPEALS
FOR THE EIGHTH CIRCUIT

IOWA NETWORK SERVICES, INC.,
Plaintiff – Appellant,
v.
QWEST CORPORATION,
Defendant – Appellee.

RURAL IOWA INDEPENDENT TELEPHONE ASSOCIATION,

Plaintiff – Appellant,
v.
IOWA UTILITIES BOARD, DIANE MUNNS, individually and in her official capacity as a member of the Iowa Utilities Board, **MARK O. LAMBERT**, individually and in his official capacity as a member of the Iowa Utilities Board, **ELLIOTT SMITH**, individually and as a member of the Iowa Utilities Board,
Defendant – Appellees,

QWEST CORPORATION,
Intervenor – Appellee.

ON APPEAL FROM THE UNITED STATES DISTRICT COURT
FOR THE DISTRICT OF SOUTHERN IOWA

CONSOLIDATED BRIEF FOR APPELLEE QWEST CORPORATION

Bobbee J. Musgrave
Steven J. Perfrement
PERKINS COIE LLP
1899 Wynkoop Street, Suite 700
Denver, CO 80202
Telephone: (303) 291-2300

David S. Sather
925 High St., Suite 9 S 9
Des Moines, Iowa 50309

C. The Parties and Their Dispute

Qwest provides local exchange and other services in parts of Iowa and thirteen other states in the central and western United States. See INS Add. at 2. RIITA is an association of incumbent LECs which provide local and other telecommunications services in parts of Iowa not served by Qwest ("Independent ILECs" or "Iowa Independent ILECs"). RIITA Br. at 8. INS was formed in 1987 by a number of Iowa Independent ILECs, many of which are members of RIITA, to own and operate telecommunication facilities used in the transmission of calls to and from incumbent LECs in Iowa other than Qwest. Id. at 3.

The calls that are the subject of Appellants' Complaints (and this appeal) are "wireless" calls originated by Iowa customers of various third-party CMRS providers that terminate at the premises of customers served by Iowa Independent ILECs. The Des Moines MTA "encompasses nearly all of the State of Iowa," and the "vast majority of the traffic at issue" originates and terminates in the Des Moines MTA. In re Exchange of Transit Traffic, Proposed Decision and Order, Docket No. SPU-00-7, TF-00-275 (DRU-00-2) (Iowa Utilities Board), issued November 26, 2001 ("IUB Proposed Decision"), at 21, INS App. p. 120. Under the FCC's Local Competition Order and section 51.701(b)(2) of the FCC's

---

(defined based on the parties' locations at the beginning of the call) is subject to transport and termination rates under section 251(b)(5), rather than interstate or intrastate access charges").

regulations, these "intra-MTA" calls are classified as "local" for purposes of sections 251 and 252, including the reciprocal compensation provisions of section 251(b)(5).

As the Board found, and as no party disputes, if a wireless customer in Iowa places a call to a customer of an Iowa Independent ILEC, the calling party's wireless carrier (*i.e.*, the CMRS provider) transports the call to Qwest; Qwest transports the call to INS; and INS transports the call to the Iowa Independent ILECs for termination at the premises of its customer. IUB Proposed Decision at 40, INS App. p. 139, (Findings of Fact, ¶1); INS Dist. Ct. Op. p. 4, INS Add. p. 4. The services provided by Qwest and INS that are relevant to this appeal are known as "transiting" services. As the Board explained, "the CMRS carriers do [not] want the expense of building the network that would be required" if they did not use transiting carriers, "while the [independent ILECs] do not want multiple direct connections and INS does not want to lose the revenues it receives for switching and transporting this traffic." IUB Proposed Decision p. 30, INS App. p. 129.

Qwest provides its transiting service to CMRS providers in Iowa through interconnection agreements approved by the Board.[3] "The payments from the wireless carriers Qwest charges the[m] are for the wireless carriers' use of the Qwest network, which allows the wireless carriers to fill gaps in their own

network, and not for the use of INS' or the [Iowa ILECs] networks." INS Dist. Ct. Op. p. 33, INS Add. p. 33.

Through April 1999, for the CMRS traffic transiting its network, Qwest made payments to INS and the Iowa Independent ILECs pursuant to their intrastate long distance tariffs filed with the Board. IUB Proposed Decision p. 40, INS. App. p. 139, (Findings of Fact ¶2). Thereafter, Qwest confirmed to INS and the Iowa Independent ILECs that consistent with the FCC regulations described above, it would cease making payments pursuant to their tariffs. Id. 102-03, 139, (Findings of Fact ¶3). "By doing so, Qwest put INS and the [Iowa Independent ILECs] on notice that Qwest no longer believed it was ordering (and therefore would no longer pay for) access services" for the CMRS-originated traffic transiting its network, as the Board subsequently found. Id. at 136-137.

Nevertheless, neither INS nor the Iowa Independent ILECs ever sought compensation from, or an interconnection agreement with, the CMRS providers. Instead, in or about November 2000, or about six months after the Board commenced its proceeding, INS filed a tariff at the FCC purporting to impose access charges on Qwest for the transport by INS of traffic originated by third-

[3] Transiting service for intra-MTA traffic originated by CMRS providers is provided by Qwest pursuant to interconnection agreements.

Exhibit 4

DUPLICATE

Before the
FEDERAL COMMUNICATIONS COMMISSION
WASHINGTON, D.C. 20554

RECEIVED
JAN 19 2001
FEDERAL COMMUNICATIONS COMMISSION
OFFICE OF THE SECRETARY

In the Matter of MOUNTAIN COMMUNICATIONS, INC., Complainant, v. QWEST COMMUNICATIONS INTERNATIONAL, INC., Defendant.	)	File No. EB-00-MD-017

RECEIVED
JAN 22 2001
Chief, MDRD
Enforcement Bureau

QWEST CORPORATION'S BRIEF ON THE DISPUTED MATERIAL ISSUES

Blair A. Rosenthal
Qwest Corporation
1020 19th Street, N.W., Suite 700
Washington, D.C. 20036
(303) 672-2974 (telephone)
(303) 295-6973 (facsimile)

Dated: January 19, 2001

EXHIBIT
5

TABLE OF CONTENTS

Page

SUMMARY ii

I. QWEST MAY LAWFULLY CHARGE MOUNTAIN FOR THE PORTION OF DEDICATED FACILITIES USED TO CARRY TRANSIT TRAFFIC 2

II. QWEST IS ENTITLED TO CHARGE MOUNTAIN FOR OPTIONAL FACILITIES QWEST OFFERS THAT ARE NOT NECESSARY FOR INTERCONNECTION 10

III. QWEST HAS COMPLIED FULLY WITH ITS OBLIGATIONS TO NEGOTIATE IN GOOD FAITH 13

IV. MOUNTAIN'S CLAIMS ARE LIMITED BY THE TWO-YEAR STATUTE OF LIMITATIONS PERIOD APPLICABLE TO DAMAGE CLAIMS UNDER 47 U.S.C. § 415 15

EXHIBIT 1: Second Supplemental Declaration of Sheryl R. Fraser

SUMMARY

In this brief on the disputed issues, filed pursuant to the Bureau's order, Qwest addresses the key claims Mountain has made in this proceeding. As we demonstrate, there is no validity to any of Mountain's claims, and the best use of the Bureau's resources would be to dismiss the complaint and encourage meaningful and productive negotiations.

There is no basis for Mountain's transit claims. In *TSR Wireless*, the Commission held unambiguously that paging carriers are required to pay for facilities used for transit traffic. This decision articulated what both the Commission and the industry had understood since the Commission first interpreted the Act's reciprocal compensation rules in the *Local Competition Order*: those rules address compensation only for traffic between the originating carrier serving the calling party, and the terminating carrier serving the called party. Thus, compensation for an intermediate carrier delivering transit traffic to the terminating carrier is simply not addressed by those rules. Mountain's complaint is nothing more than a request that the Commission use this proceeding to articulate wholly new intercarrier compensation rules and overrule the *TSR Wireless* holding so as to find Qwest liable for seeking to collect transit charges; Mountain makes no showing whatsoever that, absent this proposed rule change, Qwest's actions violate any Commission rule or statutory provision. The Commission should not countenance Mountain's misuse of the adjudicative process.

Qwest is entitled to charge Mountain for optional facilities Qwest offers that are not necessary for interconnection. In *TSR Wireless*, the Commission specifically held that LECs may charge paging carriers for wide area calling and similar optional services that are not necessary for interconnection but instead allow the paging company to "buy down" or eliminate the toll charges the LEC's customers ordinarily pay for toll calls to the paging carrier. If

Mountain wishes to interconnect with Qwest without charge (other than transit charges), it may do so at one or several points of connection in Colorado, but, pursuant to Qwest's state tariff, Qwest would of course impose standard toll charges on Qwest's own customers for non-local calls delivered to Mountain's point of connection. If Mountain seeks not only interconnection but elimination or reduction of those standard toll charges on Qwest's customers, it can purchase a wide area calling equivalent service configuration -- for which the Commission specifically held Qwest may charge.

Qwest negotiated in good faith. Contrary to Mountain's unfounded allegations, Qwest makes public all of its interconnection agreements. Moreover, Qwest has persistently made a good faith effort to negotiate an interconnection arrangement with Mountain. If any party has acted in bad faith, it is Mountain, which has refused to consider – or even respond to – interim provisioning agreements and interconnection agreements that reflect any and all rights that Mountain can reasonably claim to have under the Commission's rules and orders. Mountain has failed to make a good faith attempt to settle its dispute with Qwest and instead has brought a frivolous complaint, which has taxed the Commission's and Qwest's resources without reasonable justification.

Mountain's claims are limited by the two-year statute of limitations under 47 U.S.C. § 415. Mountain's claims fall squarely within the reach of the Act's statute of limitations. *See* 47 U.S.C. §415 (b).

DUPLICATE

Before the
FEDERAL COMMUNICATIONS COMMISSION
WASHINGTON, D.C. 20554

In the Matter of MOUNTAIN COMMUNICATIONS, INC., Complainant, v. QWEST COMMUNICATIONS INTERNATIONAL, INC., Defendant.	))))))))))))	File No. EB-00-MD-017

RECEIVED
JAN 2 2 2001
Chief, MORD
Enforcement Bureau

QWEST CORPORATION'S BRIEF ON THE DISPUTED MATERIAL ISSUES

Pursuant to the Enforcement Bureau staff's letter issued on December 13, 2000, Qwest Corporation ("Qwest") hereby submits its Brief on the Disputed Material Issues. As has been clear throughout this proceeding, Mountain's primary argument in this case – that it is unlawful for Qwest to assess "transit charges" on Mountain – has been decisively addressed in the *TSR Wireless Order*,[1] and Mountain's complaint amounts to nothing more than a request that the Commission utilize this proceeding to amend that holding and articulate entirely new intercarrier compensation rules. Mountain's only other claim is that Qwest must not only interconnect with Mountain without charge, but also must bear the additional costs of optional facilities that are designed to eliminate a significant portion of the routine toll charges that Qwest would otherwise collect from its own customers for calls delivered to Mountain's point of connection ("POC") in Pueblo. Like the transit argument, this contention was plainly rejected by the Commission in

TSR Wireless, and thus merits not even the attention that Mountain pays it in its January 5, 2001 brief on the disputed issues. As the remainder of that brief demonstrates, there simply are no issues in this case that merit serious consideration in this proceeding.

I. THERE IS NO BASIS FOR MOUNTAIN'S CLAIMS THAT TRANSIT CHARGES ARE UNLAWFUL.

As Qwest pointed out at the status conference with Commission staff and argued at length in its Motion to Dismiss, Mountain's complaint with respect to the propriety of Qwest's "transit" charges presents no issues that were not before the Commission in *TSR Wireless*. In *TSR Wireless*, the Commission expressly held that paging providers "are required to pay for 'transiting traffic,' that is, traffic that originates from a carrier other than the interconnecting LEC but nonetheless is carried over the LEC network to the paging carrier's network."[1] As Mountain essentially concedes, this ruling is unambiguous and decisive with respect to any and all of Mountain's transit claims. Thus, rather than try to argue that its claims somehow survive the *TSR Wireless* ruling, Mountain is reduced to attacking the holding in that case, or seeking to rewrite it to suit its needs. Thus, Mountain argues that the Commission's ruling that paging carriers are required to pay for transiting traffic either is "wholly unsupported by the *Local Competition Order* or other Commission rulings,"[2] or, conversely, that the *TSR Wireless* holding on transit charges is the product of "inartful drafting" and "would only be true if the words 'non-

---

[1] Memorandum Opinion and Order, *TSR Wireless, LLC v. U S West Communications, Inc.*, 15 FCC Rcd 11166, 11177 n.70.

[2] *TSR Wireless*, 15 FCC Rcd at 11177 n.70. In doing so, the Commission denied a paging company complainant's claim that transit charges were unlawful. *See id.*; Reply Brief of TSR Wireless LLC, *TSR Wireless, LLC v. U S WEST Communications, Inc.*, File No. E-98-13 at 6 (July 24, 1998).

[3] Mountain's Opposition, at 4. *See id.* at 4-5 (contesting the *TSR Wireless* holding); Mountain's Brief, at 1-5, 7 (same).

sent paid' were inserted ahead of the words 'transiting traffic' and 'traffic.'"[4] These contentions are entirely unfounded. If the *TSR Wireless* holding on transit charges were amended as Mountain suggests it should be, the holding or the ensuing new rules would be inconsistent with the Telecommunications Act of 1996 ("the Act"), the Commission's rules and orders, state law implementing the Act, and well-established industry practice.

The reciprocal compensation rules, which are set forth in section 251(b)(5) of the Act, 47 U.S.C. § 251(b)(5), address the relationship between originating and terminating carriers. Specifically, the Act dictates which of those two carriers shall be responsible for the "costs associated with the transport and termination on each carrier's network facilities of calls that originate on the network facilities of the other carrier." *Id.* § 252(d)(2)(A)(i). Mountain does not quarrel with the basic contention that a carrier is only required to bear the costs of the traffic it originates. Instead, it argues that there are several means of interpreting the term "originates," and that in this case, Qwest somehow becomes the "originating carrier" for calls that originate on a third carrier's network, transit Qwest's network and are delivered to Mountain's paging network.[5] As Mountain argues:

> As between [Qwest] and Mountain Communications, all call traffic originates from [Qwest] and is terminated by [Qwest] on Mountain Communications' network. Therefore, as the originating party, [Qwest] is responsible for all

---

[4] Mountain's Brief, at 3, 4. Mountain makes the bizarre assertion that transit traffic can be described as "sent-paid" traffic. *See, e.g.*, *id.*, at 3, 5, 7. This is based on Mountain's unsupported and inaccurate argument that "in all cases except for toll-free, collect, or reverse billing traffic, LECs receive compensation from the originating carrier for handling third party originated transit calls." *Id.*, at 5. In fact, as Qwest already has explained at length, Qwest never bills originating carriers for the dedicated facilities used to deliver those carriers' transit traffic from Qwest's central office to Mountain's POC; thus, the fact that Qwest receives compensation from originating carriers is a *non sequitur* with respect to whether Qwest should be able to recover from Mountain for the portion of those dedicated facilities used to deliver transit traffic. *See* Qwest's Motion to Dismiss, Ex. 1.

[5] *See, e.g.*, Compl. ¶¶ 46, 97.

> facilities charges, including any recovery for facilities and/or transport costs from any prior carrier of the call traffic.[6]

In other words, Mountain contends that there is no such thing as transit traffic because, under Mountain's theory, 100 percent of the traffic delivered to Mountain would be deemed Qwest-originated vis-à-vis Mountain.[7]

Mountain's proposed definition of "originating carrier" is unprecedented.[8] In interpreting the Act's reciprocal compensation provisions, the Commission never even questioned the logical conclusion that a call "originates" on a carrier's network when that carrier's customer is the calling party. Thus, in the *Local Competition Order*, the Commission explained that under the Act's reciprocal compensation framework, "*the local caller pays charges to the originating carrier*, and the originating carrier must compensate the terminating carrier for completing the call."[9] Commission staff recently reaffirmed this, noting that "[u]nder the Commission's current reciprocal compensation rules for incumbent LECs, the *calling party's*

---

[6] *Id.* at ¶ 46.

[7] *See, e.g.*, *id.* at ¶¶ 37, 40, 103.

[8] It also is absurd: If all traffic were deemed to originate with Qwest after it was delivered to Qwest by a third carrier, this would include distinctly non-local traffic, from outside the MTA. This would eviscerate the Commission's limitations of reciprocal compensation to local traffic in 47 C.F.R. § 51.701(b); moreover, it would demonstrate the absurdity of Mountain's "double recovery" claim, as Qwest would be subject to reciprocal compensation obligations for non-local traffic vis-à-vis the terminating carrier, but would have no reciprocal compensation rights vis-à-vis the non-local call delivered to it by the originating carrier.

[9] First Report and Order, *Implementation of the Local Competition Provisions in the Telecommunications Act of 1996; Interconnection between Local Exchange Carriers and Commercial Mobile Radio Service Providers*, 11 FCC Rcd 15499, 16013 ¶ 1034 (1996) ("*Local Competition Order*") (emphasis added).

network generally must pay the *called party's network* to terminate the call."[10] Because there is only one calling party, there is only one "originating" carrier; likewise, there is only one called party and one terminating carrier. Thus, the Commission's reciprocal compensation rules specifically address a two-carrier scenario: "[E]ach of *the two carriers* receives compensation from the other carrier for the transport and termination on each carrier's network facilities of local telecommunications traffic *that originates on the network facilities of the other carrier.*" 47 C.F.R. § 51.701(e) (emphasis added). Or, as the D.C. Circuit has explained, "when a customer of LEC A calls a customer of LEC B, LEC A must pay LEC B for completing the call." *Bell Atl. Tel. Cos. v. FCC*, 206 F.3d 1, 4 (D.C. Cir. 2000).

As demonstrated below, it has always been understood by all significant participants in the 251-252 interconnection process that this formulation of the reciprocal compensation framework does *not* address the obligation to pay for facilities used to carry transit traffic.[11] An intermediate carrier that carries an originating carrier's traffic to a terminating carrier is *not* the originating carrier, notwithstanding Mountain's creative efforts to distort the term. Indeed, the Commission has always distinguished between originating and transiting traffic, and has never suggested that the two might be conflated for some purposes.[12] Thus, under the reciprocal

---

[10] Patrick DeGraba, *Bill and Keep at the Central Office As the Efficient Interconnection Regime*, OPP Working Paper Series No. 33, 5 ¶ 12 (FCC, Dec. 2000).

[11] Transit charges, like many other lawful charges authorized under state law, were left intact by the Act and the Commission's rules and orders implementing the Act, including the *TSR Wireless Order*. As demonstrated below, the widely recognized interpretation of the reciprocal compensation framework dictates that transit charges are not reciprocal compensation and therefore are not prohibited by the Act or the Commission's rules and orders implementing the Act.

[12] *See, e.g.*, Memorandum Opinion, Order and Request for Further Comments, *Interconnection Arrangements Between and Among the Domestic and International Record Carriers*, 93 F.C.C.2d 845, 854 ¶ 28-29 (1983) (distinguishing between originating and transiting carriers); Memorandum Opinion and Order, *AT&T Corp., et al. For Grant of Section 214*

compensation rules, even where traffic transits an intermediate carrier, the originating carrier retains the obligation to compensate the terminating carrier; the Commission implicitly observed this in passing in BellSouth's 271 proceeding, noting a terminating carrier's efforts to obtain information from BellSouth, the transit carrier, so that the originating carrier could be billed.[12] Even the Personal Communications Industry Association ("PCIA"), one of the main proponents of paging companies' reciprocal compensation rights, has stated unequivocally that transit charges are not covered – or prohibited – by the reciprocal compensation rules: "To the extent that traffic delivered to paging companies . . . originates on the facilities of a carrier other than the LEC who delivers it to the paging carrier, then it does not qualify as 'local LEC-originated traffic.'"[13] And, "To the extent that interconnection facilities are used to deliver transit traffic, the paging carrier pays."[14] Similarly, notwithstanding Mountain's contention that a lone, unpublished arbitration decision by the Wisconsin Public Services Commission allegedly

---

Authority, 14 FCC Rcd 19140, 19177 n.168 (1999) ("Transit allows a carrier in one country, the originating carrier, to route traffic to a carrier in another country, the destination carrier, through a carrier in a third country, the transit carrier.") (Although Mountain has for some mystifying reason, challenged the accuracy of this citation, Mountain Opposition at 9 & n.16, it is and remains accurate.) Congress is presumed to be aware of— and embrace— existing interpretations when it adopts laws using similar terms. *See Lorillard, Div. Of Loew,'s Theatres, Inc. v. Pons*, 434 U.S. 575, 580 (1978); *Public Citizen, Inc. v. FAA*, 988 F.2d 186, 194 (D.C. Cir. 1993) (same).

[12] *See* Memorandum Opinion and Order, *Application of BellSouth Corporation, BellSouth Telecommunications, Inc., and BellSouth Long Distance, Inc., for Provision of In-Region, InterLATA Services in Louisiana*, 13 FCC Rcd 20599, 20774-75 ¶ 301 (1998) Although Mountain has for some mystifying reason, challenged the accuracy of this citation, Mountain Opposition at 9 & n.16, it is and remains accurate.

[13] PCIA, THE INTERCONNECTION OF ONE-WAY MESSAGING NETWORKS AND THE PUBLIC SWITCHED TELEPHONE NETWORK: ANSWERS TO COMMON QUESTIONS 17 (2nd ed. June 1999), *attached to* Notice of Ex Parte Presentation on behalf of PCIA, CC Docket No. 95-185 (July 7, 1999) ("PCIA Interconnection").

[14] *Id.* at 15.

prohibits transit charges, numerous state public utility commissions, including the PUC in Colorado (which is the only market in which Mountain interconnects with Qwest), have ruled that carriers have a right to collect transit charges from terminating carriers.[16] Specifically, the Colorado state public utility commission has acknowledged Qwest's right to collect transit charges,[17] and has approved 87 interconnection agreements with CLECs, independent LECs, and CMRS carriers allowing for the assessment of transit charges on the terminating carrier.[18] A chart attached to an *ex parte* PCIA filed in 1999 demonstrates that every major LEC-paging

---

[16] *See* Colorado Public Utilities Commission ("CPUC"), Decision Regarding Petition for Arbitration, *AirTouch Paging Inc.'s Petition for Arbitration of an Interconnection Agreement with U S WEST Communications, Inc. Pursuant to 47 U.S.C. § 252*, Dkt. No. 99A-001T, Decision No. C99-419 at 15, 18 (Apr. 28, 1999) (noting AirTouch's concession that payment is due for the portion of USWC facilities used to deliver transit traffic); CPUC, Ruling on Application for Rehearing, Reargument, or Reconsideration, *AirTouch Paging Inc.'s Petition for Arbitration of an Interconnection Agreement with U S WEST Communications, Inc. Pursuant to 47 U.S.C. § 252*, Dkt. No. 99A-001T, Decision No. C99-651 at 2 & nn. 3, 4 (Jun. 17, 1999) ("[T]he amount of exempt traffic (*i.e.*, non-local traffic and traffic originating on the network of a telecommunications carrier other than [Qwest]), affects the extent of AirTouch's obligation to pay facilities charges to [Qwest]."); Washington Utilities and Transportation Commission, Order Modifying Arbitrator's Report, and Approving Interconnection Agreement With Modifications, *Petition for Arbitration of an Interconnection Agreement Between AirTouch Paging, and U S West Communications, Inc: Pursuant to 47 U.S.C. Section 252*, Docket No. UT-990300, 1999 Wash. UTC LEXIS 199, at *29-30 ¶ 52 (Jul. 1, 1999)("Transit traffic refers to local traffic that U S WEST transports to AirTouch's network but does not originate on U S WEST's network; therefore, U S WEST is not obligated to pay AirTouch reciprocal compensation for transit traffic."); *id.* at *27-28 ¶ 49 ("[I]nterconnection facilities are used to deliver third-party (non-U S WEST) transit traffic to AirTouch (for which AirTouch will be paying a pro rata share of facilities."); Ohio Public Utility Commission, *Establishment of Local Exchange Competition and Other Competitive Issues*, Case No. 95-845-TP-COI, 1997 WL 120529, at *16 (Feb. 20, 1997) ("The intermediate LEC carrying traffic originating and terminating on other carriers' networks shall be compensated for the use of its network facilities to complete the call.").

[17] *See, e.g.*, CPUC, Decision Regarding Petition for Arbitration, *AirTouch Paging*, *supra* note 16, at 15, 18; CPUC, Ruling on Application for Rehearing, Reargument, or Reconsideration, *AirTouch Paging*, *supra* note 16, at 2 & nn. 3, 4.

[18] *See* Qwest's Response to Mountain's First Interrogatory.

company interconnection agreement that had been negotiated as of that date included charges for facilities used to deliver transit traffic.[19]

Thus, Mountain's suggestion that the *TSR Wireless Order* either is inconsistent with the Act and/or must be understood to include Mountain's theory of double origination, is plainly wrong. And even if its arguments were not so substantively flawed, this proceeding cannot be used to modify the Commission's holding in the separate *TSR Wireless* proceeding – Mountain's attorney already has filed a petition to review the *TSR Wireless Order*, and thus is aware what the proper vehicle for the relief it seeks is.[20] Nor would it be appropriate for the Commission to articulate entirely new, and obviously unprecedented rules in this adjudicative proceeding.[21] Notwithstanding all of Mountain's arguments, it has been able to point to no Commission statement *whatsoever* that would have forewarned Qwest that the Commission's reciprocal

---

[19] PCIA, LEC-PAGING INTERCONNECTION AGREEMENTS SINCE THE PASSAGE OF THE TELECOM ACT OF 1996, *attached to* Notice of Ex Parte Presentation on behalf of PCIA, CC Docket No. 95-185 (July 22, 1999).

[20] The *TSR Wireless Order* is currently under reconsideration on the precise issue at stake in this proceeding, pursuant to a petition filed by Mountain's attorney, Michael Higgs, on behalf of Small Business In Telecommunications. *See Petition for Reconsideration or Clarification of Memorandum Opinion & Order, TSR Wireless, LLC v. U S West Communications, Inc.*, File Nos. E-98-13 (July 20, 2000).

[21] Mountain also raises vague questions concerning Qwest's transit charges, suggesting that they recover costs Qwest already recovers from originating carriers. As set forth in n. 11, *supra*, and in the Supplemental Declaration of Sheryl Fraser attached to Qwest's Motion, this assertion is unfounded and entirely inaccurate. Moreover, as Qwest argued in its Motion to Dismiss, any argument concerning the amount of Qwest's transit charges should be made to the Colorado PUC, which reviews all of Qwest's interconnection agreements with carriers in that state; such a claim is not properly before the Commission. Qwest does point out for the record, however, that Mountain's accusation that Qwest submitted "contradictory testimony" regarding its transit factor, Mountain Opposition at 11, is completely off base. As is clear from Qwest's pleadings, Qwest conducted traffic studies that support a transit factor *higher* than 26.2%; as a result of interconnection negotiations, Qwest agreed on a *compromise* transit factor of 26.2%. *See* Fraser Supplemental Decl. ¶ 5; Answer ¶ 30; Boone Decl. ¶¶ 11; Compl. Ex. XXIII. Thus, Qwest proposes to use a lower transit factor that is the product of negotiations and supported by traffic data, even though it is not directly based on the traffic studies, which support a higher factor.

compensation rules might be interpreted so as to cover – and prohibit – transit charges. Of course, in the wake of the *TSR Wireless* holding, there is no way Mountain *could* make such a showing. It would thus be especially unfair to use this proceeding to fashion a new rule and apply it to Qwest's detriment.[22] Moreover, the Commission generally is reluctant to use restricted adjudicatory proceedings to fashion new rules,[23] and should be especially so in this context when it is in the process of industry-wide proceedings on the revision of the intercarrier compensation rules.[24] If the Commission indeed wishes to specifically address intercarrier

---

[22] As argued at length in Qwest's motion to dismiss, the case law is clear that it would be "manifest injustice" to penalize Qwest for relying on rules that were not remotely ambiguous and were recently reiterated by the Commission in a similar proceeding. *See, e.g.*, *Consolidated Freightways v. NLRB*, 892 F.2d 1052, 1058-59 (D.C. Cir. 1989) (retroactive application of new rule allowed only if no "manifest injustice"); *Retail, Wholesale, & Dep't Store Union v. NLRB*, 466 F.2d 380, 390 (D.C. Cir. 1972) (considering the extent to which a defendant relied on a preexisting rule or could have anticipated the new rule in deciding whether to hold defendant retroactively accountable to new rule); *Gilbert v. Federal Mine Safety & Health Review Comm'n*, 866 F.2d 1433, 1442-1443 (D.C. Cir. 1989) (applying *Retail* test to deem retroactive application of new rule arbitrary and capricious).

[23] *See, e.g.*, Memorandum Opinion and Order, *Stockholders of Renaissance Communications Corp. and Tribune Co.*, 12 FCC Rcd 11866, 11887-88 ¶ 50 (1997) (finding that a closed proceeding is not the proper forum to reexamine existing regulatory definitions); Memorandum Opinion and Order, *Capital Cities/ABC, Inc.*, 11 FCC Rcd 5841, 5888 ¶ 87 (1996) (finding that an adjudicatory proceeding is not the proper forum to reexamine the geographic market definition); Memorandum Opinion and Order, *Great Empire Broadcasting*, 14 FCC Rcd 11145, 11148 ¶ 8 (1999) (refusing to entertain challenge to "the validity of the rules themselves" in adjudicatory proceeding); Memorandum Opinion and Order, *TerraStar, Inc. Request for Declaratory Ruling to Clarify Section 25.104*, 13 FCC Rcd 4192 (1997) (alteration of rule should be left to a rulemaking proceeding); Second Report and Order, Order on Reconsideration, and Fifth Notice of Proposed Rulemaking, *Petitions for Reconsideration of the Denial of Applications for Waiver of the Commission's Common Carrier Point-to-Point Microwave Radio Service Rules*, 12 FCC Rcd 12545, 12705 ¶ 388, 389 (1997).

[24] *See* Communications Daily 3 (Dec. 15, 2000) (reporting Common Carrier Bureau Chief Dorothy Atwood's announcement of plans to open proceeding on standardizing intercarrier compensation); *Comment Sought on Remand Of the Commission's Reciprocal Compensation Declaratory Ruling by the U.S. Court of Appeals For The D.C. Circuit; Pleading Cycle Established*, Public Notice, 15 FCC Rcd 11311 (rel. June 23, 1999).

compensation for transit charges, those pending industry-wide proceedings present the only appropriate context for doing so.

II. QWEST IS ENTITLED TO CHARGE MOUNTAIN FOR OPTIONAL FACILITIES QWEST OFFERS THAT ARE NOT NECESSARY FOR INTERCONNECTION.

In its brief, Mountain argues that Qwest must not only provide it with free interconnection and deliver all local traffic to it without charge, but also must provide Mountain free, optional facilities that are designed to eliminate a significant portion of the routine toll charges that Qwest would otherwise collect from its own customers for calls delivered to Mountain's point of connection in Pueblo.[19]

In making this argument, Mountain flatly ignores the Commission's ruling in *TSR Wireless* on precisely this issue. In that proceeding, the Commission held that while a LEC is required to interconnect with a paging carrier within the MTA and deliver all intraLATA traffic to the paging carrier without charge, it also is entitled to impose toll charges on its own customers for such traffic to the extent the calls completed over the interconnection facility between the LEC and the paging company originated beyond the LEC's local calling area over that facility.[20] To the extent the paging carrier wishes to arrange its business so that the LEC *cannot* assess such toll charges on its own customers, the paging carrier may order "wide area calling or similar services" from the LEC. However, as the Commission explicitly held in *TSR Wireless*, such services are "not necessary for interconnection," and the LEC therefore is not

---

[19] *See* Mountain's Brief, at 7-9 (arguing that Mountain is entitled to free facilities throughout the MTA); Second Supplemental Declaration of Sheryl Fraser (explaining how and why Qwest offers optional facilities to suppress toll charges to Qwest's customers) (attached as Exhibit 1).

[20] *TSR Wireless* at 11184-85 ¶ 31 & n.107 ("However, nothing prevents U S West from charging its end users for toll calls completed over the Yuma-Flagstaff T-1," which the Commission presumed "would be billed as a toll call to the caller placing the call.").

compelled to offer such services without charge.[27] As the Commission noted, "it would seem incongruous for LECs who *choose* to offer these services not to be able to charge for them."[28]

Mountain never even considers the implications of this ruling for Mountain's claim. Instead, it simply argues the uncontested point that Qwest is obligated to interconnect with Mountain locally and deliver free traffic within the MTA. But Qwest does offer (and has offered to Mountain) an interconnection configuration that provides paging carriers with free facilities dedicated to interconnection.[29] Qwest is not disputing its basic obligation to interconnect at any point within the MTA (within the LATA). Indeed, Mountain may interconnect with Qwest at a *single POC* within the LATA if it so chooses, and will not be charged for any intraLATA facilities (other than transit charges).[30] However, pursuant to Qwest's state tariff, Qwest routinely would charge its own end users toll charges for any intraLATA non-local calls that are delivered to Mountain's POC.[31] Notwithstanding Mountain's argument that *its* local calling area is the entire MTA,[32] calls that originate in one local calling area and terminate in another are toll calls to Qwest's customers, pursuant to Qwest's state General Exchange tariff in Colorado.

Mountain may, however, choose to purchase an optional service from Qwest that promotes the appearance that Mountain has local paging numbers in several different calling areas, even though it has only one POC within the LATA. Pursuant to this arrangement,

---

[27] *Id.* at 11183-84 ¶ 30

[28] *Id.* (emphasis added).

[29] *See* Second Supplemental Declaration of Sheryl Fraser, at ¶¶ 3-4.

[30] *Id.* at ¶3.

[31] *Id.*

[32] Mountain's Brief, at 7-8.

Mountain can offer its paging subscribers in each of these local calling areas a paging number that will be "local" to that local calling area, so that a Qwest customer in that area would pay toll charges only if he or she called a Mountain paging number housed in a different local calling area. This is advantageous to Mountain's subscribers (and thus Mountain's business case), because it allows more calls to Mountain paging numbers to be treated as local (i.e., non-toll) calls.[11] In fact, Mountain has opted to do just that, and has ordered precisely such "toll charge suppression" services from Qwest.[12] Mountain has opted to establish a single POC in Pueblo and has obtained DID numbers from Qwest that reside in Qwest's central offices in Pueblo, Walsenberg and Colorado Springs; as part of this service, Mountain obtains dedicated toll facilities from Qwest to connect those telephone numbers to its POC in Pueblo.[13] In this manner, calls to the DID numbers in each of the relevant central offices appears local (and involve no toll charges) to callers in that area.[14] But in return for this wide area calling equivalent, Mountain must pay Qwest a flat monthly rate for the dedicated facilities across Qwest's toll network; there of course is no charge (other than transit) for the local interconnection facility between Qwest's central office in Pueblo and the Pueblo POC.[15]

As the Commission ruled in *TSR Wireless*,[16] this arrangement is not *necessary* for interconnection, but provides optional additional features. Mountain can interconnect with

---

[11] *See* Second Supplemental Declaration of Sheryl Fraser, at ¶ 5. *See also id.*, at ¶¶ 6-7.

[12] *See id.* at ¶ 8.

[13] *See id.* at ¶¶ 7-8 & Diagram 4.

[14] *See id.* at ¶¶ 7-8.

[15] *See id.*

[16] *TSR Wireless* at 11183-85 ¶¶ 30-31.

Qwest with no charge whatsoever (with the exception of transit charges), and has a right to interconnect at a single POC within Qwest's LATA, so long as it does not object to Qwest collecting routine toll charges from Qwest's own customers for non-local calls delivered to that POC.[38] If Mountain instead seeks to reconfigure the routine interconnection arrangement solely in order to optimize its own business case by reducing or eliminating the toll charges that Qwest's customers would otherwise pay for calls placed to Mountain's subscribers, Mountain must pay for that optional service feature. As the Commission ruled, if Qwest chooses to offer these optional services, "it would seem incongruous [if it were] not to be able to charge for them."[39] There is no valid argument to support the contention that Mountain has a right to receive this service without charge.

III. QWEST HAS NEGOTIATED IN GOOD FAITH.

Mountain contends that in its Opposition and Objections to Complainant's Request for Interrogatories, Qwest "declare[s] it may have failed to disclose or file interconnection agreements,"[41] and suggests that this demonstrates that Qwest has negotiated in bad faith.[42] While it is unclear in the first instance why that allegation would demonstrate bad faith with respect to Qwest's negotiations with Mountain, it is in any event entirely unfounded. Qwest has made public *all* of its interconnection agreements with other carriers, as specifically required

---

[38] Mountain also may establish several POCs in several local calling areas within the LATA and thus also achieve a local presence without charge. *See* Second Supplemental Declaration of Sheryl Fraser, at ¶ 9.

[39] *TSR Wireless* at 11183-84 ¶ 30. Qwest has no independent interest in offering toll free paging numbers, since toll charges would be a source of revenue; thus, while Mountain suggests all interconnection between Qwest and Mountain serves Qwest's interests, it cannot assert that this would be true with respect to "toll free" calling arrangements.

[41] Mountain's Brief, at 9.

[42] *Id.* at 9-10.

under section 252 of the Act. Qwest simply asserted in its Opposition and Objections that settlement and release agreements, which are not interconnection agreements but instead relate to the terms of dismissing litigation in connection with past charges, are not and should not be made public.[49]

There is no basis at all for an assertion that Qwest has acted in bad faith in negotiating with Mountain. To the contrary, if any party has acted in bad faith, it is Mountain, which has refused to consider – or even respond to – interim provisioning agreements and interconnection agreements that reflect any and all rights that Mountain can reasonably claim to have under the Commission's rules and orders. Qwest's Answer details repeated efforts by Qwest to initiate and proceed with interconnection negotiations, all of which were ignored or rebuffed by Mountain. Every time the Commission or Common Carrier Bureau has clarified the Commission's view of incumbent LECs' legal obligations to paging companies, Qwest re-rated the services and facilities in question and offered Mountain interconnection agreements and alternative provisioning arrangements in an effort to comply with the applicable orders, eliminating all prospective facilities charges disallowed by the Commission, and offering alternative provisioning agreements without the need for a section 252 interconnection agreement.[50] At no time did Mountain even offer a counterproposal to any of Qwest's offers. Mountain even failed

---

[49] Defendant's Opposition and Objections to Complainant's Request for Interrogatories at 8-9.

[50] For example, Qwest offered Mountain an Interim Provisioning Agreement that allowed Mountain to "continue to receive existing facilities pending resolution of the dispute between the parties without the need for Mountain to pay its outstanding balance" and "offered Mountain facilities for no charges other than transit charges and nonrecurring facilities charges." Joint Statement, Stipulated Facts, ¶¶ 14-15. Moreover, a "section 252 interconnection agreement was not required in order for Mountain to receive those terms, nor was Mountain required to settle its outstanding balances." *Id.* ¶ 15. Qwest's actions have in no way been unlawful, coercive or otherwise in bad faith.

to respond to Qwest's most recent, post-*TSR Wireless* offer, which provides for reciprocal compensation payments from Qwest to the paging carrier for traffic that originates on Qwest's network and provides the paging carrier with free interconnection facilities, permitting Qwest to assess charges only for the portion of dedicated facilities used to deliver transit traffic and facilities that are not necessary for interconnection, such as wide-area calling and similar services.[49]

Mountain's failure to even consider these offers, or use them at least as a starting point for section 252 negotiations, demonstrates *its* lack of good faith here, and its attempt to utilize the Commission's section 208 process in order to obtain damages or other relief that it recognizes it could not achieve in the negotiation or arbitration framework. This is not only bad faith, but an abuse of the Commission's complaint process. Indeed, Mountain cannot even claim to have engaged in any meaningful attempt at settlement prior to – or since – bringing its complaint, in violation of 47 C.F.R. § 1.721(a)(8) and contrary to established Commission policy.[50] Qwest has been and continues to be willing to settle this dispute with Mountain and to provide Mountain with the interconnection terms to which it is entitled in accordance with the *TSR Wireless Order*. The proceeding has taxed the Commission's and Qwest's resources without reasonable justification.

---

[49] *See* Answer Ex. 1, Attach. 2 §§ 1-4.

[50] *See* Report and Order, *Implementation of the Telecommunications Act of 1996: Amendment of Rules Governing Procedures to Be Followed When Formal Complaints Are Filed Against Common Carriers*, 12 FCC Rcd 22497 (1997). The Commission has acknowledged that there are strong public policy reasons for encouraging carriers to settle their disputes privately, without taking up the Commission's resources through formal complaints. *See, e.g.*, *Brooten v. AT&T Corp.*, 12 FCC Rcd 13343, 13351 ¶15 & n.58 (1997) ("The Commission's policy, moreover, is to encourage carriers and their customers to settle disputes over rates and practices outside of the often costly and time consuming complaint process.") (citing *U.S. Sprint Communications Co. v. AT&T Co.*, 9 FCC Rcd 4801, 4804 ¶16 (1994)).

IV. MOUNTAIN'S CLAIMS ARE LIMITED BY THE TWO-YEAR STATUTE OF LIMITATIONS PERIOD UNDER 47 U.S.C. § 415.

Mountain's argument that its claims should relate back more than two years is oddly devoid of any reference to the statute of limitations. Mountain's claims are limited by the two-year statute of limitations period applicable to damage claims under 47 U.S.C. § 415 (b). The Commission has no jurisdiction to ignore this statute of limitations, nor does (or could) Mountain suggest any basis that section 415 (b) should not apply. Accordingly, Mountain should not be permitted to pursue any claims relating back prior to September 11, 1998.

Respectfully submitted,

Blair A. Rosenthal (by [illegible])

Blair A. Rosenthal
Qwest Corporation
1020 19th Street, N.W., Suite 700
Washington, D.C. 20036
(303) 672-2974 (telephone)
(303) 295-6973 (facsimile)

Dated: January 19, 2001

Exhibit 5

COPY

IN THE UNITED STATES DISTRICT COURT
FOR THE SOUTHERN DISTRICT OF IOWA
CENTRAL DIVISION

IOWA NETWORK SERVICES, INC., Plaintiff, vs. QWEST CORPORATION, Defendant.	Civil. No. 4-02-cv-40156 TRANSCRIPT OF HEARING (Motion to Dismiss)

Courtroom, Second Floor
U.S. Courthouse
123 East Walnut Street
Des Moines, Iowa
Monday, July 8, 2002
9:00 a.m.

BEFORE: THE HONORABLE JAMES E. GRITZNER, Judge.

TERRI L. MARTIN, CSR, RPR, CRR
United States Court Reporter
Suite 189, U.S. Courthouse
Des Moines, Iowa 50309

APPEARANCES:

For the Plaintiff:

LARRY P. MCLELLAN, ESQ.
Sullivan & Ward, P.C.
801 Grand Avenue, Suite 3500
Des Moines, Iowa 50309

JAMES U. TROUP, ESQ.
McGuire Woods, LLP
1050 Connecticut Avenue N.W.
Suite 1200
Washington, D.C. 20036

SEAN F. MURPHY, ESQ.
McGuire Woods, LLP
1750 Tysons Boulevard, Suite 1800
McLean, Virginia 22102

For the Defendant:

DAVID S. SATHER, ESQ.
925 High Street, Suite 9 S 9
Des Moines, Iowa 50309

ALEX M. DUARTE, ESQ.
421 Southwest Oak Street
Room 810
Portland, Oregon 97204

1 folks want 1.4 cents per minute, and they're trying to get
2 it -- what they're trying to do is get indirectly what the FCC
3 said they can't get directly.
4 Now, there's a wide variety of law -- and it's in our
5 brief -- that an indirect attack on an FCC order is a direct
6 attack on an FCC order, and if they're directly attacking that
7 order, they cannot be before you because of 47 U.S.C. 2352, the
8 Hobbs Act.
9 THE COURT: Well, it may well be that they're trying
10 to do something indirectly. What I'm trying to get a grasp at,
11 though, you make the petition for this tariff, file the tariff
12 in 2000 and there's no objection from any of the parties that
13 might be implicated by this and there's also no objection from
14 staff at the FCC, and yet your argument is that that tariff is
15 inconsistent with existing rules at the FCC. I'm trying to
16 figure out how that happens, how you can get a tariff on file
17 that's inconsistent with the rules and no one brings that to
18 light.
19 MR. SATHER: Well, I can answer that question, Your
20 Honor, and it's a very good question. The staff at the FCC
21 doesn't particularly care when tariffs such as this get filed.
22 If nobody objects, then in 15 days it goes into effect. It's
23 not approved, it's not blessed, it's just there, and after 15
24 days it becomes effective. And, therefore, your question is --
25 two questions arise out of that, but one of them you touched

1 upon. Why didn't Qwest object to that? Because the tariff
2 doesn't apply to the traffic at issue here. It's an interstate
3 tariff. The traffic at issue here is intrastate. By
4 definition, the Iowa MTA is virtual toll intrastate.
5 Now, if they can show there were some interstate
6 calls involved here, fine, carve those out. We don't have a
7 dispute over interstate calls, but the huge bulk of traffic
8 here is intraMTA, which is virtually all, 99 percent all within
9 the State of Iowa, and the Board recognized this, Your Honor.
10 The Board said -- I don't think they used the phrase de
11 minimus, but they used a phrase very similar to that and said
12 to the extent there is some traffic, it's so small that this
13 does not become all interstate. If the FCC preempts, which
14 they've done in areas such as special access, private lines,
15 point-to-point lines, all of those are the same thing, much of
16 the traffic over those lines is interstate traffic. Large
17 businesses buy those lines. Most of the traffic is interstate.
18 There may be intra as well.
19 So the FCC has preempted and said you can file either
20 in the intrastate arena or the interstate arena. Qwest
21 generally, in that sense, in that area, will file at interstate
22 because it's one tariff instead of 14 state tariffs, but
23 there's been no preemption by the FCC here. It's just the
24 opposite. The FCC says local, local, local, local, and you
25 don't file a local service offering tariff at the federal

1 level unless the FCC has preempted.
2 So why didn't Qwest attack it? It doesn't apply. I
3 don't care what they file on a federal tariff if it doesn't
4 apply to an intrastate offering. So they had never billed us.
5 If the federal tariff is the basis for billing us as they
6 claim, what was the basis the month before they filed the
7 federal tariff and the month before that and the month before
8 that? I think they would say they were billing under the
9 intrastate tariff prior to that time.
10 THE COURT: Well, that certainly is an interesting
11 point, but I'm curious about the situation that arises when we
12 have FCC rules and an FCC tariff which, as I read the law,
13 becomes effectively law, in and of itself, that when you have
14 that situation, not necessarily why didn't you object, but my
15 question is, to the extent we have a conflict between the two,
16 who gets to resolve that conflict?
17 MR. SATHER: You do. You do by simply saying --
18 Well, let me back up a moment.
19 THE COURT: I'm not sure you mean I do.
20 MR. SATHER: Well, I did that once 40-some years ago.
21 Let me say this. We have to be careful here now that
22 we don't -- I have to be careful that I don't point out to you,
23 we're not attacking inter, just as the Board did not attack
24 that tariff. We're just saying, Your Honor, if we had a
25 traffic accident and a jury is sitting over here trying to

Exhibit 56

Letter from James U. Troup and Tony S. Lee to Michael J. Hunseder and James F. Bendernagel (dated March 10, 2017)

HIGHLY CONFIDENTIAL MATERIALS OMITTED

Exhibit 57

FCC, Trends in Telephone Service (W.C.B. Sept. 2010)

PUBLIC VERSION

Trends in Telephone Service

Industry Analysis and Technology Division
Wireline Competition Bureau

September 2010

This report is available for reference in the FCC's Information Center at 445 12th Street, S.W., Courtyard Level. Copies may be purchased by calling Best Copy and Printing, Inc., Portals II, 445 12th Street S.W., Room CY-B402, Washington DC 20554 at 800-378-3160, facsimile 202-488-5563, or via e-mail fcc@bcpiweb.com. The report can also be downloaded from the Wireline Competition Bureau Statistical Reports Internet site at: www.fcc.gov/wcb/iatd/trends.html.

PUBLIC VERSION

Table of Contents

Introduction…… 1-1

Access Charges…… 1-1

Table 1.1 Interstate Per-Line Access Charges…… 1-3
Table 1.2 Interstate Per-Minute Access Charges…… 1-4
Table 1.3 Interstate Per-Line Access Charges by Carrier…… 1-5
Table 1.4 Interstate Per-Minute Access Charges by Carrier…… 1-7

Advanced Telecommunications…… 2-1

Table 2.1 High-Speed Connections…… 2-3
Chart 2.1 Fixed High-Speed Connections…… 2-3
Chart 2.2 High-Speed Connections by Technology…… 2-3
Table 2.2 Residential High-Speed Connections…… 2-4
Chart 2.3 Residential Fixed High-Speed Connections…… 2-4
Chart 2.4 Residential High-Speed Connections by Technology…… 2-4
Table 2.3 Total High-Speed Connections by Speed Tier…… 2-5
Table 2.4 Residential High-Speed Connections by Speed Tier…… 2-6
Table 2.5 High-Speed Connections by Technology by State…… 2-7
Table 2.6 Percentage of High-Speed Connections by Download Speed by State…… 2-9
Table 2.7 Percentage of Residential End-User Premises with Access to High-Services by State .. 2-11
Table 2.8 Residential Fixed High-Speed Connections and Households by State…… 2-12
Chart 2.5 Percentage of U.S. Households with Computers, Internet Access, and High-Speed Access at Home…… 2-14
Table 2.9 Percent of U.S. Households with Internet Connections at Home: Rural vs. Urban…… 2-15
Chart 2.6 Percent of U.S. Households with Internet Connections at Home: Rural vs. Urban…… 2-15

Consumer Expenditures…… 3-1

Table 3.1 Household Expenditures for Telephone Service…… 3-3
Table 3.2 Average Monthly Household Telecommunications Expenditures by Type of Provider…… 3-4
Table 3.3 Personal Consumption Expenditures…… 3-5
Table 3.4 Personal Consumption Expenditures Per Household Per Month…… 3-6
Chart 3.1 Personal Consumption Expenditures for Telephone Service and Internet Access…… 3-7
Chart 3.2 Monthly Personal Consumption Expenditures for Telephone Service per Household…. 3-7

Earnings **4-1**

Table 4.1 Interstate Rate of Return Summary: Years 2000 through 2008 4-3

Employment and Labor Productivity **5-1**

Table 5.1 Average Number of Employees in the Telecommunications Industry 5-3
Chart 5.1 Average Number of Employees in the Telecommunications Industry 5-3
Table 5.2 Labor Productivity Index for the Wired and Wireless Telecommunications Industry 5-4
Chart 5.2 Wired and Wireless Telecommunications Carriers (NAICS 5171 and 5172) Labor Productivity Index 5-4
Table 5.3 Number of Telecommunications Service Providers by Size of Business 5-5

International Telephone Service **6-1**

Table 6.1 International Service from the United States 6-3
Chart 6.1 Billed Revenues per Minute and per Call 6-3
Table 6.2 International Telephone Service Settlements 6-4
Table 6.3 International Message Telephone Service for 2008 6-5
Chart 6.2 U.S. Billed Minutes by Country for 2008 6-5
Table 6.4 U.S. Billed Revenues of Facilities-Based and Facilities-Resale Carriers in 2008..... 6-6
Table 6.5 Top Providers of Pure Resale International MTS in 2008 6-7

Lines **7-1**

Table 7.1 Total U.S. Wireline Telephone Lines 7-3
Table 7.2 Telephone Loops of Incumbent Local Exchange Carriers by State: 2007 & 2008 7-4
Table 7.3 Telephone Loops of Incumbent Local Exchange Carriers by Holding Company: 2007 & 2008..... 7-6
Chart 7.1 Five Largest Holding Companies' Share of Loops for 2007 7-6
Chart 7.2 Five Largest Holding Companies' Share of Loops for 2008 7-7
Table 7.4 Additional Residential Lines for Households with Telephone Service 7-8
Table 7.5 Number of Payphones Owned by LECs and Independent Operators: 2008 & 2009 7-9
Table 7.6 Number of Payphones Over Time 7-11

Local Telephone Competition **8-1**

Table 8.1 End-User Switched Access Lines and VoIP Subscriptions 8-5
Chart 8.1 End-User Switched Access Lines and VoIP Subscriptions 8-5
Table 8.2 End-User Switched Access Lines and VoIP Subscriptions by Customer Type 8-6
Chart 8.2 Percent of Lines and VoIP Subscriptions that Serve Residential Customers 8-6

Table 8.3 End-User Switched Access Lines and VoIP Subscriptions Reported by Non-ILECs … 8-7
Chart 8.3 Non-ILEC End-User Switched Access Lines and VoIP Subscriptions …… 8-7
Table 8.4 ILEC End-User (Retail) and Wholesale Switched Access Lines, VoIP Subscriptions, and UNEs…… 8-8
Chart 8.4 ILEC Total Lines and the Percent Provided to CLECs …… 8-8
Table 8.5 Total End-User Switched Access Lines and VoIP Subscriptions by State …… 8-9
Table 8.6 Residential End-User Switched Access Lines and VoIP Subscriptions by State …… 8-10
Table 8.7 Business End-User Switched Access Lines and VoIP Subscriptions by State ……. 8-11
Table 8.8 Non-ILEC Share of Total End-User Switched Access Lines and VoIP Subscriptions by State…… 8-12
Table 8.9 Nationwide Local Service Revenues and New Competitors' Share…… 8-13
Table 8.10 Telephone Number Porting Activity Since Wireless Pooling Started …… 8-15
Table 8.11 Telephone Numbers Remaining in the Porting Database at the End of Each Quarter … 8-16
Table 8.12 Numbers in the Porting Database by Quarter in Which They Were Most Recently Ported…… 8-17

Long Distance Telephone Industry…… 9-1

Table 9.1 Toll Revenues by Provider …….. 9-5
Table 9.2 Intrastate, Interstate, and International Toll Revenues …… 9-7
Chart 9.1 Toll Revenues by Market Segment …… 9-7
Table 9.3 End-User Toll Revenues …… 9-8
Table 9.4 Number of Toll Service Providers …… 9-9
Table 9.5 Residential Household Market Shares: 1995-2008 …… 9-10
Chart 9.2 Residential Household Market Shares: 2008 …… 9-10
Table 9.6 Residential Household Market Shares by Region: 2008 …… 9-12
Chart 9.3 Residential Household Market Shares by Region: 2008 …… 9-12
Table 9.7 Regional Bell Operating Companies'Applications to Provide In-Region InterLATA Service …… 9-14

Minutes …… 10-1

Table 10.1 Interstate Switched Access Minutes for Incumbent Local Exchange Carriers …… 10-3
Chart 10.1 Interstate Switched Access Minutes for Incumbent Local Exchange Carriers …… 10-3
Table 10.2 Telephone Calls and Billed Access Minutes of Large ILECs Reporting to the Commission ……..…….. 10-4

Mobile Wireless Service …… 11-1

Table 11.1 Measures of Mobile Wireless Telephone Subscribers…… 11-3
Chart 11.1 Mobile Wireless Telephone Subscribers …….. 11-4
Table 11.2 Mobile Wireless Telephone Subscribers …… 11-5
Table 11.3 Mobile Wireless Telephone Service: Industry Survey Results …… 11-6
Table 11.4 Distribution of Residential Wireless Calls and Minutes …… 11-7
Table 11.5 Duration of Residential Wireless Calls: 2008 …… 11-8
Table 11.6 Distribution of Residential Intrastate Wireless Minutes by Day and Time: 2006-2008 . 11-9
Table 11.7 Distribution of Residential Interstate Wireless Minutes by Day and Time: 2006-2008 . 11-10

Price Indices for Telephone Services 12-1

Table 12.1 Long-Term Changes for Various Price Indices (Annual Rates of Change) 12-3
Chart 12.1 CPI All Items and CPI Telephone Services 12-3
Table 12.2 Annual Changes in Major Price Indices 12-4
Chart 12.2 Percent Change in CPI All Items and CPI Telephone Services 12-4
Table 12.3 Annual Changes in Price Indices for Local and Long Distance Telephone Services 12-5
Chart 12.3 CPI Telephone Service Price Indices 12-5

Price Levels 13-1

Table 13.1 Average Residential Rates for Local Service in Urban Areas: 1995-2007 13-3
Table 13.2 Average Local Rates for Businesses with a Single Line In Urban Areas: 1995-2007 13-4
Table 13.3 Average Rate for a Residential Access Line 13-5
Table 13.4 Average Revenue Per Minute 13-6
Chart 13.1 Revenue Per Minute for Interstate Calls 13-7

Residential Wireline Usage 14-1

Table 14.1 Distribution of Residential Wireline Toll Calls and Minutes 14-3
Table 14.2 Average Residential Wireline Monthly Toll Minutes 14-3
Table 14.3 Distribution of Residential Wireline Long Distance Call Durations: 2008 14-4
Table 14.4 Duration and Distance of Intrastate Toll Calls 14-5
Table 14.5 Duration and Distance of Interstate Toll Calls 14-5
Table 14.6 Distribution of Residential Wireline Long Distance Minutes by Day and Time..... 14-6

Revenues 15-1

Table 15.1 Telecommunications Industry Revenues 15-3
Chart 15.1 End-User Telecommunications Revenues 15-3
Table 15.2 Telecommunications Revenues Reported by Type of Service 15-4
Table 15.3 Number of Interstate Telecommunications Providers By Principal Type of Business .. 15-5
Table 15.4 Gross Revenues Reported by Type of Carrier 15-6
Table 15.5 Total Telecommunications Revenues by State 15-7
Table 15.6 Telecommunications Revenues by State: 2007 15-8
Table 15.7 Telecommunications Revenues by Type of Service: 2007 15-9

Subscribership 16-1

Table 16.1 Household Telephone Subscribership in the United States 16-3
Table 16.2 Historical Telephone Penetration Estimates 16-4
Table 16.3 Telephone Penetration by State: Households with Telephone Service 16-5
Table 16.4 Telephone Penetration by State: Houseing Units with Telephone Service 16-6
Table 16.5 Telephone Penetration by Selected Characteristics 16-7

Technology and Infrastructure…… 17-1

Table 17.1 Central Office Switches and Access Lines by Technology ……. 17-5
Table 17.2 Switches by Metropolitan Statistical Area (MSA) and Non-MSA and Switches by Line Counts ……. 17-6
Table 17.3 Local Transmission Technology (Bell Operating Companies) and Working Telecommunications Channels …… 17-7
Table 17.4 Central Offices Converted to Equal Access (As of February 1, 2010) ……..…… 17-8
Table 17.5 Broadband Capabilities of NECA's 2007 Rural Incumbent LEC Survey Respondents … 17-9
Chart 17.1 Telecommunications Patents ……..……..…… 17-10
Table 17.6 Capital Expenditures for Structures and Equipment …… 17-11
Chart 17.2 Capital Expenditures for Structures and Equipment by Carriers ……..…… 17-12

Telephone Numbers …… 18-1

Table 18.1 Geographic Telephone Number Utilization over Time…… 18-3
Table 18.2 Number Utilization by Carrier Type …… 18-3
Table 18.3 Telephone Number Utilization by State …… 18-4
Table 18.4 Area Codes by State …… 18-5
Table 18.5 Area Code Assignments …… 18-6
Table 18.6 Telephone Numbers Assigned for Toll-Free Service (800, 888, 877, 866) …… 18-8
Chart 18.1 Working Toll-Free Numbers ……. 18-8
Table 18.7 Telephone Numbers Assigned for Toll-Free Service 800 Toll-Free Service ……...… 18-9
Table 18.8 Telephone Numbers Assigned for 888 Toll-Free Service …… 18-10
Table 18.9 Telephone Numbers Assigned for 877 Toll-Free Service …… 18-11
Table 18.10 Telephone Numbers Assigned for 866 Toll-Free Service …… 18-12
Table 18.11 Number of Digits Necessary to Dial Local and Toll Calls in the U.S. …… 18-13

Universal Service …….. 19-1

Table 19.1 Universal Service Support Mechanisms: 2007 & 2008 …… 19-5
Chart 19.1 Distribution of Universal Service Payments: 2008 …… 19-5
Table 19.2 Universal Service Support Received by Service Provider: 2008 …… 19-6
Chart 19.2 Universal Service Support Received by Service Provider: 2008 …… 19-6
Table 19.3 High-Cost Support Fund Payment History …… 19-7
Chart 19.3 Total High-Cost Support Fund Payments ..…… 19-7
Table 19.4 High-Cost Support Fund Payments by State: 2007 & 2008…… 19-8
Table 19.5 High-Cost Support Received by Incumbent LECs and CETCs ……...… 19-10
Chart 19.4 Percent of High-Cost Support Received by CETCs …… 19-10
Table 19.6 High-Cost Support by Type of Carriers: 2008 …… 19-11
Table 19.7 Lifeline Monthly Support by State or Jurisdiction …… 19-12
Table 19.8 Lifeline Subscribers and Link-Up Beneficiaries ……..…… 19-13
Table 19.9 Lifeline Subscribers and Link-Up Beneficiaries by State or Jurisdiction: 2007 & 2008 . 19-14
Table 19.10 Low-Income Support Payments …… 19-16
Chart 19.5 Lifeline and Link-Up Support Payments …… 19-16
Table 19.11 Low-Income Support Payments by State or Jurisdiction: 2007 & 2008 …… 19-17
Table 19.12 Low-Income Support Received by ILECs and CETCs ……..……..…… 19-19
Chart 19.6 Percent of Low-Income Support Received by CETCs ….…… 19-19

Table 19.13 Schools and Libraries Funding by Type of Service 19-20
Chart 19.7 Total Schools and Libraries Funds Committed and Disbursed 19-20
Table 19.14 Schools and Libraries Funding by State and Type of Service 19-21
Table 19.15 Rural Health Care Fund Disbursements by Service Speed 19-22
Chart 19.8 Rural Health Care Fund Disbursements by Service Speed 19-22
Table 19.16 Rural Health Care Fund Disbursements by Service Speed and by State 19-23
Table 19.17 Universal Service Fund Contribution Factors 19-24
Table 19.18 Share of Universal Service Contributions by Principal Type of Contributor Using Traditional Carrier Categories 19-25
Chart 19.9 Share of Universal Service Contributions by Principal Type of Contributor 19-26

Appendix A - List of Publications by the Industry Analysis and Technology Division 20-A

Appendix B - Sources of Telecommunications Information 21-A

Appendix C - Contacting the Report Authors 22-A

Introduction

Trends in Telephone Service is published by the Industry Analysis and Technology Division of the Federal Communication Commission's Wireline Competition Bureau.[1] This report is designed to provide answers to some of the most frequently asked questions about the telephone industry -- questions asked by consumers, members of Congress, other government agencies, telecommunications carriers, and members of the business and academic communities. To this end, the report contains summary information about the size, growth, and development of the telephone industry, including data on market shares, minutes of calling, number of lines, and telephone subscribership. The report also provides information about access charges, advanced telecommunications, consumer expenditures for service, infrastructure, international telephone traffic, local telephone competition, telephone rates and price changes, toll service providers, and universal service support.

Trends in Telephone Service summarizes a variety of information contained in other reports that are published periodically by the Industry Analysis and Technology Division.[2] In most cases, these other reports provide more detailed information than that provided here. These reports can be accessed from the Wireline Competition Bureau Statistical Reports Internet site, at www.fcc.gov/wcb/stats. In addition, to facilitate further information gathering by consumers and others, we have listed additional sources of information in Appendix B, and we have provided information on contacting the authors of this report in Appendix C.

1 Access Charges

Long distance companies rely on the loops, switches, and transport facilities of local telephone companies for access to their customers. As a result, local telephone companies recover a portion of their costs from long distance companies accessing their networks. Both the manner in which these access charges have been assessed and the proportion of the costs they have recovered have varied considerably over time.

In the early 1980s, AT&T provided about three-quarters of the nation's local telephone service and almost all interstate long distance service. Because revenue sharing was largely an internal process for AT&T, it was able to charge prices above true economic cost for long distance calls and share the revenues with local telephone companies. These transfers, while reducing the pressures on the local companies to raise monthly rates, contributed to inefficiently high long distance rates. The high rates were responsible for suppressing demand for long distance calls and inducing large corporations to bypass the public switched network. Moreover, while such revenue sharing arrangements were sustainable in an industry where one firm monopolized both long distance and local service, they were not compatible with a competitive

[1] *Trends in Telephone Service* was last published in August 2008.

[2] See Appendix A for a list of these publications.

long distance industry.

In mid-1984 the FCC, in cooperation with a Federal-State Joint Board composed of both federal and state regulators, introduced sweeping changes in the way that local telephone companies charged for their services. The historic method of sharing revenues was replaced with a new system of access charges that provided a uniform method for local telephone companies to charge long distance carriers for the origination and termination of interstate traffic on their local networks. In addition, monthly subscriber line charges (SLCs) were introduced to recover a portion of the fixed costs of the local telephone companies' loops directly from end users on a per-line basis. Since local telephone companies were required to reduce their charges to long distance carriers -- dollar for dollar -- as SLCs were introduced, the pricing changes reduced the implicit subsidy from long distance use to local service. The rebalancing of prices between local service and interstate long distance calls during the 1980s had a fundamental impact on the telephone industry as the price of long distance service fell and the volume of long distance calling surged.

In mid-1997, as part of its implementation of the 1996 Telecommunications Act, the FCC introduced further interstate access charge reform. Prior to the 1997 reform, local carriers continued to recover part of their fixed costs in per-minute charges (from long distance carriers) and part from end users (in SLCs.) Presubscribed interexchange carrier charges (PICCs) were created in order to allow local carriers to recover the remaining portion of their fixed loop costs from long distance carriers on a per-line, instead of a per-minute, basis.

As part of access charge reform in May of 2000, the FCC started to eliminate PICCs and consolidate them with SLCs. All price-cap local exchange carriers implemented lower access charges paid by long distance carriers. In October of 2001, the FCC modified its interstate access charge rules for rate-of-return incumbent local exchange carriers. These changes for the rate-of-return carriers were designed to align the interstate access rate structure more closely with the manner in which costs are incurred by driving per-minute access charges towards lower, more cost-based levels.

Average monthly SLCs and PICCs are shown in Table 1.1, and average per-minute rates charged to long distance carriers are shown in Table 1.2. Both tables report historical averages for all local exchange carriers (LECs) that file access tariffs subject to price-cap regulation and all LECs in the National Exchange Carrier Association (NECA) pool. Current per-line charges and per-minute charges are reported for each of the carriers in Tables 1.3 and 1.4, respectively.

PUBLIC VERSION

Table 1.1
Interstate Per-Line Access Charges [1]

Rates in Effect		Charged to End Users [2] (Subscriber Line Charges)			Charged to Long Distance Carriers [3] (Presubscribed Interexchange Carrier Charges)			
From	To	Residential and Single-Line Business	Non-Primary Residential	Multiline Business and Centrex	Residential and Single-Line Business	Non-Primary Residential	Multiline Business	Centrex
05/26/84	05/31/85	$0.00		$4.99				
06/01/85	09/30/85	1.00		4.99				
10/01/85	05/31/86	1.00		4.97				
06/01/86	12/31/86	2.00		4.97				
01/01/87	06/30/87	2.00		5.12				
07/01/87	12/31/87	2.60		5.12				
01/01/88	11/30/88	2.60		5.01				
12/01/88	03/31/89	3.20		5.01				
04/01/89	12/31/89	3.50		4.94				
01/01/90	06/30/90	3.48		4.84				
07/01/90	12/31/90	3.48		4.83				
01/01/91	06/30/91	3.48		4.77				
07/01/91	11/27/91	3.49		4.74				
11/28/91	06/30/92	3.49		4.76				
07/01/92	06/30/93	3.49		4.68				
07/01/93	06/30/94	3.50		5.37				
07/01/94	06/30/95	3.50		5.45				
07/01/95	06/30/96	3.50		5.50				
07/01/96	06/30/97	3.50		5.53				
07/01/97	12/31/97	3.50		5.68				
01/01/98	06/30/98	3.50	$4.98	6.92	$0.49	$1.50	$2.52	$0.35
07/01/98	12/31/98	3.50	4.99	7.11	0.49	1.38	2.38	0.38
01/01/99	06/30/99	3.50	5.88	7.05	0.49	1.38	2.22	0.32
07/01/99	12/31/99	3.50	5.84	6.94	0.95	1.77	2.78	0.42
01/01/00	06/30/00	3.50	5.81	6.94	0.92	1.70	2.44	0.35
08/11/00	06/30/01 [4]	4.28	5.99	6.88	0.00	0.00	2.30	0.37
07/01/01	12/31/01	4.78	5.93	6.66	0.00	0.00	1.35	0.22
01/01/02	06/30/02	4.92	5.93	6.79	0.00	0.00	1.35	0.22
07/01/02	06/30/03	5.62	5.88	6.45	0.00	0.00	0.48	0.08
07/01/03	06/30/04	5.96	5.94	6.37	0.00	0.00	0.20	0.04
07/01/04	06/30/05	5.92	5.85	6.24	0.00	0.00	0.19	0.05
07/01/05	06/30/06	5.92	5.83	6.26	0.00	0.00	0.21	0.04
07/01/06	06/30/07	5.91	5.81	6.27	0.00	0.00	0.23	0.04
07/01/07	06/30/08	5.93	5.81	6.30	0.00	0.00	0.23	0.05
07/01/08	06/30/09	5.90	5.78	6.27	0.00	0.00	0.22	0.05
07/01/09	06/30/10	5.88	5.75	6.21	0.00	0.00	0.18	0.04

[1] This table shows average rates (weighted by access lines) for all local exchange carriers (LECs) that file access tariffs subject to price-cap regulation and all LECs in the National Exchange Carrier Association (NECA) pool.

[2] Prior to 1/01/1998, carriers did not charge separate subscriber line charge (SLC) rates for primary and non-primary residential lines. Therefore, the residential and single-line business average SLCs reported prior to 1/01/1998 include all residential SLC charges. The average residential and single-line business SLC rate as of 1/01/98 excludes non-primary residential SLCs. Non-primary SLCs are now reported separately, except for the LECs in the NECA pool, which continue to charge a single residential SLC. Under price-cap regulation, as of 7/1/2003, the caps on SLCs for primary residential and single-line business, non-primary residential, and multiline business and Centrex lines equal $6.50, $7.00, and $9.20, respectively. For NECA pool companies, the residential SLC cap is $6.50, while the multiline business and Centrex SLC cap equals $9.20.

[3] On 1/01/98, price-cap carriers began to charge presubscribed interexchange carrier charges (PICCs). The reported PICCs are averages per line including both price-cap and NECA pool lines. While carriers did not charge different rates for Centrex and multiline business SLCs, they did charge different PICC rates for these lines. Therefore, the average multiline business and Centrex PICC rates are reported separately. However, multiline business line counts, used to compute average PICC rates, include Centrex lines for LECs in the NECA pool, which do not charge PICCs or distinguish in access filings between the two line types. On 7/01/2000, residential and single-line business PICCs was eliminated. Since then the PICCs cap for multiline business lines equal $4.31 for price cap carriers. Centrex groups of 9 or fewer lines are capped at the multiline business PICC rate of $4.31 per group. Centrex groups with more than 9 lines are capped at $0.48 per line (1/9th the multiline business rate).

[4] Although the charges took effect on 7/1/2000, some companies made adjustments to the tariffs which did not take effect until 8/11/2000.

Source: Access tariff filings.

PUBLIC VERSION

Table 1.2
Interstate Per-Minute Access Charges
(National Average in Cents per Minute) [1]

Rates in Effect		Interstate Charges for Switched Access Service				
From	To	Carrier Common Line per Originating Access Minute [1]	Carrier Common Line per Terminating Access Minute [1]	Traffic Sensitive per Switched Minute	Non-Traffic Sensitive per Switched Minute [2]	Total Charge per Conversation Minute [3]
05/26/84	01/14/85	5.24 ¢	5.24 ¢	3.10 ¢		17.26 ¢
01/15/85	05/31/85	5.43	5.43	3.10		17.66
06/01/85	09/30/85	4.71	4.71	3.10		16.17
10/01/85	05/31/86	4.33	4.33	3.10		15.38
06/01/86	12/31/86	3.04	4.33	3.10		14.00
01/01/87	06/30/87	1.55	4.33	3.10		12.41
07/01/87	12/31/87	0.69	4.33	3.10		11.49
01/01/88	11/30/88	0.00	4.14	3.10		10.56
12/01/88	02/14/89	0.00	3.39	3.00		9.60
02/15/89	03/31/89	0.00	3.25	3.00		9.46
04/01/89	12/31/89	1.00	1.83	3.00		9.11
01/01/90	06/30/90	1.00	1.53	2.50		7.78
07/01/90	12/31/90	1.00	1.23	2.50		7.48
01/01/91	06/30/91	1.00	1.14	2.40		7.18
07/01/91	06/30/92	0.88	1.06	2.40		6.97
07/01/92	06/30/93	0.79	0.95	2.40		6.76
07/01/93	06/30/94	0.88	1.16	2.20		6.66
07/01/94	06/30/95	0.84	1.08	2.10	0.28 ¢	6.89
07/01/95	06/30/96	0.74	0.89	1.96	0.21	6.16
07/01/96	06/30/97	0.72	0.89	1.95	0.17	6.04
07/01/97	12/31/97	0.64	0.84	1.63	0.14	5.18
01/01/98	06/30/98	0.68	0.23	1.29	0.21	4.04
07/01/98	12/31/98	0.91	0.20	0.99	0.30	3.82
01/01/99	06/30/99	0.82	0.16	0.98	0.32	3.71
07/01/99	12/31/99	0.37	0.10	0.86	0.28	2.82
01/01/00	06/30/00	0.32	0.10	0.86	0.31	2.85
08/11/00	06/31/00 [4]	0.23	0.07	0.52	0.26	1.91
07/01/01	12/31/01	0.15	0.07	0.48	0.24	1.71
01/01/02	06/30/02	0.15	0.07	0.47	0.24	1.69
07/01/02	06/30/03	0.02	0.01	0.48	0.22	1.46
07/01/03	06/30/04	0.00	0.00	0.48	0.22	1.44
07/01/04	06/30/05	0.00	0.00	0.50	0.25	1.53
07/01/05	06/30/06	0.00	0.00	0.52	0.25	1.59
07/01/06	06/30/07	0.01	0.00	0.54	0.25	1.63
07/01/07	06/30/08	0.01	0.00	0.56	0.26	1.71
07/01/08	06/30/09	0.01	0.00	0.63	0.24	1.80
07/01/09	06/30/10	0.00	0.00	0.64	0.26	1.85

[1] This table shows average rates (weighted by minutes of use) for all local exchange carriers (LECs) that file access tariffs subject to price-cap regulation and all LECs in the National Exchange Carrier Association (NECA) pool. The average rates reported here do not include revenues from subscriber line charges (SLCs) or primary interexchange carrier charges (PICCs), both of which are reported in Table 1.1. Effective 07/01/03, the carrier common line (CCL) rates for NECA carriers were eliminated.

[2] Non-traffic-sensitive charges include charges assessed on a per-month, per-unit basis. Prior to 07/01/94, these charges were included in the average traffic-sensitive rates.

[3] The total charge per conversation minute consists of charges on the originating end of the call, which are adjusted for dialing and call setup time, plus charges on the terminating end. Originating charges per conversation minute equal the carrier common line charge per originating access minute plus the traffic-sensitive charge per switched minute, both multiplied by 1.07 to account for dialing and call setup time, plus the non-traffic-sensitive charge per switched minute. Terminating charges per conversation minute equal carrier common line charges per terminating access minute plus both traffic-sensitive and non-traffic-sensitive charges per switched minute.

[4] Although the charges took effect on 7/1/2000, some companies made adjustments to the tariffs which did not take effect until 8/11/2000.

Source: Access tariff filings.

PUBLIC VERSION

Table 1.3
Interstate Per-Line Access Charges by Carrier
(In Dollars per Month per Line) [1]

Company	Rates Effective from 07/01/09 to 06/30/10					2008 Average Monthly Access Lines [3] (Thousands)		
	Subscriber Line Charges			PICC [2]				
	Residential and Single-Line Business	Non-Primary Residential	Multiline Business and Centrex	Multiline Business	Centrex	Residential and Single-Line Business	Non-Primary Residential	Multiline Business and Centrex
ACS	$6.50	NA	$9.20	$0.00	$0.00	49	0	24
América Móvil	6.50	6.50	9.20	0.00	0.00	687	1	172
AT&T	5.47	5.26	5.41	0.00	0.00	31,552	3,570	17,938
CenturyTel	5.67	5.47	7.17	0.05	0.06	4,934	348	1,694
Cincinnati Bell	5.28	5.28	5.28	0.00	0.00	466	31	259
Consolidated	6.50	6.50	9.20	0.00	0.00	136	6	55
FairPoint	6.23	6.23	6.23	0.00	0.00	835	54	320
Frontier	6.17	6.53	9.20	3.87	0.74	1,288	58	436
Hawaiin Telecom	6.50	7.00	8.15	0.00	0.00	365	35	90
Iowa Telecom	5.89	5.89	8.09	0.00	0.00	155	5	43
Pacific Telecom Inc.	6.50	7.00	9.20	0.71	0.11	11	0	4
Qwest	5.99	6.20	6.38	0.00	0.00	6,619	636	2,731
Verizon	6.27	6.29	6.76	0.45	0.06	20,585	2,388	10,959
Windstream	6.29	6.46	7.50	0.12	1.32	1,523	224	534
Price Caps	5.83	5.75	6.11	0.19	0.04	69,205	7,358	35,260
NECA	6.50	NA	9.20	0.00	NA	4,788	NA	1,213
Price Caps and NECA	$5.88	$5.75	$6.21	$0.18	$0.04	73,993	7,358	36,472

NA - Not Applicable.

[1] This table shows average rates (weighted by access lines) for all local exchange carriers (LECs) that file access tariffs subject to price-cap regulation and all LECs in the National Exchange Carrier Association (NECA) pool. Rates are composites of all regions and subsidiaries of each local exchange carrier. For example, non-primary residential SLCs can be less than primary residential SLCs due to weighting by access lines. Note that at the disaggregated level, non-primary rates are always greater than or equal to primary rates. The primary line rate is weighted by the number of primary residential lines and the non-primary residential rate is similarly weighted by the number of non-primary access lines. Because the weight on primary lines versus non-primary lines is not constant, the primary rate is not necessarily lower than the non-primary rate at the holding company level. No information is available for those carriers that are not in the NECA pool, but are subject to rate-of-return regulation.

[2] PICC is an abbreviation for Presubscribed Interexchange Carrier Charge.

[3] Access line counts measure lines that companies report as qualified to receive subscriber line charges (SLCs). ISDN-BRI lines, which are charged non-primary SLC and PICC rates, are included in the non-primary residential line counts. ISDN-PRI lines, which are charged rates equal to five times the multiline business SLC and PICC rates, are multiplied by five and added to multiline business counts.

Source: Access tariff filings.

PUBLIC VERSION

Table 1.3
Interstate Per-Line Access Charges by Carrier -- Continued
(In Dollars per Month per Line) [1]

Company	Rates Effective from 07/01/08 to 06/30/09					2007 Average Monthly Access Lines [3] (Thousands)		
	Subscriber Line Charges			PICC [2]				
	Residential and Single-Line Business	Non-Primary Residential	Multiline Business and Centrex	Multiline Business	Centrex	Residential and Single-Line Business	Non-Primary Residential	Multiline Business and Centrex
América Móvil	$6.50	$6.50	$9.20	$0.00	$0.00	777	2	193
AT&T	5.48	5.30	5.45	0.00	0.00	34,451	4,099	18,699
CenturyTel [4]	6.37	6.58	7.55	0.82	1.19	407	17	116
Cincinnati Bell	5.27	5.27	5.27	0.00	0.00	522	36	260
Consolidated	6.50	6.50	9.20	0.00	0.00	148	8	57
Embarq	5.66	5.55	6.95	0.00	0.00	4,349	375	1,502
FairPoint	6.25	6.25	6.25	0.00	0.00	930	72	333
Frontier	6.47	6.95	9.20	4.27	0.79	1,171	57	365
Hawaiian Telecom	6.50	7.00	8.15	0.00	0.00	405	39	94
Iowa Telecom	6.16	6.16	8.41	0.00	0.00	168	6	46
Pacific Telecom Inc.	6.50	7.00	9.20	1.33	0.20	15	1	3
Qwest	6.02	6.26	6.53	0.00	0.00	7,322	755	2,863
Verizon	6.29	6.31	6.80	0.55	0.07	22,306	2,804	11,703
Windstream	6.36	6.48	7.69	0.50	0.73	1,566	93	583
Price Caps	5.85	5.78	6.15	0.23	0.05	74,538	8,364	36,817
NECA	6.50	NA	9.14	0.00	NA	6,388	NA	1,621
Price Caps and NECA	$5.90	$5.78	$6.27	$0.22	$0.05	80,926	8,364	38,437

NA - Not Applicable.

[1] This table shows average rates (weighted by access lines) for all local exchange carriers (LECs) that file access tariffs subject to price-cap regulation and all LECs in the National Exchange Carrier Association (NECA) pool. Rates are composites of all regions and subsidiaries of each local exchange carrier. For example, non-primary residential SLCs can be less than primary residential SLCs due to weighting by access lines. Note that at the disaggregated level, non-primary rates are always greater than or equal to primary rates. The primary line rate is weighted by the number of primary residential lines and the non-primary residential rate is similarly weighted by the number of non-primary access lines. Because the weight on primary lines versus non-primary lines is not constant, the primary rate is not necessarily lower than the non-primary rate at the holding company level. No information is available for those carriers that are not in the NECA pool, but are subject to rate-of-return regulation.

[2] PICC is an abbreviation for Presubscribed Interexchange Carrier Charge.

[3] Access line counts measure lines that companies report as qualified to receive subscriber line charges (SLCs). ISDN-BRI lines, which are charged non-primary SLC and PICC rates, are included in the non-primary residential line counts. ISDN-PRI lines, which are charged rates equal to five times the multiline business SLC and PICC rates, are multiplied by five and added to multiline business counts.

[4] Data reflect only those company study areas subject to price-cap regulation.

Source: Access tariff filings.

PUBLIC VERSION

Table 1.4
Interstate Per-Minute Access Charges by Carrier
(In Cents per Minute) [1]

Company	Rates Effective from July 1, 2009 to June 30, 2010					Year 2008 Local Switching Minutes of Use (Millions)
	Carrier Common Line per Originating Access Minute	Carrier Common Line per Terminating Access Minute	Switched Traffic Sensitive per Access Minute	Switched Non-Traffic Sensitive per Access Minute [2]	Total Charge per Conversation Minute [3]	
ACS	0.00 ¢	0.00 ¢	0.56 ¢	0.12 ¢	1.39 ¢	236
América Móvil	0.00	0.00	0.90	0.22	2.29	2,029
AT&T	0.00	0.00	0.49	0.24	1.50	135,647
CenturyTel	0.01	0.00	0.85	0.21	2.18	20,102
Cincinnati Bell	0.00	0.00	0.66	0.55	2.47	2,170
Consolidated	0.00	0.00	1.33	0.35	3.46	456
FairPoint	0.00	0.00	0.51	0.28	1.62	3,421
Frontier	0.19	0.00	0.50	0.58	2.40	4,567
Hawaiian Telecom	0.00	0.00	0.63	0.38	2.06	996
Iowa Telecom	0.00	0.00	1.48	0.78	4.62	445
Pacific Telecom Inc.	0.00	0.00	0.49	0.17	1.35	48
Qwest	0.00	0.00	0.79	0.20	2.03	30,733
Verizon	0.00	0.00	0.55	0.26	1.64	86,668
Windstream	0.00	0.00	0.62	0.25	1.78	6,084
Price Caps	0.00	0.00	0.57	0.25	1.69	293,601
NECA	0.00	0.00	2.30	0.47	5.71	12,355
All Price Caps and NECA	0.00	0.00	0.64	0.26	1.85	305,956

[1] This table shows average rates (weighted by minutes of use) for all local exchange carriers (LECs) that file access tariffs subject to price-cap regulation and all LECs in the National Exchange Carrier Association (NECA) pool. Rates are composites of all regions and subsidiaries of each local exchange carrier. No information is available for those carriers that are not in the NECA pool, but are subject to rate-of-return regulation. The average rates reported here do not include the average revenue per minute from subscriber line charges (SLCs) or primary interexchange carrier charges (PICCs), both of which are reported in Table 1.1.

[2] Non-traffic sensitive charges include charges assessed on a per-month, per-unit basis.

[3] The total charge per conversation minute consists of charges on the originating end of the call, which are adjusted for dialing and call setup time, plus charges on the terminating end. Originating charges per conversation minute equal the carrier common line charge per originating access minute plus the traffic-sensitive charge per switched minute, both multiplied by 1.07 to account for dialing and call setup time, plus the non-traffic-sensitive charge per switched minute. Terminating charges per conversation minute equal carrier common line charges per terminating access minute plus both traffic-sensitive and non-traffic-sensitive charges per switched minute.

Source: Access tariff filings.

PUBLIC VERSION

Table 1.4
Interstate Per-Minute Access Charges by Carrier -- Continued
(In Cents per Minute) [1]

Company	Rates Effective from July 1, 2008 to June 30, 2009					Year 2007 Local Switching Minutes of Use (Millions)
	Carrier Common Line per Originating Access Minute	Carrier Common Line per Terminating Access Minute	Switched Traffic Sensitive per Access Minute	Switched Non-Traffic Sensitive per Access Minute [2]	Total Charge per Conversation Minute [3]	
América Móvil	0.00 ¢	0.00 ¢	0.97 ¢	0.28 ¢	2.56 ¢	2,210
AT&T	0.00	0.00	0.49	0.24	1.50	147,141
CenturyTel [4]	0.10	0.00	0.49	0.28	1.69	1,638
Cincinnati Bell	0.00	0.00	0.63	0.46	2.24	2,553
Consolidated	0.00	0.00	1.29	0.40	3.47	470
Embarq	0.00	0.00	0.89	0.18	2.20	18,574
FairPoint	0.00	0.00	0.48	0.27	1.53	3,989
Frontier	0.28	0.01	0.49	0.53	2.39	4,212
Hawaiian Telecom	0.00	0.00	0.60	0.48	2.20	1,221
Iowa Telecom	0.00	0.00	1.63	0.82	5.00	485
Pacific Telecom Inc.	0.00	0.00	0.54	0.14	1.40	51
Qwest	0.00	0.00	0.77	0.18	1.95	33,755
Verizon	0.02	0.00	0.52	0.23	1.57	100,522
Windstream	0.00	0.00	0.56	0.25	1.66	6,101
Price Caps	0.01	0.00	0.56	0.23	1.64	322,923
NECA	0.00	0.00	2.06	0.39	5.04	15,125
All Price Caps and NECA	0.01	0.00	0.63	0.24	1.80	338,049

[1] This table shows average rates (weighted by minutes of use) for all local exchange carriers (LECs) that file access tariffs subject to price-cap regulation and all LECs in the National Exchange Carrier Association (NECA) pool. Rates are composites of all regions and subsidiaries of each local exchange carrier. No information is available for those carriers that are not in the NECA pool, but are subject to rate-of-return regulation. The average rates reported here do not include the average revenue per minute from subscriber line charges (SLCs) or primary interexchange carrier charges (PICCs), both of which are reported in Table 1.1.

[2] Non-traffic sensitive charges include charges assessed on a per-month, per-unit basis.

[3] The total charge per conversation minute consists of charges on the originating end of the call, which are adjusted for dialing and call setup time, plus charges on the terminating end. Originating charges per conversation minute equal the carrier common line charge per originating access minute plus the traffic-sensitive charge per switched minute, both multiplied by 1.07 to account for dialing and call setup time, plus the non-traffic-sensitive charge per switched minute. Terminating charges per conversation minute equal carrier common line charges per terminating access minute plus both traffic-sensitive and non-traffic-sensitive charges per switched minute.

[4] Data reflect only those company study areas subject to price-cap regulation.

Source: Access tariff filings.

Exhibit 58

Petition for Declaratory Ruling, WC Docket No. 09-152 (filed Aug. 14, 2009)

PUBLIC VERSION

WC 09-152

FILED/ACCEPTED

AUG 14 2009

Federal Communications Commission
Office of the Secretary

Before the
FEDERAL COMMUNICATIONS COMMISSION
Washington, DC 20554

In the Matter of Petition for Declaratory Ruling to the Iowa Utilities Board and Contingent Petition for Preemption	WC Docket No. 09-___

DOCKET FILE COPY ORIGINAL

PETITION FOR DECLARATORY RULING TO THE IOWA UTILITIES BOARD AND CONTINGENT PETITION FOR PREEMPTION

Ross A. Buntrock
Jonathan E. Canis
Adam D. Bowser
Arent Fox LLP
1050 Connecticut Avenue, N.W.
Washington, DC 20036

Counsel to
Great Lakes Communication Corp.
Superior Telephone Cooperative

Dated: August 14, 2009

TABLE OF CONTENTS
(Cont'd)

Page

1. Qwest's requested relief would require the Board to flout the Commission's orders governing interstate terminating access. 21

2. Qwest seeks to prohibit revenue sharing by carriers which stifles both intrastate and interstate competition..... 22

C. It Would Be Impossible to Comply with Established FCC Precedent and The Order That Qwest Is Seeking..... 25

D. The Federal Communications Commission Has Occupied the Field of LEC Access Charges, Regarding Both Current Law and Potential Prospective Changes to that Law 26

E. The Order That Qwest Seeks from the IUB Would Stand As an Obstacle to the Accomplishment and Execution of Federal Law 27

F. Because the Services At Issue Are Overwhelmingly Interstate, the State Interest In this Matter Is *De Minimis* 29

CONCLUSION 30

EXHIBIT A Relevant, public excerpts from the Hearing Transcript in Docket FCU 07-2, Qwest Communications Corp. v. Superior Telephone Cooperative, *et al.* (Iowa Utils. Bd.)

EXHIBIT B Relevant, public orders issued by the Iowa Utilities Board in Docket FCU 07-2, Qwest Communications Corp. v. Superior Telephone Cooperative, *et al.* (Iowa Utils. Bd.)

Great Lakes Communications Corp. and Superior Telephone Cooperative (collectively, the "Petitioners"), by their undersigned counsel and pursuant to 47 C.F.R. § 1.2, hereby submit this Petition for Declaratory Ruling to respectfully request a ruling from the Federal Communications Commission ("Commission") that all matters relating to interstate access charges, including the rates therefor and revenue derived therefrom, are within its exclusive federal jurisdiction and thus any attempts by state authorities to regulate interstate access charges are beyond their authority. In addition, as a contingency against an imminent ruling from the Iowa Utilities Board (the "IUB" or "Board", and the "*IUB Order*") that encroaches on the Commission's jurisdiction, Petitioners respectfully request an order preempting such action under the standard for the federal preemption of state actions discussed in *Louisiana Public Service Commission v F.C.C.* [1]

I. INTRODUCTION

This Petition seeks to ensure that federal jurisdiction over interstate access will be maintained throughout the resolution of many access-charge related actions across the United States. The case most imminently to be decided is the enforcement action before the IUB entitled *Qwest Communications Corp. v. Superior Telephone Cooperative, et al.*, Docket FCU 07-2. That proceeding, which was initiated on the Complaint of Qwest Communications Corporation ("Qwest"),[2] seeks to determine the rights of eight local exchange carriers ("LECs") in Iowa to receive intrastate and interstate terminating access charges for telephone calls.

Qwest's complaint was premised on its assertion that the LECs' termination of calls to conference, chat-line, and in some cases, international service providers constituted "traffic pumping" that is somehow unlawful. The Qwest complaint is just one facet of Qwest's unlawful

---

[1] *Louisiana Public Service Commission v. F.C.C.*, 476 U.S. 355, 368-69 (1986) ("*Louisiana PSC*").

[2] Docket No. FCU-07-2, Complaint, Request for Declaratory Relief and Request for Emergency Injunctive Relief filed with the Iowa Utilities Board on February 20, 2007.

campaign against competing carriers and conference-service providers — a campaign that includes harassing litigation in venues across the country and unlawful self-help refusals to pay access charges — that Qwest and other large interexchange carriers have been conducting for more than three years.

The IUB seems poised to adopt Qwest's arguments and assertions. In this Petition, Petitioners demonstrate that the *IUB Order* is likely to be flatly inconsistent with the rulings and policies of this Commission in areas where this Commission and federal statutes have occupied the field. The *IUB Order* is also likely to be extraordinarily expansive in scope, given the lengths to which Qwest sought to collaterally attack the Commission's holding and analysis in the *Farmers and Merchants* decision.[3] Any order by the IUB that touches, even on a prospective basis, the interstate access rates and revenues of LECs, or the qualification of the LECs for the rural exemption from the benchmark limit under the *CLEC Access Charge Order*,[4] would be in excess of the IUB's jurisdiction. As demonstrated in this Petition, the IUB is jurisdictionally incapable of regulating any more than a *de minimis* portion of the traffic that is the subject of Qwest's complaint. Further, even for that minuscule amount of intrastate traffic, the IUB must conform its ruling so that the LECs can comply simultaneously with the Commission's rules and regulations as well as the *IUB Order*. The Commission must therefore stand at the ready to preempt any order issued out of the IUB that misreads and ignores established Commission precedent and is *ultra vires*, as all indications seem to suggest the forthcoming *IUB Order* will be.

---

[3] *Qwest Commc'ns Corp. v. Farmers and Merchants Mutual Tel, Co.*, Memorandum Opinion and Order, 22 FCC Rcd. 17973 (Oct. 2, 2007) ("*Farmers and Merchants*").

[4] *Access Charge Reform*, CC Docket No. 96-262, Seventh Report and Order and Further Notice of Proposed Rulemaking, 16 FCC Rcd. 9923 (2001) ("*CLEC Access Charge Order*").

II. THE IUB HAS HELD A PUBLIC DECISION MEETING IN WHICH IT ISSUED SEVERAL FINDINGS THAT REGARD OR DIRECTLY IMPACT INTERSTATE TELECOMMUNICATIONS

The IUB held a decision meeting on August 14, 2009 to announce its preliminary ruling in Docket FCU 07-2 and to outline the content of the *IUB Order*. Ignoring the Commission's holding and analysis in *Farmers and Merchants*, the Board held that the LECs' conference service provider customers were not "end users" under both the LECs' interstate and intrastate tariffs. The Board found, in clear conflict with *Farmers and Merchants*, that calls to conference-calling and chatline bridges did not terminate at the bridge. The Board based this decision on the clearly erroneous belief that the pending Petition for Reconsideration of the *Farmers and Merchants* decision made it not final, and hence not binding on the Board. The Board went so far as to say that it possessed a more comprehensive record than the Commission possessed in *Farmers and Merchants*. The Board also found, in clear conflict with *Jefferson, Beehive,* and *Frontier*, which the Board found to be inapplicable, that the sharing of revenue between rural carriers with high access charge rates and chatline or conference-calling providers was unreasonable. The Board even weighed in on the LECs qualifications for the rural exemption under the *CLEC Access Charge Order*. The Board is going to require refunds of access charges to IXCs, yet failed to identify whether intrastate or interstate revenues were to be refunded. The Board is also going to require the LECs to report to the Board how each is using its NXX codes, and return any unused blocks of numbers to NANPA. Clearly, all of these actions greatly exceed the authority of the Board, and step well into the jurisdiction of the Commission.

III. STANDARD FOR GRANTING PETITIONS FOR DECLARATORY RULING

Section 1.2 of the Commission's rules provides that the "Commission may, in accordance with section 5(d) of the Administrative Procedure Act, on motion or on its own motion issue a

declaratory ruling terminating a controversy or removing uncertainty." 47 C.F.R. § 1.2. Thus, a declaratory ruling is an appropriate vehicle to restate established law or clarify any perceived uncertainty under existing Commission regulations or precedent.[5] Where, as here, the subject matter of the petition for declaratory ruling concerns issues over which the Commission has exclusive jurisdiction — *i.e.*, access charges for interstate telecommunications traffic— "the need for agency expertise and for uniformity of decisions" demand that this Commission provide guidance to the courts and state commissions. *Alltel Tennessee, Inc. v. Tennessee Pub. Serv. Comm'n*, 913 F.2d 305, 310 (6th Cir. 1990). This is particularly the case where the "actions of the state [commission] are necessarily intertwined with federal actions" and the "ultimate issue in this case" is whether the state commission has exceeded its jurisdictional authority. *Id.* at 309-310.

Petitioners file this request in advance of the *IUB Order* on the ground that they would be irreparably harmed, as described below, were any order issued that seeks to nullify or affect their interstate access service. As such, this Petition is not premature or unripe. Federal agencies are not constrained by Article III "case or controversy" limitations, but rather they "may issue a declaratory order in mere anticipation of a controversy or simply to resolve an uncertainty." *Pfizer, Inc. v. Shalala*, 182 F.3d 975, 980 (D.C. Cir. 1999).

IV. ALL ISSUES RELATED TO INTERSTATE ACCESS CHARGES FALL WITHIN THE COMMISSION'S EXCLUSIVE FEDERAL JURISDICTION

Congress granted the Commission exclusive jurisdiction over interstate telecommunications in the Communications Act of 1934, 47 U.S.C. §§ 151 *et seq.* (West 2001). Congress created the Commission

> [F]or the purpose of regulating interstate and foreign commerce in communication by wire ... and for the purpose of securing a more

[5] *See Universal Service Contribution Methodology*, 23 FCC Rcd. 1411, ¶ 1 (2008).

> effective execution of this policy by centralizing authority heretofore granted by law to several agencies and by granting additional authority with respect to interstate and foreign commerce in wire and radio communication, ...

Id. § 151. Congress then assigned the matters entrusted to the Commission's jurisdiction:

> ... [A]ll interstate and foreign communication by wire or radio and all interstate and foreign transmission of energy by radio, which originates and/or is received within the United States, and to all persons engaged within the United States in such communication or such transmission of energy by radio, and to the licensing and regulating of all radio stations as hereinafter provided; ...

Id. § 152(a).

The Supreme Court made clear in *Smith v. Illinois Bell Telephone Co.*, 282 U.S. 133, 148 (1930), that matters of interstate communications are entrusted to federal agencies, stating, "The separation of the intrastate and interstate property. . . is essential to the appropriate recognition of the competent governmental authority in each field of regulation." The Commission recently reiterated this well-settled principle:

> When a service's end points are in different states or between a state and a point outside the United States, the service is deemed a purely interstate service subject to the Commission's exclusive jurisdiction.[6]

In the case before the IUB, Qwest and other interexchange carriers ("IXCs") are attacking, directly and indirectly, the rates, terms, revenue derived from and conditions applied to terminating access for such "purely interstate" calls. Were the IUB to adopt this type of relief, it would undeniably encroach upon the FCC's exclusive federal jurisdiction.

---

[6] *In the Matter of Vonage Holdings Corporation, Petition for Declaratory Ruling Concerning an Order of the Minnesota Public Utilities Commission*, 19 FCC Rcd. 22404, 22413 ¶ 17 (2004) ("*Vonage Order*").

V. THE COMMISSION HAS ALREADY RESOLVED THE ISSUE OF LEC ACCESS CHARGES UNDER IDENTICAL CIRCUMSTANCES: *JEFFERSON*, *BEEHIVE*, *FRONTIER*, AND *FARMERS AND MERCHANTS*

Since the access charge regime was established in 1984, there has been continuous litigation between LECs and IXCs over the rates and volumes of exchange access traffic. The anticipated *IUB Order* at issue in this Petition is part of the most recent bout of access charge litigation.

The current access disputes began in the late 1990s with the advent of "chat-line" services. In December 1996, AT&T filed a Section 208 complaint against Jefferson Telephone Company, a rural ILEC based in Iowa. The Commission denied the AT&T complaint in an Order issued in 2001.[7] AT&T's complaint was identical to the complaint raised by Qwest in the IUB proceeding: Jefferson Telephone entered into a commercial agreement with International Audiotext Network ("IAN"), a provider of chat-line services. IAN "[marketed] and otherwise [aided] the chatline operations" and Jefferson made payments to IAN "based on the amount of access revenues that Jefferson received for terminating calls to IAN."[8]

AT&T's complaint charged that Jefferson violated § 201(b) of the Communications Act because it "acquired a direct interest in promoting the delivery of calls to specific telephone numbers." AT&T also argued that the "access revenue-sharing arrangement with IAN" was unreasonably discriminatory, in violation of § 202(a) of the Act, because Jefferson did not share revenues with all its customers.[9] The Commission rejected both these arguments and denied AT&T's complaint.

The following year, the Commission issued two more orders, denying similar complaints by AT&T directed at LECs that shared access revenues with chat-line operators. In *AT&T v.*

---

7 *AT&T Corp. v. Jefferson Tel. Co.*, 16 FCC Rcd. 16130 (2001) ("*Jefferson*").
8 *Id.* at 16131-2, ¶¶ 2-5.
9 *Id.* at 16133, ¶ 5.

Frontier Communications, the Commission rejected AT&T's allegations that "revenue-sharing arrangements" constituted unreasonable discrimination in violation of § 202(a) or violations of the ILECs' common carrier duties under § 201(b).[10] In *AT&T v. Beehive Telephone*,[11] the Commission again denied AT&T's complaint against a LEC that engaged in a commercial relationship with a chat-line provider. The *Jefferson*, *Frontier*, and *Beehive* decisions all dealt with exactly the same commercial arrangement that the IXCs characterize as "traffic pumping," despite the fact that it is the IXCs' customers who initiate the traffic. None of these decisions were appealed.

In 2006, the large IXCs developed a new strategy: rather than risk further adverse decisions by filing complaints with the Commission, Qwest, AT&T, Verizon, Sprint and other large IXCs began a coordinated campaign of self-help by simply refusing to pay the access charges billed by rural LECs. This forced the LECs to initiate collection actions in federal district court, and to incur the costs and delay associated with federal court litigation. In some cases, the IXCs filed complaints against the LECs in federal court, in an exercise of forum shopping in anticipation of collection actions. Of course, these complaints also had the effect of imposing legal costs on the LECs. In so doing, the IXCs imposed a "cost/price squeeze" on these rural carriers in two ways: they withheld payment of lawful access charges in an unlawful campaign of self-help, while imposing costs on the LECs by forcing them to defend harassing and meritless litigation. As a result of this coordinated campaign by the large IXCs — which has now been proceeding for over three years — they have succeeded in preventing some LECs from building out their networks to serve their rural communities, have caused other LECs to lay off

---

[10] *AT&T Corp. v. Frontier Commc'ns of Mt. Pulaski, Inc.*, 17 FCC Rcd. 4041, 4142, ¶¶ 1, 2 (2002) ("*Frontier*").

[11] *AT&T v. Beehive Tel. Co.*, 17 FCC Rcd. 11641 (2002) ("*Beehive*").

employees, and in some cases, have driven LECs or chat and conference operators out of business.

In the most recent Commission case regarding terminating access, Qwest filed with this Commission a formal complaint on May 2, 2007, against Farmers and Merchants Mutual Telephone Company ("Farmers"), an Iowa LEC that Qwest accused of "traffic pumping." Qwest asserted that it had no obligation to pay the LEC's invoiced access charges. In late 2007, the Commission rejected Qwest's arguments. Though the Commission did agree with Qwest that, as a rate-of-return carrier, Farmers may have over-earned, it rejected all of Qwest's other arguments, and found that:

- Farmers did not violate Sections 203 or 201(b) of the Act by imposing terminating access charges on traffic bound for conference calling companies.[12]
- The Farmers' tariff allows Farmers to assess terminating access charges on calls to conference calling companies.[13]
- Conference calling companies are end users as defined in Farmers' tariff, and access charges have been properly imposed under that tariff.[14]
- Farmers' payment of marketing fees to the conference calling companies does not alter their status as end users under Farmers' tariff. In addition, whether the conference calling companies paid Farmers more than Farmers paid them is irrelevant.[15]
- Qwest failed to prove that the conference calling company-bound calls do not terminate in Farmers' exchange. Qwest also failed to prove that Farmers' imposition of terminating access charges was inconsistent with its tariff.[16]
- Farmers' tariffed rates were "deemed lawful" and so the LEC was not responsible for making refunds.[17]

Qwest filed a Petition for Reconsideration of the *Farmers and Merchants* decision more than 16 months ago, which the Commission is still apparently considering.

---

12 *Farmers and Merchants Order* at 17985, ¶ 30.
13 *Id.* at 17987, ¶ 35.
14 *Id.*
15 *Id.* at 17987, ¶ 38.
16 *Id.* at 17987, ¶ 39.
17 *Farmers and Merchants Order* at 19983-84, ¶ 27.

There are now at least 17 federal court cases pending in district courts across the country reviewing the continuing refusal of IXCs to pay for the access services provided by rural LECs for terminating the IXCs' customers' calls to conferencing service providers.[18] The Federal District Court for the Southern District of New York recently referred an issue from a pending access charge collection action to the Commission – AT&T's claim that commercial relationships between LECs and chat/conference operators constitute a "sham" arrangement that voids the LECs' tariffs.[19] Petitioners understand that a second referral of issues from a collection action/"traffic pumping" complaint proceeding was made by the Federal District Court of Minnesota on July 15, 2009.[20] Finally, three other actions involving the same issues are pending before the Federal District Court for the Southern District of Iowa.[21] These three cases involve three IXCs — Qwest, AT&T and Sprint — and several rural LECs. The parties in that case all acknowledged that the Commission's decision in the *Farmers and Merchants* case is directly relevant to their claims and/or defenses.

The Commission has incorporated all of the issues associated with the IXCs' "traffic pumping" complaints into a pending rulemaking proceeding in WC Docket No. 07-135. In two rounds of comments and numerous *ex parte* presentations, Qwest, AT&T, Verizon, Sprint and other IXCs have reiterated every argument they have made against LEC commercial agreements

---

[18] *See Petition for Declaratory Ruling of All American Telephone Co., Inc., e.Pinnacle Communications, Inc., and ChaseCom to Reconfirm that Local Exchange Carrier Commercial Agreements with Providers of Conferencing, "Chat Line" and Other Services Do Not Violate the Communications Act*, filed with the Commission on May 20, 2009. In that Petition, and subsequent Answer, the three Petitioner LECs list 17 federal district court actions pending in Iowa, South Dakota, New York and Minnesota, all dealing with "traffic pumping" allegations, and demands for payment of access charges. The Commission has not yet put that Petition out for public comment, and has not assigned a docket number to the proceeding.

[19] *Id.*; *see also* File No. EB-09-MDIC-0003, Informal Complaint of AT&T (April 20, 2009).

[20] *Tekstar Communications, Inc. v. Sprint Communications Co., L.P.*, Case No. 0:08-cv-01130 (D. Minn. April 23, 2008).

[21] *AT&T Corp. v Superior Telephone Cooperative, et al.*, Docket No. 4:07-cv-00043 (S.D. Iowa Jan. 29, 2007); *Qwest Communications Corp. v. Superior Telephone Cooperative, et al.*, Docket No. 4:07-cv-00078 (S.D. Iowa Feb. 20, 2007); *Sprint Communications Company, L.P. v. Superior Telephone Cooperative, et al.*, Docket No. 4:07-cv-00194 (S.D. Iowa May 7, 2007).

with chat/conference/international operators in past proceedings before this commission, before the federal district courts, and before the Iowa Utilities Board.

Unfortunately, the Commission's use of party-specific complaint proceedings to address access charge issues related to chat-line and conference traffic over the last decade has not dissuaded the IXCs from a continual resort to self-help tactics. Because the final orders in the *Jefferson*, *Frontier*, *Beehive* and *Farmers and Merchants* cases came from adjudicatory proceedings, the IXCs have argued that minor changes in the underlying facts of the cases, or the legal theories raised by the IXCs, render those decisions inapposite. Nothing demonstrates this more clearly than Qwest's Proposed Findings of Fact and Conclusions of Law ("Qwest FFCL") in the IUB proceeding.[22]

VI. QWEST'S PROPOSED RELIEF IN THE IUB PROCEEDING IS AN INVITATION TO USURP THE COMMISSION'S AUTHORITY OVER INTERSTATE TELECOMMUNICATIONS

Qwest seeks relief from the IUB that would be comical in its jurisdictional overreach but for the fact that the Board appears receptive to Qwest's invitation to usurp this Commission's exclusive authority to regulate interstate telecommunications. As Qwest noted, "[a]t numerous times throughout [the IUB proceeding], the LEC Respondents have argued that the Board is without jurisdiction to hear or decide the issues involved. Each time, the Board has rejected the arguments, and stated that 'the Board has jurisdiction to hear all of these issues.' July 3, 2007 Order at 5."[23]

---

[22] Petitioners are constrained from appending Qwest's FFCL or post-hearing briefs, because Qwest has asserted confidentiality over some portions of these documents. Though Petitioners are confident that the portions of these papers quoted or paraphrased herein are not confidential, caution dictates that the papers themselves not be appended.

[23] Qwest FFCL at 3.

A. THE QWEST PROPOSED FINDINGS OF FACT AND CONCLUSIONS OF LAW ILLUSTRATE THE JURISDICTIONAL OVERREACH OF THE IUB

These "issues" that the Board believes are within its jurisdiction include the following, as taken from the Qwest FFCL:

- Whether FCSCs [Qwest's acronym for conference service providers] are wholesalers or carriers, not end-users, and therefore calls delivered to FCSCs are not subject to interstate and intrastate switched access charges. Qwest FFCL No. 9.

- Whether end users must either own, lease, or control a building or buildings (or defined portions of a "building or buildings," which necessarily requires a lease or ownership) to become an end-user premises under the access tariffs. Qwest FFCL No. 11.

- Whether the LEC Respondents terminated any of the international calling, credit-card calling or pre-recorded playback calling at issue in this case. Qwest FFCL No. 13.

- Whether Great Lakes is entitled to intrastate or interstate switched access charges for *any* of its calls. Qwest FFCL No. 18.

- Whether LECs are entitled to *any* compensation for the calls delivered to numbers associated with FCSCs on the grounds that such calls are beyond the scope of the interstate and intrastate switched access tariffs. Qwest FFCL No. 20.

- Whether the sharing of interstate and intrastate access revenue is an unjust and unreasonable practice. Qwest FFCL No. 21.

- Whether it is an unjust and unreasonable practice for CLECs involved in "traffic pumping" to claim the rural carrier exemption from the benchmark limit under the *CLEC Access Charge Order*. Qwest FFCL No. 22.

- Whether the arrangements between the LEC Respondents and the FCSCs to obtain and share interstate and intrastate access revenues from long distance carriers through the offering of free calling services constitute unjust and unreasonable practices and constitute violations of the public interest and the LEC Respondents' certifications. Qwest FFCL No. 23.

- Whether Great Lakes failed to satisfy the rural carrier exemption from the benchmark limit under the *CLEC Access Charge Order*. Qwest FFCL No. 24.

- Whether "traffic pumping" is an unjust and unreasonable practice because it abuses numbering resources. Qwest FFCL No. 28.

- Whether LECs must immediately cease and desist sharing interstate and intrastate access revenues with FCSCs and immediately disconnect the telephone numbers associated with such services. Qwest FFCL No. 30.

- Whether LECs must immediately cease billing IXCs such as Qwest for interstate and intrastate switched access fees on FCSC traffic. Qwest FFCL No. 31.[24]
- Whether the Board's decision should be considered to be binding precedent that the Board intends to follow in any future "traffic pumping" cases. Qwest FFCL No. 36.

Each of Qwest's proposed findings of fact and conclusions of law listed above is plainly beyond the IUB's jurisdiction. But after the Commission ruled against Qwest in the *Farmers and Merchants* case, there can be no doubt that Qwest is seeking another bite at the apple.[25] Qwest argued to the Board that:

> The LEC Respondents also rely upon *AT&T Corporation v. Jefferson Telephone Company*, 16 FCC Rcd. 16130 (2001), and claim this decision and its progeny show the FCC has already found traffic pumping schemes are legal. The cases do not stand for the propositions cited by the LEC Respondents. . . The LEC Respondents arguments [sic] attempt to read more into the [Jefferson] decision than exists. No matter how many times the LECs say "*Jefferson*" and "*Farmers and Merchants*" it does not change the unalterable fact that these decisions do not help them in the slightest.[26]

To the contrary, *Jefferson* and *Farmers and Merchants* are dispositive in favor of Petitioners.

Sprint even went a step further at the hearing and stated that the IUB effectively has the authority to reverse the Commission's holding in *Farmers and Merchants*: "[T]herefore we don't know what [the Commission is] going to say, so [the *Farmers and Merchants*] order couldn't possibly be the final answer, which is what we're asking this Board to do for us."[27]

Thus, despite a decade of consistent rulings on exactly the same fact patterns — rural LECs' collection of access charges for calls made to chat and conference service operators —

---

[24] Qwest did not seek to hide that it is asking the Board to regulate the rates of the LEC Respondents. When asked whether the rate levels themselves were being challenged, Qwest's expert witness, Jeffrey Owens, stated that Qwest was asking the Board to make a determination that the LECs did not qualify for the rural exemption and accordingly be required to mirror the ILECs' rates, "so in that sense Qwest is addressing the rates in this proceeding." IUB Hearing Transcript at 568:5-16. All excerpts from this transcript are public, non-confidential documents and are appended as **Exhibit A** to this Petition.

[25] Qwest's expert witness, Jeffrey Owens, opined that "the whole question in this proceeding is does that tariff, that *interstate* tariff, apply to the traffic that Qwest has delivered to the LECs[.]" IUB Hearing Transcript at 612:25-613:2 (emphasis added).

[26] Qwest FFCL at 30.

[27] Testimony of James Appleby (Sprint), IUB Hearing Transcript at 1809:14-17.

that have consistently ruled in favor of LECs, the IXCs are contending that the FCC decisions do not matter because they come out of party-specific adjudicatory proceedings. The IUB appears poised to adopt these arguments and attempt to fill this perceived void by creating its own law on the matter, in complete disregard of Commission precedent. Unless preempted, this would have the effect of overturning the Commission's rulings in *Jefferson, Frontier, Beehive* and *Farmers and Merchants* as they apply to interstate traffic exchanged in Iowa, and would pre-judge issues now under active consideration by the Commission in at least one currently docketed rulemaking proceeding.

B. QWEST SEEKS A RULING FROM THE IUB THAT WOULD EXCEED THE IUB'S JURISDICTION IN OTHER WAYS

1. International and VoIP Calls Are Within the Exclusive Jurisdiction of the Federal Communications Commission

Qwest expressly seeks a determination from the IUB that terminating switched access charges cannot apply to conference calls made using Internet-protocol based calling cards, or to calls that are routed to overseas numbers. Qwest FFCL No. 13. The impropriety of such a ruling is clear on its face. Under the Communications Act of 1934, the Commission is vested with exclusive jurisdiction over interstate and international traffic. 47 U.S.C. § 152. Moreover, the Commission has on multiple occasions asserted exclusive jurisdiction over Internet-based communications,[28] including IP-based calling card calls.[29]

2. The IUB Has No Authority to Regulate the Use of Numbering Resources

Qwest also invites the IUB to find that "traffic pumping" is unreasonable because it "abuses numbering resources." Qwest FFCL No. 28. The Commission has exclusive jurisdiction over numbering resources, and this issue falls within its exclusive authority. 47

---

[28] *Vonage Order*, 19 FCC Rcd. 22404 (2004).

[29] *AT&T Corp. Petition for Declaratory Ruling Regarding Enhanced Prepaid Calling Card Services*, 20 FCC Rcd. 4826 (2005).

U.S.C. § 251(e)(1) ("The Commission shall have exclusive jurisdiction over those portions of the North American Numbering Plan that pertain to the United States.") The appropriate way for a state regulatory authority to address numbering-resource concerns is to petition the Commission for delegated authority, which the IUB has not done.[30]

Given the pendency of at least 17 different federal court actions in at least four different districts, and the multiple referrals to this Commission, it is apparent that the issues involving rural LEC commercial agreements with conference and chat-line operators are of nationwide importance. The Commission must provide the national guidance that the courts, state regulators and the industry require. In order to provide such guidance, the Commission should declare that the rates for, terms of, and revenue derived from interstate access service are within its exclusive jurisdiction, and that any contrary order from the IUB is preempted.

C. THE BOARD'S PREVIOUS ORDERS IN DOCKET FCU 07-2 DO NOT DISPLAY A CLEAR DELINEATION BETWEEN INTRASTATE AND INTERSTATE JURISDICTION

The Board's handling of several jurisdictional challenges in docket FCU 07-2 seems to indicate that it is willing to consider, and possibly resolve, matters that fall within the Commission's exclusive interstate jurisdiction. Several parties filed motions to dismiss based on the *de minimis* volume of intrastate traffic in dispute and Qwest's lack of standing to pursue discrimination claims.[31] In denying these motions, the Board stated it was "aware of its

---

[30] *Numbering Resource Optimization*, 15 FCC Rcd 7574, ¶ 7 (2000).

[31] The scope of the IUB's authority is narrowly circumscribed by its enabling statute, much more so than other state regulatory bodies. Specifically, it cannot regulate the rates for services provided by the Petitioners, or by the other LECs that were the subject of its complaint action in Docket No. FCU-07-2. Iowa Code § 476.1 states that "mutual telephone companies in which at least fifty percent of users are owners, co-operative telephone corporations or associations [and] telephone companies having less than fifteen thousand customers and less than fifteen thousand access lines . . . are not subject to the rate regulations provided for in this chapter." All of the Petitioners meet these statutory criteria.

Of course, the effect of the Qwest's proposed relief is to regulate the LECs' rates if the IUB orders the LECs to refund the access fees they have collected from Qwest and the other IXCs to date, and prohibits them from collecting their tariffed access charges in the future. In so doing the IUB will have set a rate of zero for the services that the LECs provide to the IXCs in terminating the traffic at issue. *See Advamtel. LLC v. AT&T Corp.*, 118 F. Supp. 2d 680, 687 (E.D. Va. 2000) (finding that, if the tariffed rate does not apply to the collection of access charges, the IXC "will have received millions of dollars of services for free – surely, a result antithetical to the filed-

jurisdictional limits with respect to interstate and international traffic,"[32] but still allowed Qwest to proceed on all its claims. Several parties then sought to limit the scope of discovery to only matters related to intrastate matters and sought protection against the discovery of issues related to the terms, conditions, rates or revenues associated with interstate communications. These motions were denied again by the Board.[33] Again, according to Qwest, "[a]t numerous times throughout [the IUB proceeding], the LEC Respondents have argued that the Board is without jurisdiction to hear or decide the issues involved. Each time, the Board has rejected the arguments, and stated that 'the Board has jurisdiction to hear all of these issues.' July 3, 2007 Order at 5."[34]

At the Hearing itself, the Board seemed to acknowledge its jurisdictional limitations, but nonetheless asked Qwest how it can issue an order regarding interstate access:

> Board Member Tanner: You recommend the Board prohibit LECs from participating in traffic laundering. Again, if the Board only has intrastate access jurisdiction, how would this resolve the larger problem which also seems to be on the **interstate access side**?
>
> Qwest Expert Jeffrey Owens: **This you could solve both on the interstate and intrastate side** because you have control over the telephone numbers that are assigned to the LECs. You also have control over the certification of the LECs in terms of what territories they can serve.

IUB Hearing Transcript at 827:6-17 (emphasis supplied).

---

rate doctrine."). But because Qwest is not willing to admit this fact, it establishes the fiction that it is merely regulating the "terms and conditions of service" to prevent "discrimination," a claim Qwest is wholly without standing to raise.

[32] Order Docketing Complaint, Setting Procedural Schedule, Denying Motion for Summary Judgment, Denying Motions to Dismiss, Denying Motion to Defer Discovery, and Denying Cross-Motion For Emergency Evidentiary Hearing at 12 (May 25, 2007). All Orders issued by the IUB and referenced herein are public and non-confidential documents and are appended as **Exhibit B** to this Petition.

[33] Order Denying Motion to Dismiss Moot Complaint, Granting Supplemental Motion to Compel, Denying Motion for Reconsideration, Granting Motion to Extend Hearing, and Setting Hearing, and Setting Amended Procedural Schedule (July 3, 2007).

[34] Qwest FFCL at 3.

When questioned a short time later by Qwest's counsel on redirect examination, Mr. Owens made clear that Qwest's strategy throughout the proceeding was to enable the Board to exercise authority over telecommunications regardless of its jurisdictional classification:

> Q. I would like to start on redirect with some questions from today's — specifically a question asked by Board Member Krista Tanner, and she said what ability, if any, does this Board have to prevent revenue sharing at both the intra and interstate levels, and you contemplated it was intrastate only. Do you recall that?
>
> A. Correct.
>
> Q. Does the Board have the ability to prevent discrimination of all types?
>
> A. I believe the rules of the Iowa Board give it that authority, yes.
>
> Q. Does the concept of revenue sharing, as we have in this case, contain facts where the local exchange carrier defendants are using **revenues from the interstate access regime** to provide kickbacks to their free calling partners?
>
> A. **In every instance, yes.**
>
> Q. And given the Board has jurisdiction over discrimination, have you rethought your answer to Board Member Tanner?
>
> A. Yes. **One additional tool the Board has** to consider the issues in this case is if it determines that the LECs are discriminating amongst customers in Iowa by giving — sharing switched access charges with some parties, but not others, because of the use of switched access charges with some parties, but not others, because of the use of switched access services to facilitate that discrimination, then it could order that such discrimination cease, which would prevent the LECs from using their interstate tariffs in that manner. So another way of putting it, they're using the **interstate tariff** to facilitate discrimination.

IUB Hearing Transcript at 837:8-838:18 (emphasis supplied).

Taken together these instances display a posture hostile towards the well-settled bounds of state commission jurisdiction. Though in each case the Board acknowledged "its jurisdictional limits with respect to interstate and international traffic," it nonetheless permitted this case to proceed on Qwest's attempts to enforce the tenets of federal telecommunications regulations and to invalidate federal access tariffs. Based on this history of the case, Petitioners

seek a reiteration of the restrictions on state agencies to resolve matters regarding terms, conditions, rates or revenues associated with interstate and international communications.

VII. ANY ACTION BY THE IUB RELATED TO INTERSTATE OR INTRASTATE ACCESS WOULD MERIT PREEMPTION UNDER THE *LOUISIANA PSC* TEST

The jurisprudence on the Commission's interstate jurisdiction being so clear, Petitioners respectfully request a ruling that any action by the IUB impinging on the rates, terms, or revenue derived from interstate or intrastate service is preempted. The bounds of federal jurisdiction to supplant state law were articulated by the Supreme Court in the *Louisiana PSC* case:

> The Supremacy Clause of Article VI of the Constitution provides Congress with the power to pre-empt state law. Pre-emption occurs when Congress, in enacting a federal statute, expresses a clear intent to pre-empt state law, *Jones v. Rath Packing Co.*, 430 U.S. 519, 97 S.Ct. 1305, 51 L.Ed.2d 604 (1977), when there is outright or actual conflict between federal and state law, *e.g.*, *Free v. Bland,* 369 U.S. 663, 82 S.Ct. 1089, 8 L.Ed.2d 180 (1962), where compliance with both federal and state law is in effect physically impossible, *Florida Lime & Avocado Growers, Inc. v. Paul*, 373 U.S. 132, 83 S.Ct. 1210, 10 L.Ed.2d 248 (1963), where there is implicit in federal law a barrier to state regulation, *Shaw v. Delta Air Lines, Inc.*, 463 U.S. 85, 103 S.Ct. 2890, 77 L.Ed.2d 490 (1983), where Congress has legislated comprehensively, thus occupying an entire field of regulation and leaving no room for the States to supplement federal law, *Rice v. Santa Fe Elevator Corp.*, 331 U.S. 218, 67 S.Ct. 1146, 91 L.Ed. 1447 (1947), or where the state law stands as an obstacle to the accomplishment and execution of the full objectives of Congress. *Hines v. Davidowitz,* 312 U.S. 52, 61 S.Ct. 399, 85 L.Ed. 581 (1941). Pre-emption may result not only from action taken by Congress itself; a federal agency acting within the scope of its congressionally delegated authority may pre-empt state regulation. *Fidelity Federal Savings & Loan Assn. v. De la Cuesta,* 458 U.S. 141, 102 S.Ct. 3014, 73 L.Ed.2d 664 (1982); *Capital Cities Cable, Inc. v. Crisp*, 467 U.S. 691, 104 S.Ct. 2694, 81 L.Ed.2d 580 (1984).[35]

The Commission itself has noted that: "It is well-established that '[p]re-emption may result not only from action taken by Congress itself; a federal agency acting within the scope of its congressionally delegated authority may preempt state regulations.'"[36]

---

[35] *Louisiana PSC*, 476 U.S. 355 at 368-69.

[36] *Federal-State Joint Board on Universal Service; Western Wireless Corporation Petition for Preemption of an Order of the South Dakota Public Utilities Commission*, 15 FCC Rcd. 15168, 15172, ¶ 8 (2000) (citing *Fidelity Federal Sav. and Loan Ass'n v. De La Cuesta*, 458 U.S. 141, 153-54 (1982)).

The Commission has used this authority consistently to prevent the erosion of its jurisdiction, to implement its rules and policies on a nationwide basis, and to implement the mandates of the Communications Act.[37] Section 253 of the Communications Act, as amended by the Telecommunications Act of 1996, provides the Commission with express authority to preempt state regulations that "prohibit or have the effect of prohibiting the ability of an entity to provide any interstate or intrastate telecommunications service." 47 U.S.C. § 253. In addition, the Commission has found implied preemption authority in other sections of the Act, including Sections 154(i) and 251.[38]

As Petitioners demonstrate below, any IUB order that grants Qwest any of the relief it seeks would merit preemption under all the provisions of the *Louisiana PSC* test. Such an order would: (1) constitute a barrier to the competitive provision of both interstate and intrastate services, in contravention of § 253 of the Act; (2) directly contradict statements of law and policy established by this Commission; (3) make it impossible to comply with federal law and the IUB's decision; (4) effectively attempt to preempt Commission authority, ignoring the fact that the Commission has occupied the field by establishing rulemaking proceedings that are actively considering identical issues; and (5) is a direct impediment to the rules and policies established by this Commission.

A. CONGRESS HAS EXPRESSED A CLEAR INTENT TO PREEMPT STATE ACTIONS THAT RESTRICT COMPETITION

Section 253 of the federal Communications Act provides for the "Removal of Barriers to Entry." This section of the Act states:

---

[37] *E.g.*, *Vonage Holdings Corp.*, 19 FCC Rcd. 22404 (2004); *Petition for a Declaratory Ruling filed by National Association for Information Services, Audio Communications, Inc. and Ryder Communications, Inc.*, 8 FCC Rcd. 698 (1993), *aff'd* 10 FCC Rcd. 4153 (1995).

[38] *See BellSouth Telecommunications, Inc. Request for Declaratory Ruling that State Commissions May Not Regulate Broadband Internet Access Services By Requiring BellSouth to Provide Wholesale or Retail Broadband Services to Competitive LEC UNE Voice Customers*, 20 FCC Rcd. 6830, 6839, ¶ 19 (2005).

> [253](a) IN GENERAL. – No State or local statute or regulation, or other State or local legal requirement, may prohibit or have the effect of prohibiting the ability of any entity to provide any interstate or intrastate telecommunications service.
>
> * * *
>
> (b) STATE REGULATORY AUTHORITY. – Nothing in this section shall affect the ability of a State to impose, on a competitive neutral basis . . . requirements necessary to . . . protect the public safety and welfare, ensure the continued quality of telecommunications services, and safeguard the rights of consumers.
>
> * * *
>
> (d) PREEMPTION. – If, after notice and an opportunity for public comment, the Commission determines that a State or local government has permitted or imposed any statute, regulation, or legal requirement that violates subsection (a) or (b), the Commission shall preempt the enforcement of such statute, regulation, or legal requirement to the extent necessary to correct such a violation or inconsistency.

As discussed below, the relief that Qwest seeks would restrict both intrastate and interstate competition in multiple respects, and so falls within the express Congressional preemption mandate.

Qwest asks the Board to revoke the certificate Great Lakes on the grounds that they have engaged in unreasonable conduct. Qwest FFCL No. 26. Specifically, Qwest seeks to de-certify Great Lakes on the ground, among others, that it enters into contractual arrangements with conference and chat-line operators and shares access revenues with them. Qwest can cite to no Commission precedent to support this finding, and there is none. In fact, as discussed above, the Commission on four separate occasions — in its *Jefferson*, *Frontier*, *Beehive*, and *Farmers and Merchants* decisions — has rejected identical Qwest and AT&T arguments against identical conduct. Therefore, with respect to interstate access traffic at a minimum, the IUB has neither the jurisdiction nor the grounds to seek revocation of the LECs' certifications.

Any attempt by the IUB to decertify the LECs on the grounds of providing service to conference-calling and chat-line service providers must fail because the statutory standards that apply under both the Iowa Code and the federal Communications Act are essentially identical

and the Commission has found such conduct to be lawful. The regulatory standard promulgated in Section 476.3 of the Iowa Code states: "When the board, after a hearing held after reasonable notice, finds a public utility's rates, charges, schedules, service, or regulations are unjust, unreasonable, discriminatory, or otherwise in violation of any provision of law, the board shall determine just, reasonable, and nondiscriminatory rates, charges, schedules, service, or regulations to be observed and enforced." This standard is essentially the same as the test under which the Commission evaluated the complaints in its four decisions dealing with conference calling and chat-line traffic. Section 201(b) of the Communications Act states that: "All charges, practices, classifications, and regulations for and in connection with such communication service, shall be just and reasonable, and any such charge, practice, classification, or regulation that is unjust or unreasonable is hereby declared to be unlawful[.]" Therefore, since the standards are the same, if the LECs' conduct is lawful under federal law, it is necessarily lawful under Iowa state law.

The IUB's potential de-certification would directly prevent these two CLECs from providing intrastate service, and would force them out of the local Iowa market. In so doing, this action "prohibit[s] . . . the ability of [the CLECs] to provide any . . . intrastate telecommunications service" and so contravenes Section 253(a) of the Act.

B. QWEST'S PROPOSED RELIEF PRESENTS AN OUTRIGHT AND ACTUAL CONFLICT WITH ESTABLISHED FEDERAL LAW

Qwest asks the Board to expressly find that four seminal Commission decisions regarding issues that are identical to those under consideration in Iowa Docket FCU-07-2 are "inapposite" and to be ignored.[39] The IUB, however, is required to follow all of the Commission's decisions,

[39] Qwest FFCL at 30. In addition, Qwest's post-hearing brief flatly instructs the Board to "ignore" the *Farmers and Merchants Order*.

including the *Farmers and Merchants* decision. Thus, were it to grant Qwest's requested relief, the Board will contravene prevailing federal law.

1. Qwest's requested relief would require the Board to flout the Commission's orders governing interstate terminating access.

The Board cannot render a decision that ignores or violates the Commission's clear holding in *Farmers and Merchants* that traffic to any entity satisfying the NECA definition of "end user" and "customer" is compensable for terminating access. That *Farmers and Merchants* is the subject of a Petition for Reconsideration makes no difference. Section 1.106(n) of the Commission's Rules makes clear that reconsideration requests do not stay the effect of a Commission order:

> Without special order of the Commission, the filing of a petition for reconsideration shall not excuse any person from complying with or obeying any decision, order, or requirement of the Commission, or operate in any manner to stay or postpone the enforcement thereof.

Of course, neither the IUB nor Qwest has received such a special order from this Commission, and the *Farmers and Merchants* decision is binding law on the facts of this case.

Qwest asks the Board to find that the Commission's decisions in *Jefferson, Frontier*, and *Beehive,* as well as *Farmers and Merchants*, are all inapposite because they were the result of party-specific adjudications and were narrowly decided on the facts of the individual cases. This invitation is wholly improper on two counts: First, the Commission routinely uses the formal complaint process to establish precedent that controls the conduct of other carriers in similar circumstances. The *Jefferson, Frontier, Beehive* and *Farmers and Merchants* cases addressed exactly the same traffic that is the subject of the IUB FCU-07-2 docket — calls terminating to conference and/or chat-line operators. Those cases challenged exactly the same conduct — commercial agreements in which LECs shared interstate and intrastate access revenues. And the IXCs in those cases sought exactly the same relief — refunds of access charges paid, and

absolution from the obligation to pay the tariffed rates in the future. In fact, the *Frontier* decision is only a single paragraph followed by two ordering paragraphs. The Commission needed only two sentences to dismiss AT&T's complaint:

> The issues raised in this Complaint are identical to those raised and denied in *AT&T Corp. v. Jefferson Telephone Co.* Thus, for reasons explained therein, we conclude that AT&T has failed to meet its burden of demonstrating that Defendants violated either section 202(a) or section 201(b) of the Act, and therefore deny AT&T's complaint in its entirety.[40]

These cases establish a body of law that constitutes *stare decisis*, and binds the IUB to apply that law to the facts in this case as a matter of federal law.

2. Qwest seeks to prohibit revenue sharing by carriers which stifles both intrastate and interstate competition.

Qwest is requesting a ruling from the IUB that prohibits all sharing of access revenue, including interstate revenue, between LECs and conference calling companies. Qwest FFCL Nos. 23, 30. Qwest does not attempt to differentiate between revenue sharing arrangements for intrastate and interstate services, and of course such jurisdictional parsing is impossible.

Any such prohibition of revenue sharing directly contradicts established Commission policy. In fact, the Commission has found that revenue sharing benefits the public by allowing the introduction of new, innovative services, and provides revenue options for startup companies that may otherwise not be able to enter the market to compete. This policy is most broadly stated in the Commission's treatment of business relationships between LECs that provide DSL and other wireline broadband services and independent Internet service providers ("ISPs"):

> The record demonstrates that allowing non-common carriage arrangements for wireline broadband transmission will best enable facilities-based wireline broadband Internet access service providers, particularly incumbent LECs, to embrace a market-based approach to their business relationships with ISPs, providing the flexibility and freedom to enter into mutually beneficial commercial arrangements with particular ISPs.

---

[40] *Jefferson*, 16 FCC Rcd. at 16131, ¶ 1 (citations omitted).

* * *

> Non-common carriage contracts will permit ISPs to enter into various types of compensation arrangements for their wireline broadband Internet access transmission needs that may better accommodate their individual market circumstances. For example, ISPs and facilities-based carriers could experiment with revenue-sharing arrangements or other types of compensation-based arrangements keyed to the ISPs' marketplace performance, enabling the ISPs to avoid a fixed monthly recurring charge (as is typical with tariffed offerings) for their transmission needs during start-up periods. . . . Moreover, it encourages other types of commercial arrangements with ISPs, reflecting business models based on risk sharing such as joint ventures or partnership-type arrangements, where each party brings their added value, benefiting both the consumer (through the ability to obtain a new innovative service) and each party to the commercial arrangement.[41]

Because a ban on revenue sharing would discourage innovation and restrict competition for both intrastate and interstate services, the ban would run afoul of Commission precedent.

Moreover, the question of sharing the revenues derived from services identical to those in the case before the IUB was more recently discussed in the *Farmers and Merchants* case, and the Commission again refused to find that such conduct is in any way improper. Nor did the FCC accept Qwest's argument that revenue-sharing arrangements disqualify an entity from being an end user under applicable tariffs. The FCC knew in that case that the LEC shared revenue with its conference service provider customers, and unequivocally stated that "Farmers' payment of marketing fees to the conference calling companies does not affect their status as end users, for purposes of Farmers' tariff." *Farmers and Merchants*, 22 FCC Rcd. at 17987-88, ¶ 38. Were the IUB now to hold that any Petitioner should be deprived of terminating access because it shared revenue with a conference call or chat line provider, it would directly contravene settled federal precedent.

Secondly, the IUB is poised to reach specific conclusions that are diametrically opposed to the Commission's findings on identical facts. The chart below summarizes these direct

---

[41] *Appropriate Framework for Broadband Access to the Internet Over Wireline Facilities*, 20 FCC Rcd. 14853, 14899-900, ¶¶ 87-88 (2005) (footnotes omitted) ("*Broadband Internet Access Order*").

conflicts with Commission precedent. In cases where the *Jefferson, Frontier, Beehive* and *Farmers and Merchants* all stand for the proposition, we refer to the "four cases."

REQUEST TO IUB	OPPOSING FEDERAL PRECEDENT
FCSCs are not End Users of the LECs. Qwest FFCL No. 9.	Directly contravenes the *Farmers and Merchants* decision, interpreting identical tariff language. 22 FCC Rcd. at 17987, ¶ 38.[42]
FCSCs do not purchase local exchange service from LECs. Qwest FFCL No. 2.	Directly contravenes the *Farmers and Merchants* decision, interpreting identical tariff language. 22 FCC Rcd. at 17987, ¶ 38.
FCSCs are business partners of LECs. Qwest FFCL No. 8.	Directly contravenes the *Farmers and Merchants* decision, interpreting identical tariff language. 22 FCC Rcd. at 17987, ¶ 38.
LECs never netted access payments for local exchange service with FCSCs. Qwest FFCL No. 5.	*Farmers and Merchants* finds that payment of money is not relevant. 22 FCC Rcd. at 17987, ¶ 38.
No FCSC calls were terminated to an End User's premises. Qwest FFCL No. 10.	Directly contravenes the *Farmers and Merchants* decision, interpreting identical tariff language. 22 FCC Rcd. at 17986,

[42] Paragraph 38 of *Farmers and Merchants* states:

> 38. We find that Farmers' payment of marketing fees to the conference calling companies does not affect their status as customers, and thus end users, for purposes of Farmers' tariff. Qwest offers scant support for its assertion that one cannot subscribe to a service without making a net payment to the service provider. For this pivotal proposition, Qwest cites nothing in the tariff itself, but only Black's Law Dictionary's definition of "subscription" as a "written contract by which one engages to ... contribute a sum of money for a designated purpose ... in consideration of an equivalent to be rendered, as a subscription to a periodical, a forthcoming book, a series of entertainments, or the like." Another dictionary, however, defines "subscribe" as merely "to enter one's name for a publication or service," and we note that offers of "free subscriptions" are quite common. We reject Qwest's premise that the conference calling companies can be end users under the tariff only if they made net payments to Farmers. The question of whether the conference calling companies paid Farmers more than Farmers paid them is thus irrelevant to their status as end users. The record shows that the conference calling companies did subscribe, *i.e.*, enter their names for, Farmers' tariffed services. Thus, the conference calling companies are both customers and end users, and Farmers' tariff therefore allows Farmers to charge terminating access charges for calls terminated to the conference calling companies.

Farmers and Merchants, 22 FCC Rcd at 17987, ¶ 38 (2007) (citations omitted).

REQUEST TO IUB	OPPOSING FEDERAL PRECEDENT
	¶¶ 33-34.
The services that LECs provided to FCSCs was not tariffed access service, it was private carriage. Qwest FFCL Nos. 9, 12.	The Commission found that the identical services were tariffed access services in all of the four cases.
"Traffic Pumping" is *per se* unjust and unreasonable. Qwest FFCL Nos. 28-29.	Because "Traffic Pumping," as defined by the IXCs is identical to the conduct reviewed, and found not to be unlawful, by the Commission in the four cases, the IUB is prohibited from establishing a *per se* rule against it.
Revenue sharing is an unjust and unreasonable practice. Qwest FFCL No. 21.	The Commission expressly rejected identical claims in all four cases and in *Broadband Internet Access Order*, 20 FCC Rcd. at 14899-900.

C. IT WOULD BE IMPOSSIBLE TO COMPLY WITH ESTABLISHED FCC PRECEDENT AND THE ORDER THAT QWEST IS SEEKING

Qwest's pleadings to the IUB in Docket FCU 07-2 do not even attempt to distinguish between intrastate traffic and interstate traffic,[43] and, as noted above, the Board has validated this approach throughout the proceeding. Qwest asks for a ruling that reaches broadly to any LEC that terminates calls to conference, chat or international operators, regardless of the jurisdictional classification of those calls. This is not surprising because it is physically impossible to differentiate between the handling of intrastate and interstate calls to bridges located in Iowa.

Qwest seeks relief that would target a LEC's actions and behavior that cannot be parsed by jurisdiction. Any findings by the IUB regarding sharing of revenues between LECs and FCSCs, the ownership and placement of the service bridges, the payment of tariffed services by FCSCs are actions that are impossible to break down into "intrastate" and "interstate"

[43] Qwest's witness proffered to address the amount of access charges at issue in the IUB proceeding, Anne Hilton, was asked "[a]s far as you know, has there been a separate figure computed solely for the intrastate costs incurred by Qwest in this case? A. Not to my knowledge." IUB Hearing Transcript at 1427:17-20.

components. By definition, the IUB's attempt to regulate actions and behavior encroaches on conduct within this Commission's purview, making "compliance with both federal and state law ... in effect physically impossible."[44]

Any decision by the IUB will be premised on its interpretation of the terms of Petitioners' federal tariffs, including "end users," "premises," and "buildings." These are precisely the same terms, used identically, in the federal tariffs that this Commission has interpreted in its *Farmers and Merchants*, *Jefferson*, *Frontier*, and *Beehive* decisions. Neither Qwest nor the IUB can explain how identical language can be interpreted differently in federal and state tariffs, and of course, it cannot be. Because the state tariff language at issue is identical to the federal tariff language, and complying with both federal and state law using opposing interpretations of the same language is "in effect physically impossible" under the *Louisiana PSC* test. For these reasons, a contrary decision issued out of the IUB cannot co-exist with established FCC rulings, and is inimical to the rules and policies set by the FCC. As such, the standards for preemption are met, and the *IUB Order* must be preempted.

D. THE FEDERAL COMMUNICATIONS COMMISSION HAS OCCUPIED THE FIELD OF LEC ACCESS CHARGES, REGARDING BOTH CURRENT LAW AND POTENTIAL PROSPECTIVE CHANGES TO THAT LAW

On October 2, 2007, this Commission issued a Notice of Proposed Rulemaking ("NPRM") in Docket 07-135, specifically to address IXC complaints associated with their "traffic pumping" allegations.[45] The NPRM established a broad inquiry into the allegations of unlawful access stimulation, and proposed the following items for comment:

- Whether new rules must be established to address instances of access stimulation. NPRM ¶ 11.
- Whether revenue sharing by LECs subject to rate-of-return regulation is unreasonable. *Id.* ¶ 19.

---

[44] *Louisiana PSC*, 476 U.S. at 368.

[45] *In the Matter of Establishing Just and Reasonable Rates for Local Exchange Carriers*, 22 FCC Rcd. 17989 (2007) ("07-135 NPRM").

- Whether new tariff language is needed to address the impact of increasing revenues on switching rates. *Id.* ¶ 21.
- Whether new regulations are required in the application of the existing tariff rules. *Id.* ¶¶ 21, 25.

Moreover, in the extensive comments filed by many parties, including Qwest, AT&T, and the other large IXCs, these carriers dramatically expanded the scope of the NPRM's inquiry, proposing specific new rules and policies to address the purported problems of "traffic pumping" by CLECs.[46] Thus, the Commission's pending rulemaking proceeding in Docket No. 07-135 is actively considering literally all of the issues upon which the IUB will rule. Because the imminent *IUB Order* impinges on rulemaking and policy issues actively under consideration by the FCC, and in which the Commission has occupied the field, the *IUB Order* will merit preemption.

E. THE ORDER THAT QWEST SEEKS FROM THE IUB WOULD STAND AS AN OBSTACLE TO THE ACCOMPLISHMENT AND EXECUTION OF FEDERAL LAW

As discussed above, Qwest is seeking relief from the IUB that is in excess of the Board's jurisdiction for no other purpose than to collaterally attack this Commission's decision in the *Farmers and Merchants* proceeding in particular, and the access charge regime in general. In establishing this system, the Commission expressly noted its concerns over the exact conduct Qwest is asking the IUB to validate: the IXCs' repeated use of "self-help" by simply refusing to pay tariffed access charges:

> Reacting to what they perceive as excessive rate levels, the major IXCs have begun to try to force CLECs to reduce their rates. The IXCs' primary means of exerting pressure on CLEC access rates has been to refuse payment for the CLEC access services. Thus, Sprint has unilaterally recalculated and paid CLEC invoices for tariffed access charges based on what it believes constitutes a just and reasonable rate. AT&T, on the other hand, has frequently declined altogether to pay CLEC access invoices that it views as unreasonable. We see these

[46] *E.g.*, Docket No. 07-135, Comments of Qwest Communications International Inc. at 16 (FCSC is not a customer, is a "business partner"), at 24-27 ("Further steps are necessary to prevent CLECs from engaging in access stimulation.") (Dec. 17, 2007); Comments of AT&T Inc. at 19-32 (Commission should adopt rule changes "to prevent the significant harms caused by ILEC and CLEC access stimulation schemes") (Dec. 17, 2007).

> developments as problematic for a variety of reasons. We are concerned that the IXCs appear routinely to be flouting their obligations under the tariff system. Additionally, the IXCs' attempt to bring pressure to bear on CLECs has resulted in litigation both before the Commission and in the courts. And finally, the uncertainty of litigation has created substantial financial uncertainty for parties on both sides of the dispute.

Seventh Report and Order, 16 FCC Rcd. 9923, 9932, ¶ 23 (citations omitted).

This holding is consistent with decades of FCC precedent prohibiting self-help. The Commission's position on this matter has been stated repeatedly and unequivocally: "[T]he law is clear on the right of a carrier to collect its tariffed charges, even when those charges may be in dispute between the parties[.]" *Tel-Central of Jefferson City, Missouri, Inc. v. United Telephone of Missouri, Inc.*, 4 FCC Rcd. 8338, 8339, ¶ 9 (1989) (*Tel-Central*); *see also Communique Telecommunications, Inc. DBA Logicall*, 10 FCC Rcd. 10399, 10405, ¶ 36 (1995).

As the Commission also has held:

> The Commission previously has stated that a customer, even a competitor, is not entitled to the self-help measure of withholding payment for tariffed services duly performed but should first pay, under protest, the amount allegedly due and then seek redress if such amount was not proper under the carrier's applicable tariffed charges and regulations.

Business WATS, Inc., v. AT&T Co., 7 FCC Rcd. 7942, ¶ 2 (1989) (citing *MCI Telecommunications Corporation, et al.*, 62 FCC 2d 703, ¶ 6 (1976) (hereinafter "*MCI Telecommunications Corp.*")); *see also National Communications Ass'n v. AT&T Co.*, No. 93 CIV. 3707, 2001 WL 99856 (S.D.N.Y. Feb. 5, 2001) (citing both cases).

> The Bureau rejected Frontier's argument that a "dispute" as to a carrier's eligibility to receive compensation negates the IXC's obligation to pay compensation in the first instance. The Bureau stated that an IXC disputing the veracity of a LEC's certification must do so by initiating a proceeding at the Commission, *e.g.*, through a Section 208 complaint against the LEC. We agree with the Bureau[.]

Bell Atlantic-Delaware v. Frontier Communications Services, Inc., 15 FCC Rcd. 7475, 7479-80, ¶ 9 (2000).

Qwest's invitation to the IUB to bless its anticompetitive behavior, however, would entirely undermine this Commission's precedent discussed above and threaten the ubiquity of the nation's telecommunications network. The concerted effort of the large IXCs to intimidate small, rural telephone companies into submission has had adverse effects across the nation. Qwest's proposed relief at the IUB would simply stand as an obstacle to resolve this nationwide problem. It is therefore incumbent upon this Commission, and not the IUB, to comprehensively address and reaffirm federal law.

F. BECAUSE THE SERVICES AT ISSUE ARE OVERWHELMINGLY INTERSTATE, THE STATE INTEREST IN THIS MATTER IS *DE MINIMIS*

As shown above, the great bulk of Qwest's arguments before the Board regard matters of interstate regulation: the propriety of relying on the Commission's rural exemption from the benchmark limit under the *CLEC Access Charge Order*; the use of numbering resources; and the so-called "revenue sharing" of interstate terminating access revenue. In addition, however, the types of traffic and amounts in controversy in Docket FCU 07-2 themselves demonstrate that the case is largely interstate.

Petitioners demonstrated in the record to the IUB that the conference and chat-line traffic in dispute between LECs and IXCs is overwhelmingly interstate in nature. In their written testimony to the IUB they demonstrated that 98% of their traffic terminated in Iowa is jurisdictionally interstate. At least one ILEC party to the proceeding offered to voluntarily refund the intrastate revenues it collected because they were insignificant compared to the legal costs the carrier would incur if forced to participate in the IUB's proceeding.[47] That request was summarily dismissed by the IUB.[48]

---

[47] Motion to Dismiss Moot Complaint Against Reasnor Telephone Company, LLC (June 8, 2007).

[48] Order Denying Motion to Dismiss Moot Complaint, Granting Supplemental Motion to Compel, Denying Motion for Reconsideration, Granting Motion to Extend Hearing, and Setting Hearing, and Setting Amended Procedural Schedule (July 3, 2007).

The amount of intrastate access charges at issue in IUB Docket No. FCU-07-02 is *de minimis*. The amount of unpaid minutes invoiced by Petitioners — for which Qwest seeks to be excused from payment — are:

	Intrastate Access		Interstate Access	
Great Lakes	$64,248	3.6%	$1,719,911	96.4%
Superior	$16,033	0.9%	$1,724,770	99.1%

From these figures it is clear that there is no significant state interest that could compete with the federal interest in the issues before the Board.

CONCLUSION

For the reasons stated herein, the Commission should declare that all matters regarding interstate access services, including rates, tariffs, and revenues, are within the Commission's exclusive jurisdiction and may not be addressed by state agencies. In addition, the Commission should rule that any IUB order impinging on the Commission's interstate jurisdiction should be considered preempted.

August 14, 2009

Respectfully submitted,

By Ross A. Buntrock

Ross A. Buntrock
Jonathan E. Canis
Adam D. Bowser
Arent Fox LLP
1050 Connecticut Avenue, N.W.
Washington, DC 20036

Counsel to
Great Lakes Communications Corp.
Superior Telephone Cooperative

CERTIFICATE OF SERVICE

I, Adam Bowser, do hereby certify that the foregoing **PETITION FOR DECLARATORY RULING TO THE IOWA UTILITIES BOARD AND CONTIGENT PETITION FOR PREEMPTION** was hand delivered on this 14th day of August 2009 to the following:

Marlene H. Dortch, Secretary
Federal Communications Commission
Office of the Secretary
c/o Natek, Inc.
236 Massachusetts Avenue, N.E., Suite 110
Washington, D.C. 20002

Chairman
Julius Genachowski
Federal Communications Commission
445 12th Street, SW
Washington, DC 20554

Commissioner
Michael J. Copps
Federal Communications Commission
445 12th Street, SW
Washington, DC 20554

Commissioner
Robert M. McDowell
Federal Communications Commission
445 12th Street SW
Washington, DC 20554

Commissioner
Mignon Clyburn
Federal Communications Commission
445 12th Street, SW
Washington, DC 20554

Commissioner
Meredith Attwell Baker
Federal Communications Commission
445 12th Street, SW
Washington, DC 20554

Priya Aiyar
Legal Advisor for Wireline Competition and International Issues
Federal Communications Commission
445 12th Street SW
Washington, DC 20554

Jennifer Schneider
Broadband, Wireline and Universal Service Legal Advisor
Federal Communications Commission
445 12th Street SW
Washington, DC 20554

Nicholas G. Alexander
Legal Advisor, Wireline
Federal Communications Commission
445 12th Street, SW
Washington, DC 20554

Carol Simpson
Acting Legal Advisor, Wireline and Broadband
Federal Communications Commission
445 12th Street, SW
Washington, DC 20554

Christi Shewman
Acting Legal Advisor for Wireline, Universal Service, and Consumer Issues
Federal Communications Commission
445 12th Street, SW
Washington, DC 20554

Adam Bowser

Adam Bowser

RPP/334718.1

EXHIBIT A

PUBLIC VERSION

STATE OF IOWA
DEPARTMENT OF COMMERCE
UTILITIES DIVISION

IN RE:	
QWEST COMMUNICATIONS CORPORATION,	
Complainant,	
vs.	DOCKET NO. FCU-07-2
SUPERIOR TELEPHONE COOPERATIVE; THE FARMERS TELEPHONE COMPANY OF RICEVILLE, IOWA; THE FARMERS & MERCHANTS MUTUAL TELEPHONE COMPANY OF WAYLAND, IOWA; INTERSTATE 35 TELEPHONE COMPANY, d/b/a INTERSTATE COMMUNICATIONS COMPANY; DIXON TELEPHONE COMPANY; REASNOR TELEPHONE COMPANY, LLC; GREAT LAKES COMMUNICATION CORP.; and AVENTURE COMMUNICATION TECHNOLOGY, L.L.C.,	VOLUME I
Respondents;	(Pages 1 - 775)
REASNOR TELEPHONE COMPANY, LLC,	
Counterclaimant,	
vs.	
QWEST COMMUNICATIONS CORPORATION,	
Counterclaim Respondent	

COPY

Hearing Room, 350 Maple Street
Des Moines, Iowa
Thursday, February 5, 2009

Met, pursuant to notice, at 9:00 a.m.

BEFORE: THE IOWA UTILITIES BOARD

KRISTA K. TANNER, Board Member (Presiding)
DARRELL HANSON, Board Member

EDIE SPRIGGS DANIELS - CERTIFIED SHORTHAND REPORTER
EILEEN HICKS - CERTIFIED SHORTHAND REPORTER

application of the NECA rate band 8 rates by a number of the LECs in this proceeding pursuant to the rural exemption, which I believe a number of the LECs do not qualify for.

Q. But the rate levels themselves are not being challenged?

A. Well, they are in the sense that if-- The rural exemption allows a rural LEC to set its rates below a cap established by NECA rate band 8 if they qualify for the exemption. If they don't qualify for the exemption, then the rates are capped at an interstate level at the incumbent LEC's rates, which if it's Qwest's rate, that rate is .55 cents per minute of use, which is substantially lower than NECA rate band 8, so in that sense Qwest is addressing the rates in this proceeding.

MR. HOLZ: Your Honor, may I address a question for the purpose of clarification?

When the witness is discussing "LEC," you're referring to CLECs and not LECs, correct?

THE WITNESS: Actually I'm referring to ILECs. Excuse me. CLECs. You're right. I'm sorry.

BOARD MEMBER TANNER: Thank you, Mr. Holz.

THE WITNESS: Thank you.

1 C E R T I F I C A T E

2 I, the undersigned, a Certified Shorthand
3 Reporter of the State of Iowa, do hereby certify that
4 I acted as the official court reporter at the hearing
5 in the above-entitled matter at the time and place
6 indicated;

7 That I took in shorthand all of the
8 proceedings had at the said time and place and that
9 said shorthand notes were reduced to typewriting
10 under my direction and supervision, and that the
11 foregoing typewritten pages are a full and complete
12 transcript of the shorthand notes so taken.

13 Dated at Des Moines, Iowa, this 9th day of
14 February, 2009.

15
16
17 CERTIFIED SHORTHAND REPORTER
18
19
20
21
22
23
24
25

PUBLIC VERSION

STATE OF IOWA
DEPARTMENT OF COMMERCE
UTILITIES DIVISION

IN RE:	
QWEST COMMUNICATIONS CORPORATION,	
Complainant,	
vs.	DOCKET NO. FCU-07-2
SUPERIOR TELEPHONE COOPERATIVE; THE FARMERS TELEPHONE COMPANY OF RICEVILLE, IOWA; THE FARMERS & MERCHANTS MUTUAL TELEPHONE COMPANY OF WAYLAND, IOWA; INTERSTATE 35 TELEPHONE COMPANY, d/b/a INTERSTATE COMMUNICATIONS COMPANY; DIXON TELEPHONE COMPANY; REASNOR TELEPHONE COMPANY, LLC; GREAT LAKES COMMUNICATION CORP.; and AVENTURE COMMUNICATION TECHNOLOGY, L.L.C.,	VOLUME I
Respondents;	(Pages 1 - 775)
REASNOR TELEPHONE COMPANY, LLC,	
Counterclaimant,	
vs.	
QWEST COMMUNICATIONS CORPORATION,	
Counterclaim Respondent	

COPY

Hearing Room, 350 Maple Street
Des Moines, Iowa
Thursday, February 5, 2009

Met, pursuant to notice, at 9:00 a.m.

BEFORE: THE IOWA UTILITIES BOARD

KRISTA K. TANNER, Board Member (Presiding)
DARRELL HANSON, Board Member

EDIE SPRIGGS DANIELS - CERTIFIED SHORTHAND REPORTER
EILEEN HICKS - CERTIFIED SHORTHAND REPORTER

1 thus interstate access charges do not apply to
2 traffic that's delivered to those partners.
3 Q. And I draw your attention, sir, to page 67
4 of your direct testimony, at lines 17 to 19.
5 A. Yes.
6 Q. You state, "None of the LECs charged their
7 FCSC partners these fees, further establishing that
8 the FCSCs are not end-user customers."
9 A. Okay.
10 Q. Now, the EUCL is designed for a carrier to
11 recover the costs of provisioning a line to a person
12 to provide service.
13 A. To recover a portion of that cost, yes.
14 Q. It's a type of common-line charge?
15 A. Correct.
16 Q. Are you aware, sir, that the FCC does not
17 require competitive carriers to impose a common-line
18 charge?
19 A. Yes.
20 Q. So is the FCC creating a situation where
21 carriers have no end users?
22 A. Well, the question is an interpretation of
23 the CLC's interstate tariff.
24 The language we quoted here is in their
25 tariff, and the whole question in this proceeding is

1 does that tariff, that interstate tariff, apply to
2 the traffic that Qwest has delivered to the LECs, and
3 if that tariff says that end users are established by
4 the purchase of local-exchange service from the LEC's
5 local-exchange tariff and by the application of an
6 end-user common-line charge, then those are
7 requirements before those end users can be considered
8 for the application of switched access charges.
9 If the CLEC chooses not to apply the end-
10 user common-line charge--and I haven't looked at
11 those rules, but if they're free not to do so, then
12 they need to modify their tariff to indicate that in
13 the instance where they waive these charges--and
14 there is no such language in the tariff that I've
15 seen--that the end users are still end users for the
16 purposes of access charges.
17 Q. So a carrier can, if it chooses, impose a
18 common-line charge in its tariff?
19 A. Well, that's your language. I haven't seen
20 the FCC rules that either require or don't require
21 the application of end-user common-line charges by
22 CLECs, but the fact is I've looked at their tariffs.
23 The tariffs require the application of an end-user
24 common-line charge to end users, and they have not
25 done so.

C E R T I F I C A T E

I, the undersigned, a Certified Shorthand Reporter of the State of Iowa, do hereby certify that I acted as the official court reporter at the hearing in the above-entitled matter at the time and place indicated;

That I took in shorthand all of the proceedings had at the said time and place and that said shorthand notes were reduced to typewriting under my direction and supervision, and that the foregoing typewritten pages are a full and complete transcript of the shorthand notes so taken.

Dated at Des Moines, Iowa, this 9th day of February, 2009.

Eddie Spriggs Daniels
Eileen F. Hicks
CERTIFIED SHORTHAND REPORTER

PUBLIC VERSION

STATE OF IOWA
DEPARTMENT OF COMMERCE
UTILITIES DIVISION

COPY

IN RE: QWEST COMMUNICATIONS CORPORATION, Complainant, vs. SUPERIOR TELEPHONE COOPERATIVE; THE FARMERS TELEPHONE COMPANY OF RICEVILLE, IOWA; THE FARMERS & MERCHANTS MUTUAL TELEPHONE COMPANY OF WAYLAND, IOWA; INTERSTATE 35 TELEPHONE COMPANY, d/b/a INTERSTATE COMMUNICATIONS COMPANY; DIXON TELEPHONE COMPANY; REASNOR TELEPHONE COMPANY, LLC; GREAT LAKES COMMUNICATION CORP.; and AVENTURE COMMUNICATION TECHNOLOGY, L.L.C., Respondents;	DOCKET NO. FCU-07-2 VOLUME II (Pages 776-1094)
REASNOR TELEPHONE COMPANY, LLC, Counterclaimant, vs. QWEST COMMUNICATIONS CORPORATION, Counterclaim Respondent	

Hearing Room, 350 Maple Street
Des Moines, Iowa
Friday, February 6, 2009

Met, pursuant to adjournment, at 8:30 a.m.

BEFORE: THE IOWA UTILITIES BOARD

KRISTA K. TANNER, Board Member (Presiding)
DARRELL HANSON, Board Member

JACKIE M. SINNOTT - CERTIFIED SHORTHAND REPORTER
EILEEN HICKS - CERTIFIED SHORTHAND REPORTER

1 BOARD MEMBER TANNER: I don't see anyone
2 taking notes. It is a possibility, you say?
3 THE WITNESS: I think that's a possibility,
4 yes.
5 BOARD MEMBER TANNER: Okay. Also on page
6 117 of your direct testimony you recommend the Board
7 prohibit LECs from participating in traffic
8 laundering. Again, if the Board only has intrastate
9 access jurisdiction, how would this resolve the
10 larger problem which also seems to be on the
11 interstate access side?
12 THE WITNESS: This you could solve both on
13 the interstate and intrastate side because you have
14 control over the telephone numbers that are assigned
15 to the LECs. You also have control over the
16 certification of the LECs in terms of what
17 territories they can serve.
18 So if we use Superior as an example, this
19 Board assigned telephone numbers for Superior's use
20 in the Superior exchange, but what they're doing is
21 now using those numbers to provide service in the
22 Great Lakes/Spencer exchange, so if you were to find
23 that they were using their numbers inappropriately,
24 they would not be able to use those numbers for
25 either intrastate or interstate traffic delivered to

1 C E R T I F I C A T E

2 I, the undersigned, a Certified Shorthand
3 Reporter of the State of Iowa, do hereby certify that
4 I acted as the official court reporter at the hearing
5 in the above-entitled matter at the time and place
6 indicated;

7 That I took in shorthand all of the
8 proceedings had at the said time and place and that
9 said shorthand notes were reduced to typewriting
10 under my direction and supervision, and that the
11 foregoing typewritten pages are a full and complete
12 transcript of the shorthand notes so taken.

13 Dated at Des Moines, Iowa, this 11th day of
14 February, 2009.

15

16

17 CERTIFIED SHORTHAND REPORTER

18

19

20

21

22

23

24

25

PUBLIC VERSION

STATE OF IOWA
DEPARTMENT OF COMMERCE
UTILITIES DIVISION

COPY

IN RE:

QWEST COMMUNICATIONS CORPORATION,

Complainant,

vs.

SUPERIOR TELEPHONE COOPERATIVE; THE FARMERS TELEPHONE COMPANY OF RICEVILLE, IOWA; THE FARMERS & MERCHANTS MUTUAL TELEPHONE COMPANY OF WAYLAND, IOWA; INTERSTATE 35 TELEPHONE COMPANY, d/b/a INTERSTATE COMMUNICATIONS COMPANY; DIXON TELEPHONE COMPANY; REASNOR TELEPHONE COMPANY, LLC; GREAT LAKES COMMUNICATION CORP.; and AVENTURE COMMUNICATION TECHNOLOGY, L.L.C.,

Respondents;

DOCKET NO. FCU-07-2

VOLUME II

(Pages 776-1094)

REASNOR TELEPHONE COMPANY, LLC,

Counterclaimant,

vs.

QWEST COMMUNICATIONS CORPORATION,

Counterclaim Respondent

Hearing Room, 350 Maple Street
Des Moines, Iowa
Friday, February 6, 2009

Met, pursuant to adjournment, at 8:30 a.m.

BEFORE: THE IOWA UTILITIES BOARD

KRISTA K. TANNER, Board Member (Presiding)
DARRELL HANSON, Board Member

JACKIE M. SINNOTT - CERTIFIED SHORTHAND REPORTER
EILEEN HICKS - CERTIFIED SHORTHAND REPORTER

1 Go ahead, Mr. Steese.
2 MR. STEESE: May I use the podium?
3 BOARD MEMBER TANNER: You may.
4 REDIRECT EXAMINATION
5 BY MR. STEESE:
6 Q. Good morning, Mr. Owens.
7 A. Good morning.
8 Q. I would like to start on redirect with some
9 questions from today's--specifically a question asked
10 by Board Member Krista Tanner, and she said what
11 ability, if any, does this Board have to prevent
12 revenue sharing at both the intra and interstate
13 levels, and you contemplated it was intrastate only.
14 Do you recall that?
15 A. Correct.
16 Q. Does the Board have the ability to prevent
17 discrimination of all types?
18 A. I believe the rules of the Iowa Board give
19 it that authority, yes.
20 Q. Does the concept of revenue sharing, as we
21 have in this case, contain facts where the local
22 exchange carrier defendants are using revenues from
23 the interstate access regime to provide kickbacks to
24 their free calling partners?
25 A. In every instance, yes.

1 Q. And given the Board has jurisdiction over
2 discrimination, have you rethought your answer to
3 Board Member Tanner?
4 A. Yes. One additional tool the Board has to
5 consider the issues in this case is if it determines
6 that the LECs are discriminating amongst customers in
7 Iowa by giving--sharing switched access charges with
8 some parties, but not others, because of the use of
9 switched access services to facilitate that
10 discrimination, then it could order that such
11 discrimination cease, which would prevent the LECs
12 from using their interstate tariffs in that manner.
13 So another way of putting it, they're using
14 the interstate tariff to facilitate discrimination.
15 Q. Then do you recall--changing subjects--
16 questions by Mr. Lee relating to the definition of
17 exchange access?
18 A. Yes, I do.
19 Q. And I don't believe it was marked as an
20 exhibit, but you can see the definition of exchange
21 access on the top from the Act, and do you see that
22 the definition of exchange access includes the words
23 "telephone exchange services"? Do you see that,
24 Mr. Owens?
25 A. I'm confused as to what this is.

1 C E R T I F I C A T E

2 I, the undersigned, a Certified Shorthand
3 Reporter of the State of Iowa, do hereby certify that
4 I acted as the official court reporter at the hearing
5 in the above-entitled matter at the time and place
6 indicated;

7 That I took in shorthand all of the
8 proceedings had at the said time and place and that
9 said shorthand notes were reduced to typewriting
10 under my direction and supervision, and that the
11 foregoing typewritten pages are a full and complete
12 transcript of the shorthand notes so taken.

13 Dated at Des Moines, Iowa, this 11th day of
14 February, 2009.

15

16

17 Jackie M Smith Eileen Hicks
18 CERTIFIED SHORTHAND REPORTER

19

20

21

22

23

24

25

PUBLIC VERSION

COPY

STATE OF IOWA
DEPARTMENT OF COMMERCE
UTILITIES DIVISION

IN RE: QWEST COMMUNICATIONS CORPORATION, Complainant, vs. SUPERIOR TELEPHONE COOPERATIVE; THE FARMERS TELEPHONE COMPANY OF RICEVILLE, IOWA; THE FARMERS & MERCHANTS MUTUAL TELEPHONE COMPANY OF WAYLAND, IOWA; INTERSTATE 35 TELEPHONE COMPANY, d/b/a INTERSTATE COMMUNICATIONS COMPANY; DIXON TELEPHONE COMPANY; REASNOR TELEPHONE COMPANY, LLC; GREAT LAKES COMMUNICATION CORP.; and AVENTURE COMMUNICATION TECHNOLOGY, L.L.C., Respondents;	DOCKET NO. FCU-07-2 VOLUME III (Pages 1095-1451)
REASNOR TELEPHONE COMPANY, LLC, Counterclaimant, vs. QWEST COMMUNICATIONS CORPORATION, Counterclaim Respondent	

Hearing Room, 350 Maple Street
Des Moines, Iowa
Monday, February 9, 2009

Met, pursuant to adjournment, at 8:30 a.m.

BEFORE: THE IOWA UTILITIES BOARD

KRISTA K. TANNER, Board Member (Presiding)
DARRELL HANSON, Board Member

JACKIE M. SINNOTT - CERTIFIED SHORTHAND REPORTER
EDIE SPRIGGS DANIELS - CERTIFIED SHORTHAND REPORTER

1 do you know the total amount of revenue that Qwest
2 earned for the traffic at issue in this case
3 factoring in both the off-netting revenue that we
4 just discussed, plus the long-distance toll revenue?
5 A. I do not.
6 Q. Now, in your direct testimony you put forth
7 a $25 million amount of costs paid by Qwest for the
8 traffic at issue in this case. Did you personally
9 have any involvement in calculating that figure?
10 A. I did not personally calculate it. One of
11 the folks that reports to me did.
12 Q. Do you know whether that figure represents
13 both intra- and interstate traffic?
14 A. Yes, it would.
15 Q. It would involve both?
16 A. Yes.
17 Q. As far as you know, has there been a
18 separate figure computed solely for the intrastate
19 costs incurred by Qwest in this case?
20 A. Not to my knowledge. I don't know.
21 Q. And I believe you testified to this earlier,
22 but I need to ask it to make sure. That cost figure
23 contained in your testimony represents a nationwide
24 basis, not an Iowa-specific one, correct?
25 A. Correct.

C E R T I F I C A T E

I, the undersigned, a Certified Shorthand Reporter of the State of Iowa, do hereby certify that I acted as the official court reporter at the hearing in the above-entitled matter at the time and place indicated.

That I took in shorthand all of the proceedings had at the said time and place and that said shorthand notes were reduced to typewriting under my direction and supervision, and that the foregoing typewritten pages are a full and complete transcript of the shorthand notes so taken.

Dated at Des Moines, Iowa, this 13th day of February, 2009.

Jackie M Sinnott
Edie Spriggs Daniels
CERTIFIED SHORTHAND REPORTER

PUBLIC VERSION

COPY

STATE OF IOWA
DEPARTMENT OF COMMERCE
UTILITIES DIVISION

IN RE:	
QWEST COMMUNICATIONS CORPORATION,	
Complainant,	
vs.	DOCKET NO. FCU-07-2
SUPERIOR TELEPHONE COOPERATIVE; THE FARMERS TELEPHONE COMPANY OF RICEVILLE, IOWA; THE FARMERS & MERCHANTS MUTUAL TELEPHONE COMPANY OF WAYLAND, IOWA; INTERSTATE 35 TELEPHONE COMPANY, d/b/a INTERSTATE COMMUNICATIONS COMPANY; DIXON TELEPHONE COMPANY; REASNOR TELEPHONE COMPANY, LLC; GREAT LAKES COMMUNICATION CORP.; and AVENTURE COMMUNICATION TECHNOLOGY, L.L.C.,	VOLUME IV
Respondents.	(Pages 1452-1953)
REASNOR TELEPHONE COMPANY, LLC.,	
Counterclaimant,	
vs.	
QWEST COMMUNICATIONS CORPORATION,	
Counterclaim Respondent.	

Hearing Room, 350 Maple Street
Des Moines, Iowa
Tuesday, February 10, 2009

Met, pursuant to adjournment, at 8:30 a.m.

BEFORE: THE IOWA UTILITIES BOARD

KRISTA K. TANNER, Board Member (Presiding)
DARRELL HANSON, Board Member

EILEEN HICKS - CERTIFIED SHORTHAND REPORTER
JACKIE M. SINNOTT - CERTIFIED SHORTHAND REPORTER

1 but my next question is, are you trained as an
2 attorney, Mr. Appleby?
3 A. I'm an accountant.
4 Q. Fair enough. What is your understanding of
5 reconsideration by the FCC as to an order?
6 A. It would suggest to me that the FCC was
7 given additional information after a ruling that made
8 them potentially change--potentially, I say--change
9 what they concluded in the past. Therefore, they're
10 taking that additional information under
11 consideration before they make a final ruling.
12 Q. And that final ruling has not issued yet,
13 has it?
14 A. No. So therefore we don't know what they're
15 going to say, so this particular order couldn't
16 possibly be the final answer, which is what we're
17 asking this Board to do for us.
18 Q. The FCC's decision regards the interstate
19 access charges at issue in that proceeding?
20 A. I'm sorry. I missed that. I apologize.
21 MS. JOYCE: May that question be read back?
22 (Question read by the reporter.)
23 A. I think it is much broader than just the
24 interstate rates. It was also premised upon the fact
25 of whether the free conference calling companies are,

1 C E R T I F I C A T E

2 I, the undersigned, a Certified Shorthand
3 Reporter of the State of Iowa, do hereby certify that
4 I acted as the official court reporter at the hearing
5 in the above-entitled matter at the time and place
6 indicated.

7 That I took in shorthand all of the
8 proceedings had at the said time and place and that
9 said shorthand notes were reduced to typewriting
10 under my direction and supervision, and that the
11 foregoing typewritten pages are a full and complete
12 transcript of the shorthand notes so taken.

13 Dated at Des Moines, Iowa, this 13th day of
14 February, 2009.

15

16

17 Jacki M Smith
18 CERTIFIED SHORTHAND REPORTER

19

20

21

22

23

24

25

EXHIBIT B

STATE OF IOWA

DEPARTMENT OF COMMERCE

UTILITIES BOARD

IN RE: QWEST COMMUNICATIONS CORPORATION, Complainant, vs. SUPERIOR TELEPHONE COOPERATIVE; THE FARMERS TELEPHONE COMPANY OF RICEVILLE, IOWA; THE FARMERS & MERCHANTS MUTUAL TELEPHONE COMPANY OF WAYLAND, IOWA; INTERSTATE 35 TELEPHONE COMPANY, d/b/a INTERSTATE COMMUNICATIONS COMPANY; DIXON TELEPHONE COMPANY; REASNOR TELEPHONE COMPANY, LLC; GREAT LAKES COMMUNICATION CORP.; AND AVENTURE COMMUNICATION TECHNOLOGY, LLC, Respondents.	DOCKET NO. FCU-07-2

ORDER DOCKETING COMPLAINT, SETTING PROCEDURAL SCHEDULE, DENYING MOTION FOR SUMMARY JUDGMENT, DENYING MOTIONS TO DISMISS, DENYING MOTION TO DEFER DISCOVERY, AND DENYING CROSS-MOTION FOR EMERGENCY EVIDENTIARY HEARING

(Issued May 25, 2007)

BACKGROUND AND PROCEDURAL HISTORY

On February 20, 2007, Qwest Communications Corporation (QCC) filed with the Utilities Board (Board) a complaint pursuant to Iowa Code §§ 476.2, 476.3, and

476.5; 199 IAC Chapters 4 and 7; and 199 IAC 22.14 alleging violations of the terms, conditions, and application of the intrastate tariffs of the following telecommunications carriers: Superior Telephone Cooperative (Superior); The Farmers Telephone Company of Riceville, Iowa (Farmers–Riceville); The Farmers & Merchants Mutual Telephone Company of Wayland, Iowa (Farmers & Merchants); Interstate 35 Telephone Company, d/b/a Interstate Communications Company (Interstate); Dixon Telephone Company (Dixon); Reasnor Telephone Company, LLC (Reasnor); Great Lakes Communications Corp. (Great Lakes); and Aventure Communication Technology, LLC (Aventure) (collectively referred to as Respondents).

In support of its complaint, QCC claims that the Respondents are engaging in a fraudulent practice by creating a scheme that involves free conference calls, chat rooms, adult content calling, podcasts, voice mail, and international calling services. QCC asserts that the Respondents are charging QCC excessive rates for their routing of calls to companies that advertise these free services and then provide kickbacks of a portion of the terminating access revenues to these free calling service companies (FCSCs).

QCC alleges that this scenario is inconsistent with the language and representations in the Iowa Telecommunications Association Tariff No. 1 (ITA Tariff) to which Respondents subscribe. QCC states that Section 1.1 of the ITA Tariff states:

> [T]he provision of [switched access service] is specifically intended to provide exchange network access to [interexchange carriers delivering intrastate switched access traffic] for their own use or in furnishing their authorized intrastate services to End Users, and for

> operational purposes directly related to the furnishing of their authorized services. Operational purposes include testing and maintenance of circuits, demonstration and experimental services and spare services.

(QCC Complaint, p. 12). QCC claims that the revenue received by the Respondents is not being used for the purposes stated in the ITA Tariff. In addition, QCC states that the Respondents are charging QCC for terminating calls via their intrastate tariffs when the rates are not set forth in the tariffs and are for calls that are actually terminated outside of the Respondents' local calling areas.

QCC also alleges that the Respondents are discriminating against their other customers when they share revenues on a preferential basis with the FCSC customers and that in addition to the alleged tariff violations and discrimination, the arrangements between Respondents and the FCSCs constitute an unfair and unreasonable practice under Iowa Code § 476.3.

On March 12, 2007, Reasnor filed a motion for summary judgment with the Board and sought dismissal from this case. Reasnor states that it provides legitimate and necessary access service to QCC and that the Board does not have the authority to regulate the rates of small incumbent local exchange carriers (ILECs), such as Reasnor. Reasnor also states that granting the relief sought by QCC would unlawfully interfere with the Federal Communication Commission's (FCC) regulation of interstate conference call services. Reasnor asserts that the overwhelming majority of the traffic at issue is interstate in nature (more than 99 percent for Reasnor) and that the number of intrastate calls are too de minimus to warrant the exercise of Board jurisdiction.

On March 30, 2007, Superior, Great Lakes, and Aventure filed a joint motion to dismiss, requesting that the Board dismiss QCC's complaint against these three Respondents because the Board lacks the jurisdiction to hear QCC's complaint. In support of their motion, Superior, Great Lakes, and Aventure state that the Board does not have jurisdiction over the rates of small local exchange carriers (LECs) and consequently the Board does not have jurisdiction over the intrastate switched access charges at issue in this case.

Also on March 30, 2007, Farmers–Riceville, Farmers & Merchants, Interstate, and Dixon filed a motion to dismiss QCC's complaint against these four Respondents. In support of their motion, these companies state that QCC's complaint is about the rate QCC is being charged for terminating access, which is an issue over which the Board does not have jurisdiction. In addition, these Respondents state that the Board does not have jurisdiction over the FCSCs, over the payments by the Respondents to the FCSCs, or over the international and interstate traffic, all of which are issues raised in QCC's complaint. In addition to their motion to dismiss, these Respondents also request emergency injunctive relief to prevent Qwest from blocking calls and discontinuing service.

Also on March 30, 2007, Reasnor filed a motion to defer discovery or, in the alternative, to extend the period of time for Reasnor to respond to discovery requests propounded by QCC. In support of its motion, Reasnor states that a ruling on its motion for summary judgment may negate the need for Reasnor to respond to QCC's request. As such, Reasnor requests the Board defer Reasnor's responses until after

the Board rules on its summary judgment motion. In the alternative, Reasnor requests an extension of time to respond to the discovery requests.

On April 10, 2007, QCC filed its response to Reasnor's motion to defer its discovery responses until after the Board rules on the motion for summary judgment. In support of its response, QCC states that discovery is necessary to understand the scope of the parties' conduct in this case.

On April 12, 2007, Reasnor filed a notification with the Board that it had responded to the data requests propounded by QCC.

On April 13, 2007, QCC filed responses to Reasnor's motion for summary judgment as well as responses to the motions to dismiss filed by the other Respondents. In its response to Reasnor's motion, QCC states that Reasnor does not meet the standard for summary judgment because there is an issue of material fact before the Board. In its response to the motions to dismiss filed by the remaining Respondents, QCC states that the Board has specific jurisdiction to hear QCC's complaint and as such, the Respondents' motions should be denied.

Also as part of QCC's April 13, 2007, responses, QCC filed a cross-motion requesting an emergency evidentiary hearing before the Board to enjoin all the Respondents from continuing what QCC terms their "admitted discrimination." QCC states that in Reasnor's motion for summary judgment and in the other Respondents' motions to dismiss, all of the Respondents admit to discriminating against QCC by acknowledging compensation to the FCSCs for acting as a local exchange customer, but requiring other local exchange customers to pay tariffed rates to obtain the same

services. QCC seeks an evidentiary hearing to address this alleged discrimination issue.

On April 25, 2007, Superior, Great Lakes, and Aventure filed a reply to QCC's response to their motion to dismiss as well as a resistance to QCC's cross-motion for emergency evidentiary hearing, stating that the Board does not have jurisdiction over the issues raised by QCC and therefore cannot set an evidentiary hearing to review them.

On April 27, 2007, Reasnor filed a reply to QCC's response to Reasnor's motion for summary judgment as well as a resistance to QCC's cross-motion for emergency evidentiary hearing. Reasnor states that QCC is not a Reasnor local exchange customer and therefore QCC lacks standing to bring a complaint on behalf of retail customers based on Reasnor's alleged discrimination in the provision of local exchange service.

On May 1, 2007, Farmers–Riceville, Farmers & Merchants, Interstate, and Dixon filed their reply to QCC's response to their motion to dismiss as well as a response to QCC's cross-motion for emergency evidentiary hearing stating that such emergency adjudicative relief pursuant to Iowa Code § 17A.18A is only available to prevent immediate danger to the public health, safety, and welfare and not where the only identified harm is to the economic interest of the parties.

On May 15, 2007, QCC filed a motion to compel answers to discovery requests propounded upon Reasnor.

DISCUSSION

This order will address the motions that appear before the Board in this docket at this time. Reasnor seeks a motion for summary judgment while the remaining Respondents seek dismissal of QCC's complaint. Because the issues underlying each motion are substantially similar, the Board will address all three motions at one time. The Board will then address QCC's cross-motion for emergency evidentiary hearing. With respect to Reasnor's motion to defer discovery, the Board notes that on April 12, 2007, Reasnor filed a notification of responding to QCC's data requests. Therefore, this motion is moot. The Board notes, however, that on May 15, 2007, QCC filed a motion to compel additional discovery responses from Reasnor. This order will not address that motion since Reasnor has not had sufficient time to respond.

MOTION FOR SUMMARY JUDGMENT AND MOTIONS TO DISMISS

Reasnor's position:

On March 12, 2007, Reasnor filed a motion for summary judgment seeking dismissal from this action. In support of its motion, Reasnor states that it provides access service to interexchange carriers (IXCs), such as QCC, to permit the IXCs' customers to originate calls from, and terminate calls to, customers located in the Reasnor exchange. Reasnor also states that it has entered into a business relationship with One Rate Conferencing, LLC (One Rate), which is a conference call service provider that does business in the Reasnor exchange. Reasnor asserts that One Rate provides fee-based conference calling services to enable employees of businesses such as retailers, financial institutions, stockbrokers, and law firms to talk

with each other at the same time. Reasnor states that it is reasonable, lawful, and consistent with its tariffs and the public interest for Reasnor to enter into an arrangement with One Rate. Reasnor asserts that its relationship with One Rate increases the use of its rural telephone plant and allows Reasnor to replace deteriorating facilities because of the access revenues it receives as a result of this relationship.

Reasnor also states that it specifically relied on the FCC's decision in AT&T Corp. v. Jefferson Telephone Co., "Memorandum Opinion and Order," 16 FCC Rcd 16130 (2001), when it agreed to share some of its revenue from access services with One Rate. Reasnor states that in AT&T v. Jefferson Telephone, the FCC considered a complaint filed by AT&T concerning the lawfulness of an access revenue sharing arrangement between Jefferson Telephone and an information provider.[1] Reasnor asserts that in that case, Jefferson Telephone, an ILEC, entered into a revenue sharing arrangement with one of its customers, International Audiotext Network (IAN), an information provider of chat line services. Reasnor states that Jefferson Telephone billed AT&T for terminating access service at the tariffed rate and Jefferson Telephone then made payments to IAN based on the amount of access revenues that Jefferson Telephone received from terminating calls to IAN.[2] Reasnor asserts that the FCC dismissed AT&T's complaint, which alleged the access revenue

[1] Reasnor's "Motion for Summary Judgment," pp. 11-12, citing AT&T Corp. v. Jefferson Tel. Co., 16 FCC Rcd 16130 at ¶ 2.
[2] Reasnor's "Motion for Summary Judgment," p. 12, citing Id., at ¶¶ 4-5.

sharing arrangement unlawful, ruling that Jefferson Telephone's revenue sharing arrangement with IAN was a permissible arrangement.[3]

Reasnor also asserts that QCC's complaint should be dismissed with respect to Reasnor because the filed rate doctrine bars both state and federal claims that attempt to challenge the terms of a tariff that a federal agency has allowed to take effect.[4] Reasnor claims that the filed rate doctrine bars any challenge that, "if successful, would have the effect of changing the filed tariff."[5] Reasnor contends that QCC's complaint attempts to change Reasnor's federally-approved tariff rate for terminating access charges, which is contrary to the filed rate doctrine.

Finally, Reasnor asserts that QCC's complaint should be dismissed with respect to Reasnor because the Board lacks the authority to regulate the intrastate rates of small ILECs under Iowa law and because the FCC has exclusive jurisdiction over 99 percent of all the calls terminated by Reasnor to One Rate's conference call platform because they are interstate in nature. Reasnor argues that even though the Board has limited jurisdiction over less than one percent of the intrastate calls terminated by Reasnor to One Rate, if the federal regulation dictates one result and the state regulation another, the state regulation is preempted to the extent that it directly conflicts with federal law.

---

[3] Reasnor's "Motion for Summary Judgment," p. 12, citing Id.
[4] Reasnor's "Motion for Summary Judgment," p. 14, citing Evanns v. AT&T, 229 F.3d 837, 840-41 (9th Cir. 2000).
[5] Reasnor's "Motion for Summary Judgment," p. 16, citing Brown v. MCI WorldCom Network Services, Inc., 277 F.3d 1166, 1170 (9th Cir. 2002).

Respondents' positions:

The remaining Respondents offer arguments similar to Reasnor's when supporting their motions to dismiss QCC's complaint. The remaining Respondents assert that the Board lacks the jurisdiction to hear QCC's complaint. They argue that the issue before the Board is one of economics, not one of law or regulatory policy, and economics is not within the jurisdiction of the Board. Farmers–Riceville, Farmers & Merchants, Interstate, and Dixon also cite to AT&T v. Jefferson Telephone to rebut QCC's argument that the sharing of access revenue with a customer is unlawful and that QCC's assertion of discrimination and unfair and unreasonable practices are unfounded.

QCC's position:

QCC responds to Reasnor by stating that it believes it has evidence indicating that Reasnor has an access revenue sharing relationship with an FCSC other than One Rate and that Jefferson is not controlling in this case because Jefferson never addressed the issue of discrimination in the provision of local exchange service. In addition, QCC responds to all Respondents by asserting that the Board has jurisdiction to hear QCC's complaint against all of the Respondents because the Board has the authority to hear complaints regarding intrastate local exchange service provided pursuant to the Respondents' local exchange tariffs on file with the Board. Finally, QCC asserts that the Board has the authority to hear its complaint against all of the Respondents because the issue before the Board involves discrimination in the provision of local services and the Board has express jurisdiction to hear such complaints.

Discussion:

Summary judgment is appropriate if the entire record, including pleadings and affidavits on file, demonstrates that there is no genuine issue of material fact and the moving party is entitled to judgment as a matter of law. Iowa R. Civ. P. 1.981(3). A motion to dismiss should be granted "only if it is clear that no relief could be granted under any set of facts that could be proved consistent with the allegations." Dible v. Scholl, 410 F. Supp. 2d 807, 810-11 (N.D. Iowa 2006). After reviewing the motions and responses filed by the parties in light of these standards, the Board will deny Reasnor's motion for summary judgment and deny the other Respondents' motions to dismiss.

Reasnor claims that its business relationship with One Rate is consistent with its filed local exchange tariff and that the FCC has approved similar access revenue sharing arrangements. QCC argues, however, that Reasnor has access revenue sharing arrangements with other FCSCs in addition to One Rate and the question remains before the Board as to whether those relationships are also consistent with Reasnor's local exchange tariff.

Reasnor and the other Respondents argue that the Board lacks the authority to regulate the rates of small LECs and that because intrastate traffic makes up such a small percentage of the total traffic terminated by Reasnor and the Respondents, any decision by the Board may be contrary to any decision by the FCC regarding interstate and international traffic and therefore may be preempted to the extent that it directly conflicts with federal law. QCC argues that despite the small percentage of traffic that is intrastate, the Board has jurisdiction to hear the complaint regarding that

traffic. In addition, QCC argues that this case raises the issue of discrimination among the Respondents' local exchange customers and that a claim of discrimination is within the Board's jurisdiction.

The Board finds that there are genuine issues of material fact regarding the revenue sharing arrangements and the Respondents' local and intrastate access service tariffs. The Board also finds that it has the authority to hear QCC's complaint as it relates to intrastate traffic. The Board is aware of its jurisdictional limits with respect to interstate and international traffic, which is at issue in various proceedings before both the FCC and federal courts. However, the Board finds that it is appropriate for the issue as it relates to intrastate traffic to be before the Board at this time.

In its complaint, QCC raises the issue of whether there is unlawful discrimination by the Respondents against their other customers when they share access revenues on a preferential basis with selected customers. The Respondents assert that there is no discrimination at issue in this case because the FCC has determined in AT&T v. Jefferson Telephone that access revenue sharing arrangements are acceptable. QCC distinguishes Jefferson Telephone from the present case by stating that in Jefferson Telephone, the FCC did not address the issue of discrimination, an issue that QCC specifically raised in its initial complaint. Moreover, the Respondents assert that QCC does not have the proper standing to bring this issue before the Board, but QCC contends that the Respondents' alleged discrimination is violative of fair competition and the public interest.

It is clear from the filings submitted by the parties that there is a genuine issue of material fact regarding the issues raised by QCC in its petition. Moreover, given the controversy surrounding the issues raised by QCC, the Respondents have not met the standard for dismissal of QCC's petition. Therefore, the Board will deny Reasnor's motion for summary judgment and deny the other Respondents' motions to dismiss. The Board will docket QCC's complaint pursuant to the statutes and rules cited therein and establish a procedural schedule for an investigation of these issues and any others that may develop during the course of this proceeding.

The Board notes that there were many arguments made by the parties in support of their respective motions and responses. The Board has considered all of the issues raised by the parties, but some of these arguments are not mentioned in this analysis because, at this point of the proceedings, those arguments are not persuasive. If any of these issues develop into more substantive arguments throughout this proceeding, the Board will address them at the appropriate time.

QCC'S CROSS-MOTION FOR EMERGENCY EVIDENTIARY HEARING

Parties' positions:

QCC seeks an emergency evidentiary hearing to discern the scope of the alleged discriminatory conduct of all of the Respondents. Reasnor responds by stating that no emergency hearing is required because QCC is not a local exchange customer of Reasnor and therefore lacks the proper standing to bring such a complaint. Superior, Great Lakes, and Aventure respond by stating that the conduct alleged by QCC relates solely to access rates and the Board has no jurisdiction over access charges, which are exempt from rate regulation under Iowa Code § 476.1.

Finally, Farmers–Riceville, Farmers & Merchants, Interstate, and Dixon respond by stating that Iowa Code § 17A.18A suggests that QCC can only obtain the type of emergency relief requested if it can establish that it is necessary to prevent an immediate danger to the public health, safety, or welfare and that QCC has failed to meet that burden.

Discussion:

The Board agrees with the position asserted by Farmers–Riceville, Farmers & Merchants, Interstate, and Dixon and finds that QCC has not alleged facts sufficient, if proven, to meet its burden under Iowa Code § 17A.18A. That section provides that "an agency may use emergency adjudicative proceedings in a situation involving an immediate danger to the public health, safety, or welfare requiring immediate agency action." QCC's motion for emergency adjudicative proceeding does not allege or demonstrate an immediate danger to the public health, safety, and welfare. QCC identified only a potential economic harm to itself and to other carriers. The Board believes that as a general proposition and in the absence of unique circumstances not alleged here, economic disputes between carriers do not rise to the level of an immediate danger to public health, safety, and welfare so long as no party is threatening to block emergency calls as a response to the economic dispute. Therefore, the Board will deny QCC's request for emergency adjudicative relief.

DOCKETING COMPLAINT

QCC filed its initial complaint pursuant to 199 IAC chapters 4 and 7, and 199 IAC 22.14, and Iowa Code §§ 476.2, 476.3, and 476.5. QCC's complains about the

terms, conditions, and application of the intrastate access services tariff of the named Respondents. The Board has reviewed the complaint and responses filed by the named Respondents and will docket the complaint for further investigation pursuant to Iowa Code §§ 476.2, 476.3, and 476.5, and 199 IAC chapters 4 and 7, and 199 IAC 22.14.

In its complaint, QCC also requested emergency injunctive relief to prohibit the Respondents from directly or indirectly sharing any switched access revenue with any of its customers, to prohibit the Respondents from billing QCC for switched access revenues in excess of the amounts billed during the first six months of 2005, and to permit QCC to block retail and wholesale traffic bound for any of the Respondents' exchanges. As discussed above, the Board finds that QCC has not demonstrated that it will suffer irreparable harm if the injunction is not granted or that there is an immediate danger to the public health, safety, or welfare. Therefore, the Board will deny the request for injunctive relief. However, the Board will set an appropriate procedural schedule to get to the merits of this dispute in a timely manner.

ORDERING CLAUSES

IT IS THEREFORE ORDERED:

1. The complaint filed by Qwest Communications Corporation on February 20, 2007, against the following named Respondents: Superior Telephone Cooperative; The Farmers Telephone Company of Riceville, Iowa; the Farmers & Merchants Mutual Telephone Company of Wayland, Iowa; Interstate 35 Telephone

Company, d/b/a Interstate Communications Company; Dixon Telephone Company; Reasnor Telephone Company, LLC; Great Lakes Communication Corp.; and Aventure Communication Technology, LLC, is docketed for investigation as Docket No. FCU-07-2, pursuant to the statutes and rules identified in the complaint. The complaint is docketed for investigation of the matters asserted in the complaint and such other issues as may develop during the course of the proceedings.

2. The following procedural schedule is established for this proceeding:

a. Qwest Communications Corporation and any intervenors aligned with QCC shall file prepared direct testimony, with supporting exhibits and workpapers, on or before July 9, 2007.

b. Respondents and any intervenors aligned with them shall file rebuttal testimony, with supporting exhibits and workpapers, on or before July 30, 2007.

c. Qwest Communications Corporation and any intervenors aligned with QCC shall file reply testimony, with supporting exhibits and workpapers, on or before August 20, 2007.

d. A hearing for the purpose of receiving testimony and cross-examination of all testimony will commence at 9 a.m. on Wednesday, September 19, 2007, in the Board's hearing room, 350 Maple Street, Des Moines, Iowa. Parties shall appear at the hearing one-half hour prior to the time of hearing to mark exhibits. Persons with disabilities requiring assistive services or devices to observe or participate should contact the Board at 515-281-5256 to request appropriate arrangements.

e. Any party desiring to file a brief may do so on or before October 8, 2007.

3. In the absence of objection, all workpapers shall become a part of the evidentiary record at the time the related testimony and exhibits are entered in the record.

4. In the absence of objection, all data requests and responses referred to in oral testimony or cross-examination, which have not previously been filed with the Board, shall become a part of the evidentiary record. The party making reference to the data request or response shall file an original and six copies at the earliest possible time.

5. In the absence of objection, if the Board calls for further evidence on any issue and that evidence is filed after the close of hearing, the evidentiary record shall be reopened and the evidence will become a part of the evidentiary record three days after filing. All evidence filed pursuant to this paragraph shall be filed no later than five days after the close of hearing.

6. Pursuant to 199 IAC 7.7(2) and (11), the time for filing responses or objections to data requests and motions will be shortened to five days from the date the motion is filed or the data request is served. All data requests and motions should be served by facsimile transfer or by electronic mail, in addition to United States mail.

7. The "Motion for Summary Judgment" filed by Reasnor Telephone Company, LLC, on March 12, 2007, is denied.

8. The "Motion to Dismiss" filed by Superior Telephone Cooperative; Great Lakes Communication Corp.; and Aventure Communication Technology, LLC, on March 30, 2007, is denied.

9. The "Motion to Dismiss" filed by The Farmer Telephone Company of Riceville, Iowa; The Farmers & Merchants Mutual Telephone Company of Wayland, Iowa; Interstate 35 Telephone Company, d/b/a Interstate Communications Company; and Dixon Telephone Company on March 30, 2007, is denied.

10. The motion to defer discovery filed by Reasnor Telephone Company, LLC, on March 30, 2007, is denied for mootness.

11. The cross-motions requesting emergency evidentiary hearing filed by Qwest Communications Corporation on April 13, 2007, are denied.

UTILITIES BOARD

/s/ John R. Norris

/s/ Curtis W. Stamp

/s/ Krista K. Tanner

ATTEST:

/s/ Judi K. Cooper
Executive Secretary

Dated at Des Moines, Iowa, this 25th day of May, 2007.

PUBLIC VERSION

CHESTER J. CULVER, GOVERNOR
PATTY JUDGE, LT. GOVERNOR

JOHN R. NORRIS, CHAIRMAN
CURTIS W. STAMP, BOARD MEMBER
KRISTA K. TANNER, BOARD MEMBER

QWEST COMMUNICATIONS CORPORATION, COMPLAINANT, VS. SUPERIOR TELEPHONE COOPERATIVE; THE FARMERS TELEPHONE COMPANY OF RICEVILLE, IOWA; THE FARMERS & MERCHANTS MUTUAL TELEPHONE COMPANY OF WAYLAND, IOWA; INTERSTATE 35 TELEPHONE COMPANY d/b/a INTERSTATE COMMUNICATIONS COMPANY; DIXON TELEPHONE COMPANY; REASNOR TELEPHONE COMPANY, LLC; GREAT LAKES COMMUNICATIONS CORP.; AND AVENTURE COMMUNICATION TECHNOLOGY, LLC, RESPONDENTS.

Docket No. FCU-07-2

"ORDER DENYING MOTION TO DISMISS MOOT COMPLAINT, GRANTING SUPPLEMENTAL MOTION TO COMPEL, DENYING MOTION FOR RECONSIDERATION, GRANTING MOTION TO EXTEND HEARING, AND SETTING HEARING, AND SETTING AMENDED PROCEDURAL SCHEDULE"

Issued July 3, 2007

Parties Served:

David S. Sather
Qwest Corporation
925 High Street, 9S9
Des Moines, Iowa 50309

Thomas G. Fisher, Jr.
Parrish, Kruidenier, Dunn, Boles, Gribble, Cook, Parrish, Gentry & Fisher, L.L.C.
2910 Grand Avenue
Des Moines, Iowa 50312

Robert F. Holz, Jr.
Davis, Brown Law Firm
The Financial Center
666 Walnut Street, Suite 2500
Des Moines, Iowa 50309

Lawrence P. McLellan
Sullivan & Ward, P.C.
6601 Westown Parkway
Suite 200
West Des Moines, Iowa 50266

John R. Perkins
Consumer Advocate
Iowa Department of Justice
Office of Consumer Advocate
310 Maple Street
Des Moines, IA 50319-0063

CERTIFICATE

The undersigned hereby certifies that the foregoing document has been served upon all parties of record in this proceeding in accordance with the requirements of the rules of the Iowa Utilities Board.

Dated July 3, 2007
Donna Schillinger

d.c. 2007

STATE OF IOWA

DEPARTMENT OF COMMERCE

UTILITIES BOARD

IN RE: QWEST COMMUNICATIONS CORPORATION, Complainant, vs. SUPERIOR TELEPHONE COOPERATIVE; THE FARMERS TELEPHONE COMPANY OF RICEVILLE, IOWA; THE FARMERS & MERCHANTS MUTUAL TELEPHONE COMPANY OF WAYLAND, IOWA; INTERSTATE 35 TELEPHONE COMPANY, d/b/a INTERSTATE COMMUNICATIONS COMPANY; DIXON TELEPHONE COMPANY; REASNOR TELEPHONE COMPANY, LLC; GREAT LAKES COMMUNICATION CORP.; AND AVENTURE COMMUNICATION TECHNOLOGY, LLC, Respondents.	DOCKET NO. FCU-07-2

ORDER DENYING MOTION TO DISMISS MOOT COMPLAINT, GRANTING SUPPLEMENTAL MOTION TO COMPEL, DENYING MOTION FOR RECONSIDERATION, GRANTING MOTION TO EXTEND HEARING, AND SETTING AMENDED PROCEDURAL SCHEDULE

(Issued July 3 , 2007)

On February 20, 2007, Qwest Communications Corporation (QCC) filed with the Utilities Board (Board) a complaint against the above named Respondents,

asserting in part that the Respondents are engaging in a fraudulent practice by creating a scheme that involves free conference calls, chat rooms, adult content calling, podcasts, voice mail, and international calling services. QCC's complaint alleges that the Respondents are charging QCC excessive rates to route calls to companies that advertise these free services and then provide kickbacks of a portion of the terminating access revenues to these free calling service companies (FCSCs).

On June 8, 2007, Reasnor Telephone Company, LLC (Reasnor), filed with the Board a motion to dismiss the complaint filed by QCC on February 20, 2007, on grounds of mootness. In support of its motion, Reasnor states that it began providing intrastate access service to QCC in January 2006, after acquiring the Reasnor, Iowa, exchange from Sully Telephone Association, Inc. Reasnor asserts that since January 2006, Qwest has paid Reasnor a total of $6,123.92 for intrastate access service. Reasnor states that it decided to moot QCC's complaint, without admitting liability, by providing QCC with a full credit for the entire amount that QCC has paid to Reasnor for intrastate access service. Reasnor also states that it will not continue to bill QCC in the future for intrastate access service for the termination of conference calls, unless Reasnor obtains an order from the Board authorizing it to do so. Reasnor asserts that the full credit given to QCC is the maximum amount that the Board could award QCC, therefore, QCC's complaint against Reasnor is moot and should be dismissed.

On June 19, 2007, QCC filed a resistance to Reasnor's motion to dismiss. As part of its resistance, QCC states that according to its data, Reasnor began charging

QCC terminating access charges prior to January 2006, as asserted by Reasnor. QCC states that because of the discrepancy in starting date, the amount of money that Reasnor has paid to QCC is subject to question. QCC also asserts that Reasnor's attempt to moot QCC's complaint ignores QCC's claim of discrimination in the provision of local exchange service and fails to address the issues of declaratory and prospective relief.

The Board will deny Reasnor's motion to dismiss. Despite Reasnor's credit to QCC, there is a genuine issue of material fact regarding the amount. Reasnor claims that it began assessing QCC intrastate switched access service charges in January 2006. QCC counters that Reasnor began assessing access service charges to QCC prior to January 2006. Since a factual dispute remains before the Board regarding the timing of the access charge assessment and consequently of the amount of the credit, QCC's complaint is not moot and the Board cannot grant Reasnor's motion. Moreover, even if the credit issue were resolved, QCC has made other claims that would not be resolved by a credit alone, so even a larger credit would not make the matter entirely moot. Reasnor's motion to dismiss will be denied.

On June 12, 2007, QCC filed a supplemental motion to compel Reasnor to provide complete answers to its second set of interrogatories and data requests. QCC states that in response to QCC's second set of written discovery, Reasnor mischaracterizes the nature of QCC's discovery requests and argues that the requests are overbroad, burdensome, and not relevant, claiming that QCC's inquires should be limited to intrastate traffic. QCC asserts that its second set of discovery

requests were designed to elicit information regarding the issues raised in QCC's complaint, namely discriminatory conduct in the provision of local services, the practices of any incumbent local exchange carrier (ILEC) in Iowa regarding its tariffs filed with the Board, whether an ILEC is charging terminating access charges without terminating the traffic locally, and whether intrastate services are appropriately set forth in tariffs and are sold pursuant to tariff terms. QCC asserts that the Board has jurisdiction to hear all of these issues. In addition, QCC states that even if a particular type of traffic falls outside the Board's jurisdiction, specifically interstate traffic, discovery is not restricted so long as it is reasonably calculated to lead to the discovery of admissible evidence.

On June 22, 2007, Reasnor filed a resistance to QCC's supplemental motion to compel. Reasnor used its resistance to QCC's motion primarily as an opportunity to argue in support of its motion to dismiss. Reasnor also states that QCC's complaint is moot because QCC received a full credit with respect to intrastate calls and because of Reasnor's agreement to refrain from billing QCC for intrastate conference calls in the future. Reasnor argues that since QCC's complaint is moot, the Board should deny QCC's supplemental motion to compel and reconsider the Board's June 18, 2007, order in this docket requiring Reasnor to fully respond to QCC's first set of discovery requests.

The Board will grant QCC's supplemental motion to compel filed on June 12, 2007. The arguments raised by Reasnor supporting its responses to QCC's supplemental motion are now moot following the Board's previous discussion

regarding Reasnor's motion to dismiss. The Board will also deny Reasnor's request to reconsider the Board's June 18, 2007, order because the Board has determined that QCC's complaint is not moot.

The Board finds that QCC's second set of discovery requests were reasonably designed to elicit information regarding the issues raised in its complaint and that the Board has jurisdiction to hear all of these issues. In addition, the Board finds that QCC's discovery requests need not be restricted to intrastate traffic as long as requests regarding interstate traffic are reasonably calculated to lead to the discovery of admissible evidence as provided for in Iowa Rule of Civil Procedure 1.503(1). Based on these findings, the Board directs Reasnor to provide complete and thorough responses to the second set of discovery requests propounded by QCC on Reasnor.

On June 12, 2007, QCC filed a motion to extend the hearing date in this proceeding. Pursuant to the procedural schedule issued by the Board on May 25, 2007, the hearing in this proceeding is scheduled to begin on September 19, 2007. In support of its request to continue the hearing date, QCC states that it has served discovery requests on all of the eight respondents in this matter. In addition, QCC states that it has served 25 parties with subpoenas for additional discovery. QCC states that it must gather the information requested, and assimilate and analyze the information. QCC asserts that this work cannot reasonably be completed under the existing procedural schedule. No objection to QCC's motion has been filed.

The Board has reviewed QCC's request and finds that it is reasonable. Since there is no objection to QCC's request, the Board will grant the motion and extend the hearing date until October 23, 2007. An amended procedural schedule will be established accordingly.

IT IS THEREFORE ORDERED:

1. The motion to dismiss filed by Reasnor Telephone Company, LLC, on June 8, 2007, is denied as described in this order.

2. The supplemental motion to compel filed by Qwest Communications Corporation on June 12, 2007, is granted as described in this order.

3. The motion for reconsideration filed by Reasnor Telephone Company, LLC, on June 22, 2007, is denied as described in this order.

4. The motion to extend the hearing in this proceeding filed by Qwest Communications Corporation on June 12, 2007, is granted as described in this order.

5. The procedural schedule in this docket is amended to reflect the following changes:

   a. Qwest Communications Corporation (QCC) and any intervenors aligned with QCC shall file prepared direct testimony, with supporting exhibits and workpapers, on or before August 6, 2007.

   b. Respondents and any intervenors aligned with them shall file rebuttal testimony, with supporting exhibits and workpapers, on or before September 4, 2007.

c. Qwest Communications Corporation and any intervenors aligned with QCC shall file reply testimony, with supporting exhibits and workpapers, on or before September 24, 2007.

d. A hearing for the purpose of receiving testimony and cross-examination of all testimony will commence at 9 a.m. on Tuesday, October 23, 2007, in the Board's hearing room, 350 Maple Street, Des Moines, Iowa. Parties shall appear at the hearing one-half hour prior to the time of hearing to mark exhibits. Persons with disabilities requiring assistive services or devices to observe or participate should contact the Board at 515-281-5256 to request appropriate arrangements.

e. Any party desiring to file a brief may do so on or before November 19, 2007.

UTILITIES BOARD

ATTEST:

Executive Secretary, Deputy

Dated at Des Moines, Iowa, this 3rd day of July, 2007.

Exhibit 59

Letter from James U. Troup and Tony S. Lee to Michael J. Hunseder and James F. Bendernagel (dated Mar. 23, 2017)

HIGHLY CONFIDENTIAL MATERIALS OMITTED

Exhibit 60

GLCC FCC Tariff No. 2
(filed Jan. 11, 2012)

ACCESS SERVICE

REGULATIONS, RATES AND CHARGES
APPLYING TO THE PROVISION OF ACCESS SERVICE
FOR CONNECTION TO INTERSTATE COMMUNICATIONS
FACILITIES AND SERVICES FURNISHED BY

GREAT LAKES COMMUNICATION CORP.

AND ANY CONCURRING CARRIERS BETWEEN
POINTS IN THE UNITED STATES AS SPECIFIED HEREIN

This FCC Tariff No. 2 **CANCELS** and **REPLACES** FCC Tariff No. 1 currently on file with the Commission, effective January 26 , 2012.

Transmittal No. 2
Issued: January 11, 2012

Effective: January 26, 2012

Josh Nelson
Great Lakes Communication Corp.
1713 McNaughton Way
Spencer, IA 51301

Great Lakes Communication Corp.

TARIFF F.C.C. NO. 2
Original Page No. 1

ACCESS SERVICE

CHECK SHEET

Title Page and Pages 1 through 56 of this Tariff are effective as of the date shown. Original and revised pages as named below contain all changes from the original Tariff that are in effect on the date hereof.

Page	Revision	Page	Revision	Page	Revision
Title		30	Original		
Page	Original	31	Original		
1	Original	32	Original		
2	Original	33	Original		
3	Original	34	Original		
4	Original	35	Original		
5	Original	36	Original		
6	Original	37	Original		
7	Original	38	Original		
8	Original	39	Original		
9	Original	40	Original		
10	Original	41	Original		
11	Original	42	Original		
12	Original	43	Original		
13	Original	44	Original		
14	Original	45	Original		
15	Original	46	Original		
16	Original	47	Original		
17	Original	48	Original		
18	Original	49	Original		
19	Original	50	Original		
20	Original	51	Original		
21	Original	52	Original		
22	Original	53	Original		
23	Original	54	Original		
24	Original	55	Original		
25	Original	56	Original		
26	Original				
27	Original				
28	Original				
29	Original				
30	Original				
31	Original				
32	Original				

* Pages included in current filing.

Transmittal No. 2
Issued: January 11, 2012

Effective: January 26, 2012

Josh Nelson
Great Lakes Communication Corp.
1713 McNaughton Way
Spencer, IA 51301

ACCESS SERVICE

TABLE OF CONTENTS

	Page
ISSUING CARRIER	Title Page
CHECK SHEET	1
TABLE OF CONTENTS	2
OTHER PARTICIPATING CARRIERS	5
SYMBOLS	6
ABBREVIATIONS	6
DEFINITIONS	7
REFERENCE TO OTHER TARIFFS AND/OR PUBLICATIONS	11
1. APPLICATION OF TARIFF	12
1.1 General	12
1.1.1 No Waiver	12
1.1.2 Partial Invalidity	12
1.1.3 Title or Ownership Rights	12
2. GENERAL REGULATIONS	13
2.1 Undertaking of the Company	13
2.1.1 Scope	13
2.1.2 Limitations	14
2.1.3 Provision of Services, Equipment and Facilities	17
2.1.4 Services, Equipment or Facilities	18
2.1.5 Notification of Service-Affecting Activities	19
2.2 Obligations of the Buyer	20
2.2.1 General Obligations	20
2.2.2 Claims	23
2.2.3 Buyer Equipment and Channels	23
3. PAYMENT AND BILLING	27
3.1 Payment Arrangements	27
3.1.1 Payment for Service	27
3.1.2 Billing and Collection of Charges	28
3.1.3 Advance Payments	29
3.1.4 Jurisdictional Reporting Requirements	29
3.1.5 Deposits	37
3.1.6 Discontinuance of Service	39
3.1.7 Billing Disputes	40

Josh Nelson
Great Lakes Communication Corp.
1713 McNaughton Way
Spencer, IA 51301

TABLE OF CONTENTS (Cont'd)

				Page
3.	PAYMENT AND BILLING (Cont'd)			
	3.2	Access Billing		42
		3.2.1	Billing Standards	42
		3.2.2	Distance Charges	43
		3.2.3	Suspension, Termination or Refusal of Service	44
4.	CONSTRUCTIVE ORDERING			45
	4.1	General		45
		4.1.1	Constructive Ordering	45
5.	SWITCHED ACCESS SERVICE			45
	5.1	General		45
		5.1.1	Rate Categories	46
	5.2	Switched Access Service Specifications - Company Requirements		49
		5.2.1	Network Management	49
		5.2.2	Transmission Specifications	49
		5.2.3	Testing	49
		5.2.4	Report Requirements	49
	5.3	Rate Regulations		50
		5.3.1	Description and Application of Rates	50
		5.3.2	Contracts and Individual Case Basis (ICB) Rates	50
		5.3.3	Pass-Through of Taxes, USF, and/or Regulatory Fees	50
6.	MISCELLANEOUS SERVICES			51
	6.1	General		51
		6.1.1	Presubscription	51
		6.1.2	Maintenance of Service	51
		6.1.3	International Blocking Service	52
		6.1.4	900 Blocking Service	52
		6.1.5	Access Order Charge	53

Josh Nelson
Great Lakes Communication Corp.
1713 McNaughton Way
Spencer, IA 51301

ACCESS SERVICE

TABLE OF CONTENTS (Cont'd)

			Page
7.	RATES AND CHARGES		54
	7.1	General	54
	7.2	Switched Access Service	54
		7.2.1 Recurring Rate Elements	54
		7.2.2 Rates Reflect Tariffed Rates of Appropriate ILECs	55
		7.2.3 800 Database Access Service	55
	7.3	Other Services	56
		7.3.1 Technician Hourly Rates	56
		7.3.2 Unauthorized PIC Change Charge	56
		7.3.3 Access Order Charge	56

Josh Nelson
Great Lakes Communication Corp.
1713 McNaughton Way
Spencer, IA 51301

ACCESS SERVICE

CONCURRING CARRIERS

NO CONCURRING CARRIERS

CONNECTING CARRIERS

NO CONNECTING CARRIERS

OTHER PARTICIPATING CARRIERS

NO OTHER PARTICIPATING CARRIERS

Josh Nelson
Great Lakes Communication Corp.
1713 McNaughton Way
Spencer, IA 51301

ACCESS SERVICE

SYMBOLS

The following symbols shall be used in this Tariff for the purpose indicated below:

(C) To Signify changed regulation

(D) To Signify discontinued regulation or rate

(I) To Signify increase

(L) To Signify matter relocated without change

(N) To Signify new rate or regulation

(R) To Signify reduction

(S) To Signify reissued matter

(T) To Signify a change in text but no change in rate or regulation

ABBREVIATIONS

CABS	Carrier Access Billing System	MRC	Monthly Recurring Charge
FCC	Federal Communications Commission	PIC	Presubscribed Interexchange Carrier
FG	Feature Group	PIU	Percent Interstate Use
ICB	Individual Case Basis	PVU	Percentage VoIP Usage
ILEC	Incumbent Local Exchange Carrier	POP(s)	Point(s) of Presence
IXC	Interexchange Carrier	SLC	Subscriber Line Charge
LEC	Local Exchange Carrier	USF	Universal Service Fund
LERG	Local Exchange Routine Guide		
LNP	Local Number Portability		
MOU	Minutes of Use		

Josh Nelson
Great Lakes Communication Corp.
1713 McNaughton Way
Spencer, IA 51301

ACCESS SERVICE

DEFINITIONS

Access Charge: Charges assessed to the Buyer through which the Company is compensated for providing Access.

Access or Access Service: Access or Access Service includes services and facilities provided for the origination or termination of any interstate or foreign Telecommunication regardless of the technology used in transmission. This includes, but is not limited to, local exchange, long distance, and data communications services that may use either TDM or Internet Protocol ("IP") or other technology. Access Service includes the functional equivalent of the incumbent local exchange carrier interstate exchange access services typically associated with following rate elements: carrier common line (originating); carrier common line (terminating); local end office switching; interconnection charge; information surcharge; tandem switched Transport Termination (fixed); tandem switched Transport Facility (per mile); tandem switching.

Advance Payment: Part or all of a payment required before the start of service.

Buyer: The term "Buyer" refers to an Interexchange Carrier utilizing the Company's Access Service to complete a Call to or from End Users. The Buyer is responsible for the payment of charges for any service it takes from the Company, and compliance with the terms and conditions of this Tariff.

Call: A communication attempt for which the complete address code (e.g., 0-, 911, or 10 digits) is provided to the Company's switch or equivalent facility. The term "Call" expressly includes communications that are delivered to, or received from, persons or entities that include, but are not limited to: conference call providers, chat line providers, calling card providers, call centers, help desk providers, and residential and/or business users.

Company: Great Lakes Communication Corp., the issuer of this Tariff, a competitive local exchange carrier.

Commission (FCC): The Federal Communications Commission.

Constructive Order: In the absence of a written or oral order, any delivery of Calls to or receipt of Calls from the Company's Network constitutes a Constructive Order to purchase switched Access Services as described herein. Similarly, the selection of an IXC as an End User's Presubscribed Interexchange Carrier constitutes a Constructive Order for switched Access Service by the IXC.

Customer of an Interstate or Foreign Telecommunications Service: A "Customer of an Interstate or Foreign Telecommunications Service" includes any person or entity who sends or receives an interstate or foreign Telecommunications service transmitted to or from a Buyer across the Company's Network, provided that the person or entity must pay a fee to the Company for telecommunications service. Customer of an Interstate or Foreign Telecommunications Service may include, but is not limited to, conference call providers, chat line providers, calling card providers, call centers, help desk providers, and residential and/or business service subscribers.

Josh Nelson
Great Lakes Communication Corp.
1713 McNaughton Way
Spencer, IA 51301

ACCESS SERVICE

DEFINITIONS (Cont'd)

End User Designated Premises (EDP): A location designated by the End User for the purposes of connecting to the Company's services. In some circumstances, the EDP may be located in Company's central office.

End User: The term "End User" means any Customer of an Interstate or Foreign Telecommunications Service that is not a carrier, except that a carrier other than a telephone company shall be deemed to be an "End User" when such carrier uses a Telecommunications service for administrative purposes and a person or entity that offers Telecommunications services exclusively as a reseller shall be deemed to be an "End User" if all resale transmissions offered by such reseller originate on the premises of such reseller. An End User must pay a fee to the Company for telecommunications service. Other carriers, including IXCs, are not considered to be End Users under the terms of this Tariff, unless the Company consents to such classification in writing.

Individual Case Basis or ICB: An arrangement whereby the terms, conditions, rates, charges and/or services are developed or modified based on the specific and unique circumstances of the Buyer's situation. ICB specialized rates, services or charges will be made available to similarly situated Buyers on a non-discriminatory basis.

Interexchange Carrier (IXC): Any individual, partnership, association, joint-stock company, trust, governmental entity, corporation or any other entity engaged in the provision of intrastate, interstate or international communication for hire by any means between two or more exchanges.

Late Payment Fee: An amount computed as 1.5% of the unpaid balance per month or portion thereof for the period from the due date of any bill until the payment is received.

Local Exchange: A geographic area established by the Company for the administration and pricing of Telecommunications services. The Company is not bound by the definition of "exchange" or "local exchange" as defined by the National Exchange Carrier Association, by IXCs, or by the ILECs whose tariffed rates the Company matches. Unless defined otherwise by the Company, the Company's Local Exchanges are the same as the geographic area where the Company provides service to End Users.

Minute of Use (MOU): Denotes the number of minutes for which a Buyer is billed in relation to any usage-sensitive service element provided by the Company.

Network: Refers to the Company's facilities, equipment, and services provided under this Tariff. The Company may provide and own its own facilities, equipment or services, or may obtain and use those of other providers.

Josh Nelson
Great Lakes Communication Corp.
1713 McNaughton Way
Spencer, IA 51301

ACCESS SERVICE

DEFINITIONS (Cont'd)

Nonrecurring Charge: A one-time charge or special fee, generally applied to activities associated with the installation or establishment of services, facilities, or equipment, construction, rearrangements, and/or optional features and functions.

Point of Presence: A physical place where a carrier accesses the Company's network.

Presubscription: An arrangement whereby an End User selects and designates to the Company or other local exchange carrier an IXC that the End User wishes to use, without dialing an access code, for making long-distance Calls. The selected IXC is referred to as the Presubscribed Interexchange Carrier (PIC).

Recurring Charges (MRCs): Monthly or other periodic (as specified) charges to the Buyer for services, facilities and equipment which continue for the agreed-upon duration of the service.

Service(s): Interstate Access Service(s). Service provided to a Buyer by the Company pursuant to this tariff.

Simple Interest: The interest rate that is set for the Federal Reserve's two-year Treasury bill on the most recent January 31st.

Switched Access Service: Access to the Network of the Company for the purpose of receiving or delivering Calls.

Telecommunications: The transmission, between or among points specified by the user, of information of the user's choosing, without change in the form or content of the information as sent and received.

Traffic: Another term for Calls. These terms expressly include communications that are delivered to, or received from, persons or entities that include, but are not limited to: conference call providers, chat line providers, calling card providers, call centers, help desk providers, and residential and/or business users.

Transport Facility: Where separately invoiced, provides for the transmission of calls between the End User's designated premises and the switch(es) where the Buyer's traffic is switched to originate or terminate an End User's communication.

Transport Interconnection: Where separately invoiced, recovers the costs associated with Local Transport that are not recovered by the Entrance Facility, Direct Trunked Transport, Tandem Switched Transport, Multiplexing or dedicated signaling (i.e. SS7) rates. This rate applies to both Tandem Switched and Direct Trunked Access minutes. The rate is applied at the Company switch.

Transport Termination: Where separately invoiced, provides for the line or trunk side arrangements that terminate the Local Transport facilities on the Company switch(es).

Josh Nelson
Great Lakes Communication Corp.
1713 McNaughton Way
Spencer, IA 51301

DEFINITIONS (Cont'd)

VoIP-PSTN Traffic: The term VoIP-PSTN Traffic shall have the meaning denoted in the Federal Communications Commission Report and Order in WC Docket Nos. 10-90, etc., F.C.C. Release No. 11-161 (November 18, 2011). It is traffic exchanged over PSTN (Public Switched Telephone Network) facilities that originates and/or terminates in IP (Internet Protocol) format.

Wire Center: Generic term for point on a carrier network from which an End User normally receives a dial tone.

Josh Nelson
Great Lakes Communication Corp.
1713 McNaughton Way
Spencer, IA 51301

ACCESS SERVICE

REFERENCE TO OTHER TARIFFS AND/OR PUBLICATIONS

The following tariffs are referenced in this Tariff and may be obtained as shown:

National Exchange Carrier Association
100 S. Jefferson
Whippany, NJ
Wire Center Information
Tariff FCC No. 4

National Exchange Carrier Association
100 S. Jefferson
Whippany, NJ
Wire Center Information
Tariff FCC No. 5

The Local Exchange Routing Guide (LERG) is referenced in this Tariff may be obtained from:

Telcordia Technologies
Customer Services Division
60 New England Avenue
Piscataway, NJ

ACCESS SERVICE

1. APPLICATION OF TARIFF

1.1 General

This Tariff sets forth the regulations, rates and charges for the provision of interstate Access Services and facilities (hereinafter "Services") by Great Lakes Communication Corp. The rates for the Services, and associated elements, described herein are set to those rates charged by the price cap LEC with the lowest switched access rates operating in the Company's service area in accordance with §61.26(g) of the Commission's Rules, 47 C.F.R. §61.26(g).

1.1.1 No Waiver

No term or provision in this Tariff shall be waived, unless such waiver or consent is in writing and signed by the Company and the Buyer to which it is attributed. No consent by the Company or Buyer, as applicable, to, or waiver of, a breach or default by the other, whether express or implied, shall constitute a consent to or waiver of, any subsequent breach or default.

1.1.2 Partial Invalidity

If any provision of this Tariff shall be held to be invalid or unenforceable, such invalidity or unenforceability shall not invalidate or render the terms of this Tariff unenforceable, but rather this Tariff shall be construed as if not containing the invalid or unenforceable provision.

1.1.3 Title or Ownership Rights

The payment of rates and charges by Buyers for the Services offered under the provisions of this Tariff does not assign, confer, or transfer leasehold, title, or ownership rights to proposals, equipment, or facilities developed or utilized respectively by the Company in provision of such Services.

Josh Nelson
Great Lakes Communication Corp.
1713 McNaughton Way
Spencer, IA 51301

2. GENERAL REGULATIONS

2.1 Undertaking of the Company

2.1.1 Scope

The Company undertakes to provide the Service(s), subject to the availability of necessary facilities. The Company is responsible only for the installation, operation, and maintenance of the Services and facilities it provides. The Company does not warrant that its services and facilities meet standards other than those expressly set forth in this Tariff.

2.1.1.1 If any Buyer makes use of any Service, the Buyer shall be deemed to have made a Constructive Order for the Service, and the failure to enter into a written or oral service agreement will not eliminate any payment obligation under this Tariff.

2.1.1.2 The Buyer shall be solely responsible for message content.

2.1.1.3 The Company will, for maintenance purposes, test its service to the extent necessary to detect and/or clear troubles.

2.1.1.4 Service may be terminated by the Company on written notice to the Buyer if the Buyer is using the service in violation of the Tariff or if the Buyer is using the service in violation of the law.

2.1.1.5 Assignment or Transfer of Services

(a) The Buyer may assign or transfer the use of Service(s) provided under this Tariff only if approved by Company in writing and only if assignee or transferee assumes any and all outstanding indebtedness for such Services, and any applicable unexpired portion of a minimum period and/or any termination liability applicable to such Service(s).

(b) The assignment or transfer of Services does not relieve or discharge the assignor or transferor from remaining jointly or severally liable with the assignee or transferee for any obligations existing at the time of the assignment or transfer.

Josh Nelson
Great Lakes Communication Corp.
1713 McNaughton Way
Spencer, IA 51301

2. GENERAL REGULATIONS (Cont'd)

2.1 Undertaking of the Company (Cont'd)

2.1.2 Limitations

2.1.2.1 Provisioning Sequence

The Services offered herein will be provided to Buyers on a first-come, first-served basis.

2.1.2.2 Liability

(a) With respect to any and all claims or suits, regardless of the theory of liability, the liability of the Company for damages arising out of the installation, provision, furnishing, termination, maintenance, repair, or restoration of its Services and Facilities, including but not limited to mistakes, omissions, interruptions, delays, or errors or other defects, representations, or use of these services or arising out of failure to furnish the Service, whether caused by acts or omission, shall be limited to an amount which shall not exceed an amount equal to the proportionate charge for the period during which the Service was affected. The grant of such an amount for interruption shall be the sole remedy of the Buyer and the sole liability of the Company. The Company will not be liable for any direct, indirect, incidental, special, consequential, exemplary or punitive damages to Buyer as a result of any Company Service or equipment, or facilities, or the acts or omissions or negligence of the Company's employees, agents, or contractors.

Josh Nelson
Great Lakes Communication Corp.
1713 McNaughton Way
Spencer, IA 51301

2. GENERAL REGULATIONS (Cont'd)

2.1 Undertaking of the Company (Cont'd)

2.1.2 Limitations (Cont'd)

2.1.2.2 Liability (Cont'd)

(b) The Company shall not be liable for any delay or failure of performance or equipment due to causes beyond its control, including but not limited to: acts of unaffiliated third parties, acts of God, fire, flood, explosion, or other catastrophes; any law, order, regulation, direction, action, or request of the U. S. Government, or of any department, agency, commission, bureau, corporation, or other instrumentality of any one or more of these federal, state, or local governments, or of any civil or military authority; national emergencies; insurrections, riots, wars; unavailability of rights-of-way or materials; or strikes, lockouts, work stoppages, or other labor difficulties.

(c) The Company shall not be liable for: (a) any act or omission of any entity furnishing to the Company or to the Company's Buyers facilities or equipment used for connection to or in connection with the Company's Services; or (b) the acts or omissions of other common carriers or warehousemen.

(d) The Company shall not be liable for any damages or losses due to the fault or negligence of the Buyer arising from or related to the failure or malfunction of Buyer-provided equipment or facilities.

(e) The Company does not guarantee nor make any warranty with respect to Services it provides for use in an explosive atmosphere. The Buyer shall indemnify, defend, and hold the Company harmless from any and all loss, claims, demands, suits, or other action, or any liability whatsoever, whether suffered, made, instituted, or asserted by any loss, damage, or destruction of any property, whether owned by the Buyer or others, caused or claimed to have been caused directly or indirectly by the installation, operation, failure to operate, maintenance, removal or use of any Service so provided.

Josh Nelson
Great Lakes Communication Corp.
1713 McNaughton Way
Spencer, IA 51301

2. GENERAL REGULATIONS (Cont'd)

2.1 Undertaking of the Company (Cont'd)

2.1.2 Limitations (Cont'd)

2.1.2.2 Liability (Cont'd)

(f) The Company is not liable for any defacement of or damage to Buyer property resulting from the furnishing of Service(s) or equipment or the installation or removal thereof, unless such defacement or damage is caused by negligence or willful misconduct of the Company's employees, contractors, or agents.

(g) The Company shall be indemnified, defended and held harmless by the Buyer against any claim, loss or damage arising from the Buyer's use of Service(s), involving claims for libel, slander, invasion of privacy, or infringement of copyright arising from the Buyer's own communications.

(h) The Company makes no warranties, express or implied either in fact or by operation or otherwise, including warranties of merchantability or fitness for a particular use.

(i) No action or proceeding against the Company arising out of a Service provided under this Tariff shall be commenced more than two years after the Service is rendered.

Josh Nelson
Great Lakes Communication Corp.
1713 McNaughton Way
Spencer, IA 51301

2. GENERAL REGULATIONS (Cont'd)

2.1 Undertaking of the Company (Cont'd)

2.1.3 Provision of Services, Equipment, and Facilities

2.1.3.1 The Company shall use reasonable efforts to make available Service(s) to a Buyer on or before a requested date, subject to the provisions of, and compliance by the Buyer with, the regulations contained in this Tariff, and subject to the availability of facilities and services, including those provided by other carriers relied upon by the Company for the provision of the Company's Service(s). The Company does not guarantee availability by any such date and shall not be liable for any delays in commencing Service to any Buyer.

2.1.3.2 The Company shall use reasonable efforts to maintain Services, facilities and equipment that it may furnish to the Buyer. The Buyer may not, nor may Buyer permit others to rearrange, disconnect, remove, attempt to repair, or otherwise interfere with any of the Services, facilities, or equipment installed by the Company, except upon written consent of the Company.

2.1.3.3 The Company may substitute, change, or rearrange any equipment or facility at any time and from time to time, but shall not thereby alter the technical parameters of the Service provided the Buyer.

2.1.3.4 Any equipment that the Company may provide or install on Buyer's property for use in connection with the Service(s) shall not be used for any purpose other than that for which the Company provided it.

2.1.3.5 The option exclusive to request a specific path or channel is not provided to the Buyer, but is within the purview of the Company.

Josh Nelson
Great Lakes Communication Corp.
1713 McNaughton Way
Spencer, IA 51301

2. GENERAL REGULATIONS (Cont'd)

2.1 Undertaking of the Company (Cont'd)

2.1.3 Provision of Services, Equipment, and Facilities (Cont'd)

2.1.3.6 The Company shall not be responsible for the installation, operation, or maintenance of any Buyer-provided communications equipment, unless approved by the Company. Where such equipment is connected to the facilities furnished pursuant to this Tariff, the responsibility of the Company shall be limited to the furnishing of facilities or Service(s) offered under this Tariff, and to the maintenance and operation of such facilities or Service(s). Subject to this responsibility, the Company shall not be responsible for:

(a) the transmission of signals by Buyer-provided equipment or for the quality of, or defects in, such transmission;

(b) the reception of signals by Buyer-provided Equipment.

2.1.4 Services, Equipment, or Facilities

2.1.4.1 The Company reserves the right to limit or allocate the use of existing facilities, or of additional facilities offered, when necessary due to a lack of facilities or some other cause beyond the Company's control.

2.1.4.2 The Company may, where such action is reasonably required in the operation of its business, substitute, change or rearrange any facilities used in providing Service(s) under this Tariff. The Company shall not be responsible if any such substitution, change or rearrangement renders any Buyer-provided equipment, facilities, or Service(s) obsolete or requires modification or alteration thereof or otherwise affects the operating characteristics of the equipment, facility or service. The Company will provide reasonable notification of any such change in facilities described above to the Buyer in writing where reasonably possible. The Company will work cooperatively with the Buyer and provide reasonable time for any redesign and implementation required by the change in operating characteristics.

Josh Nelson
Great Lakes Communication Corp.
1713 McNaughton Way
Spencer, IA 51301

2. GENERAL REGULATIONS (Cont'd)

2.1 Undertaking of the Company (Cont'd)

2.1.4 Services, Equipment, or Facilities (Cont'd)

2.1.4.3 The Company shall use reasonable efforts to maintain only the facilities and equipment that it furnishes to the Buyer. The Buyer may not, nor may the Buyer permit others, to rearrange, disconnect, remove, attempt to repair, or otherwise interfere with any of the facilities or equipment installed by the Company, except upon the written consent of the Company.

2.1.4.4 The Company shall not be responsible for the installation, operation, or maintenance of any Buyer-provided equipment, unless otherwise agreed to upon terms mutually acceptable to both the Company and the Buyer and evidenced by a signed written document. Where such equipment is connected to the facilities furnished under this Tariff, the responsibility of the Company shall be limited to the furnishing of Services and associated facilities and equipment offered under this Tariff and to the maintenance and operation of such Services. Subject to this responsibility, the Company shall not be responsible for:

(a) the transmission of signals by Buyer-provided equipment or for the quality of, or defects in, such transmission; or

(b) the reception of signals by Buyer-provided equipment; or

(c) network control signaling where such signaling is performed by Buyer-provided network control signaling equipment.

2.1.5 Notification of Service-Affecting Activities

2.1.5.1 The Company will provide the Buyer reasonable notification of Service-affecting activities that may occur in normal operation of its business. Such activities may include, but are not limited to, equipment or facilities additions, removals or rearrangements, and routine preventive maintenance. No specific advance notice period is applicable to all Service activities. The Company will work cooperatively with the Buyer to determine the reasonable notification requirements. With some emergency or unplanned Service-affecting conditions, such as an outage resulting from cable damage, notification to the Buyer might not be possible.

Josh Nelson
Great Lakes Communication Corp.
1713 McNaughton Way
Spencer, IA 51301

2. GENERAL REGULATIONS (Cont'd)

2.2 Obligations of the Buyer

2.2.1 General Obligations

2.2.1.1 The Buyer will ensure that the characteristics and methods of operation of any circuits, facilities or equipment not provided by the Company and associated with the facilities utilized to provide Service(s) under this Tariff shall not interfere with or impair Service over facilities of the Company; cause damage to their plant; impair privacy or create hazards to employees or the public.

2.2.1.2 The Service provided under this Tariff must not be used for an unlawful purpose or used in an abusive manner which would reasonably be expected to frighten, abuse, torment or harass another or interfere with use of Service by one or more other Buyers.

2.2.1.3 The Buyer is responsible for damage to or loss of the Company's facilities or equipment caused by acts or omissions of the Buyer; or noncompliance by the Buyer; or by fire or theft or other casualty at the Buyer's location, unless caused by the negligence or willful misconduct of the Company's employees or agents.

2.2.1.4 The Buyer will provide at no charge, as specified from time to time by the Company, any needed personnel, equipment, space, and power to operate Company facilities and equipment that may be installed at the Buyer's location, and the level of heating and air conditioning necessary to maintain proper operating environment at such location.

2.2.1.5 Where applicable, the Buyer will obtain, maintain, and otherwise have full responsibility for all permissions, approvals, consents, licenses, permits, and rights-of-way and conduit necessary for installation of cables and associated equipment used to provide services to the Buyer from the building service entrance or property line to the location of the equipment space. Any costs associated with obtaining and maintaining the permissions, approvals, consents, licenses, permits, and rights-of-way described herein, including the costs of altering the structure to permit installation of the Company-provided facilities, shall be borne entirely by, or may be charged by the Company, to, the Buyer.

Josh Nelson
Great Lakes Communication Corp.
1713 McNaughton Way
Spencer, IA 51301

2. GENERAL REGULATIONS (Cont'd)

2.2 Obligations of the Buyer (Cont'd)

2.2.1 General Obligations (Cont'd)

2.2.1.6 The Buyer will provide a safe place to work and will comply with all laws and regulations regarding the working conditions at the location at which the Company employees and agents shall be installing or maintaining the Company's facilities and equipment. The Buyer may be required to install and maintain Company facilities and equipment within a hazardous area if, in the Company's opinion, injury or damage to the Company's employees or property might result from installation or maintenance by the Company. The Buyer shall be responsible for identifying, monitoring, removing, and disposing of any hazardous material (e.g., friable asbestos) prior to any construction or installation work.

2.2.1.7 The Company will comply with all laws and regulations applicable to, and will obtain all permissions, approvals, consents, licenses, and permits as may be required with respect to the location of Company facilities and equipment at any Buyer location or the rights-of-way for which Buyer is responsible, and will grant or obtain permission for Company agents or employees to enter such location of the Buyer at any time for the purpose of installing, inspecting, maintaining, testing, repairing, or upon termination of service as stated herein, removing the facilities or equipment of the Company.

2.2.1.8 The Buyer must not create or allow to be placed, any liens or other encumbrances on the Company's equipment or facilities.

2.2.1.9 Buyers must use the Service provided by the Company in a manner, and at all times, consistent with the Tariff obligations identified herein and shall not utilize the Company's Service(s) in any manner that:

(a) Interferes with or impairs the Services(s) of the Company, other carriers, or other Buyers;

(b) Causes damage to Company-provided facilities;

(c) Interferes with the privacy of communications;

Josh Nelson
Great Lakes Communication Corp.
1713 McNaughton Way
Spencer, IA 51301

2. GENERAL REGULATIONS (Cont'd)

2.2 Obligations of the Buyer (Cont'd)

2.2.1 General Obligations (Cont'd)

(d) Creates a hazard to the Company's employees, contractors, or agents or the public; or

(e) Interferes, frightens, abuses, torments, harasses any person or entity or unreasonably interferes with the use of the Company's Service by others.

2.2.1.10 The Buyer shall be fully liable for payment of all applicable rates, charges and fees for any Service provided by the Company, if that Service is received by the Buyer. Buyer is liable for payment of all calls that originate on its network, including actual calls made by Buyer, Buyer's End Users, or unauthorized third parties (*e.g.*, fraudulent calls).

2.2.1.11 The Buyer shall reimburse the Company for damages to Company facilities utilized to provide services under this Tariff caused by the negligence or willful act of the Buyer, or resulting from improper use of the Company facilities, or due to malfunction of any facilities or equipment provided for or by the Buyer. Nothing in the foregoing provision shall be interpreted to hold one Buyer liable for another Buyer's actions. The Company will, upon reimbursement for damages, cooperate with the Buyer in prosecuting a claim against the person causing such damage, and the Buyer shall be subrogated to the right of recovery by the Company for the damages to the extent of such payment.

2.2.1.12 The Buyer shall be responsible for the payment of technician charges as set forth herein for visits by the Company's employees, contractors, or agents to the Buyer's location when a Service difficulty or trouble report results from the use of equipment or facilities provided by any party other than the Company, including but not limited to the Buyer.

Josh Nelson
Great Lakes Communication Corp.
1713 McNaughton Way
Spencer, IA 51301

2. GENERAL REGULATIONS (Cont'd)

2.2 Obligations of the Buyer (Cont'd)

2.2.2 Claims

With respect to any Service, facility, or equipment provided by the Company, Buyer shall indemnify, defend, and hold harmless the Company from and against all claims, actions, damages, liabilities, costs, and expenses for:

2.2.2.1 any loss, destruction, or damage to property of the Company or any third party, or the death or injury to persons, including, but not limited to, employees, or invitees of either party, arising out of any act or omission of the Buyer, its employees, agents, representatives, or invitees in the course of using the Services, facilities, or equipment provided under this Tariff; or

2.2.2.2 any claim, loss, damage, expense, or liability for infringement of any copyright, patent, trade secret, or any proprietary or intellectual property right of any third party, arising from any act or omission by the Buyer, including, without limitation, use of the Company's Service(s) and facilities in a manner not contemplated by the agreement between Buyer and Company.

2.2.3 Buyer Equipment and Channels

2.2.3.1 General

(a) A Buyer may transmit or receive information or signals via the facilities of the Company. The Company's Services are designed primarily, but not exclusively, for the transmission of voice grade telephonic signals, except as otherwise stated in this Tariff. The Company does not guarantee that its Service(s) will be suitable for any particular purposes other than as specifically and expressly stated in this Tariff.

2.2.3.2 Company Equipment

(a) If any Company equipment is installed at the Buyer location, the Buyer is required to maintain such equipment in good working order at the expense of the Buyer. The Buyer shall provide electric power to such equipment at its own expense, unless otherwise agreed to by the Company in writing.

Josh Nelson
Great Lakes Communication Corp.
1713 McNaughton Way
Spencer, IA 51301

2. GENERAL REGULATIONS (Cont'd)

2.2 Obligations of the Buyer (Cont'd)

2.2.3 Buyer Equipment and Channels (Cont'd)

2.2.3.2 Company Equipment (Cont'd)

(b) The Buyer is responsible for ensuring that Buyer-provided equipment connected to Company equipment and facilities is compatible with such equipment and facilities. The magnitude and character of the voltages and currents impressed on Company-provided equipment and wiring by the connection, operation, or maintenance of such equipment and wiring shall be such as not to cause damage to the Company-provided equipment and wiring or injury to the Company's employees or to other persons. Any additional protective equipment required to prevent such damage or injury shall be provided by the Company at the Buyer's expense.

2.2.3.3 Interconnection of Facilities

(a) Service furnished by the Company may be interconnected with services or facilities of other authorized communications common carriers and with private systems, subject to technical limitations established from time to time by the Company. Service furnished by the Company is not part of a joint undertaking with such other common carriers or systems. Any special interface equipment necessary to achieve compatibility between the facilities and equipment of the Company used for furnishing Services and the channels, facilities, or equipment of others shall be provided at the Buyer's expense.

Josh Nelson
Great Lakes Communication Corp.
1713 McNaughton Way
Spencer, IA 51301

2. GENERAL REGULATIONS (Cont'd)

2.2 Obligations of the Buyer (Cont'd)

2.2.3 Buyer Equipment and Channels (Cont'd)

2.2.3.3 Interconnection of Facilities (Cont'd)

(b) If harm to the Company's network, personnel or services is imminent or is occurring due to interconnection with another carrier's services or use of unauthorized or malfunctioning Buyer equipment, the Company reserves the right to terminate Buyer's service immediately, with no prior notice required.

(c) Upon request and in the sole discretion of Company, facilities furnished under this Tariff may be connected to Buyer-provided equipment. All such equipment shall be registered by the FCC pursuant to Part 68 of Title 47, Code of Federal Regulations; and all Buyer-provided wiring shall be installed and maintained in compliance with those regulations.

(d) The Buyer is responsible for taking all necessary legal steps for interconnecting Buyer-provided equipment or systems with Company's facilities. Buyer shall secure all licenses, permits, approvals, authorizations, consent, permissions, rights-of-way, and other arrangements necessary for such interconnection.

(e) Unless otherwise agreed by the Company, the Buyer shall ensure that the facilities or equipment provided by another carrier are properly interconnected with the facilities or equipment of the Company. The Company may require the use of protective equipment at the Buyer's expense.

Josh Nelson
Great Lakes Communication Corp.
1713 McNaughton Way
Spencer, IA 51301

2. GENERAL REGULATIONS (Cont'd)

2.2 Obligations of the Buyer (Cont'd)

2.2.3 Buyer Equipment and Channels (Cont'd)

2.2.3.4 Inspections

(a) Upon notification to the Buyer, and at a reasonable time, the Company may make such tests and inspections as may be necessary to determine that the Buyer is complying with the requirements set forth in this Section.

(b) If protective requirements for Buyer-provided equipment are not being complied with, the Company may take such action as it deems necessary to protect its facilities, equipment, and personnel. The Company will notify the Buyer promptly if there is any need for further corrective action. Within five days of receiving this notice, the Buyer must take this corrective action and notify the Company of the action taken. If the Buyer fails to do this, the Company may take whatever additional action is deemed necessary, including the suspension or termination of service, to protect its facilities, equipment and personnel from harm.

2.2.3.5 Prohibited Uses

(a) The Service(s) that the Company offers shall not be used for any unlawful purpose or for any use as to which the Buyer has not obtained all required governmental and other third-party approvals, authorization, licenses, consents, and/or permits.

(b) The Company may require applicants for Service who intend to use the Company's offerings for resale and/or shared use to file a letter with the Company confirming that their use of the Company's offerings complies with relevant laws, and FCC regulations, policies, guidelines, orders and decisions.

(c) The Company may require a Buyer to immediately stop its transmission of signals if said transmission is believed to be causing interference to others.

Josh Nelson
Great Lakes Communication Corp.
1713 McNaughton Way
Spencer, IA 51301

3. PAYMENT AND BILLING

3.1 Payment Arrangements

3.1.1 Payment for Service

The Company will endeavor to bill on a current basis all charges incurred by and credits due to the Buyer under this Tariff attributable to Service(s) established or discontinued during the preceding billing period, as described in Section 3.1.2.

The Buyer is responsible for the payment of all charges for Service(s) furnished by the Company. All bills are due 31 days after the bill date (payment date) or by the next bill date, whichever is the shortest interval, and are payable in immediately available funds. If such payment date would cause payment to become due on a Saturday, Sunday, or holiday (as recognized by the federal government or applicable state government), such payment shall be due on the next business day.

3.1.1.1 The Buyer is responsible for payment of appropriate sales, use, gross receipts, excise, access or other local, state and federal taxes, charges or surcharges (however designated) (excluding taxes on the Company's net income) imposed or based upon the provision, sale or use of the Company's Service(s), unless otherwise agreed to in writing, pursuant to an ICB contract, the terms of which are available to similarly situated Buyers.

3.1.1.2 Without limitation to the foregoing, the Buyer is responsible for any and all cost(s) incurred as the result of:

(a) any delegation of authority resulting in the use of Buyer's communications equipment and/or network services which result in the placement of Calls via the Company;

(b) any and all use of Company Services, including Calls which the Buyer did not individually authorize, including any and all fraudulent or allegedly fraudulent calls that originate on the Buyer's network;

(c) any Calls placed by or through the Buyer's equipment via any remote access feature(s);

(d) any use of the Company's Services and/or activities, whether or not accompanied by a written order.

Josh Nelson
Great Lakes Communication Corp.
1713 McNaughton Way
Spencer, IA 51301

3. PAYMENT AND BILLING (Cont'd)

3.1 Payment Arrangements (Cont'd)

3.1.2 Billing and Collection of Charges

3.1.2.1 The Company will endeavor to bill usage charges monthly for the preceding billing period; however, the Company's failure to do so shall not affect the Buyer's liability for such charges irrespective of the length of delay between the date of usage and the Company's billing for such usage. Company is permitted to bill for usage within eighteen (18) months of the date upon which service was provided, assuming that the Buyer was aware of the unbilled Services during the period the Services were unbilled.

3.1.2.2 Each bill will include industry standard descriptions of Service(s) rendered for the period covered, any known unbilled non-usage sensitive charges for prior periods and unbilled usage charges for any prior period.

(a) Buyer's billing will begin upon delivery of Calls to, or receipt of Calls from the Company. Billing accrues through and includes the day that the service, circuit, arrangement or component is discontinued and ceases to be used by Buyer.

3.1.2.3 A Nonrecurring Charge is due and payable within 31 days after the invoice date.

3.1.2.4 Charges based on measured usage will be included on the next invoice rendered following the end of the month in which the usage occurs.

3.1.2.5 When non-usage based Service does not begin on the first day of the month, or end on the last day of the month, the charge for the fraction of the month in which Service was furnished will be calculated on a pro-rated basis with every month considered to have 30 days.

3.1.2.6 If any portion of the Buyer's payment is received by the Company after the date due, or if any portion of the payment is received by the Company in funds which are not immediately available, then a Late Payment Fee shall be due to the Company. The Late Payment Fee shall be calculated at 1.5% of the unpaid balance per month or portion thereof for the period from the due date until the payment is received.

Josh Nelson
Great Lakes Communication Corp.
1713 McNaughton Way
Spencer, IA 51301

3. PAYMENT AND BILLING (Cont'd)

3.1 Payment Arrangements (Cont'd)

3.1.2 Billing and Collection of Charges (Cont'd)

3.1.2.7 In addition to other penalties or fees, the Buyer will be assessed a charge of twenty-five dollars ($25) for each check submitted by the Buyer to the Company which a financial institution refuses to honor for insufficient funds or a non-existent account.

3.1.2.8 If Service is discontinued by the Company in accordance with Section 3.1.6 following, and later restored, restoration of Service will be subject to all applicable reconnection or reestablishment charges.

3.1.3 Advance Payments

To safeguard its interests, the Company may require a Buyer to make an Advance Payment before Services are furnished. The Advance Payment will not exceed an amount equal to the Nonrecurring Charge(s) and one month's charges for the Service. The Advance Payment will be credited to the Buyer's initial bill. An Advance Payment may be required in addition to a deposit.

3.1.4 Jurisdictional Reporting Requirements

3.1.4.1 To determine the jurisdiction of a call, the Company compares the originating number information with the terminating number information. Traffic without sufficient call detail shall be that traffic for which the originating number information lacks a valid Charge Party Number or Calling Party Number.

3.1.4.2 The Buyer must indicate a projected Percent of Interstate Use (PIU) factor in a whole number (i.e., a number 0 - 100) when ordering Switched Access Service. When terminating call details are insufficient to determine the jurisdiction for the call, the Buyer may supply the projected PIU factor. The projected PIU factor will be used to apportion the terminating call minutes for which call details were insufficient to determine jurisdiction between the interstate and intrastate jurisdictions.

Josh Nelson
Great Lakes Communication Corp.
1713 McNaughton Way
Spencer, IA 51301

3. PAYMENT AND BILLING (Cont'd)

3.1 Payment Arrangements (Cont'd)

3.1.4 Jurisdictional Reporting Requirements (Cont'd)

3.1.4.3 When terminating call details are insufficient to determine the jurisdiction, and the Buyer does not supply a projected PIU factor, calls will be billed using a PIU of 50 (50% interstate – 50% intrastate).

3.1.4.4 The Buyer may update the PIU factor on a quarterly basis. The Buyer shall forward to the Company a revised report, to be received no later than fourteen (14) days after the first of January, April, July and October. The revised report shall show the PIU factor for the most current data available, for each service arranged for interstate use. This data shall consist of at least three (3) and no more than twelve (12) consecutive months' of data, ending no more than seventy-five (75) days earlier than the date the report is due (e.g., for the report due January 15th, the last month of data should be no earlier than October 31st). The updated PIU factor shall be based on call detail records. The PIU factor can be based on a statistically valid sample. The PIU factor reported in January, April, July and October will be effective on the bill date of each such month and will serve as the basis for subsequent monthly billing pending the receipt of a revised PIU report.

(a) No prorating or back billing will be done based on the jurisdictional report. However, usage will be billed utilizing the interstate percentage that was in effect at the time the usage was generated.

(b) The Buyer shall maintain and retain the work papers that show how the interstate percentage was determined and a summary derived from the actual call detail records for a minimum twelve (12) month period which statistically substantiates each interstate percentage provided to the Company. This summary at a minimum shall include month, year, state, traffic type (e.g., originating, terminating, 8XX, etc.) and service type. The Company may request the work papers and summary in support of the Buyer's projected PIU factor.

Josh Nelson
Great Lakes Communication Corp.
1713 McNaughton Way
Spencer, IA 51301

3. PAYMENT AND BILLING (Cont'd)

3.1 Payment Arrangements (Cont'd)

3.1.4 Jurisdictional Reporting Requirements (Cont'd)

3.1.4.5 If a billing dispute arises concerning the projected interstate percentage, the Company will ask the Buyer to provide the data the Buyer uses to determine the projected PIU by sending a letter to the Buyer (by certified U.S. Mail, return receipt requested) requesting that the Buyer contact the Company to discuss and explain their report within thirty (30) days of the Company's request. If no response is received from the Buyer, the Company will send a letter to the Buyer (by certified U.S. Mail, return receipt requested) requesting the work papers and any support dating used by the Buyer to substantiate the most recent interstate percentage. The requested information must be submitted by the Buyer to the Company within thirty (30) days after receipt of the certified letter.

(a) If the Buyer submits the work papers and summary as requested, the Company will review this information within thirty (30) days after receipt of the Buyer's information.

(1) If after review of the documentation, the Company and the Buyer establish a revised interstate percentage, the Company will begin using that percentage with the next billing period.

(2) If the Company and the Buyer do not establish a revised interstate percentage, the Company will begin the procedures as set forth below to conduct an audit.

(b) If no response is received from the Buyer, the Company will begin the auditing procedures as set forth below.

Josh Nelson
Great Lakes Communication Corp.
1713 McNaughton Way
Spencer, IA 51301

3. PAYMENT AND BILLING (Cont'd)

3.1 Payment Arrangements (Cont'd)

3.1.4 Jurisdictional Reporting Requirements (Cont'd)

3.1.4.6 When jurisdictional reports are not provided by the Buyer or a billing dispute arises, the Company may request an audit. The audit procedures and responsible party(ies) for payment of audit expenses will be determined as follows:

- If the Company and the Buyer mutually agree upon an independent auditing firm and the party(ies) agree to equally share in the payment of audit expenses, both the Company and the Buyer will be bound by such agreement; or
- The Buyer may select an independent auditing firm and pay all audit expenses.
- If the audit is not conducted as set forth preceding, the Company may select an independent auditing firm and pay all expenses.

3.1.4.7 The Company will adjust the Buyer's PIU based upon the audit results. The PIU resulting from the audit shall be applied to the usage for the quarter the audit is completed, the usage for the quarter prior to completion of the audit and the usage for the two (2) quarters following the completion of the audit. After that time, the Buyer may report a revised PIU. The Company will implement the revised interstate percentage to the next billing period or quarterly report date, whichever is first.

Josh Nelson
Great Lakes Communication Corp.
1713 McNaughton Way
Spencer, IA 51301

3. PAYMENT AND BILLING (Cont'd)

3.1 Payment Arrangements (Cont'd)

3.1.4 Jurisdictional Reporting Requirements (Cont'd)

3.1.4.8 Identification and Rating of VoIP-PSTN Traffic

VoIP-PSTN Traffic is defined as traffic exchanged between a Company End User and the Buyer in Time Division Multiplexing (TDM) format that originates and/or terminates in Internet Protocol (IP) format. This section governs the identification of VoIP-PSTN Traffic that is required to be compensated at interstate access rates unless the parties have agreed otherwise by the F.C.C. in its Report and Order in WC Dockets Nos. 10-90, etc., F.C.C. Release No. 11-161 (November 18, 2011) (F.C.C. Order). Specifically, this section establishes the method of separating VoIP-PSTN Traffic from the Buyer's traditional intrastate access traffic, so that VoIP-PSTN Traffic can be billed in accordance with the F.C.C. Order.

VoIP-PSTN Traffic identified in accordance with this tariff section will be billed at rates equal to the Company's applicable tariffed interstate switched access rates as set forth in Section 7, following.

1. Calculation and Application of Percent-VoIP- Usage Factors

(a) The Company will determine the number of VoIP-PSTN Traffic minutes of use (MOU) to which interstate rates will be applied under B, preceding, by applying an originating Percent VoIP Usage (PVU) factor to the total intrastate access MOU originated by a Company end user and delivered to the Buyer and by applying a terminating PVU factor to the total intrastate access MOU terminated by a Buyer to the Company's end user.

(b) The Buyer will calculate and furnish to the Company an originating PVU factor representing the whole number percentage of the Buyer's total originating intrastate access MOU that the Buyer exchanges with the Company in the LATA that is received from the Company and that is terminated in IP format and that would be billed by the Company as intrastate access MOU.

(c) The Buyer will calculate and furnish to the Company a terminating PVU factor representing the whole number percentage of the Buyer's total terminating intrastate access MOU that the Buyer exchanges with the Company in the LATA that is sent to Company and which originated in IP format and that would be billed by the Company as intrastate access MOU.

Josh Nelson
Great Lakes Communication Corp.
1713 McNaughton Way
Spencer, IA 51301

3. PAYMENT AND BILLING (Cont'd)

3.1 Payment Arrangements (Cont'd)

3.1.4 Jurisdictional Reporting Requirements (Cont'd)

3.1.4.8 Identification and Rating of VoIP-PSTN Traffic (Cont'd)

1. Calculation and Application of Percent-VoIP-Usage Factors (Cont'd)

(d) The Buyer shall not modify their reported PIU factor to account for VoIP-PSTN Traffic.

(e) Both the Buyer provided originating PVU and the terminating PVU shall be based on information such as the number of the Buyer's retail VoIP subscriptions in the state (e.g. as reported on F.C.C. Form 477), traffic studies, actual call detail or other relevant and verifiable information which will be provided to the Company upon request.

(f) The Buyer shall retain the call detail, work papers, and information used to develop the PVU factors for a minimum of one year.

(g) If the Buyer does not furnish the Company with a PVU factor, the Company will utilize a PVU equal to zero.

2. Initial Implementation of PVU Factors

(a) If the PVU factors cannot be implemented in the Company's billing systems by December 29, 2011, once the factors can be implemented the Company will adjust the Buyer's bills to reflect the PVU factors prospectively in the next bill period if the PVU factors are provided by the Buyer to the Company prior to April 15, 2012.

(b) The Company may choose to provide credits based on the reported PVU factors on a quarterly basis until such time as the billing system modifications can be implemented.

Josh Nelson
Great Lakes Communication Corp.
1713 McNaughton Way
Spencer, IA 51301

3. PAYMENT AND BILLING (Cont'd)

3.1 Payment Arrangements (Cont'd)

3.1.4 Jurisdictional Reporting Requirements (Cont'd)

3.1.4.8 Identification and Rating of VoIP-PSTN Traffic (Cont'd)

3. PVU Factor Updates

The Buyer may update the PVU factors quarterly using the method set forth in 1.c, preceding. If the Buyer chooses to submit such updates, it shall forward to the Company, no later than 15 days after the first day of January, April, July and/or October of each year, revised PVU factors based on data for the prior three months, ending the last day of December, March, June and September, respectively. The revised PVU factors will serve as the basis for future billing and will be effective on the bill date of each such month and shall serve as the basis for subsequent monthly billing until superseded by new PVU factors. No prorating or back billing will be done based on the updated PVU factors.

4. PVU Factor Verification

(a) Not more than twice in any year, the Company may request from the Buyer an overview of the process used to determine the PVU factors, the call detail records, description of the method for determining how the end user originates and terminates calls in IP format, and other information used to determine the Buyer's PVU factors furnished to the Company in order to validate the PVU factors supplied. The Buyer shall comply, and shall reasonably supply the requested data and information within 15 days of the Company's request.

(b) The Company may dispute the Buyer's PVU factor based upon:

- A review of the requested data and information provided by the Buyer,
- The Company's reasonable review of other market information, F.C.C. reports on VoIP lines, such as F.C.C. Form 477 or state level results based on the F.C.C. Local Competition Report or other relevant data.
- A change in the reported PVU factor by more than five percentage points from the preceding quarter.

Josh Nelson
Great Lakes Communication Corp.
1713 McNaughton Way
Spencer, IA 51301

3. PAYMENT AND BILLING (Cont'd)

3.1 Payment Arrangements (Cont'd)

3.1.4 Jurisdictional Reporting Requirements (Cont'd)

3.1.4.8 Identification and Rating of VoIP-PSTN Traffic (Cont'd)

4. PVU Factor Verification

c. If after review of the data and information, the Buyer and the Company establishes revised PVU factors, the Company will begin using those revised PVU factors with the next bill period.

d. If the dispute is unresolved, the Company may initiate an audit. The Company shall limit audits of the Buyer's PVU factor to no more than twice per year. The Buyer may request that the audit be conducted by an independent auditor. In such cases the associated auditing expenses will be paid by the Buyer.

- In the event that the Buyer fails to provide adequate records to enable the Company or an independent auditor to conduct an audit verifying the Buyer's PVU factors, the Company will bill the usage for all contested periods using the most recent undisputed PVU factors reported by the Buyer. These PVU factors will remain in effect until the audit can be completed.

- During the audit, the most recent undisputed PVU factors from the previous reporting period will be used by the Company.

- The Company will adjust the Buyer's PVU factors based on the results of the audit and implement the revised PVU in the next billing period or quarterly report date, whichever is first. The revised PVU factors will apply for the next two quarters before new factors can be submitted by the Buyer.

- If the audit supports the Buyer's PVU factors, the usage for the contested periods will be adjusted to reflect the Buyer's audited PVU factors.

Josh Nelson
Great Lakes Communication Corp.
1713 McNaughton Way
Spencer, IA 51301

3. PAYMENT AND BILLING (Cont'd)

3.1 Payment Arrangements (Cont'd)

3.1.5 Deposits

3.1.5.1 To safeguard its interests, the Company may require a Buyer to make a deposit to be held as a guarantee for the payment of charges. A deposit will be required under the following conditions:

(a) Buyer has had no previous Access Service; or

(b) Buyer does not have verifiable credit the Company; or

(c) Buyer has had previous verifiable Access Service with the Company but has an outstanding and unpaid bill for Access Service; or has not established satisfactory credit. Satisfactory credit for an Access Service Buyer is defined as twelve consecutive months of service without a suspension of service for nonpayment or with no more than one notification of intent to suspend service for nonpayment.

The deposit will not exceed an amount equal to:

(a) two months' charges for a Service or facility which has a minimum payment period of one month; or

(b) the charges that would apply for the minimum payment period for a Service or facility which has a minimum payment period of more than one month; except that the deposit may include an additional amount in the event that a termination charge is applicable.

Josh Nelson
Great Lakes Communication Corp.
1713 McNaughton Way
Spencer, IA 51301

3. PAYMENT AND BILLING (Cont'd)

3.1 Payment Arrangements (Cont'd)

3.1.5 Deposits (Cont'd)

3.1.5.2 An initial deposit or an additional deposit will be required of an existing Buyer when high risk is indicated and existing security is insufficient. Such requirement will be imposed when payment history includes a suspension of service for nonpayment, or includes more than one notification of intention to suspend service for nonpayment during the previous twelve month period.

(a) Any demand for a deposit from an existing Buyer is due and payable within ten days after the requirement is imposed. This demand shall be in writing. If said deposit or installment thereof, as appropriate, is not paid within the aforementioned time frame, the Company may suspend service of the Buyer without further notice.

(b) When it is determined that a deposit is required under the conditions specified above, the Buyer may, in lieu of or in addition to making the deposit, arrange for an acceptable third party to guarantee payment of his charges by executing on his behalf a Guarantee of Payment Agreement with the Company. An acceptable third party guarantor for Access Service is a current Buyer with at least two years' continuous service, whose payment history for the most recent twelve month period is satisfactory.

3.1.5.3 When a Service is discontinued, the amount of a deposit, if any, will be applied to the Buyer's account and any credit balance remaining will be refunded.

3.1.5.4 Simple Interest shall accrue on a deposit and shall be paid at the time the deposit is either refunded or applied to the Buyer's final bill for service. Simple Interest will be applied for the month or portion of a month from the date the Buyer deposit is received by the Company to and including the date such deposit is credited to the Buyer's account or the date the deposit is refunded by the Company.

3.1.5.5 Such a deposit will be refunded or credited to the Buyer's account after a one-year, prompt-payment record is established.

Josh Nelson
Great Lakes Communication Corp.
1713 McNaughton Way
Spencer, IA 51301

3. PAYMENT AND BILLING (Cont'd)

3.1 Payment Arrangements (Cont'd)

3.1.5 Deposits (Cont'd)

3.1.5.6 In the event the provision of all service to the Buyer is terminated and the Company maintains a cash deposit from the Buyer, the deposit and any accrued, uncredited Simple Interest will be applied to any outstanding sums owed to the Company, and any remaining balance will be returned to the Buyer.

(a) The Buyer will receive Simple Interest for each month or portion thereof that a deposit is held.

3.1.6 Discontinuance of Service

3.1.6.1 Upon nonpayment of any amounts owing to the Company, the Company may by giving ten days' prior written notice to the Buyer, discontinue or suspend Service without incurring any liability.

3.1.6.2 In the Company's sole discretion, upon violation of any of the other material terms or conditions for furnishing Service, the Company may, by giving 10 days' prior notice in writing to the Buyer (or such shorter notice as may be provided elsewhere in this Tariff), discontinue or suspend Service without incurring any liability if such violation continues during the period.

3.1.6.3 Upon condemnation of any material portion of the facilities used by the Company to provide Service to a Buyer or if a casualty renders all or any material portion of such facilities inoperable beyond feasible repair, the Company, by giving notice to the Buyer, may discontinue or suspend Service without incurring any liability.

Josh Nelson
Great Lakes Communication Corp.
1713 McNaughton Way
Spencer, IA 51301

3. PAYMENT AND BILLING (Cont'd)

3.1 Payment Arrangements (Cont'd)

3.1.6 Discontinuance of Service (Cont'd)

3.1.6.4 Upon any governmental prohibition or required alteration of the Service(s) to be provided or any violation of any applicable law or regulation, the Company may immediately discontinue Service without incurring any liability.

3.1.6.5 Upon the Company's discontinuance of Service to the Buyer under the terms of this Tariff, the Company, in addition to all other remedies that may be available to the Company at law or in equity or under any other provision of this tariff, may declare all future monthly and other charges which would have been payable by the Buyer during the remainder of the term for which such Service(s) would have otherwise been provided to the Buyer to be immediately due and payable.

3.1.7 Billing Disputes

3.1.7.1 General

(a) All bills are presumed accurate, and shall be binding on the Buyer unless written notice of a good faith dispute is received by the Company. For the purposes of this Section, "notice of a good faith dispute" is defined as written notice to the Company's contact (which is listed on every page of this Tariff) within a reasonable period of time after the invoice has been issued, containing sufficient documentation to investigate the dispute, including the account number under which the bill has been rendered, the date of the bill, and the specific items on the bill being disputed. A separate letter of dispute must be submitted for each and every individual bill that the Buyer wishes to dispute.

(b) Prior to or at the time of submitting a good faith dispute, Buyer shall tender payment for any undisputed amounts, as well as payment for any disputed charges relating to traffic in which the Buyer transmitted an interstate telecommunications to the Company's network.

Josh Nelson
Great Lakes Communication Corp.
1713 McNaughton Way
Spencer, IA 51301

ACCESS SERVICE

3. PAYMENT AND BILLING (Cont'd)

3.1 Payment Arrangements (Cont'd)

3.1.7 Billing Disputes (Cont'd)

3.1.7.1 General (Cont'd)

(c) If payment of the originally billed amount is not made when due – whether or not a notice of dispute has been submitted – Buyer will incur a Late Payment Fee on the unpaid amount at the rate of 1.5% per month on the total unpaid balance.

(d) The Company will evaluate the Buyer's dispute and notify the Buyer in writing of its determination of whether the dispute has been resolved in favor of or against the Buyer. If the Company does not respond to the Buyer's notice of dispute within 60 days after receiving such notice, the dispute will be deemed rejected. Buyer has the right to pursue any and all legal remedies if dissatisfied with Company's determination.

3.1.7.2 Late Payment Fee

All portions of the bill, whether disputed or undisputed, must be paid by the payment due date to avoid assessment of a Late Payment Fee.

3.1.7.3 Adjustments or Refunds to the Buyer

(a) In the event that the Company resolves the billing dispute in favor of a Buyer who has paid the total amount of the disputed bill as required by this Tariff, the Company will credit the Buyer's account for any overpayment by the Buyer, together with Simple Interest, in the billing period following the resolution of the dispute.

(b) In the event that the Company resolves the billing dispute in favor of a Buyer who has paid the total amount of the disputed bill as required by this Tariff, but canceled the service, the Company will issue a refund of any overpayment by the Buyer, together with Simple Interest.

Josh Nelson
Great Lakes Communication Corp.
1713 McNaughton Way
Spencer, IA 51301

3. PAYMENT AND BILLING (Cont'd)

3.1 Payment Arrangements (Cont'd)

3.1.7 Billing Disputes (Cont'd)

3.1.7.3 Adjustments or Refunds to the Buyer (Cont'd)

(c) All adjustments or refunds provided by the Company to the Buyer at the Buyer's request, or provided by the Company to the Buyer by way of compromise of a billing dispute, and which are accepted by the Buyer, are final and constitute full satisfaction, settlement, and/or compromise of all of the Buyer's claims for the billing period for which the adjustment or refund was issued.

3.1.7.4 Attorneys' Fees

In the event that the Company pursues and prevails on a claim in Court or before any regulatory body arising out of a Buyer's refusal to make payment pursuant to this Tariff, including refusal to pay for services originating or terminating to a Volume End User, Buyer shall be liable for the payment of the Company's reasonable attorneys' fees expended in collecting those unpaid amounts.

3.2 Access Billing

3.2.1 Billing Standards

3.2.1.1 The Company shall produce access bills in general conformance with accepted industry standards.

3.2.1.2 An access bill is comprised of one or more billing elements, including usage sensitive charges, distance sensitive charges, flat-rated charges, individual-case-based (ICB) charges, and Nonrecurring or special miscellaneous charges that may be appropriate.

Josh Nelson
Great Lakes Communication Corp.
1713 McNaughton Way
Spencer, IA 51301

3. PAYMENT AND BILLING (Cont'd)

3.2 Access Billing (Cont'd)

3.2.2 Distance Charges

3.2.2.1 Where charges for an access service are based on distance, the distance between two points is measured as airline distance between the Company's Points of Presence as listed in the National Exchange Carrier Association FCC No. 4, Wire Center Tariff or Local Exchange Routing Guide (LERG) issued by Telcordia.

3.2.2.2 The airline distance between any two Points of Presence is determined as follows:

(a) Obtain the "V" (vertical) and "H" (horizontal coordinates for each POP from the above referenced document(s),

(b) Compute the difference between the "V" coordinates of the two POPs; and the difference between the two "H" coordinates,

Josh Nelson
Great Lakes Communication Corp.
1713 McNaughton Way
Spencer, IA 51301

3. PAYMENT AND BILLING (Cont'd)

3.2 Access Billing (Cont'd)

3.2.2 Distance Charges (Cont'd)

The airline distance between any two Points of Presence is determined as follows: (Cont'd)

(c) Square the difference obtained in (b) above,

(d) Add the square of the "V" difference and the square of the "H" difference obtained in (c) above,

(e) Divide the sum of the squares by 10. Round to the next higher whole number if any fraction is obtained,

(f) Obtain the square root of the whole number result obtained in (e) above. Round to the next higher whole number if any fraction is obtained. This is the airline mileage applicable.

3.2.3 Suspension, Termination or Refusal of Service

3.2.3.1 Service may be suspended or terminated for nonpayment of any bill or deposit until such bill or deposit is paid. If Service is suspended or terminated for nonpayment, the Buyer must remit a connection charge as well as any payment due and any deposit requested by the Company prior to reconnection or reestablishment of Service.

3.2.3.2 When a Buyer refuses to pay bills rendered or deposits requested, the Company may refuse to process existing orders for Service(s) or to accept new orders for Service.

3.2.3.3 The Company reserves the right to suspend, terminate or refuse Service(s) in the event of unauthorized use of Service(s) or facilities received from the Company, where the Buyer is indebted to the Company for previously furnished Service(s) or facilities or where the use of Service(s) or facilities have been abandoned.

Josh Nelson
Great Lakes Communication Corp.
1713 McNaughton Way
Spencer, IA 51301

ACCESS SERVICE

4. CONSTRUCTIVE ORDERING

4.1 General

By receiving from or handing off traffic to the Company's Network, the Buyer will have constructively ordered the Company's Switched Access Service and is responsible for all charges incurred in connection with the use of such Service.

4.1.1 Constructive Ordering

A Constructive Order is initiated when Calls are delivered to or accepted from the Company by a Buyer. By accepting Traffic from the Company or delivering Traffic to the Company's Network, the Buyer agrees that it has ordered, and will pay for, the Company's Services pursuant to this Tariff. Similarly, the selection of an IXC as a PIC constitutes a Constructive Order for Switched Access Service by that IXC.

5. SWITCHED ACCESS SERVICE

5.1 General

Switched Access Service provides for the use of switching and/or transport facilities or services to enable a Buyer to utilize the Company's Network to accept Calls or to deliver Calls. Switched Access Service may be provided via a variety of means and facilities, where available, to be determined by the Company at its sole discretion.

Josh Nelson
Great Lakes Communication Corp.
1713 McNaughton Way
Spencer, IA 51301

5. SWITCHED ACCESS SERVICE (Cont'd)

5.1 General (Cont'd)

5.1.1 Rate Categories and Descriptions

The Company's Interstate Switched Access Service rate elements include the following rate elements or their functional equivalents:

5.1.1.1 Switching:

5.1.1.1 (a) "Tandem Switching" denotes an intermediate switching function between the originating point of a Call and its final destination. This function can be provided by a tandem switch or functionally equivalent equipment.

5.1.1.1 (b) "Local Switching" denotes the switching functionality closest to the calling party or called party, as applicable. This function can be performed by a switch or functionally equivalent equipment. These switching functions are charged on a per-MOU basis, unless otherwise specified by the Company.

5.1.1.1 (c) "Information" services denote functions associated with the provision of directory assistance and call routing. Examples include Information/Intercept Surcharges.

5.1.1.2 Transport: Charges for the transmission of Calls. Transport rate categories consist of two elements: a Transport Termination per path per MOU charge (in some ILEC areas, the rate may be per termination) and a Transport Facility rate per mile per MOU charge.

5.1.1.3 Network Charges: Charges that recover a portion of the costs of connecting the End User to the telephone network. Examples include the Primary Interexchange Carrier Charge and Transport Interconnection Charge.

Josh Nelson
Great Lakes Communication Corp.
1713 McNaughton Way
Spencer, IA 51301

5. SWITCHED ACCESS SERVICE (Cont'd)

5.1 General (Cont'd)

5.1.1 Rate Categories and Descriptions

5.1.1.4 800 Database Access Service: 800 Data Base Access Service is provided with FGD Switched Access Service. When a 1+800 series+NXX-XXXX call is originated by an End User, the Company will utilize the Signaling System 7 (SS7) network to query an 800 data base to perform the identification function. The call will then be routed to the identified End User over FGD switched access. The 800 series includes the following service area codes: 800, 888, 877, 866, 855, 844, 833, and 822.

The manner in which 800 Database Access Service is provided is dependent on the availability of SS7 service at the end office from which the service is provided as outlined following:

When 800 Database Access Service originates at an end office equipped with Service Switching Point (SSP) capability for querying centralized data bases or at a non-SSP equipped end office that can accommodate direct trunking of originating 800 service calls, all such service will be provisioned from that office.

When 800 Database Access Service originates at an end office not equipped with SSP End User identification capability, the 800 services call will be delivered to the access tandem on which the end office is homed for 800 series service and which is equipped with SSP feature to query centralized databases.

When 800 Database Access Service originates at an end office equipped with SSP capability that is not capable of accommodating direct trunking of originating 800 series (other than the 800 service access codes) call will be delivered to the access tandem on which the end office is homed and which is equipped with the SSP feature to query centralized data bases.

Query charges as set forth in following are in addition to those charges applicable for the Feature Group D switched access service.
Charges for this service are provided in Section 7.2.3.

Josh Nelson
Great Lakes Communication Corp.
1713 McNaughton Way
Spencer, IA 51301

5. SWITCHED ACCESS SERVICE (Cont'd)

5.1 General (Cont'd)

5.1.1 Rate Categories and Descriptions (Cont'd)

5.1.1.4 800 Database Access Service (Cont'd)

The Commission has concluded that hoarding, defined as the acquisition of more toll free numbers that one intends to use for the provision of toll free service, as well as the sale of a toll free number by a private entity for a fee, is contrary to the public interest in the conservation of the scarce toll free number resource and contrary to the Commission's responsibility to promote ordinary use and allocation of toll free numbers.

Josh Nelson
Great Lakes Communication Corp.
1713 McNaughton Way
Spencer, IA 51301

5. SWITCHED ACCESS SERVICE (Cont'd)

5.2 Switched Access Service Specifications – Company Requirements

5.2.1 Network Management

The Company maintains the right to apply protective controls in the provision of Switched Access Service. Generally protective controls would be taken as a result of occurrences such as failure or overload of Company or Buyer facilities, natural disasters, mass calling demands, or national security demands.

5.2.2 Transmission Specifications

Each Switched Access Service transmission path is provided with industry standard transmission for its type of service. The Company will work in cooperation with the Buyer to insure that those parameters are met. In the event the established specifications are not maintained, the Company may require immediate corrective action and may work independently or in cooperation with the Buyer to remedy the situation.

5.2.3 Testing

Acceptance Testing and Routine Testing shall be mutually arranged by the Company and the Buyer, as necessary.

5.2.4 Report Requirements

At the Company's request, the Buyer is responsible for providing reports to the Company, if applicable. Such reports include:

(a) Jurisdictional Reports – may be required when Buyer orders Access Service with both intrastate and interstate use so that charges may be apportioned in accordance with those reports. Whether such jurisdictional reports are necessary will be determined at the sole discretion of the Company.

(b) Buyer contact name(s) and telephone number(s) for order confirmation, order provisioning information, order negotiation, interactive engineering design, installation and billing.

Josh Nelson
Great Lakes Communication Corp.
1713 McNaughton Way
Spencer, IA 51301

5. SWITCHED ACCESS SERVICE (Cont'd)

5.3 Rate Regulations

This section contains a brief description and the general regulations governing the rates and charges that apply for Switched Access Service.

5.3.1 Description and Application of Rates

Switched Access Service rates are generally of two types; Recurring Charges and Nonrecurring Charges. Recurring Charges include usage-based rates that are measured and billed on a per-minute of use (MOU) basis. Examples include the per-MOU Switched Access charges that are included in this Tariff. Recurring Charges also include "flat" rates that are charged one time per month, regardless of usage. Nonrecurring Charges are one-time charges that apply for a specific work activity. Examples would include charges for technician charges for maintenance and repair.

5.3.2 Contracts and Individual Case Basis (ICB) Rates

In lieu of the rates terms and/or conditions otherwise set forth in this Tariff, the Company's services may be established and provided at negotiated rates on an Individual Case Basis (ICB), taking into account any factors the Company deems necessary or appropriate, including the nature of the facilities and services involved, the costs of construction and operation, the volume of traffic, the length of service commitment and use of facilities. Such ICB arrangements will be established solely at the Company's discretion. ICB rates, terms, conditions, services, or charges will be made available to similarly situated Buyers on a non-discriminatory basis.

In addition to any rate or charge established by the Company, the Buyer will be responsible for any Recurring or Nonrecurring Charges imposed by local exchange telephone companies incurred by or on behalf of the Buyer in establishing and maintaining service. Such charges may be billed by the Company or directly by the local exchange telephone company, at the Company's option.

5.3.3 Pass-Through of Taxes and Regulatory Fees

The Company may, in its discretion and on a non-discriminatory basis, assess fees and surcharges, including, but not limited to state and federal taxes and regulatory fees.

Josh Nelson
Great Lakes Communication Corp.
1713 McNaughton Way
Spencer, IA 51301

6. MISCELLANEOUS SERVICES

6.1 General

Miscellaneous services may be provided by the Company at the request of a Buyer on an Individual Case Basis if such service arrangements are not offered under other sections of this Tariff and the service is available and within the Company's technical, personnel and capital resources. Charges may include Nonrecurring, Recurring and/or special rates and charges, or combinations thereof.

6.1.1 Presubscription

Presubscription is the process by which an End User may select and designate an IXC for the provision of interstate telephone service. This IXC is referred to as the End User's Presubscribed Interexchange Carrier. If an unauthorized change takes place, the IXC that requested the change will be subject to an Unauthorized PIC Change Charge in addition to the normal PIC Change Charge.

6.1.2 Maintenance of Service

The Buyer shall be responsible for payment of a maintenance of service charge when the Company dispatches personnel to the Buyer's location and trouble is found to be with Buyer facilities or equipment. Such charge will be billed on a time and materials basis, reflecting hourly rates for the Company's technicians, and materials charges established on an ICB.

Josh Nelson
Great Lakes Communication Corp.
1713 McNaughton Way
Spencer, IA 51301

6. MISCELLANEOUS ACCESS SERVICE

6.1 General (Cont'd)

6.1.3 International Blocking Service

Upon request, the Company will provide International Blocking Service at appropriately equipped Company Points of Presence. On each line or trunk for which International Blocking Service is ordered, the Company will block all direct-dialed international Calls that use the call sequence of 011+ or appropriate access code dialing arrangements for international calling. Terms and pricing for such service will be established on an ICB basis.

6.1.4 900 Blocking Service

Upon request, the Company will provide 900 Blocking Service to End Users at appropriately equipped POPs. On each line or trunk for which 900 Blocking Service is ordered, the Company will block all direct dialed Calls placed to a 900 number. Terms and pricing for such service will be established on an ICB basis.

Josh Nelson
Great Lakes Communication Corp.
1713 McNaughton Way
Spencer, IA 51301

6. MISCELLANEOUS ACCESS SERVICE

6.1 General (Cont'd)

6.1.5 Access Order Charge

The Access Order Charge is applied to all Buyer requests for new Switched Access Service. In addition, the Access Order Charge is applicable to Buyer requests for additions, changes or rearrangements to existing Switched Access Service with the following exceptions:

6.1.5.1 The Access Order Charge does not apply:

6.1.5.1.1 To administrative changes as set forth following.
6.1.5.1.2 When a change to a pending order does not result in the cancellation of the pending order and the issuance of a new order.
6.1.5.1.3 When the Interim NXX Translation charge is applicable.
6.1.5.1.4 When a Presubscription Charge is applicable.
6.1.5.1.5 When a Company initiated network reconfiguration requires a Buyer's existing access service to be reconfigured.
6.1.5.1.6 When a service with an ICE rate is converted to a similar service with a non-ICE tariff rate prior to the expiration of the ICB.
6.1.5.1.7 When a Billing Name and Address Order charge is applicable. When a 900 Blocking Service charge is applicable.
6.1.5.1.8 When Payphone Service Providers (PSPs) obtain Coin Supervision Additive Service in conjunction with local exchange service lines for the provision of pay telephone service.

The Access Order Charge will be applied on .a per order basis to each order received by the Company or copy of an order received by the Company except by the Company applying the Interim NXX Translation charge, and is in addition to other applicable charges as set forth in this and other sections of this tariff. The Access Order Charge will be applied on a per order basis for any change, rearrangement or addition to the delivery of signaling to an existing STP Port. The Access Order Charge will be applied on a per order basis for any change, rearrangement or addition of CICs to an existing trunk group.

Josh Nelson
Great Lakes Communication Corp.
1713 McNaughton Way
Spencer, IA 51301

7. RATES AND CHARGES

7.1 General

Rates for Access Service and the other services listed in this Tariff will include usage charges for the rate elements, applicable Recurring Charges, Nonrecurring Charges and miscellaneous charges or combinations of same and are identified herein.

7.2 Switched Access Service

7.2.1 Recurring Rate Elements:

(a) Local Switching, per MOU

(b) Tandem-Switched Transport - Per Mile, per MOU/mile

(c) Tandem-Switched Transport – Fixed, per MOU

(d) Common Transport Multiplexing, per MOU

(e) Carrier Common Line, per MOU

(f) End Office Shared Port, per MOU

(g) Information Surcharge (if applicable)

Josh Nelson
Great Lakes Communication Corp.
1713 McNaughton Way
Spencer, IA 51301

ACCESS SERVICE

7. RATES AND CHARGES (Cont'd)

7.2 Switched Access Service (Cont'd)

7.2.2 Rates for Switched Access Service

Local Switching, per MOU	$0.001974
Tandem-Switched Transport – Per mile, per MOU/mile	$0.000030
Tandem Switched Transport – Fixed, per MOU	$0.000240
Common Transport Multiplexing, per MOU	$0.000036
Carrier Common Line, per MOU	$0.000000
End Office Shared Port, per MOU	$0.000747

7.2.3 800 Database Access Service

Per query	$0.004053

Josh Nelson
Great Lakes Communication Corp.
1713 McNaughton Way
Spencer, IA 51301

ACCESS SERVICE

7. RATES AND CHARGES (Cont'd)

7.3 Other Services

7.3.1 Technician Hourly Rates

(a) Rate per hour/per technician: $75.00 per hour or portion of an hour.

7.3.2 Unauthorized PIC Change Charge

(a) $500.00 per unauthorized PIC change request submitted by IXC.

7.3.3 Access Order Charge

Per Order $130.00

Josh Nelson
Great Lakes Communication Corp.
1713 McNaughton Way
Spencer, IA 51301