CPS ENERGY

POLE ATTACHMENT STANDARDS

Version 2.0

Issued Date: November 30, 2016

Effective Date: January 1, 2017

Stakeholders, Management Approval and Document Control

Internal Stakeholders

Brian D. Bartos, PE	11/30/2016
Manager, Pole Attachment Services	Date
Joseph (Mike) Denning, PE	11/30/2016
Manager, Utility Coordination	Date
Adam R. Marin, PE	11/30/2016
Manager, Overhead Engineering	Date

Management Approval

George J. Tamez, PE	11/30/2016
Director, Distribution Engineering	Date
Richard G. Medina, PE	11/30/2016
Senior Director, T&D Engineering & Planning	Date
Gabriel Garcia	11/30/2016
Director, Senior Counsel	Date

Final Approval

Paul S. Barham	11/30/2016
Senior Vice-President, Delivery Engineering, Integrated Planning, Substation & Transmission	Date

Document Control

CPS Energy Pole Attachment Standards – Version 2.0
Document Title/Version

11/30/2016
Date of Issue

01/01/2017
Effective Date

Revision History

Effective Date	Version Number	Individual Making Edits	Reason/Comments
08/01/2016	1.0	Brian D. Bartos	Initial Release
01/01/2017	2.0	Brian D. Bartos	Addition of provisions to incorporate Wireless Installations, revise One-Touch notification, clarify language and errata corrections to Version 1.0.

CPS Energy
Pole Attachment Standards

Table of Contents

Section ***Page***

I. Statement of Purpose **1**

II. General Administrative Provisions **4**

A. Definitions **4**

B. Registration of Entity **23**

1. Initial Registration Information *23*

2. Updates to Registration Information *23*

C. Execution of Pole Attachment Agreement **24**

1. Separate Agreements Required for Wired Attachments and Wireless Installations *24*

2. Standards Applicable Regardless of Effective Agreement *25*

D. Specify Type of Attachments **25**

E. Termination of Permit **26**

1. Automatic Termination of Permit *26*

2. Surrender of Permit *26*

F. Reporting Requirements **26**

1. List of Installations *26*

2. List of Non-Functional Attachments *27*

3. Removed Equipment *27*

4. Emergency Contact *27*

5. Failure to Report *27*

6. Right to Audit *28*

Section ***Page***

G. Notices **28**
1. Notice of Revisions to the Pole Attachment Standards *28*
2. Process to Request Revisions to the Standards *29*

H. Scope of Standards **30**
1. Grant of Permit *30*
2. Parties Duties and Obligations Under Standards *30*
3. Permit Issuance Conditions *30*
4. No Interest in Property *30*
5. Non-Exclusivity *30*
6. CPS Energy's Rights over Poles *31*
7. Restoration of CPS Energy Service *31*
8. Permitted Uses *31*
9. Expansion of Capacity *32*
10. Reserved Capacity *32*
11. Authorization for Use of One-Touch Transfer Process *33*

I. Fees and Charges **34**
1. General *34*
2. Application Fee & Make-Ready Engineering Review *36*
3. Advance Payment for Make-Ready Electrical Construction *37*
4. Annual Attachment Connection Fee *38*
5. Annual Wireless Installation Fee *38*
6. Unauthorized Charge *39*
7. Other *40*

J. Claims **40**
1. Claims for Damage to CPS Energy Facilities *40*
2. Upon Receipt of Claim *40*
3. Dispute of Claim *41*
4. Payment of Claims *42*
5. Failure to Pay Claims *42*

K. Compliance with Pole Attachment Standards & CPS Energy Enforcement **42**
1. Expectation of Compliance *42*
2. Enforcement of Standards *43*
3. Safety Violation & Safety Violation Assessment *43*
4. Failure to Enforce *45*

Section ***Page***

L. Conflict Resolution 45
1. Informal Conflict Resolution 45
2. Formal Process 46

M. Liability Insurance and Indemnification 47

N. Indemnification 47

O. Performance Bond 47

III. General Technical Provisions 48

A. General Design & Construction Standards & Specifications 48
1. Professional Engineer 48
2. Contractors 48
3. Right to Review 49
4. Installation/Maintenance of Communication Facilities 49
5. Conflicts Within the Standards 50
6. Request Waiver 50
7. Tagging 51
8. Physical Interference with CPS Energy Facilities 52
9. Performance Interference to Attaching Entity's Customer 53
10. Wireless Interference 53
11. Enclosures 56
12. Vegetation Management 56
13. Removal of Attaching Entity's Facilities 57
14. Pre-Certification of Wireless Systems 58

B. Pole Modification and/or Replacements 59
1. Restrictions on Certain Poles 59
2. CPS Energy Not Required to Relocate 61
3. Guying 61
4. Aesthetic of Civic Projects 62
5. Underground Relocation 63
6. Customer Requested Underground Relocations 64
7. Abandonment or Removal of CPS Energy Facilities 65
8. Allocation of Costs 66

Section ***Page***

C. Overlashing **67**
1. Application Required *67*
2. Overlashing Third-Party Facilities *67*
3. Annual Connection Fee *67*

D. Inspection and Inventory of Attaching Entity's Facilities **68**
1. Inspections *68*
2. Routine Visual Inspections and/or Inventory *69*
3. Formal Inventory Performed by CPS Energy or Third Party Contractor Subject to Competitive Bid *69*
4. No Liability *71*
5. Attaching Entity Conducted Inventory *71*

E. Unauthorized Occupancy or Access **72**
1. Unauthorized Attachments *72*
2. Unauthorized Attachment and Unauthorized Wireless Installation Charge *73*
3. No Ratification of Unauthorized Use *73*
4. Excessive Unauthorized Attachments *73*

F. Operational Duties & Responsibilities **74**
1. Duty to Inspect *74*
2. Knowledge of Work Conditions *74*
3. Duty of Competent Supervision and Performance *75*
4. Requests to De-energize *76*
5. Interruption of Service *76*
6. Duty to Inform *76*
7. Duty to Protect Data *76*
8. Duty to Provide Safety Briefing *76*

IV. Specifications for Wire Attachments **78**

A. Pole Attachment Process **78**

B. Competitive Provider - Standard Process **80**
1. Eligibility *80*
2. Application for Permit Required *80*
3. CPS Energy Review of Application *83*
4. Make-Ready Electrical Space Construction *87*

Section ***Page***

5. Make-Ready Communication Work/Installation – One Touch Transfer 89
6. Make-Ready Communication Work/Installation – Complex Transfers 94
7. Notice of Attachment Completion and Acceptance 98
8. Post Construction Inspection 98

C. Private Network Process 100
1. Eligibility 100
2. Application for Permit Required 100
3. CPS Energy Review of Application 101
4. Make-Ready Electrical Space Construction 101
5. Make-Ready Communication Work/Installation – One Touch Transfer 101
6. Make-Ready Communication Work/Installation – Complex Transfers 101
7. Notice of Attachment Completion and Acceptance 101
8. Post Construction Inspection 101

D. Competitive Provider – Area Wide Network Deployment Process 102
1. Eligibility 102
2. Application for Permit Required 102
3. CPS Energy Review of Application 102
4. Make-Ready Electrical Space Construction 103
5. Make-Ready Communication Work/Installation – One Touch Transfer 108
6. Make-Ready Communication Work/Installation – Complex Transfers 108
7. Notice of Attachment Completion and Acceptance 108
8. Post Construction Inspection 108

E. Competitive Provider – Network Upgrade Process 109
1. Eligibility 109
2. Choice of Process 109
3. Written Notice of Choice 109

F. Competitive Provider – Standard Process for Overlashing Existing Attachments 110
1. Eligibility 110
2. Application for Permit Required 110
3. CPS Energy Review of Application 111
4. Make-Ready Electrical Space Construction 111
5. Make-Ready Communication Work/Installation – One Touch Transfer 111
6. Make-Ready Communication Work/Installation – Complex Transfers 111
7. Notice of Attachment Completion and Acceptance 112
8. Post Construction Inspection 112

Section ***Page***

V. Specifications for Wireless Installations 113

A. Wireless Installation Process 113

B. Standard Process for Wireless Installations 114

1. Eligibility 114
2. Application for Permit Required 114
3. CPS Energy Review of Application 117
4. Make-Ready Electrical Space Construction 121
5. Make-Ready Communication Work/Installation – One Touch Transfer 124
6. Make-Ready Communication Work/Installation – Complex Transfers 127
7. Notice of Attachment Completion and Acceptance 132
8. Post Construction Inspection 132

Section ***Page***

VI. Appendices **Appendix - 1**

A. CPS Energy Attaching Entity Registration & Annual Reporting Form **Appendix - 2**

B. CPS Energy Pole Attachment Program Forms **Appendix - 8**

C. CPS Energy Notice of Dispute Form **Appendix - 25**

D. CPS Energy Specification's for Attachments & Wireless Installations **Appendix - 26**

E. CPS Energy Vertical Clearance Requirements **Appendix - 42**

F. CPS Energy Attachment Clearance Requirements **Appendix - 43**

G. CPS Energy Pole Loading Requirements **Appendix - 44**

H. CPS Energy Schedule of Pole Attachment Rates, Fees and Charges **Appendix – 46**

I. CPS Energy Wireless Installation Diagrams **Appendix – 49**

J. *Reserved for Future Use* **Appendix - 55**

K. CPS Energy Pole Attachment Tag List & Detail **Appendix - 56**

L. *Reserved for Future Use* **Appendix – 58**

M. CPS Energy Equal Opportunity & Anti-Harassment Policy **Appendix – 59**

N. CPS Energy Information Systems Use Policy **Appendix - 63**

O. CPS Energy Tree Trimming Specifications **Appendix - 68**

I. STATEMENT OF PURPOSE

Given the increasing and varied demands of pole use by a large number of disparate communications providers in the San Antonio area, CPS Energy has established these Pole Attachment Standards (Standards) to govern access to and use of CPS Energy Poles. Applicable to all communications providers for attachment of Communications Facilities and Wireless Installations, these Standards provide for a non-discriminatory, uniform, consistent, and streamlined approach for the access and use of CPS Energy Poles in a manner that will facilitate the delivery of the variety of communication services offered today, as well as to assist with speed-to-market processes for future technologies in a manner that is consistent with the safe and reliable operation of CPS Energy Facilities. These Standards will work to ensure that CPS Energy and all communication providers attaching to CPS Energy Poles comply with all applicable laws, standards, regulations, and ordinances.

In adopting these Standards, CPS Energy has attempted to incorporate new and evolving best practices and recommendations that have been developed and endorsed at the national level, such as the Federal Communications Commission's (FCC) recommendations in its National Broadband Plan[1] related to the ability of Attaching Entities to perform Make-Ready Work by utility-approved and qualified contractors. Consistent with the FCC's rules, the Standards also mirror and incorporate national safety standards and federal requirements, such as those developed by the Occupational Safety and Health Administration (OSHA) that are aimed at ensuring the safety of workers and maintaining a safe work environment.[2] At the same time, these Standards, like the FCC's pole attachment access rules, do not woodenly apply national standards when CPS Energy's unique operational experiences and requirements dictate the application of policies, practices, and standards that are more stringent or different than national standards. As the FCC noted,

> *Despite this specificity, the introduction to the NESC [National Electric Safety Code] states that the code "is not intended as a design specification or an instruction manual…In addition to operating under federal, state, and local requirements, a utility normally will have its own operating standards that dictate conditions of access. Utilities have developed their own individual standards and incorporated them into pole attachment agreements because industry-wide standards and applicable legal requirements are too general to*

[1] *Connecting America: the National Broadband Plan*, at 111 (adopted Mar. 15, 2010), available at http://*transition.fcc.gov/national-broadband-plan/national-broadband-plan.pdf*.
[2] https://*www.osha.gov/as/opa/worker/employer-responsibility.html*

> *take into account all of the variables that can arise. A utility's individual standards cover not simply its policy with respect to attachments, but all aspects of its business…Particular utility work methods and equipment may require specific separations between attachments and may restrict the height of the poles that a utility will use… The number of variables makes it impossible to identify and account for them all for purposes of prescribing uniform standards and requirements. Universally accepted codes such as the NESC do not attempt to prescribe specific requirements applicable to each attachment request and neither shall we.*[3]

While CPS Energy has looked to FCC pole attachment access rules for guidance, CPS Energy is not bound by such regulations. State law requires CPS Energy to provide Certificated Providers with non-discriminatory access to its utility distribution poles for the purpose of installing wire Attachments. In addition, CPS Energy must establish annual pole attachment rates at a level not to exceed the rate that would result from the application of the FCC's telecommunications pole attachment formula. Otherwise, the federal Pole Attachment Act and the FCC's pole attachment regulations are not applicable to CPS Energy. Wireless Installations fall outside the scope of these legal requirements. Nevertheless CPS Energy will grant non-discriminatory access to its Poles for Wireless Installations taking into account the burdens that Wireless Installations place on CPS Energy Facilities.

Consistent with these legal requirements and the voluntary commitment of CPS Energy, under these Standards, wire Attachments may be installed on CPS Energy's utility distribution Poles, but not on Streetlight Poles. Conversely, Wireless Installations will have access to all Streetlight Poles and utility distribution Poles, subject to certain restrictions and Make-Ready Work requirements. Consistent with the rate design for wire Attachments, which is based on the rental of one foot of pole space, Wireless Installations will be assessed annual rent based on the number of feet of Pole use.

From a holistic perspective, the Standards seek to balance the competing needs and interests of multiple and varied communications providers to access and utilize CPS Energy's distribution infrastructure, while at the same time recognizing that the core purpose and function of this infrastructure is for CPS Energy's safe and reliable distribution and delivery of electric services to CPS Energy customers. Hence, the use of any CPS Energy's Poles or other facilities must at all times ensure the continued operational integrity, safety and reliability of CPS Energy's Facilities, electric services, personnel and the general public.

[3] *In the Matter of Implementation of the Local Competition Provisions in the Telecommunications Act of 1996, First Report and Order*, ¶ ¶ 1147-1149 (rel. August 8, 1996)

These Standards are organized into six parts:

Section I	this introductory Section
Section II	sets out general administrative provisions
Section III	sets out general technical provisions
Section IV	sets out the specifications applicable to wire Attachments
Section V	sets out the specifications applicable to Wireless Installations
Section VI	contains the Appendices referenced in these Standards

Upon their effective date, these Pole Attachment Standards shall be enforceable by CPS Energy at all times upon any entity that attaches its facilities to a CPS Energy-owned Pole regardless of the status of a Pole Attachment Agreement, Wireless Addendum, Wireless Installation Agreement, Application, or Permit.

CPS Energy reserves the right to amend these Standards at any time and manner in response to market conditions and as necessary to comply with changes in applicable engineering and/or safety standards or changes in local, state or federal law. Any such changes will be applied in a non-discriminatory manner with respect to similarly situated entities and facilities.

To the extent that issues arise that have not been contemplated by these Standards, CPS Energy will work with the Attaching Entities to find a solution that effectively addresses the issue consistently with these Standards.

These Standards supersede all prior CPS Energy pole attachment rules and regulations. Amendments to these Standards will become effective following a notice period as provided in this document and the return of a letter accepting the amendments, as provided in the pro forma Pole Attachment Agreement and Wireless Installation Agreement.

II. GENERAL ADMINISTRATIVE PROVISIONS

A. Definitions

For the purposes of these Standards, the following terms, phrases, words, and their derivations shall have the meaning given herein. When not inconsistent with the context, words used in the present tense include the future tense, words in the plural number include the singular number, and words in the singular number include the plural number. The words "shall" and "will" are mandatory and "may" is permissive. Words not defined shall be given their common and ordinary meaning.

1. **Affiliate** means, when used in relation to an Attaching Entity, another entity that owns or controls, is owned or controlled by, or is under common ownership or control with the Attaching Entity.

2. **Antenna** means an FCC authorized electrical device by which electromagnetic waves are sent out or received. Antennas are inventoried Wireless Installation components.

3. **Antenna Area** means the area on a Pole or Streetlight Pole where the Antenna(s) are installed, which are components of a Wireless Installation. For a Wireless Installation that utilizes the top of a Pole, the Antenna Area shall be the Pole Top Space.

4. **Applicable Engineering Standards** means all applicable engineering and/or safety standards governing the installation, maintenance and operation of facilities and the performance of all work in or around CPS Energy's Facilities and includes CPS Energy's clearance standards, the National Electrical Safety Code (NESC), the National Electrical Code (NEC), the Texas Health & Safety Code, Chapter 752 (Vernon 1992) and any subsequent amendments which relate to the maintenance of proper clearances and related safety issues, the regulations of the Occupational Safety and Health Act (OSHA), applicable regulations of the Federal Communications Commission (FCC), the Environmental Protection Agency (EPA), lawful requirements of Public Authorities, and/or other requirements of CPS Energy that are non-discriminatory to each Attaching Entity as compared to all other similarly situated Attaching Entities and types of facilities.

5. **Application** means a complete Application for a Permit submitted by an Attaching Entity to CPS Energy for the purpose of requesting consent to install a new Attachment, Overlashing, or Wireless Installation onto or supported by one or more CPS Energy Poles or Streetlight Poles. For new Attachments and/or Overlashings, the maximum number of Poles to be considered on a single Application is one-hundred twenty (120) Poles. For Wireless Installations onto a CPS Energy Pole or Streetlight Pole, a single Application may include up to a maximum of thirty (30) Wireless Installation locations, together with the applicable Poles and/or Streetlight Poles, provided that the Wireless Installations are of similar design at each of the locations within the identified boundaries of a Wireless Project Area and consist of Pre-Certified Equipment.

6. **Application Fee** means the non-refundable fee described in Section II.K and Appendix H of these Standards, compensating CPS Energy for the administrative and other work required to process and review an Application.

7. **Application Form** means the form(s), provided in Appendix B, an Attaching Entity is required to submit to CPS Energy, along with all applicable documents, as part of a complete Application in order to request a Permit. Such forms include the Application for Pole Attachment Permit and the Application for Wireless Installation Permit.

8. **Attaching Entity** means any eligible public or private entity that places an Attachment or Wireless Installation on a Pole or Streetlight Pole, in accordance with CPS Energy's applicable requirements, including a Pole Attachment Agreement or Wireless Installation Agreement, as appropriate and these Standards, to provide Communications Service, Wireless Service, or Commercial Mobile Radio Service, or to operate a Private Network.

9. **Attaching Entity Registration & Annual Reporting Form** means the initial registration form, provided in Appendix A, a Requestor must submit in order to enter into a Pole Attachment and/or Wireless Installation Agreement, as appropriate, with CPS Energy; and which must be updated by June 1, 2017 and annually thereafter or as changes warrant.

10. **Attachment** means (a) each aerial cable together with its associated Messenger cable, guy wire, anchors, and associated hardware, and each amplifier, repeater, receiver, appliance or other device or piece of equipment, whether comprised of

steel, aluminum, copper, coaxial, optical fiber, or other media or material utilized to provide Communications Services; and (b) any hardware or equipment identified in Section II.A.25 affixed to a CPS Energy Pole utilizing one foot or less of Communication Space. An Attachment occurs whether Attaching Entity's Communications Facilities are connected to the Pole itself or are supported by an Attachment Arm, bracket, support stand, or other support devices, provided however that Overlashing an existing permitted Attachment and Service Drops shall not count as separate Attachments. This definition shall not apply to communications wires or facilities installed by CPS Energy for its own internal communications requirements or energy Information Services such as automated meter reading.

11. **Attachment Arm** means a CPS Energy approved metal or fiberglass bracket used to support attaching wires away from the face of the Pole in order to meet required specifications and standards.

12. **Attachment Connection Fee** means the total annual rental payment assessed by CPS Energy to each Attaching Entity determined by multiplying [Attachment Rate] x [total number of permitted Attachments for the Attaching Entity].

13. **Attachment Rate** means the annual rate for one foot of space as determined by CPS Energy consistent with Texas Utilities Code, §54.204(c).

14. **Authorization for Make-Ready Work** means the form, provided in Appendix B, CPS Energy shall issue to an Attaching Entity that request's the Attaching Entity's authorization for CPS Energy to undertake Make-Ready Electrical Construction. The Authorization for Make-Ready Work form shall also provide an estimate for the advanced payment cost required to be paid for the Make-Ready Electrical Construction.

15. **Backhaul Network Interface Device** means the network interface enclosure that mark the location where a Communications Facility interconnects with a pole-mounted Wireless Installation for the purpose of providing telecommunications transport service between the Wireless Installation and the host network. The Backhaul Network Interface Device shall be considered the point of demarcation between the Wireless Installation and the provider of telecommunications transport service.

16. **Cabinet Area** means the area of a Pole or Streetlight Pole where the Wireless Equipment Cabinet, Electricity Network Interface Device, and Backhaul Network Interface Device are installed adjacent to each other as part of a Wireless Installation. For a Wireless Installation that does not utilize the top of a Pole, the Cabinet Area shall be located below the Antenna Area.

17. **Cable Services** means the provision of one-way transmission to subscribers of video programming, or other programming service, and subscriber interaction, if any, which is required for the selection or use of such video programming or other programming service by a cable system. Cable Services shall not include Information Services or Video Services, as defined in the Texas Utilities Code §66.002.

18. **Capacity** means the ability of an existing Pole to accommodate an additional Attachment, Overlash, and/or Wireless Installation based on Applicable Engineering Standards, including space, design, and loading considerations.

19. **Certificated Provider** means a competitive service provider of Communications Services, Cable Services, or Video Services that has received a Certificate of Convenience and Necessity, Certificate of Operating Authority, Service Provider Certificate of Operating Authority, or State Issued Certificate of Franchising Authority from the Public Utility Commission of Texas.

20. **City** means the City of San Antonio, Texas.

21. **Civic Project** means any specific project that requires adjustments of CPS Energy Poles, Streetlight Poles, or other CPS Energy Facilities to accommodate federal, state, city, or county roadway reconstruction/widening, drainage improvements, or other type of civic improvement project (reimbursable to CPS Energy or not) within the public right-of-way.

22. **Commercial Mobile Radio Service or CMRS** has the meaning given by federal law at 47 C.F.R. §203.3.

23. **CMRS Provider** means an FCC-authorized provider of CMRS.

24. **Collection Notice Letter** means a letter of notification produced by the CPS Energy Claims Department itemizing charges owed to CPS Energy as a result of damages to CPS Energy Facilities caused by an Attaching Entity, or its contractors, subcontractors, or agents, or by a third-party causing damage to the Attaching

Entity's Attachments, Communication Facilities, and/or Wireless Installations and by extension to CPS Energy Facilities. This letter constitutes CPS Energy's tender for recovery of all costs associated with repairs to the damaged facilities.

25. **Communications Facility** means a wire or cable facilities including, but not limited to, a fiber optic, copper and/or coaxial cable or wire utilized by an Attaching Entity to provide Communications Services, including any and all associated equipment. A Communications Facility also includes a Messenger or other material, appurtenance, or apparatus of any sort necessary or desirable for use in the provision of an Attaching Entity's Communications Services. A Communication Facility shall not include an Antenna or wireless Remote Radio Head.

26. **Communications Services** means the provision of service, including but not limited to Telecommunications Services, Cable Services, Video Services, or Information Services over wire or cable facilities utilizing Attachments to Poles. This definition excludes Attachments made by private entities and public organizations, such as schools, universities, and units of local government, that operate a Private Network used for non-commercial communications purposes.

27. **Communications Space** means the portion of a Pole's usable space designated for the installation of Communications Facilities, the top of which is forty (40) inches below CPS Energy's Neutral or lowest electrical supply conductor.

28. **Communication Worker Safety Zone** means that space on a Pole measured from the location of the Neutral to a location forty (40) inches below the Neutral as described in the NESC.[4]

29. **Competitive Provider – Area Wide Network Deployment Process** means the Application submission and Permit approval process applicable to a Certificated Provider engaged in a broadband network deployment within the CPS Energy service area characterized by an Attaching Entity's submission of Applications to attach or Overlash to Poles that would result in an estimated replacement of eighty (80) or more Poles per month; and the responsibility to prepare Make-Ready Engineering, manage Make-Ready Electrical Construction and Make-Ready

[4] NESC, Rule 235.C.4 and 238.E, C2-2017.

Communications Construction, and incur all expenses associated with Make-Ready Work.

30. **Competitive Provider – Network Upgrade Process** means the Application submission and Permit approval process applicable to a Certificated Provider engaged in a broadband network deployment within the CPS Energy service area; and the responsibility to prepare Make-Ready Engineering, manage Make-Ready Communications Construction, the option to manage Make-Ready Electrical Construction, and incur all expenses associate with Make-Ready Work.

31. **Completion of Attaching Entity Construction** means the form, provided in Appendix B, an Attaching Entity shall issue to CPS Energy providing written notice of completion of either (1) Make-Ready Communication Construction, (2) Make-Ready Wireless Installation Construction, or (3) Make-Ready Electrical Construction, as appropriate.

32. **Complex Transfer** means the transfer or relocation of a third-party Attachment or Overlash onto a CPS Energy Pole that will require cutting and splicing of a Communication Facility resulting in a network and/or customer outage affecting the Attaching Entity that owns the Communication Facility subject to transfer or relocation, or the transfer or relocation of such an Attached or Overlash Communication Facility located over and across a state or federal highway.

33. **CPS Energy Facilities** means all personal property and real property owned or controlled by CPS Energy, including Poles and Streetlight Poles.

34. **Critical Communications Facility** means a Communications Facility that must provide "always on" connectivity for public safety communications or public health operations whose failure would pose a potential imminent threat to public health or safety.

35. **Deployment Plan** means a document prepared by an Attaching Entity that shall include: (1) footprint of the network buildout illustrated in a map depicting the municipal jurisdiction, or parts thereof, within the CPS Energy service area expected to be covered by the project; (2) overall network deployment schedule and phasing; (3) map of backbone fiber rings routes, if any; (4) description of overall physical plant architecture and design; (5) description of typical Service Drop installations; (6) estimated number of Poles expected to be attached to including a reasonable "ramp-up" and "ramp-down" plan; (7) project and corporate

organizational chart for the Attaching Entity; and (8) signature page attesting to the veracity of the Deployment Plan executed by an authorized officer of the Attaching Entity. A Deployment Plan is required under the Competitive Provider – Area Wide Network Deployment Process and the Competitive Provider – Network Upgrade Process.

36. **Distributed Antenna System or DAS Systems** means an outdoor system of Antenna nodes and associated Wireless Equipment Cabinets attached to Poles or Streetlight Poles interconnected by one or more fiber or coaxial cable Communication Facilities and supported by communications equipment and components housed within a hut structure located on private or public property away from CPS Energy Facilities.

37. **Electrical Space or Supply Space** means the upper portion of a Pole reserved for the installation of electric distribution facilities to support existing and planned electric distribution equipment as described in the NESC.

38. **Electricity Network Interface Device** means the network interface enclosure, owned and controlled by CPS Energy, where electricity is delivered to pole-mounted Wireless Installation. The Electricity Network Interface Device shall be considered the "Point of Delivery" under CPS Energy's Electric Service Standards, as amended by CPS Energy from time to time.

39. **Emergency** means the existence of a situation which, in the reasonable discretion of CPS Energy or the Attaching Entity, if not remedied immediately will result in a threat to public safety, a hazardous condition, damage to property or a service outage.

40. **Engineer** means any licensed professional engineering firm approved by CPS Energy to complete Engineering work on CPS Energy Facilities.

41. **Federal Communications Commission (FCC)** means the independent federal agency established to regulate, in the public interest, communications by radio and wire.

42. **Information Services** means the offering of a capability for generating, acquiring, storing, transforming, processing, retrieving, utilizing, or making available information via telecommunications, and includes electronic publishing and cable modem service, but does not include any use of any such capability for the

management, control, or operation of a telecommunications system or the management of a telecommunications service.

43. **Infrastructure Provider** means an Attaching Entity that may or may not be a Certificated Provider that owns no licensed frequencies, but that invests in Wireless Installations for the purpose of leasing its Communications Facilities and Wireless Installations to a CMRS Provider that utilizes such facilities to embed proprietary technology that allows the leased facilities to transmit and receive the CMRS Provider's licensed frequencies. Such leased facilities are interconnected with the CMRS Providers wireless network to expand network capacity.

44. **Infrastructure Provider Sublicensee** means a CMRS Provider that leases Communication Facilities and Wireless Installations from an Infrastructure Provider for the purpose of providing or expanding wireless network capacity that has executed its own Wireless Installation Agreement.

45. **Intermodulation Test** means a report that contains a mathematical model identifying potential interference based on computational harmonic mixing of proposed and existing transmit and receive frequencies in the immediate vicinity.

46. **Joint Meeting Transfer** means the coordinated transfer of a pole-mounted Wireless Installation by its owner to take place at the same time as an Attaching Entity schedules the installation of a new Attachment, Overlash, or Mid-span Installation onto or supported by the same Pole that hosts the Wireless Installation, which requires adjustments of existing Attachments or Pole replacement as part of the One-Touch Transfer Process.

47. **Inventory** means a complete count of all Attachments and Wireless Installations, including authorized Attachments and Wireless Installations, and Unauthorized Attachments and Unauthorized Wireless Installations, on CPS Energy-owned Poles and Streetlight Poles within the CPS Energy service territory.

48. **Make-Ready Charges** means all reasonable administrative, engineering design, construction, inspection, and management charges associated with Make-Ready Work.

49. **Make-Ready Communication Construction** means that portion of Make-Ready Work associated with construction work requiring access to Communication Facilities within the Communication Space of a Pole, including, but not limited to

the movement, transfer, relocation, or modification of an existing Attachment, Overlash, Mid-span Installation; the replacement of a Pole; and all other construction activities necessary to accommodate the installation of a new Attachment, Overlash, or Mid-span Installation. Make-Ready Communications Construction shall include, where applicable, the nexus between aerial and underground communication construction.

50. **Make-Ready Electrical Construction** means that portion of Make-Ready Work associated with construction work requiring access to CPS Energy Facilities within the Electrical or Supply Space, which includes, but is not limited to the movement, transfer, relocation, or modification of CPS Energy electric distribution facilities; the replacement of a Pole; and all other construction activities necessary to accommodate the installation of a new Attachment, Overlash, or Wireless Installation. Make-Ready Electrical Construction shall include, where applicable, the nexus between aerial and underground electrical construction.

51. **Make-Ready Engineering** means that portion of Make-Ready Work associated with the preparation, submission, review, and approval of the Attaching Entity's Application for Attachment or Wireless Installation Permit. Make-Ready Engineering shall include, but not limited to, the preparation of the following in support of the Application: the Pre-Construction Survey; the engineering design document(s) for Make-Ready Electrical Construction, Make-Ready Communications Construction, and Make-Ready Wireless Installation Construction; and the submission of such documents to CPS Energy for review, potential modification, and approval. Make-Ready Engineering shall include, where required, the approval of a professional engineer, and the engineering design specifications related to the nexus between aerial and underground construction of Communications Facilities as part of Make-Ready Communications Construction of a Wireless Installation as part of Make-Ready Wireless Construction, and of electrical distribution facilities as part of Make-Ready Electrical Construction.

52. **Make-Ready Wireless Installation Construction** means that portion of the Make-Ready Work associated with construction work requiring access to a Pole below the Communications Space and the Pole Top Space, as necessary, or access to a Streetlight Pole at any location that does not interfere with the streetlight components including, but not limited to the movement, transfer relocation, or modification of an existing Attachment or Overlash when a pole replacement is

necessary or otherwise in order to accommodate the Wireless Installation components; and all other construction activities necessary to accommodate the Wireless Installation on a Pole. Make-Ready Wireless Installation Construction shall include, where applicable, the nexus between aerial and underground communications construction.

53. **Make-Ready Work** means all work that is required to accommodate an Attaching Entity's Attachment, Overlash, or Wireless Installation onto a Pole or Streetlight Pole as appropriate in compliance with the Applicable Engineering Standards. Make-Ready Work may include, but is not limited to, Make-Ready Engineering, Make-Ready Electrical Construction, Make-Ready Communications Construction, Make-Ready Wireless Installation Construction; along with CPS Energy's review of the Application, engineering design documents, Pole Loading Analysis documents, engineering work, construction work, permitting work, tree trimming (other than tree trimming performed for normal maintenance purposes), Pole or Streetlight Pole replacement, and the Post-Construction Inspection.

54. **Messenger** means any cable owned by an Attaching Entity extending between Poles which is used as support for a Communications Facility or upon which a Mid-span Installation is clamped.

55. **Mid-span Installation** means Wireless Equipment attached to a Messenger cable suspended between two Poles, in the Communication Space, that was manufactured for this type of installation and designed to connect by means of an Overlash Communications Facility for the purpose of providing Wireless Service.

56. **National Electrical Safety Code (NESC)** means the current edition published by the Institute of Electrical and Electronic Engineers (IEEE) as may be amended or supplemented from time-to-time.

57. **National Joint Utilities Notification System (NJUNS)** means the national not-for-profit organization that helps support effective communication between utilities and Attaching Entities.

58. **Network Operations Center (NOC)** means a centralized location from which an Attaching Entity administrators remotely supervises, monitors, and maintains the day-to-day operations of a network. The scope of responsibilities of a NOC may be national or regional in nature.

59. **Neutral** means the conductor used to carry unbalanced current. In single-phase systems, the conductor used for a return current path.

60. **Notice of Dispute Form** means the form that an Attaching Entity must use to dispute CPS Energy's determination of liability associated with a claim for damages caused to CPS Energy Facilities by the Attaching Entity, or its contractors, subcontractors, or agents. This form is provided in Appendix C.

61. **Notice to Proceed** means the form, provided in Appendix B, CPS Energy shall issue to an Attaching Entity that provides written notification that the Attaching Entity may proceed with either (1) Make-Ready Communication Construction, (2) Make-Ready Wireless Installation Construction, or (3) Make-Ready Electrical Construction, as appropriate.

62. **Notice of Safety Violation** means the form, provided in Appendix B, CPS Energy shall issue to an Attaching Entity providing written notice of CPS Energy's identification of a Safety Violation with one or more of the Attaching Entity's Attachments, Overlashings, or Wireless Installations.

63. **Notice of Safety Violation Assessment Charge** means the form, provided in Appendix B, CPS Energy shall issue to an Attaching Entity providing written notice of the levying of a Safety Violation Assessment Charge to the Attaching Entity.

64. **Notice of Unauthorized Attachment or Unauthorized Wireless Installation** means the form, provided in Appendix B, CPS Energy shall issue to an Attaching Entity providing written notice of CPS Energy's identification of an Unauthorized Attachment or Unauthorized Wireless Installation owned by the Attaching Entity.

65. **One-Touch Transfer** mean the transfer, relocation, or alteration of third-party Communication Facilities or Mid-span Installations whether conducted by an Attaching Entity or CPS Energy subject to the requirements described in Section IV.B.5, and Section V.B.5.

66. **Overlash (or Overlashing)** means to place an additional wire or cable Communications Facility onto an existing Attachment or Messenger already secured to the Pole in order to accommodate additional wire or cable Communications Facility capacity.

67. **Pedestals/Vaults/Enclosures** means above- or below-ground housings that are used to enclose a cable/wire splice, power supplies, amplifiers, and passive devices

and/or provide a service connection point and that shall not be attached to CPS Energy Poles.

68. **Permit (Permit for Attachment or Wireless Installation)** means the written or electronic authorization from CPS Energy to make or maintain an Attachment, Overlash, or Wireless Installation to a specific CPS Energy Pole or Streetlight Pole pursuant to the requirements of the Pole Attachment and/or Wireless Installation Agreement and these Standards.

69. **Pole** means an electric distribution system utility pole owned by CPS Energy carrying primary and/or secondary voltages with phase to neutral voltages up to and including 20 kilovolts (kV) that is capable of supporting an Attachment, Overlash, or Mid-span Installation, and/or a Wireless Installation.

70. **Pole Attachment Agreement** means an executed agreement between CPS Energy and a Requestor that adopts and incorporates these Standards by reference, and under which the Requestor agrees to abide by the terms and conditions of the Agreement as well as the duties and obligations set out in these Standards as they may be amended from time to time. A Pole Attachment Agreement shall include additional legal protections and obligations of the parties not specifically covered in the Standards.

71. **Pole Attachment Program** means the development, implementation, and operation of the CPS Energy Pole Attachment Standards including but not limited to the execution of applicable Pole Attachment and Wireless Installation Agreements, review of Applications, completion of appropriate Make-Ready Work, inspection of Make-Ready Work, issuance of Permits, coordination of networks deployments and expansions, resolution of conflicts and disputes, provision of applicable invoices, conducting workshops, accepting stakeholder input, amending the Standards as appropriate, enforcing the Standards, conducting Inventories, and all other general program administration and duties.

72. **Pole Attachment Standards (or Standards)** means these "CPS Energy Pole Attachment Standards" with an initial effective date of August 1, 2016, and as amended from time to time.

73. **Pole Attachment Standards Revision Request (PASRR)** means the form, provided in Appendix B, any stakeholder shall submit to CPS Energy to propose a revision(s) to these Standards.

74. **Pole Attachment Standards Revision Request (PASRR) Comment Form** means the form, provided in Appendix B, any stakeholder shall submit to CPS Energy in which the stakeholder may provide comments to a PASRR during the PASRR's comment period.

75. **Pole Top Space** means the top portion of a hollow composite Pole designated for the installation of up to three (3) Antennas which are components of a Wireless Installation, the bottom of which shall begin one inch (1") above the highest electrical supply conductor and continue for at least fifty-four inches (54"). The Pole Top Space shall be divided into two sections. The bottom section shall establish a two foot (2') clearance between the highest electrical conductor on the Pole (separated by one inch (1")) and the location of the lowest Antenna. The top section shall establish the location for Antenna installations and may not exceed thirty inches (30") in length. For Wireless Installations that utilize the top of a Pole, the Pole Top Space shall be considered the Antenna Area. Wood Poles are not subject to the pole-top installation of Antennas and therefore do not have Pole Top Space.

76. **Post-Construction Inspection** means the survey inspection required by CPS Energy to determine and verify that the Make Ready Electrical Construction, Make-Ready Communications Construction, Make-Ready Wireless Installation Construction, and all other Make-Ready Work, including the installation of an Attachment, Overlash, and/or Wireless Installation was made in accordance with Applicable Engineering Standards, the Application, and all other Permit requirements.

77. **Pre-Certified Equipment** means Wireless Equipment for which the Attaching Entity has submitted manufacturing specifications and information to CPS Energy for review and approval and that CPE Energy has approved or pre-certified.

78. **Pre-Construction Survey** means the field survey and all other work and operations required by Applicable Engineering Standards to determine the Make-Ready Work necessary to accommodate an Attaching Entity's Communications Facilities or Wireless Installation onto a Pole or Streetlight Pole as appropriate. Such work includes, but is not limited to, field inspection and administrative processing. The field survey to be done prior to preparation of Make-Ready Engineering shall be conducted by the Attaching Entity's Engineer or other qualified employee or agent.

79. **Private Network** means a communications network constructed for the purpose of meeting the internal communications needs a public or private entity that is an Attaching Entity, but which is not a Certificated Provider or CMRS Provider and is not in the business of providing Communications Services or Wireless Services to the general public for a profit.

80. **Public Right of Way** means the area on, below, or above a public roadway, highway, street, public sidewalk, alley, waterway, or utility easement in which the City of San Antonio or other governmental entities within the CPS Energy service area has an interest.

81. **Receiver** means any electronic device the purpose of which is to collect, amplify, and/or control radio frequencies.

82. **Remote Radio Heads (RRH)** means a transceiver with transmitting and receiving capability of radio frequencies. The RRH will be served by optical fiber, direct-current power, and output to a single or multiple Antennas. Remote Radio Heads are an inventoried Wireless Installation component.

83. **Request for Pre-Certification of Wireless System** means the form, provided in Appendix B, an Attaching Entity shall submit to CPS Energy to request CPS Energy to review and approve Pre-Certified Equipment for a Wireless Installation.

84. **Request for Temporary Attachment** means the form, provided in Appendix B, an Attaching Entity shall submit to CPS Energy to request permission to install a temporary Attachment.

85. **Request for Waiver of Applicable Engineering Standards (Waiver Request)** means the form, provided in Appendix B, an Attaching Entity shall submit to CPS Energy to request a waiver of one or more Applicable Engineering Standards.

86. **Requestor** means an eligible entity that submits an Attaching Entity Registration & Annual Reporting Form in order to enter into a Pole Attachment and/or Wireless Installation Agreement with CPS Energy under which it may submit Applications for Permits to access CPS Energy's Poles or Streetlight Poles for the purpose of installing Attachments, Overlashings, and/or Wireless Installations.

87. **Reserved Capacity** means Capacity or space on a Pole or Streetlight Pole that CPS Energy has identified and reserved for its own core electric utility service and lighting requirements, including space for any and all associated internal

communications functions that are essential to the proper operations of such core electric utility service, pursuant to reasonable projected need.

88. **Riser** means metallic or plastic encasement materials supported by metal standoff brackets placed vertically on a Pole or Streetlight Pole to guide and protect communication wires and cables where they transition from overhead to underground or vice-versa.

89. **Safety Briefing** means a document or presentation materials prepared by an Attaching Entity and provided to CPS Energy to educate CPS Energy employees and contractors regarding specific process on how to work safely near and/or around the Attaching Entity's specific Wireless Installation technologies and locations.

90. **Safety Violation** means a violation of the Applicable Engineering Standards which: (a) is reasonably expected to endanger life or property; or (b) poses a potential safety risk to any CPS Energy or Attaching Entity employee or contractor, or to the general public.

91. **Safety Violation Assessment Charge** means the charge payable by an Attaching Entity for a Safety Violation as described in Appendix H.

92. **Service Drop** means a single wired drop installed to provide Communications Service to an individual customer measured from the customer premises to the closest available Pole without requiring any additional anchors or guys to comply with all Applicable Engineering Standards. Unless otherwise stated herein, Service Drops are subject to all terms and conditions of these Standards.

93. **Simple Transfer** means the transfer, relocation, or alteration of any Attachment or Overlash on an existing Pole or onto a new Pole that does not require cutting and splicing of the Communication Facility subject to such transfer, relocation, or alteration. A Simple Transfer may include the transfer, relocation, or alteration of a Wireless Installation that is mounted or otherwise supported by a Pole.

94. **Streetlight Pole** means a pole structure of a non-decorative nature owned by CPS Energy that is not part of the electric distribution system which primary function is to support equipment used to provide overnight streetlight service or all night area light service and which is capable of supporting a Wireless Installation, but excluding any Mid-span Installations.

95. **Tag** means to place a distinct marker within twelve inches (12") of a Pole or Streetlight Pole on the wires and cables, coded by number, color, or other means that will readily identify the owner of the Attachment Mid-span Installation or Wireless Installation as set forth at Appendix K. The Tag shall be consistent with accepted communications industry standards.

96. **Tagging Plan** means a written plan developed by the Attaching Entity at the request of CPS Energy to address and remedy untagged or incorrectly tagged Attachments, Overlashings, or Wireless Installations.

97. **Telecommunications Services** means that definition provided at 47 U.S.C. §153(46), including any revisions to that definition.

98. **Tier 1 Revisions** means revisions to the CPS Energy Pole Attachment Standards which do not require changes in the collection of field data necessary to prepare an Application for submission.

99. **Tier 2 Revisions** means revisions to the CPS Energy Pole Attachment Standards which require changes in the collection of field data necessary to prepare an Application for submission.

100. **Transmitter** means any electronic device which purpose is to generate, amplify, and/or control, radio frequencies.

101. **Unauthorized Attachment** means any Attachment or Overlash of an Attaching Entity (a) for which the Attaching Entity failed to obtain a Permit; or (b) which is not in compliance with the requirements of the Permit issued for said Attachment or Overlash. An Attachment installed by an entity that failed to execute a Pole Attachment Agreement or installed after the expiration or termination of a Pole Attachment Agreement shall also be considered an Unauthorized Attachment.

102. **Unauthorized Attachment Charge** means the charge payable by an Attaching Entity for Unauthorized Attachments as described in Appendix H.

103. **Unauthorized Wireless Installation** means any Wireless Installation of an Attaching Entity (a) for which the Attaching Entity failed to obtain a Permit; or (b) that is not in compliance with the requirements of the Permit issued for said Wireless Installation. A Wireless Installation installed by an entity that failed to execute a Wireless Installation Agreement, or Wireless Addendum, or by an entity

after contract expiration or termination shall also be considered an Unauthorized Wireless Installation.

104. **Unauthorized Wireless Installation Charge** means the charge payable by an Attaching Entity for Unauthorized Wireless Installation as described in Appendix H.

105. **Video Services** means video programming services provided through wireline facilities located at least in part in the public right-of-way without regard to delivery technology, including Internet protocol technology.

106. **Wireless Addendum** means an addendum to a Pole Attachment Agreement that grants the eligible Attaching Entity a general license to submit Applications to CPS Energy for Wireless Installations. Together with a Pole Attachment Agreement, a Wireless Addendum grants an Attaching Entity substantially the same privileges and obligations for the construction, operation, or use of Wireless Installations as a standalone Wireless Installation Agreement.

107. **Wireless Equipment** means any FCC-authorized radio equipment components owned by an Attaching Entity used for a Wireless Installation, including Antennas, Remote Radio Heads, Transmitters, transceivers, and related equipment on a pole-mounted Wireless Installation.

108. **Wireless Equipment Area** means the space on a Pole or Streetlight Pole comprising of the area where the following components of a Pole-mounted Wireless Installation are located: (i) Antenna Area; (ii) Wireless Equipment Cabinet(s) which may include Remote Radio Heads; (iii) Electricity Network Interface Device; and (iv) Backhaul Network Interface Device. For a Wireless Installation utilizing the Pole Top Space, the Wireless Equipment Area will not include the Antenna Area.

109. **Wireless Equipment Cabinet** means a weather-tight enclosure that houses Wireless Installation equipment and components. Wireless Equipment Cabinets are inventoried Wireless Installation components.

110. **Wireless Installation** means an Attaching Entity-owned installation the components of which are mounted onto or supported by a Pole or Streetlight Pole that sends and/or receives licensed or unlicensed radio frequency signals, and consists of several wireless components, including but not limited to Wireless

Equipment, panel, omnidirectional, or directional Antenna(s); structures to support Transmitters, Receivers, Antennas; wireless network components; Riser cable; conduits; Wireless Equipment Cabinets; accessory equipment; and other ancillary equipment. The term Wireless Installation also includes a Mid-span Installation suspended between two Poles and a DAS System that utilizes multiple Poles or Streetlight Poles.

111. **Wireless Installation Agreement** means an executed agreement between CPS Energy and a Requestor or an executed Wireless Addendum, if applicable, that grants a license to install Wireless Installations, that adopts and incorporates these Standards by reference, and that incorporates the agreement of a Requestor to abide by the terms and conditions of such agreement as well as the duties and obligations set out in these Standards as they may be amended from time to time. A Wireless Installation Agreement shall include additional legal protections and obligations of the parties not specifically covered in the Standards. Throughout these Standards, when the term "Wireless Installation Agreement" is used, it shall also include a "Pole Attachment Agreement" coupled with a "Wireless Addendum" if appropriate.

112. **Wireless Installation Fee** means the total annual rental payment assessed by CPS Energy to each Attaching Entity that owns Wireless Installations determined by multiplying the [Wireless Rate] x [total number of pole-feet occupied by an Attaching Entity's Wireless Installations].

113. **Wireless Interference** means the material adverse effect of unwanted energy due to one or a combination of emissions, radiations, or inductions upon reception in a pre-existing radio communication system, manifested by any material performance degradation, misinterpretation, or loss of information which could be extracted in the absence of such unwanted energy.

114. **Wireless Project Area** means a defined urban or suburban geographical area identified by an Attaching Entity for the deployment of one or more Wireless Installations utilizing the same technology at each installation in order to provide, or enhance the provision of, Wireless Service or Commercial Mobile Radio Service. A Wireless Project Area shall consist of a small portion of the overall service area covered by the Certificated Provider or CMRS Provider on whose behalf the Wireless Installations are deployed, and is not considered part of a Deployment Plan.

115. **Wireless Rate** means the annual rate per one foot of space used by a Wireless Installation as determined by CPS Energy consistent with the Attachment Rate.

116. **Wireless Service** means the provision of authorized voice, video or data services, including but not limited to Telecommunications Services, over Wireless Installations.

B. Registration of Entity

1. **Initial Registration Information.** Before executing a Pole Attachment or Wireless Installation Agreement, a Requestor must submit a complete an Attaching Entity Registration & Annual Reporting Form, a copy of which is provided in Appendix A and available to download at *www.cpsenergy.com/poleattachments*, to CPS Energy. The Attaching Entity Registration & Annual Reporting Form must indicate:

   a) Corporate name of the Requestor;

   b) Corporate contact information;

   c) Contact information for a primary liaison and an escalation list of company personnel responsible to respond to any operational requests from CPS Energy;

   d) Whether the entity holds a certificate from the Public Utility Commission of Texas (PUCT); and

   e) If the entity has been granted a franchise, license agreement, permit or ordinance by the City of San Antonio or a suburban city within the CPS Energy service area.

   f) If the Requestor is an Infrastructure Provider, identify the name and contact information of the Infrastructure Provider Sublicense(s) under contract with Requestor.

   The Requestor shall provide copies of the PUCT certificate and any franchise or license agreements, permits, or ordnances with the Attaching Entity Registration & Annual Reporting Form authorizing access to the Public Rights of Way within the CPS Energy service area. CPS Energy shall have no obligation to execute a Pole Attachment or Wireless Installation Agreement or approve an Application for a Permit within any part of its service area to any Requestor that has not been granted the right to use Public Right of Ways for the installation of such Attachments or Wireless Installations.

2. **Updates to Registration Information.** Pursuant to Section II.F, the Attaching Entity Registration & Annual Reporting Form must be updated and submitted to CPS Energy by June 1, 2017 and annually thereafter or as changes in Attaching Entity's information warrant. The Attaching Entity has an obligation and duty to maintain the accuracy of the information in the Attaching Entity Registration &

Annual Reporting Form at all times. *CPS Energy is not obligated to contact any person not listed on the Attaching Entity Registration & Annual Reporting Form*.

C. Execution of Pole Attachment and/or Wireless Installation Agreement

Every registered Requestor must execute a Pole Attachment and/or a Wireless Installation Agreement that incorporates these Standards by reference, and CPS Energy must countersign such agreement(s), before the Requestor may submit an Application. Except as otherwise set out herein, an Application must be submitted in compliance with these Standards for every new Attachment, Overlash, and/or Wireless Installation that an Attaching Entity seeks to make to a CPS Energy Pole or Streetlight Pole. CPS Energy's Pole Attachment Application process is described in detail in Section IV (for wire Attachments) and in Section V (for Wireless Installations) of these Standards.

CPS Energy may approve or deny an Application, in whole or in part, for reasons of safety, reliability, or insufficient Capacity that cannot be resolved in a manner consistent with the Applicable Engineering Standards; and subject to the conditions, processes, and timelines outlined in these Standards. The uninterrupted processing of an Attaching Entity's Application is contingent on the timely payment of invoices for Attachments and Wireless Installations and compliance with the requirements and specifications of these Standards.

The issuance of a Permit is the only means for securing the privilege to make an Attachment and/or Wireless Installation to any CPS Energy Pole or Streetlight Pole.

1. **Separate Agreements Required for Wire Attachments and Wireless Installations.** A wire Attachment may only be attached to CPS Energy Poles pursuant to a Pole Attachment Agreement; and a Wireless Installation may only be attached to a Pole or Streetlight Pole pursuant to a Wireless Installation Agreement or a Pole Attachment Agreement that has been amended or supplemented through the execution of a Wireless Addendum. A Pole Attachment Agreement does not convey any license, claim, or rights to attach Wireless Installations onto any Attachments on CPS Energy Poles as either a Mid-span Installation or pole-mounted installation means. Absent a separate Wireless Installation Agreement or a Pole Attachment Agreement that has been amended or supplemented through the execution of a Wireless Addendum, any Wireless Installation or Mid-span Installation found mounted onto a Pole, Streetlight Pole, or clamped mid-span onto an Attaching Entity's Messenger cable shall be considered an Unauthorized

Wireless Installation subject to Unauthorized Wireless Installation Charges and any other sanctions specified herein.

2. **Standards Applicable Regardless of Effective Agreement.** Upon their effective date, these Standards shall be applicable to all Attachments, Wireless Installations, and related Communication Facilities of an Attaching Entity whether or not the Attaching Entity is a party to a valid and existing Pole Attachment Agreement, Wireless Installation Agreement, or Wireless Addendum. Any Attachments or Wireless Installations in place at the time the corresponding Pole Attachment Agreement, Wireless Installation Agreement, or Wireless Addendum expires or terminates, as well as any additional Unauthorized Attachments installed subsequent to such expiration or termination but prior to the execution of a successor agreement, will be subject to these Standards. Upon execution of a successor Pole Attachment Agreement, Wireless Installation Agreement, or Wireless Addendum; these Standards will remain in effect and shall be incorporated into the contractual terms in such successor agreement(s). This Section II.C.2, is not intended to supersede, eliminate, or substitute any contractual protections or duties included in such successor agreement(s).

D. Specify Type of Attachments

When submitting an Application for a Permit, the Attaching Entity must specify whether the Application is for a wire Attachment or Wireless Installation. The comingling of wire Attachments and Wireless Installations under one Application is strictly prohibited. In such instances, a wire Attachment Application and an accompanying Wireless Installation Application may be submitted and considered by CPS Energy together as a single project provided the Attaching Entity identifies these Applications as "associated" on the appropriate Application Forms.

No person or entity is authorized to install an Attachment, Overlash, Wireless Installation, or Mid-Span Installation on to a Pole or Streetlight Pole without first executing the appropriate Pole Attachment Agreement, Wireless Installation Agreement, or Wireless Addendum; submitting a complete Application, and securing and receiving a Permit for the Attachment or Wireless Installation contemplated.

E. Termination of Permit

1. **Automatic Termination of Permit.** Any Permit issued pursuant to these Standards shall automatically terminate when the Attaching Entity ceases to have authority to construct and operate its Communications Facilities and/or Wireless Installations on public or private property, including federal property, at the location of the particular Pole or Streetlight Pole covered by the Permit.

2. **Surrender of Permit**. An Attaching Entity may at any time surrender any Permit and remove the corresponding Attachment(s) and/or Wireless Installation(s) from the affected Pole(s) or Streetlight Pole(s); provided, however, that before commencing any such removal, the Attaching Entity must provide a twenty-one (21) calendar days advance written notice and sketch of the facilities to be removed to CPS Energy, including the name of the Attaching Entity or other qualified contractor performing such work and the date and time during which such work will be undertaken and completed. All such work is subject to the insurance requirements of the corresponding Pole Attachment Agreement or Wireless Installation Agreement. No refund of any fees or costs paid to CPS Energy will be made upon removal.

   If an Attaching Entity surrenders such Permit pursuant to the provisions of this Section II.E.2, but fails to remove its Attachments and/or Wireless Installations from CPS Energy's Facilities within sixty (60) calendar days thereafter, CPS Energy shall have the right to remove the Attachments and/or Wireless Installations at the Attaching Entity's expense.

F. Annual Reporting Requirements

As required by Section II.B.2, Attaching Entities must submit an update to the Attaching Entity Registration & Annual Reporting Form by June 1, 2017 and annually thereafter. Concurrently with submitting the updated Attaching Entity Registration & Annual Reporting Form, the Attaching Entity shall report the following to CPS Energy:

1. **List of Installations.** The Attaching Entity shall provide a list of specific Poles and/or Streetlight Poles (by CPS Energy Pole number, if available) on which the Attaching Entity has installed, during the previous twelve (12) month reporting period new Attachments, Overlashings, and/or Wireless Installations, including

risers and Service Drops, or any other facility for which no Permit was required per Section IV.B.2.b.

2. **List of Non-Functional Attachments.** The Attaching Entity shall provide a list of all Attachments, Overlashings, Wireless Installations, or other equipment that have either become non-functional, surrendered, or for which the Attaching Entity is no longer paying the annual Attachment Connection Fee or Wireless Installation Fee during the previous twelve (12) month reporting period. The report shall identify the specific Pole or Streetlight Pole (by CPS Energy Pole number, if available) on which the nonfunctional Attachment, Overlash, Wireless Installation, or other equipment is located and provide a description of the nonfunctional equipment.

3. **Removed Equipment.** The Attaching Entity shall provide a list of all Attachments, Overlashings, Wireless Installations, or other equipment removed (and not replaced by substantially similar equipment) from specific Poles or Streetlight Pole (by CPS Energy Pole number, if available) during the previous twelve (12) month reporting period. The report shall identify the Pole from which the equipment was removed, a description of the removed equipment, and indicate the approximate date of removal. This requirement does not apply where the Attaching Entity surrenders a Permit pursuant to Section II.E.2.

4. **Emergency Contact.** The Attaching Entity shall maintain current at all times the emergency contact information required by the Pole Attachment Agreement and the Wireless Installation Agreement, along with contact information for their Network Operations Center.

5. **Failure to Report**. Failure of an Attaching Entity to provide CPS Energy the updated Attaching Entity Registration & Annual Reporting Form required by this Section II.F within forty-five (45) calendar days following issuance of written notice of the failure to comply timely with the annual reporting requirements of this section shall result in CPS Energy suspending all work on the Attaching Entity's pending Applications or which may be submitted after the suspension date. Within three (3) business days of CPS Energy receiving the updated Attaching Entity Registration & Annual Reporting Form, CPS Energy shall resume processing the Attaching Entity's Applications in the order that they were initially received by CPS Energy.

6. **Right to Audit**. CPS Energy reserves the right to perform an audit on any annual reporting required by this Section II.F to validate the information provided. Failure to provide accurate reporting will subject the Attaching Entity to the provisions provided in Section II.F.5 above.

G. Notices

1. **Notice of Revisions to the Pole Attachment Standards.** CPS Energy shall publish any proposed revisions to these Standards on the CPS Energy public website, *www.cpsenergy.com/poleattachments*. CPS Energy shall also send electronic notice to the primary contact and email address for each Attaching Entity provided in the Attaching Entity Registration & Annual Reporting Form, as described in Section II.B. CPS Energy is under no obligation to contact anyone other than the primary contact provided with regard to notice under this Section II.G. CPS Energy shall enforce and an Attaching Entity shall adhere to the revised Standards for new Applications on their effective date. Notwithstanding the previous sentence, no revisions to the Applicable Engineering Standards shall be retroactive to existing permitted Attachments, Overlashings, and/or Wireless Installations, unless required by city, county, state, or federal law or if the Attachment, Overlash, and/or Wireless Installation is modified after the effective date of the revised Standards. If an Attachment, Overlash and/or Wireless Installation is modified, including without limitation moved, upgraded, repaired, replaced, or Overlashed (in the case of an existing Attachment), the Attachment, Overlash, and/or Wireless Installation shall immediately become subject to the Standards then in effect. Any amendment to the Standards shall apply to an Application submitted on or after the amendment becomes effective as per the schedule below:

   a) Tier 1 Revisions. CPS Energy shall publish Tier 1 Revisions forty-five (45) calendar days prior to their effective date.

   b) Tier 2 Revisions. CPS Energy shall publish Tier 2 Revisions ninety (90) calendar days prior to their effective date.

   CPS Energy will conduct quarterly workshops for the benefit of all Attaching Entities during the months of February, May, August, and November of each year. During these workshops CPS Energy and the Attaching Entities may discuss overall implementation of the Standards, including proposals for making

amendments to improve operations, procedures, and/or administration of CPS Energy's Pole Attachment Program. All proposals for either Tier 1 or Tier 2 Revisions to the Standards proposed by CPS Energy will be discussed at a quarterly workshop prior to publication.

2. **Process to Request Revisions to the Standards**. An Attaching Entity may formally request a revision to the Standards by:

   a) Completing the CPS Energy Pole Attachment Standards Revision Request (PASRR) form, a copy of which is provided in Appendix B and available for download at the CPS Energy Pole Attachment website, *www.cpsenergy.com/poleattachments*;

   b) Submitting the completed PASRR to CPS Energy;

   c) CPS Energy shall review a properly completed PASRR form received and will publish the PASRR on the Pole Attachment webpage for stakeholder comments for a minimum of thirty (30) calendar days.

   d) Attaching Entities and other interested stakeholders may submit comments, including draft substitute language within the thirty (30) calendar day comment period. Comments are to be submitted to CPS Energy using the PASRR Comment form, a copy provided in Appendix B and available for download on the CPS Energy Pole Attachment website, *www.cpsenergy.com/poleattachments*;

   e) Within thirty (30) calendar days following the end of the comment period, CPS Energy will publish its rationale and decision to accept, modify, or reject the PASRR either in-part or in-whole. CPS Energy will discuss its decision regarding the PASRR at the next scheduled quarterly workshop as described in Section II.G.1. CPS Energy reserves the right to extend the time period for stakeholder comments or the period to respond to stakeholder comments. In the event of such extension, CPS Energy will notify stakeholders by posting such notice of extension on the Pole Attachment website, *www.cpsenergy.com/poleattachments*.

H. Scope of Standards

1. **Grant of Permit.** The issuance of a Permit by CPS Energy authorizing the placement of an Attachment, Overlash, and/or Wireless Installation on a Pole or Streetlight Pole, pursuant to the provisions of these Standards, will operate to grant the Attaching Entity a revocable, nonexclusive license to install and maintain the Attachment, Overlash, and/or Wireless Installation on a specific Pole or Streetlight Pole, or set of Poles in the case of Mid-span Installation. The grant of a Permit entitles the Attaching Entity to the quiet enjoyment of its Attachments, Overlash, and/or Wireless Installation subject to all requirements of these Standards, including the procedures for the transfer or relocation of such Attachment, Overlash, and/or Wireless Installation.

2. **Parties Duties and Obligations under Standards.** These Standards set out the duties and obligations of CPS Energy and an Attaching Entity regarding the processing of an Application, issuance of a Permit, compliance with Applicable Engineering Standards, and administration of an Attachment, Overlashing, and/or Wireless Installation on a Pole or Streetlight Pole during the entire lifecycle of the Attachment, Overlashing, and/or Wireless Installation.

3. **Permit Issuance Conditions.** CPS Energy will issue a Permit to an Attaching Entity when there is sufficient Capacity to accommodate the requested Attachment and/or Wireless Installation or when pole loading conditions would not prohibit an Overlashing, and the corresponding Application complies with all Applicable Engineering Standards. CPS Energy may deny a Permit on a nondiscriminatory basis where there is insufficient Capacity or for reasons of safety, reliability, or as set forth in the Applicable Engineering Standards. CPS Energy shall provide the specific nondiscriminatory reasons for denial of an Application in writing with the rejected Application.

4. **No Interest in Property.** No use, however lengthy, of any CPS Energy Facilities, and no payment of any fees or charges required under these Standards, shall create or vest in an Attaching Entity any easement or other ownership or property right of any nature in any portion of such CPS Energy Facilities.

5. **Non-Exclusivity.** A Permit granted to an Attaching Entity under these Standards is non-exclusive and shall have no effect or take legal precedence over any Permit,

rights, or other privileges granted by CPS Energy to any other entity to use a CPS Energy Pole, Streetlight Pole, or other CPS Energy Facilities.

a) No Attaching Entity is entitled to reserve or schedule space on any Pole or Streetlight Pole, other than pole space for which a Permit has been granted.

b) An approved Permit is subject at all times to CPS Energy's right to provide core electric utility services, including the provision of all internal communications essential to the proper operations of such core electric utility services, using its Poles and Streetlight Poles.

c) The issuance of a Permit by CPS Energy grants only a license and no possessory interest to a specific Pole or Streetlight Pole, or to any space on such pole.

6. **CPS Energy's Rights over Poles.** The granting of a Permit does not in any way limit CPS Energy's right to locate, install, operate, maintain, relocate and/or remove its Poles and Streetlight Poles in the manner and at the time that will best enable it to fulfill its core electric and customer service requirements. CPS Energy reserves to itself the right to maintain CPS Energy Poles, Streetlight Poles, and other CPS Energy Facilities and to operate its facilities thereon in such manner as shall enable CPS Energy to fulfill its own electric service, lighting, maintenance, and customer service obligations and requirements.

7. **Restoration of CPS Energy Service.** CPS Energy's service restoration requirements shall take precedence over any and all work operations of any Attaching Entity on CPS Energy's Poles and Streetlight Poles. CPS Energy may relocate, replace, or remove an Attaching Entity's Attachments, Overlashings, and/or Wireless Installations, transfer them to substituted poles or perform any other work in connection with such Attachments, Overlashings, and/or Wireless Installations that CPS Energy deems necessary in order to safely and efficiently restore electrical service. CPS Energy shall not be liable to an Attaching Entity for any actions CPS Energy takes pursuant to this Section II.J.7. The affected Attaching Entity shall reimburse CPS Energy for the expenses that CPS Energy incurs relating to such work within forty-five (45) calendar days of the date CPS Energy issues an invoice for such work.

8. **Permitted Uses.** All Attaching Entities shall be permitted to use an approved Attachment or Overlash only for the purpose of providing Communications

Services. Wireless Installations shall only be used for the provision of Wireless Services. An Attaching Entity is not permitted to install an Attachment, Overlash, and/or Wireless Installation on behalf of any other party, sublease an Attachment, Overlash, and/or Wireless Installation to any other party, or Overlash Communications Facilities or install any Wireless Installation devices belonging to a third-party, regardless of whether the third-party is an Affiliate of an Attaching Entity, unless both the Attaching Entity and the third party have registered and executed a Pole Attachment and/or Wireless Installation Agreement with CPS Energy. Specifically, Infrastructure Providers are required to identify their Infrastructure Provider Sublicensees in compliance with Section II.B.1 and such sublicensees shall be required to execute their own Wireless Installation Agreement. Any use of an Attachment, Overlashing, and/or Wireless Installation other than as specified herein, shall be considered an Unauthorized Attachment or Unauthorized Wireless Installation subjecting the non-compliant Attaching Entity to enforcement action by CPS Energy, including:

a) Suspension of the processing of any further Applications submitted by the Attaching Entity pending resolution of the unauthorized use;

b) Revocation of previously granted Permits; and

c) Contractual claims under the Pole Attachment and/or Wireless Installation Agreement, as appropriate.

9. **Expansion of Capacity.** CPS Energy will expand Pole Capacity, at an Attaching Entity's expense, when necessary to accommodate an additional Attachment and/or Wireless Installation approved pursuant to the issuance of a Permit, and when consistent with local governmental land use requirements of general applicability and the Applicable Engineering Standards. Notwithstanding the foregoing sentence, CPS Energy is under no obligation to install, retain, extend, or maintain any Pole or Streetlight Pole for the benefit of an Attaching Entity when such pole or system of poles is not needed for CPS Energy's core electric or customer service requirements.

10. **Reserved Capacity.** At the time that CPS Energy receives an Application, CPS Energy, to the extent information is known at that time by CPS Energy, may communicate to the requesting Attaching Entity, CPS Energy's obligation to reserve space on a Pole or Streetlight Pole as Reserved Capacity for its own future use in accordance with a *bona fide* electric system expansion or improvement plan

that reasonably and specifically projects a need for that space for the provision of its core electric utility or lighting services, including any and all associated internal communications. Reserved Capacity shall be made available for use by an Attaching Entity consistent with these Standards and this Section II.H.10 until CPS Energy has a need for such Reserved Capacity.

a) CPS Energy may reclaim the Reserved Capacity if required for CPS Energy's use at such time by giving the Attaching Entity at least ninety (90) calendar days' advance notice. CPS Energy shall give the Attaching Entity the option to remove its Attachment and/or Wireless Installation from the affected Pole or Streetlight Pole or to pay for the cost of any Make-Ready Work needed to expand Capacity so that the Attaching Entity may maintain its Attachment and/or Wireless Installation on the affected Pole or Streetlight Pole as provided in Section II.H.10.b below.

b) CPS Energy may require an Attaching Entity to remove its Attachment and/or Wireless Installation from the affected Pole or Streetlight Pole if the Attaching Entity does not opt to pay for the cost of Make-Ready Work needed to expand Capacity within forty-five (45) calendar days of CPS Energy issuing notice that CPS Energy requires use of the Reserved Capacity. CPS Energy may remove the Attachment and/or Wireless Installation if the Attaching Entity fails to remove it from the affected Pole or Streetlight Pole within ninety (90) calendar days of CPS Energy issuing notice that CPS Energy requires use of the Reserved Capacity. CPS Energy shall invoice the affected Attaching Entity for the actual cost that CPS Energy incurs for such removal, and the Attaching Entity shall pay such invoice no later than forty-five (45) calendar days following issuance of invoice.

c) If CPS Energy reclaims Reserved Capacity for which an Attaching Entity has received a Permit and paid for Make-Ready Work, where the Make-Ready Work consisted of relocating CPS Energy's Neutral on the existing Pole to allow the Attaching Entity's use of Reserved Capacity, but the installation of the Attachment and/or Wireless Installation is not complete, CPS Energy shall refund all payments made by the Attaching Entity for the Application Fee and Make-Ready Work on the affected pole.

11. **<u>Authorization for Use of One-Touch Transfer Process.</u>** All Attaching Entities with Attachments, Overlashings, and/or Wireless Installations on CPS Energy Poles or Streetlight Poles shall be subject to a Simple Transfer and/or

rearrangement of their Attachments, Overlashings, and/or Wireless Installations pursuant to the One-Touch Transfer Process described in Section IV.B.5 and Section V.B.5, provided that any such transfer or rearrangement is consistent with these Standards including all Applicable Engineering Standards. An Attaching Entity is entitled to utilize the One-Touch Transfer Process in installing its Attachments, Overlashings, and/or Wireless Installations, provided that the requirements of Section IV.B.5, Section IV.B.6, Section V.B.5, and Section V.B.6 are followed.

I. Fees and Charges

1. **General.** All Attaching Entities shall be subject to the CPS Energy Schedule of Pole Attachment Rates, Fees, and Charges as specified in Appendix H, as may be amended, and shall comply with the terms and conditions specified herein.

a) Wherever CPS Energy is required to perform any work related to the Pole Attachment Program on behalf of an Attaching Entity, CPS Energy, at its sole discretion, may utilize its employees or contractors, or any combination of the two, to perform such work. Invoices submitted directly to an Attaching Entity from a CPS Energy contractor shall be treated as if the invoice was issued from CPS Energy pursuant to these Standards.

b) Wherever an Attaching Entity is required to pay for such work done or contracted by CPS Energy, the charge for such work shall include all reasonable material, labor, travel, engineering, administrative, and applicable overhead costs, other than those costs compensated by payment of the applicable Application Fee, the annual Attachment Connection Fee, and the Wireless Installation Fee.

c) No rates, fees, and/or charges specified in Appendix H shall be refunded on account of any surrender of a Permit.

d) All Attaching Entities shall pay CPS Energy or its contractor in accordance with the terms of this Section II.I and Appendix H.

e) If CPS Energy or its contractor does not receive payment from an Attaching Entity for any amounts owed within forty-five (45) calendar days after it becomes due, the Attaching Entity shall pay in addition to the initial amount, interest to CPS Energy at the rate of one and 17/100 Percent (1.17%) simple interest per month on the amount due beginning from the first of the month

following the forty-five (45) calendar days until the payment is made. Should payment not be received within sixty (60) days following the due date, CPS Energy shall suspend the processing of the Attaching Entity's Applications until payment is paid in full.

f) Excluding the annual Attachment Connection Fee and/or the annual Wireless Installation Fee, should an Attaching Entity wish to dispute an invoice from either CPS Energy or its contractors; the Attaching Entity shall within fifteen (15) days of receipt of the invoice provide CPS Energy written notice of its intention to dispute the invoice. This notice shall include:

(i) a copy of the invoice being disputed;

(ii) a detailed description of the disputed amounts;

(iii) all documentation to support the Attaching Entity's claim of dispute; and

(iv) any legal basis for the claim of dispute.

Within ten (10) days of receipt of the written notice of dispute, CPS Energy will arrange a meeting or teleconference with the Attaching Entity to begin discussions regarding the dispute in accordance with the conflict resolution provisions provided in Section II.L.1.

The invocation of a dispute by an Attaching Entity does not relieve the Attaching Entity from timely payment of the invoice pursuant to Section II.I.1.h. Should CPS Energy and the Attaching Entity reach agreement on an amount less than the invoiced amount under dispute and paid under protest or dispute, CPS Energy, or its contractor, shall either reimburse or provide future credit to the Attaching Entity in accordance with the agreement of the parties provisions.

g) Nonpayment of a non-disputed amount invoiced by CPS Energy or its contractor and due beyond ninety (90) days shall subject an Attaching Entity to escalating enforcement action, including but not limited to:

(i) Suspension of the processing of any further Applications submitted by the non-compliant Attaching Entity pending receipt of payment;

(ii) Potential contractual claims; and

(iii) Termination of the Pole Attachment and/or Wireless Installation Agreement, as appropriate.

h) If an Attaching Entity pays any amount under protest or dispute, such Attaching Entity shall make full payment consistent with the timeframe required by these Standards and shall designate payment as "PAID UNDER PROTEST." Failure to contest or otherwise dispute an invoice within sixty (60) calendar days of receipt shall be deemed to be acceptance by the Attaching Entity.

i) Failure to pay an invoice for the annual Attachment Connection Fee and/or the annual Wireless Installation Fee in full based on any allegation that CPS Energy has improperly applied or calculated the Attachment Rate or the Wireless Rate shall not constitute a legitimate basis for disputing any invoice (other than arithmetic errors that should be brought to CPS Energy's immediate attention). The proper forum for making such allegations is a regulatory agency or court of competent jurisdiction.

2. <u>Application Fee[5] and Make-Ready Engineering Review</u>.

a) Each Attaching Entity shall be invoiced an Application Fee to compensate CPS Energy for the cost of administrative and other work required to manage the Application process not directly reimbursed by an Attaching Entity through other Make-Ready Work charges or otherwise covered by the annual Attachment Connection Fee and/or the Wireless Installation Fee. The appropriate Application Fee, set forth in Appendix H, will be invoiced for the month of in which the Application was received by CPS Energy. If the Attaching Entity fails to pay the Application Fee within forty-five (45) calendar days following issuance of the invoice, the Application shall be deemed incomplete. As a result, CPS Energy will (i) discontinue the processing of the Application and any subsequent Application(s); and/or (ii) revoke the Permit(s) issued under the Application determined to be incomplete. Upon full payment, CPS Energy will resume processing Applications and restore any Permits which may have been revoked under this Section II.I.2.a.

b) An Attaching Entity shall reimburse CPS Energy or its contractor for its actual costs to complete the Application process, including the Make-Ready Engineering review, described in Section IV and Section V. CPS Energy or its contractor shall invoice each Attaching Entity for the work completed in

[5] CPS Energy will discontinue the requirement of an Application Fee on wire Attachments effective on January 1, 2017.

processing the Attaching Entity's Applications on a monthly basis. If the Attaching Entity fails to pay the Make-Ready Engineering costs within forty-five (45) calendar days following issuance of the invoice; CPS Energy will (i) suspend processing of the Attaching Entity's pending Applications and any subsequent Applications; and/or (ii) revoke the Permits issued under the Applications for which Make-Ready Engineering review charges have not been paid. Upon full payment, CPS Energy will resume processing and restore any Permits which may have been revoked under this Section II.I.2.b.

c) In the event that an Application is submitted by an Attaching Entity and then is subsequently cancelled, the Attaching Entity shall forfeit the Application Fee submitted with the cancelled Application. The Attaching Entity shall also reimburse CPS Energy or its contractor for the costs incurred up to the date of cancellation. Should CPS Energy cancel the Application pursuant to its rights under these Standards, CPS Energy will reimburse the Application Fee to the Attaching Entity.

3. **Advance Payment for Make-Ready Electrical Construction.** Where Make-Ready Electrical Construction is required, the Attaching Entity is required to make advance payment for the Make-Ready Electrical Construction pursuant to Section IV.B.3.b and Section IV.B.4.a. All required Make-Ready Electrical Construction must be completed before an Attaching Entity shall install any Attachments, Overlashings, and/or Wireless Installations. CPS Energy shall provide an invoice and request authorization for the Make-Ready Electrical Construction by submitting to the Attaching Entity the completed CPS Energy Authorization for Make-Ready Work form, provided in Appendix B. The estimate provided in the CPS Energy Authorization for Make-Ready Work form shall be valid for fifteen (15) days of issuance. Should the Attaching Entity not indicate its acceptance within the fifteen (15) day time-frame, the Application shall be deemed cancelled. If approved by the Attaching Entity, the Attaching Entity shall pay CPS Energy pursuant to the terms of CPS Energy Authorization for Make-Ready Work and Section II.I.1. CPS Energy will not schedule or release to construction any Make-Ready Electrical Construction work on behalf of an Attaching Entity until the advance payment is received in full by CPS Energy.

a) As provided in this Section II.I.3, CPS Energy will require advance payment of estimated expenses for Make-Ready Electrical Construction. CPS Energy shall perform a true up of costs for work orders closed with each quarter

(January-March, April-June, July-September, and October-December) and the following will apply:

(i) To the extent that the actual costs of the work order exceeds the advance payments of estimated expenses, the Attaching Entity shall pay CPS Energy for the net difference in costs; or

(ii) To the extent that the actual costs of the work order is less than estimated costs, CPS Energy will refund to the Attaching Entity the net difference in costs.

(iii) In either event identified in Section II.I.3.a.i or Section II.I.3.a.ii above, CPS Energy shall either invoice or refund the appropriate costs to the Attaching Entity within sixty (60) days following the close of each quarter pursuant to this Section II.I.3.a.

b) For any actual costs incurred by CPS Energy that are not reflected in the work order costs for any reason, an estimated cost will be determined by CPS Energy and added to the actual work order costs in order to account for these costs during the true up process.

4. **Annual Attachment Connection Fee.** CPS Energy shall invoice the annual Attachment Connection Fee to each Attaching Entity having permitted wire Attachments no later than December 31 of each year. The invoice shall set forth the total number of pole feet utilized by Attachments on CPS Energy Poles on which the Attaching Entity was issued and/or holds corresponding Permits for Attachments as of December 1 of the then-current rental year multiplied by the Attachment Rate. The Attaching Entity shall pay the invoice for the Attachment Connection Fee as specified in Section II.I.1. Failure to make timely payment of invoice in full will result in the suspension of processing any further Applications for Attachments submitted by the Attaching Entity pending receipt of payment.

a) The Attachment Rate shall be calculated by CPS Energy on an annual basis pursuant to applicable laws and regulations.

b) CPS Energy will make available on its Pole Attachment webpage, *www.cpsenergy.com/poleattachments*, relevant information and inputs required for calculating the Attachment Rate.

5. **Annual Wireless Installation Fee**. CPS Energy shall invoice the annual Wireless Installation Fee to each Attaching Entity having permitted Wireless Installations no

later than December 31 of each year. The invoice shall set forth the total number of Wireless Installations and pole feet utilized for which the Attaching Entity was issued corresponding Permits as of December 1 of the then current year multiplied by the Wireless Rate. The Attaching Entity shall pay the annual invoice for the Wireless Installation Fee as specified in Section II.1.1. Failure to make timely payment of the invoice in full will result in the suspension of processing any further Applications for Wireless Installations submitted by the Attaching Entity pending receipt of payment.

a) The Wireless Rate shall be calculated by CPS Energy on an annual basis.

b) CPS Energy will make available on its Pole Attachment webpage, *www.cpsenergy.com/poleattachments*, relevant information and inputs required for calculating the Wireless Rate.

6. Unauthorized Charges. The installation of Unauthorized Attachments or Unauthorized Wireless Installations poses an increased risk to CPS Energy personnel, the public, and legitimate Attachments, Overlashings, and Wireless Installations of other Attaching Entities. CPS Energy shall issue a Notice of Unauthorized Attachments or Unauthorized Wireless Installations, a copy of which is provided in Appendix B, promptly upon discovery to the Attaching Entity that owns such Attachments or Wireless Installations pursuant to Section III.E. Such notice shall include the specific location of the Unauthorized Attachment or Wireless Installation (including CPS Energy Pole number) and the type of Attachment, Overlashing, or Wireless Installation.

a) An Attaching Entity may dispute CPS Energy's determination by providing the Attachment's or Wireless Installation's Permit or approved Application from CPS Energy within forty-five (45) calendar days of CPS Energy's issuance of notice.

b) CPS Energy will invoice for any Unauthorized Attachment or Unauthorized Wireless Installation identified by the terms and conditions of this Section II.I.6, Section III.E, and Appendix H. Any Unauthorized Attachment Charges or Unauthorized Wireless Installation Charges shall be paid within forty-five (45) calendar days upon issuance of invoice.

c) If the Attaching Entity or Wireless Installation owner or operator fails to pay the Unauthorized Attachment Charges or Unauthorized Wireless Installation Charges within forty-five (45) calendar days following issuance of the

invoice, CPS Energy shall thereon immediately discontinue the processing of any pending and subsequent Applications until the invoice is paid in full, and may pursue such other and further enforcement remedies as it may have available.

7. **Other**. CPS Energy may invoice other fees or penalties, described in Appendix H, pursuant to the Pole Attachment and/or Wireless Installation Agreement, and these Standards.

J. Claims

1. Claims for Damages to CPS Energy Facilities

a) The CPS Energy Claims Department shall be responsible for investigating and resolving claims for damages to CPS Energy Facilities caused by a third-party, including an Attaching Entity, or its contractors, subcontractors, and agents.

b) An Attaching Entity shall be responsible for immediately notifying CPS Energy of any damages to CPS Energy Facilities resulting from the Attaching Entity's construction activities, including the activities of its contractors, subcontractors, or agents.

c) In the event CPS Energy Facilities are damaged by an Attaching Entity, or its contractors, subcontractors, or agents, the CPS Energy Claims Department will tender to the Attaching Entity at fault a third-party claim for damages.

d) The Attaching Entity is responsible for making CPS Energy whole and for reimbursing all third-party claims associated with damages to CPS Energy Facilities resulting from the installation, operation, maintenance, transfer, relocation, removal, failure, or forceful detachment of an Attachment, Overlash, and/or Wireless Installation whether caused by the Attaching Entity, its contractors, subcontractors, and agents, or by any unaffiliated third-party.

2. Upon Receipt of Claim.

a) Upon receiving notification of damages to CPS Energy Facilities, whether by the Attaching Entity or from another source, a claims file will be opened and a CPS Energy claims representative will be assigned to the file. All CPS

Energy internal claims representatives are licensed by the Texas Department of Insurance.

b) The Attaching Entity will be timely notified of the claim for damages to CPS Energy Facilities and will be advised that an internal investigation has commenced, and will be provided with a preliminary assessment of the damages to CPS Energy Facilities.

c) An internal investigation will be completed by CPS Energy to determine liability for all claims for damages to CPS Energy Facilities. Utilizing industry standard claims software to create a record of the claims process, the assigned adjuster will investigate the claim and gather relevant facts and documentation. All of the gathered information will be compiled by the licensed adjuster and analyzed to determine liability and the total amount of damages.

d) Once a determination of liability is made regarding the claims for damage to CPS Energy Facilities, a claims representative will notify the Attaching Entity in writing and provide a Collection Notice Letter stating the amount of damages owed to CPS Energy, and the Attaching Entity will have an opportunity to respond.

3. <u>Dispute of Claim.</u>

a) In the event liability is disputed for a claim of damages to CPS Energy Facilities, the Attaching Entity must submit a Notice of Dispute Form, a copy of which is provided as Appendix C, to the CPS Energy Claims Department within five (5) business days of receiving CPS Energy's tender explaining the reason for the disputing liability and providing documentary support for the dispute. Dispute of a claim shall not be capricious nor will assumption of responsibility be unreasonably withheld.

b) An Attaching Entity may conduct its own independent investigation of any claims for damage to CPS Energy Facilities. CPS Energy shall cooperate with the Attaching Entity's claims investigator. CPS Energy shall consider the findings of the Attaching Entity's investigation provided that the investigation is completed within forty-five (45) calendar days of the Attaching Entity submitting to CPS Energy a Notice of Dispute Form.

c) The CPS Energy Claims Department may assign the dispute to an internal independent review panel which will provide a de novo review of the claim

file including, the Notice of Dispute Form, and any supporting documentation submitted by the Attaching Entity. CPS Energy will notify the Attaching Entity of the final determination of liability within thirty (30) calendar days.

4. <u>Payment of Claims.</u>

a) In the event the final determination is one of liability on the part of the Attaching Entity, CPS Energy will send a Collections Notice Letter. Upon receipt of the Collections Notice Letter, the Attaching Entity must remit payment with twenty (20) calendar days to the following address:

CPS Energy Claims Department
Mail Drop 110902
PO Box 1771
San Antonio, Texas 78296

b) The correspondence accompanying payment must include the CPS Energy claims number associated with the file.

5. <u>Failure to Pay Claims</u>.

a) Failure to timely pay a non-disputed claim or otherwise follow these claim procedures shall constitute violation of these Standards and will result in the suspension of any existing Applications and rejection of any future Applications submitted by the Attaching Entity until such time as the claim has been satisfied and closed.

b) If a non-disputed payment is not timely received, CPS Energy will seek reimbursement under the Attaching Entity's performance bond.

c) CPS Energy reserves the right to refer collection on any unpaid outstanding claims to a collections agency and/or legal counsel.

K. Compliance with Pole Attachment Standards & CPS Energy Enforcement

1. <u>Expectation of Compliance</u>. Pursuant to the Pole Attachment Agreement and/or Wireless Installation Agreement, as appropriate; each Attaching Entity shall fully comply with the terms and conditions set forth in these Standards as a condition to receive a Permit from CPS Energy.

2. **Enforcement of Standards**. Pursuant to either the Pole Attachment and/or Wireless Installation Agreement, as appropriate; CPS Energy reserves all rights available to CPS Energy under these Standards or said agreement to enforce compliance with these Standards in a non-discriminatory manner by all Attaching Entities. Further, CPS Energy will enforce these Standards in a non-discriminatory manner on any Attaching Entity regardless of the status of the Pole Attachment and/or Wireless Installation Agreement, as appropriate, with CPS Energy.

3. **Safety Violations & Safety Violation Assessment Charge**.

   a) If during an Inspection or otherwise, CPS Energy determines that one or more of an Attaching Entity's Attachments or Wireless Installations, or any part thereof, are installed, used, or maintained in such a manner as to create one or more Safety Violations; CPS Energy shall promptly notify the Attaching Entity in accordance with the provisions of Section II.B.2 by issuing a Notice of Safety Violation, a copy of which is provided in Appendix B. Attaching Entity shall correct the Safety Violation(s) as soon as possible, but no later than five (5) calendar days from CPS Energy's issuance of such notice.

   If following CPS Energy's verification the Safety Violation has not been cured within the five (5) calendar day period:

   (i) CPS Energy may correct said conditions. CPS Energy will attempt to notify the non-compliant Attaching Entity in writing prior to performing such work whenever practicable. Should CPS Energy determine the Safety Violation poses an Emergency, interferes with the performance of CPS Energy's service obligations, or poses an immediate threat to the physical integrity of CPS Energy Facilities; CPS Energy may perform such work and/or take such action as it deems necessary without first giving written notice to the Attaching Entity. As soon as practicable thereafter, CPS Energy will advise the Attaching Entity of the work performed or the action taken. The Attaching Entity shall be responsible for all costs incurred by CPS Energy in taking action pursuant to this Section II.K. CPS Energy will facilitate the resolution of responsibility for violations in the event that multiple Attaching Entities are on the same Pole.

(ii) Pursuant to Section II.K.3.a, CPS Energy will impose a ten percent (10%) surcharge on its costs of conducting any work to correct or remedy a Safety Violation.

b) Following the correction of the Safety Violation(s), CPS Energy shall issue a Notice of a Safety Violation Assessment Charge, the form of which is in Appendix B, to the Attaching Entity, as provided in Appendix H for each Safety Violation(s) noted.

c) The Attaching Entity may dispute responsibility for such Safety Violation Assessment Charge within fifteen (15) calendar days of CPS Energy's issuance of notice. CPS Energy and the Attaching Entity shall meet within fifteen (15) days of CPS Energy receiving the notice of dispute to review all relevant facts and work towards an agreement on the question of responsibility of the Safety Violation(s). CPS Energy will provide its determination of responsibility within ten (10) calendar days of the determination meeting. Should CPS Energy in its reasonable judgement determine the Attaching Entity was at fault, the Attaching Entity shall be responsible for the Safety Violation Assessment Charge. However, should CPS Energy in its reasonable judgement determine the Attaching Entity is not at fault; CPS Energy may in its discretion waive the Safety Violation Assessment Charge and investigate to determine the responsible party. Regardless of CPS Energy's determination as to the Safety Violation Assessment Charge, the Attaching Entity that owns the Attachment and/or Wireless Installation imposing the Safety Violation is required to remedy the Safety Violation within five (5) calendar days of CPS Energy's issuance of the Notice of Safety Violation form in accordance with Section II.K.3.a.

Should the Attaching Entity fail to dispute the Safety Violation Assessment Charge within fifteen (15) calendar days of CPS Energy issuing the Notice of Safety Violation Assessment Charge as required by this Section II.K.3.c, the Attaching Entity shall be required to pay the full amount of any Safety Violation Assessment Charges levied by CPS Energy within forty-five (45) calendar days from receipt of invoice. Failure to make timely payment shall result in the following enforcement measure:

(i) CPS Energy will immediately suspend or stop processing Applications submitted by the non-compliant Attaching Entity for future Permits until full payment is received by CPS Energy.

3. **Failure to Enforce.** Failure of CPS Energy to take action to enforce compliance with any of the terms and conditions of these Standards shall not constitute a waiver or relinquishment of any term or condition of these Standards, but the same shall be and remain at all times in full force and effect until terminated, in accordance with these Standards or the Pole Attachment and/or Wireless Installation Agreement, as appropriate.

L. Conflict Resolution

Notwithstanding the provisions of Section III.A.5 and Section III.A.6; conflicts, both informal and formal, identified between CPS Energy and an Attaching Entity arising from and/or related to technical interpretations and/or day-to-day administration of these Standards shall comply with this Section II.L.

1. **Informal Conflict Resolution.** Informal conflicts identified between an Attaching Entity and CPS Energy arising from and/or related to technical interpretations and/or day-to-day administration of these Standards shall comply with this Section II.L.1. Notice of an informal conflict shall be submitted via electronic mail to the CPS Energy representatives identified in Section II.L.1.a below. The party initiating the conflict notice shall (1) provide a specific detailed description of the conflict including any previous efforts to remedy the conflict, and (2) call for progressive management involvement in the resolution process. Both CPS Energy and the Attaching Entity shall use their best efforts to arrange personal meetings and/or telephone conferences as needed, at mutually convenient times and places at each of the following successive management levels, each of which will have a period of allotted time as specified below in which to attempt to resolve the conflict:

   a) Successive Management Levels (for CPS Energy).

      (i) First Level: Pole Attachment Representative (CPS Contractor) – 5 business days.

      (ii) Second Level: Manager, CPS Energy Pole Attachment Services – 10 business days.

      (iii) Third Level: Director, CPS Energy Distribution Engineering – 15 business days.

   b) The allotted time for the first-level of resolution process will begin on the next business day following the submission of the electronic mail of the

conflict by the submitting party. If a resolution is not achieved at any given management level at the end of their allotted time, then the allotted time for the negotiators at the next management level will begin on the next business day unless the parties agree otherwise to extend the allotted time.

c) If a resolution is reached, CPS Energy shall draft a letter agreement which outlines the basis of the disagreement, the steps taken to reach settlement, and the settlement provisions. Both CPS Energy and the Attaching Entity shall provide their affirmative support of the agreed resolution.

d) If a resolution is not achieved at the final management level within their allotted time at the operation level, then either party is directed to follow the Dispute Resolution process as defined in the Pole Attachment or Wireless Installation Agreement, as appropriate, for further escalation.

2. **Formal Process**. Where these Standards provide CPS Energy with the authority to determine whether an Attaching Entity or its Attachments or Wireless Installations are in violation of any Applicable Engineering Standard or of any provision of these Standards, CPS Energy shall provide the Attaching Entity with written notice of its investigation into such matters. Such notice shall be provided to the Attaching Entity's representative identified in its Attaching Entity Registration & Annual Reporting Form as required in Section II.B and shall be no fewer than thirty (30) calendar days prior to the day CPS Energy intends to make a final determination, and shall include all information in CPS Energy's possession or control relevant to its investigation and determination. In cases of Emergency or in other cases in which the notice time periods set forth in this Section II.L.2 are not feasible, CPS Energy shall endeavor to provide the Attaching Entity with as much advance notice of its investigation as possible. The Attaching Entity may provide additional information to CPS Energy relevant to the determination within fifteen (15) calendar days of CPS Energy issuing written notice of its investigation. In the event Attaching Entity provides information that indicates that CPS Energy incorrectly determined that the Attaching Entity was in violation of any Applicable Engineering Standard or any provision of these Standards, CPS Energy shall promptly restore the Attaching Entity to the position it held prior to the determination.

M. Liability Insurance

CPS Energy shall require the Liability Insurance as described in the Pole Attachment Agreement for wired Attachments or Wireless Installation Agreement for Wireless Installations, as appropriate, in addition to the requirements of Section IV.D.4.

N. Indemnification

CPS Energy shall require the Indemnification as described in the Pole Attachment Agreement for wired Attachments or Wireless Installation Agreement for Wireless Installations, as appropriate, in addition to those indemnification provisions provided in these Standards.

O. Performance Bond

CPS Energy shall require Attaching Entity to secure and maintain a Performance Bond as described in the Pole Attachment Agreement for wired Attachments or Wireless Installation Agreement for Wireless Installations, as appropriate.

III. GENERAL TECHNICAL PROVISIONS

A. General Design & Construction Standards & Specifications

1. **Professional Engineer.** An Attaching Entity shall utilize a licensed Professional Engineer to undertake and complete the engineering design and Pole Loading Analysis (PLA) calculations required in completing an Application for Permit as described in Section IV and Section V. For the purposes of these Standards, an Engineer shall include engineering employees or contractors with a valid state of Texas professional engineering license in good standing. All Engineers considered by the Attaching Entity must be approved by CPS Energy before undertaking any engineering work on behalf of the Attaching Entity. CPS Energy approval shall not be unreasonably withheld, conditioned, or delayed. CPS Energy shall maintain a list of pre-approved Engineers on its website.

   The Attaching Entity's Engineer shall adhere to all Applicable Engineering Standards and requirements of CPS Energy. Failure to comply with such standards and requirements may result in CPS Energy retracting its approval of the Engineer. If CPS Energy reasonably determines that non-compliance by the Engineer resulted in substandard work, the Attaching Entity shall be required to remedy all work conducted by the Engineer that does not comply with the Applicable Engineering Standards and any other requirements of CPS Energy at the sole expense of the Attaching Entity.

2. **Contractors.** All work, with the exception of One-Touch Simple Transfers, performed on CPS Energy Facilities on behalf of an Attaching Entity pursuant to a Permit shall be done by its own employees, contractors, or subcontractors approved by CPS Energy, which approval shall not be unreasonably withheld, delayed, or conditioned. One-Touch Simple Transfers shall only be undertaken by contractors certified and approved by CPS Energy for such work pursuant to Section IV.B.5.b. All employees, contractors, and subcontractors utilized by the Attaching Entity shall be subject to the same standards of conduct and behavior as CPS Energy applies to its own contractors and employees, as set forth in Appendix M and Appendix N, which CPS Energy may reasonably revise upon thirty (30) calendar days' notice. Failure of any employee, contractor, or subcontractor of the Attaching Entity to adhere to and comply with such CPS Energy standards and requirements

may result in CPS Energy retracting its approval of the employee, contractor, or subcontractor to perform work of any kind on CPS Energy Facilities.

The Attaching Entity shall bear full responsibility for ensuring its employees, agents, contractors, and subcontractors are in full compliance with the requirements of these Standards. An Attaching Entity may be required to remedy any and all work, conducted by either its employees, contractor, or subcontractor that does not comply with the Applicable Engineering Standards and other construction standards and requirements of CPS Energy. CPS Energy reserves the right to halt all work undertaken by the Attaching Entity or its contractors/subcontractors that in CPS Energy's sole discretion is deemed unsafe or undertaken contrary to CPS Energy standards and requirements.

3. **Right to Review.** CPS Energy contemplates relying upon the Attaching Entity's Pre-Construction Survey and other engineering/field evaluation reports developed and relied upon in connection with any Application submitted be the Attaching Entity. Nonetheless, CPS Energy reserves the right to perform its own (either by CPS Energy employees or contractors) engineering and field evaluation or verification as appropriate or necessary. The costs for CPS Energy to undertake such additional engineering and field evaluation shall be paid by the Attaching Entity pursuant to Section IV, Section V, and Section II.I.2.

4. **Installation/Maintenance of Communications Facilities.** All Attaching Entities shall be responsible for the installation and maintenance of their Communications Facilities and/or Wireless Installations in accordance with the requirements and specifications set out in these Standards, including the Appendices. An Attaching Entity shall at all times and at its own expense make and maintain its Attachments, Overlashings, and Wireless Installations in a safe and workmanlike manner, and keep them in good repair and condition in accordance with all Applicable Engineering Standards.

Notwithstanding the foregoing; Attachments, Overlashings, and Wireless Installations which complied with the Applicable Engineering Standards at the time they were originally installed may be operated in place until such time that such facilities are subject to modification, upgrade, rebuild, repair, transfer, relocation, or other such changes at which time, these facilities will be required to comply with the then current Applicable Engineering Standards.

a) Protective Equipment. The Attaching Entity, its employees and contractors, shall install and utilize adequate protective equipment to ensure the safety of people and facilities. The Attaching Entity shall install, at its own expense, protective devices designed to handle the voltage and current impressed on its Communications Facilities or Wireless Installations in the event of a contact or due to close proximity with a supply conductor(s) or other energized equipment. CPS Energy shall not be liable for any actual or consequential damages to the Attaching Entity's Communication Facilities, Wireless Installations, or Attaching Entity's customers' facilities resulting from such contact or proximity with CPS Energy's supply conductor(s) or other energized equipment.

5. Conflicts within the Standards. If there exists a difference or conflict in the Applicable Engineering Standards, the following rules will apply:

a) if one Applicable Engineering Standard is more stringent than the other, the more stringent shall apply;

b) if one of the conflicting specifications, regulations, or practices is not more stringent than the other, the specification, regulation, or practice of the National Electrical Safety Code (NESC) will apply; or

c) if the conflict cannot be resolved under the first two rules, CPS Energy will determine in good faith which specification, regulation, or practice shall apply, with safety concerns given the highest priority in such determination, subject to the conflict resolution procedures outlined in Section II.L.1.

An Attaching Entity shall not be penalized in any manner for non-compliance with conflicting standards that are resolved pursuant to subpart (c) of this Section III.A.5 provided the Attaching Entity identifies the potential conflict to CPS Energy in writing at least seven (7) days before actual construction of the Attachment, Overlash,/or Wireless Installation began.

6. Request Waiver. An Attaching Entity may request a waiver of specific items of the Applicable Engineering Standards by submitting a properly completed CPS Energy Request for Waiver of Applicable Engineering Standards form (Waiver Request), a copy of which is in Appendix B and available on the CPS Energy Pole Attachment website, *www.cpsenergy.com/poleattachments*, either before or at the time of Application submission. The request must specifically identify the Applicable Engineering Standard requested to be waived, justification for

requesting the granting of the waiver, and the proposed solution as a result of the waiver. CPS Energy shall notify the Attaching Entity in writing within seven (7) calendar days of receiving a properly completed Waiver Request form. CPS Energy will not grant any waiver which in the sole opinion of CPS Energy will result in a violation of the NESC or other applicable federal, state, or local law, regulation, or ordinance.

7. **Tagging.** Each Attaching Entity shall properly install identification Tags on all of its Attachments, Overlashings, and/or Wireless Installations as specified in Appendix K and/or applicable federal, state, local, or industry regulations in effect at the time of installation. Failure of an Attaching Entity to provide proper tagging of its new Attachments, Overlashings, or Wireless Installations or failure to undertake in good faith its Tagging Plan shall be considered a violation of the Applicable Engineering Standards.

a) Should CPS Energy discover that an Attaching Entity has Attachments, Overlashings, or Wireless Installations that are untagged or incorrectly tagged[6], excluding Service Drops, exceeding five percent (5%) of its total Attachments or Wireless Installations respectively, the Attaching Entity, at CPS Energy's request, shall within two (2) months, provide to CPS Energy a written plan (Tagging Plan) to Tag the Attachments, Overlashings, or Wireless Installations. The Tagging Plan shall identify an estimated schedule to complete the tagging of all untagged or incorrectly tagged Attachments, Overlashings, or Wireless Installations within an eighteen (18) month period for Attachments and/or Overlashings and within two (2) months for Wireless Installations respectively. The Attaching Entity and CPS Energy shall meet every two months during the timeframe outlined in the Tagging Plan to determine Attaching Entity's compliance with its Tagging Plan. CPS Energy reserves the right to conduct field audits to assess the Attaching Entity's compliance with its Tagging Plan.

b) In the event any Attachment, Overlash, or Wireless Installation is untagged or incorrectly tagged and CPS Energy must determine the owner's identity in order to address the repair or maintenance of a CPS Energy Facility where CPS Energy cannot undertake such repair or maintenance absent the removal

[6] As to the current ownership of the Attachment, Overlash, or Wireless Installation.

or transfer of such Attachment, Overlash, or Wireless Installation; CPS Energy will undertake the following protocol:

(i) A thirty (30) minute reasonable effort to determine the owner of the untagged Attachment, Overlash or Wireless Installation at no cost to the Attaching Entity; then

(ii) Provided the initial thirty (30) minute effort is unsuccessful, CPS Energy shall continue with its search until ownership is determined. CPS Energy shall bill and the non-compliant Attaching Entity shall pay CPS Energy at the Tracing Line Ownership rate set forth at Appendix H for the time required to determine the Attachment, Overlash, or Wireless Installation ownership.

8. **Physical Interference with CPS Energy Facilities**. An Attaching Entity shall not allow its Communications Facilities or Wireless Installations to impede, impair or interfere with the installation, placement, and/or operation of any CPS Energy Facilities. An Attaching Entity whose Communications Facilities, Wireless Installations, or any part thereof; impede, impair or interfere with any CPS Energy Facilities shall correct such condition within fifteen (15) calendar days from receipt of written notice of such impairment from CPS Energy. Failure to timely correct such condition will result in CPS Energy, at its option, taking all necessary steps to correct said condition at Attaching Entity's expense plus ten-percent (10%). CPS Energy will attempt to notify the non-compliant Attaching Entity in writing prior to performing such work whenever practicable.

If an Attaching Entity continues to allow its Communications Facilities or Wireless Installations to impede, impair, or interfere with the operation of any CPS Energy Facilities after the initial fifteen (15) calendar day correction period, the Attaching Entity shall be subject to enforcement action, including but not limited to:

(i) Suspension of the processing any further Applications, by the Attaching Entity, pending resolution of such interference; and

(ii) Potential contractual claims.

An Attaching Entity shall not be responsible for physical interference with future installations by other Attaching Entities, provided that the Attaching Entity's prior Attachments are duly permitted by CPS Energy and comply with all Applicable Engineering Standards and the requirements of these Standards at the time of the

initial installation, unless otherwise required by applicable federal, state, or local laws. Where CPS Energy needs to add to or modify CPS Energy Facilities in a case other than remedying a non-compliant condition caused by an Attaching Entity, and where that action would require the replacement of a Pole or Streetlight Pole, CPS Energy and all affected Attaching Entities shall be responsible for their own cost of transferring their Attachments, Overlashing, or Wireless Installations. CPS Energy will be responsible for the cost of the pole replacement.

a) No Wireless Installations within Certain Distance from CPS Energy Substations. No Applications will be approved for a Wireless Installation on CPS Energy Poles or Streetlight Poles within three-hundred feet (300') of any CPS Energy Substation's outer fence.

9. Performance Interference to Attaching Entity's Customer. To the extent an Attaching Entity identifies any interference with its Communications Services impacting its customers that may or may not be related to CPS Energy Facilities, the Attaching Entity shall not identify CPS Energy to its customers as the source of such interference absent a test report verifying the source and prior notice to CPS Energy of the report's findings. The Attaching Entity shall cooperate with CPS Energy to investigate the source of any such signal interference and shall at CPS Energy's request conduct a test, at the Attaching Entity's expense, verifying the source of such interference. The test equipment used for verifying the source of interference must be calibrated to the standards provided by the National Institute of Standards and Technology or any similar, mutually agreeable standards organization. In the event such testing provides conclusive evidence that CPS Energy Facilities are the source of such interference, CPS Energy shall reimburse the Attaching Entity for the reasonable expense of the testing and will work with Attaching Entity to find a reasonable mitigation of the interference that does not impose undue burdens on CPS Energy's ability to provide electric service.

10. Wireless Interference. All Wireless Installations, including Mid-span Installations, shall be operated in such a manner which will not cause Wireless Interference to any existing or future CPS Energy Facilities, CPS Energy wireless systems or operations, governmental public safety facilities or operations. Nor shall they cause Wireless Interference to the facilities or operations of any other Attaching Entities or FCC-licensed operator. In the event of Wireless Interference, the Attaching Entity shall shut down the Wireless Equipment causing such interference within one (1) hour of CPS Energy contacting the Attaching Entity's

Network Operations Center. If the Attaching Entity fails to timely shut down the Wireless Equipment, CPS Energy reserves the right to cut off electricity to the Wireless Installation. Thereafter, following receipt of written notice of the incident, the Attaching Entity will take all commercially reasonable steps necessary to permanently eliminate such interference, including but not limited to, recalibration or replacement of Wireless Equipment, and the subsequent powering down of such equipment for intermittent testing pursuant to the requirements of Section III.A.10.c. In the event the Wireless Interference cannot be eliminated through equipment recalibration or replacement, the Wireless Installation shall be removed and the Wireless Equipment may be installed at an alternative pole-location that does not cause Wireless Interference. These activities shall be carried out by the Attaching Entity at its own expense.

In the event of Wireless Interference as described in the previous paragraph, the Attaching Entity shall correct such condition within fifteen (15) calendar days from receipt of written notice. Failure to timely correct such condition permanently, and the reactivation of the Wireless Equipment to the same effect, will result in CPS Energy, at its option, taking all necessary steps to eliminate the reoccurrence of Wireless Interference at Attaching Entity's expense. CPS Energy will attempt to notify the non-compliant Attaching Entity in writing prior to performing such steps whenever feasible. If any Attaching Entity continues to allow its Wireless Installations to interfere with the operation of any CPS Energy Facilities as described above after the initial fifteen (15) calendar day correction period, the Attaching Entity shall be subject to enforcement action, including but not limited to:

(i) Interruption of CPS Energy supplied power to the identified Wireless Installation;

(ii) Suspension of the processing any further Applications, by the Attaching Entity, pending resolution of such interference; or

(iii) Other remedies under the applicable Pole Attachment Agreement, Wireless Installation Agreement, or Wireless Addendum.

In situations where CPS Energy determines that an Attaching Entity's impairment or interference condition poses a potential Emergency situation, CPS Energy may perform such work and/or take such action(s) as it deems necessary to eliminate the potential Emergency situation without first giving written notice to the Attaching

Entity. As soon as practicable thereafter, CPS Energy will advise the non-conforming Attaching Entity of the work performed or the action(s) taken. The non-conforming Attaching Entity shall be responsible for all costs incurred by CPS Energy plus ten-percent (10%) in taking action pursuant to this Section III.A.10.

a. Interference Studies & Testing. In the Application process, and at Wireless Interference events, CPS Energy requires the documentation and analysis of testing for potential and possible Wireless Interference. CPS Energy reserves the right to hire consultants and industry experts to perform Wireless Interference testing, investigations, and/or analysis at the sole expense of the Attaching Entity.

(i) *Initial Installation* - In the Pre-Certification and/or Application process for the initial installation of the Wireless Installation, an Intermodulation Test report will be provided by the Attaching Entity.

(ii) *Equipment Upgrades or Replacements* - In the Pre-Certification and/or Application process for an upgrade, or non-like for like replacement of the initial Wireless Installation, an Intermodulation Test report will be provided by the Attaching Entity.

(iii) *Interference Studies & Testing Report* - The Intermodulation Test report will have an executive summary stating a "highly likely" or "not likely" for potential intermodulation issues. The intermodulation Test report shall be prepared by an Engineer trained and certified in radio frequency engineering.

b) At CPS Energy's sole discretion, a more in-depth radio frequency (RF) interference study may be required at certain occurrences, to include but not, limited to: 1) "highly likely" assessment of intermodulation issues in a summary of any Intermodulation Test report, 2) a known and/or unresolved RF interference complaint. The RF interference study will require an onsite visit(s) to gather field measurements and site conditions. The following area will be addressed: intermodulation products – transmitter and receiver, receiver noise & desensitization, transmitter noise & harmonics, and spurious emissions. Such RF interference study shall be undertaken and approved by an Engineer, trained and certified in radio frequency engineering. Additionally, the RF interference report will have an executive summary with

action statement, a method of RF interference remedies (if necessary), and all input parameters indexed.

c) An Attaching Entity may; intermittently, temporarily, or permanently; shut-off power to remedy and/or troubleshoot Wireless Interference issues. Electrical service shall not be reinstated without CPS Energy's written approval following a request to reestablish electrical service from the Attaching Entity. CPS Energy reserves the right to determine if all Wireless Interference issues are remedied prior to granting approval to reinstate electrical power.

11. **Enclosures.** Except as to Attaching Entity's facilities located on Attaching Entity's private property and/or easements, no Attaching Entity shall place new pedestals, vaults and/or other enclosures on or within four (4) feet of any Pole, Streetlight Pole, or other CPS Energy Facilities without CPS Energy's prior written permission. The Attaching Entity shall specifically identify this request in its Application for Permit submittal. If permission is granted by CPS Energy, all such installations shall be in compliance with the specifications and drawings provided in Appendix D, Appendix I, or other Applicable Engineering Standards. An Attaching Entity may retain any pedestals, vaults and/or other enclosures located within four (4) feet of any Pole, Streetlight Pole, or other CPS Energy Facilities that are in place on or before August 1, 2016 or result as part of a future pole replacements, provided the Attaching Entity complies with any and all directives issued by CPS Energy regarding such enclosures.

12. **Vegetation Management**. Attaching Entities shall be responsible for performing, or causing the performance of, all tree trimming and other vegetation management necessary for the safe and reliable installation, use, and maintenance of their Attachments, Overlashings, and/or Wireless Installations and to avoid stress on Poles and Streetlight Poles caused by contact between tree limbs and the Attaching Entities' Attachments, Overlashings, and/or Wireless Installation components.

Per NESC, all crossing span and adjoining spans on each side of a line crossing, railroad crossing, limited-access highway crossing, or navigable waterway requiring a crossing permit shall be kept free from overhanging or decayed trees or limbs that shall fall into the line, including both supply and communication cables.[7]

[7] NESC Rule 218, Vegetation Management, C2-2017.

All tree trimming shall be performed in accordance with OSHA[8] regulations and/or local municipal ordnances, set out in Appendix O, as may be amended from time to time. Attaching Entities shall use qualified tree trimming contractors approved by CPS Energy who shall adhere to industry and local municipal ordnances, standards, and requirements for tree trimming and vegetation management. Failure of a tree trimming contractor to adhere to and comply with such standards and requirements may result in CPS Energy retracting its approval of the tree trimming contractor to perform further work of any kind on or around CPS Energy Facilities. An Attaching Entity may be required to remedy any and all work, conducted by its tree trimming contractor that fails to comply with the tree trimming standards and requirements set forth in Appendix O. CPS Energy reserves the right to halt any and all work by any such tree trimming contractor that CPS Energy in its discretion deems to be unsafe or performs work contrary to the standards and requirements set forth in Appendix O and the Applicable Engineering Standards.

13. <u>Removal of Attaching Entity's Facilities</u>.

a) <u>Abandoned Facilities</u>. An Attaching Entity shall report, through the annual registration process described in Section II.F, and remove at the Attaching Entity's expense; all abandoned, non-functional, and obsolete Attaching Entity's Attachments, Overlashings, Wireless Installations, and/or other Communications Facilities on CPS Energy Poles or Streetlight Poles which the Attaching Entity

(i) No longer utilizes for providing Communications Services or Telecommunications Services;

(ii) Has abandoned or plans to abandon during the next reporting period; or

(iii) Has replaced with operating capacity of alternative facilities.

Except as otherwise provided, the Attaching Entity shall remove these facilities coincident with their replacement, and in all cases within one (1) year of the Attachments or Wireless Installations meeting any of the above conditions, unless the Attaching Entity receives written notice from CPS Energy that removal is necessary to accommodate CPS Energy's use of the affected Poles or Streetlight Poles, pursuant to a reservation of Capacity, in which case the Attaching Entity shall remove such Attachments or Wireless

[8] Occupational Safety and Health Administration (OSHA).

Installations within ninety (90) calendar days of CPS Energy issuing such written notice. Where an Attaching Entity has Overlashed such Attachments, the Overlashed Attachments may remain in place until CPS Energy notifies the Attaching Entity that removal is necessary to accommodate CPS Energy's use of the affected poles. The Attaching Entity shall give CPS Energy notice of any such Overlashed Attachments as required in Section IV.F.2.

b) Removal on Expiration/Termination. Subject to the expiration or other termination of an Attaching Entity's Pole Attachment Agreement, Wireless Installation Agreement, or any individual Permits, unless renewed; the Attaching Entity shall submit a written plan which describes the commitment, schedule, and process for the removal of its Attachments, Overlashings, and/or Wireless Installations from the affected Poles and Streetlight Poles to CPS Energy for approval. CPS Energy shall review such plan and either approve or request additional details within fifteen (15) calendar days of receipt of the plan. Following approval of the plan by CPS Energy, the Attaching Entity shall make judicious progress toward fulfilling the removal commitments made by the Attaching Entity in the plan. Such removals will be at the Attaching Entity's sole expense. If the Attaching Entity fails to remove such Attachments, Overlashings, and/or Wireless Installations within the timeframe contemplated by the plan, CPS Energy shall have the right to have such Attachments, Overlashings, and/or Wireless Installations removed at the Attaching Entity's expense without liability to CPS Energy.

14. Pre-Certification of Wireless System. Pursuant to Section II.A.77 and Section V.B.2.d, before submitting an Application for a Wireless Installation Permit, an Attaching Entity must submit a completed Request for Pre-Certification of Wireless System form to CPS Energy. A copy of this form is located in Appendix B and can be downloaded at *www.cpsenergy.com/poleattachments*. CPS Energy requires the initial configuration of a specific technology of a Wireless Installations for each Attaching Entity to be Pre-Certified in order to minimize potential interference with communication equipment essential to CPS Energy's core electric operations and for public safety. CPS Energy will complete its review and either approve or reject the Request for Pre-Certification of Wireless System within thirty (30) calendar days of receipt of a completed form. CPS Energy may extend this time requirement based upon the timely response of the Attaching Entity to any CPS Energy inquiry.

B. Pole Modifications and /or Replacements

1. **Restrictions on Certain Poles.** CPS Energy may deny an Application for Permit for access to a Pole or Streetlight Pole in flood zones, river crossings or other such locations, or if the proposed new Attachment or Wireless Installation cannot be accommodated without creating a potential to disrupt or impair CPS Energy Facilities or endanger the safety of people or facilities. In such instances, CPS Energy, in its sole discretion or solution, may erect a taller/larger Pole or Streetlight Pole to accommodate an Attaching Entity's Attachment or Wireless Installation if the costs of such replacement pole or solution is approved by and paid by the Attaching Entity in advance.

   Further, CPS Energy may require the removal or modification of an existing Attachment or Wireless Installation, at the Attaching Entity's expense, if CPS Energy reasonably determines that such Attachment or Wireless Installation did not meet the clearance requirements set forth in the Standards at the time of installation or modification, or may create a potential to disrupt or impair CPS Energy Facilities or endanger the general safety of people or facilities.

   a) Steel or Composite Poles. CPS Energy will consider requests by an Attaching Entity to access existing distribution steel or composite Poles.

      (i) *Steel Poles*. Attachments must be firmly secured with clamps and/or stainless steel banding. The drilling of any additional holes into steel Poles or associated equipment is prohibited. The only exception permitted is the use of a self-tapping set screw for grounding of equipment on steel Poles. Regarding Wireless Installations, an Attaching Entity may request access to a steel Pole provided the components of the Wireless Installation are secured with clamps and no Risers are attached to the surface of the pole. All Riser cables necessary to connect the components of the Wireless Installation must be installed inside the steel Pole, provided the structural integrity of the Pole is maintained.

      (ii) *Composite Poles*. Attachments must be firmly secured with clamps and/or stainless steel banding unless pre-drilled holes are available for use. The drilling of any additional holes into composite Poles or associated equipment is prohibited without express written permission from CPS Energy. Regarding Wireless Installations, an Attaching Entity may request access to

a composite Pole provided the components of the Wireless Installation are secured with clamps and no Risers are attached to the surface of the Pole. All Riser cables necessary to connect the components of the Wireless Installation must be installed inside the composite Pole, provided the structural integrity of the Pole is maintained. The use of a composite Pole for pole-top mounted Wireless Installations is permitted pursuant to the requirements in Appendix D.

b) Distribution Poles with Street Lights. Subject to these Standards, CPS Energy will consider requests by an Attaching Entity to access and attach to overhead distribution Poles with street lights installed on them.

c) Streetlight Poles. Wireless Installations may be installed on Streetlight Poles without any CPS Energy distribution primary circuits provided that the Wireless Installation does not interfere with the maintenance and operation of the streetlight or Streetlight Pole structure. While Streetlight Poles are ineligible for the installation of Attachments and Overlashings, Streetlight Poles shall have preferential treatment over distribution Poles as the site for Wireless Installations. To accommodate a Wireless Installation; a wood Streetlight Pole, and only as necessary, can be replaced or renewed for the installation of a larger wooden Streetlight Pole, provided the replacement Streetlight Pole is not taller than fifty-five feet (55') above final grade or greater than a Class 1 pole. On a cases-by-case basis, CPS Energy will consider the approval of non-wood Streetlight Poles, provided that the fully-integrated proposed Streetlight Pole meets all of the following criteria:

(i) Specifically manufactured to be a turn-key, dual-purpose structure for a Wireless Installation and a Streetlight Pole,

(ii) Meets the current and estimated future street-lighting purposes of the current Streetlight Pole,

(iii) Substantially similar to or improved in aesthetics, capabilities, and function to the current Streetlight Pole, and

(iv) Provides for no increase in maintenance requirements or operating costs to CPS Energy.

(v) The training of communication cables, wires, or fiber through the interior of Streetlight Poles is prohibited.

(vi) The drilling of any additional holes into metal or fiberglass Streetlight Poles or associated equipment is prohibited. The only exception permitted is the use of a self-tapping set screw for grounding of equipment on metal poles. No grounding is required for equipment installed on fiberglass poles

(vii) Any equipment to be mounted on such poles must be banded to the Streetlight Pole using stainless steel banding material.

d) Transmission Structures. CPS Energy's transmission poles, towers, or other structures are outside of the scope of these Standards and the Pole Attachment or Wireless Installation Agreement. No Attachments or Wireless Installations are permitted on CPS Energy transmission poles, towers, or other structures regardless of distribution underbuild or not.

e) Poles with Distribution Equipment Installed. Wireless Installations are prohibited on any CPS Energy Pole that has electric distribution equipment installed on them such as, but not limited to: transformers, capacitors, reclosers, sectionalizers, voltage-regulators, voltage-regulator racks, primary metering, etc.

f) Foreign Poles. Many of the poles to which CPS Energy's electrical lines are attached are not owned by CPS Energy and are outside the scope of these Standards. Therefore, CPS Energy cannot give permission to attach to these poles. The Attaching Entity is solely responsible for obtaining permission from the respective pole owner to install any Attachments or Wireless Installations on such non-CPS Energy owned poles.

2. CPS Energy Not Required to Relocate. Except as provided by the Make-Ready Electrical Construction process outlined in Section IV.B.4, Section IV.D.4, and Section V.B.4, no provision of these Standards requires CPS Energy to relocate, modify, or replace any Pole, Streetlight Pole, or other CPS Energy Facility for the benefit of any Attaching Entity, provided; however, that any denial by CPS Energy for modification of a pole or facility is applied in a nondiscriminatory manner to all Attaching Entities.

3. Guying. All guying, including the installation of independent anchors for each Attachment requiring guying to accommodate an Attaching Entity's Attachments or Wireless Installations shall be provided by and at the expense of the Attaching

Entity to the satisfaction of CPS Energy as specified in the Applicable Engineering Standards and in Appendix D.

4. **Aesthetic or Civic Projects.** From time-to-time, CPS Energy undertakes aesthetic or Civic Projects as required by ordinance or directive of the City or other governmental entities that direct CPS Energy to relocate or underground its facilities which will result in the removal of Poles or Streetlight Poles by CPS Energy upon completion of the aesthetic or Civic project.

a) For any project that CPS Energy undertakes for reasons as set forth in this Section III.B.4 herein, CPS Energy will provide the affected Attaching Entities the estimated design and construction schedule applicable to each specific aesthetic or Civic Project as soon as reasonably practical after CPS Energy receives such design and construction schedule from the appropriate project authority; but not less than forty-five (45) calendar days of the date CPS Energy expects to receive formal authorization or a directive to begin work. In this specific circumstance, CPS Energy will not require the Attaching Entity to submit an Application for the transfer of its Attachments or Wireless Installations to a new Pole or Streetlight Pole in the case of a pole line relocation for the aesthetic of Civic Project provided the Attaching Entity is actively engaged in the overall utility coordination of the aesthetic or Civic Project. Based on this joint utility coordination, CPS Energy will require written notification of the Attaching Entity's intent to transfer its Attachments and/or Wireless Installations to the new Pole or Streetlight Pole. CPS Energy will perform a Post-Construction Inspection as described in Section II.A.76.

Alternatively, should the Attaching Entity not participate in the utility coordination, described in this Section III.B.4.a, of the aesthetic or Civic Project; CPS Energy shall require the Attaching Entity to submit an Application for Permit pursuant to the procedures detailed in either Section IV.B, Section IV.C, Section IV.D, or Section IV.E, as appropriate.

b) In the event, CPS Energy is required to relocate its aerial electric distribution facilities underground, CPS Energy will accommodate the affected Attaching Entities in the design and construction of underground facilities, contingent upon the Attaching Entity entering into a Joint Trench Agreement with CPS Energy. All parties executing such Joint Trench Agreement will have an opportunity to install their conduits during the timeframe that CPS Energy has allowed for the relevant trenching to occur. Trenching, boring and other

common construction costs for the joint trenching shall be shared by the parties per the Joint Trench Agreement. If any affected Attaching Entity declines to do so, CPS Energy shall provide it written notice forty-five (45) calendar days in advance of the date upon which CPS Energy will remove the Poles or Streetlight Poles affected by the relevant aesthetic or Civic Project. CPS Energy shall bear no responsibility to any Attaching Entity in any manner for the removal of Attachments and/or Wireless Installations from the Poles or Streetlight Poles subject to removal.

c) In the event an Attaching Entity has affixed a Wireless Installation on a Pole or Streetlight Pole that is subject to removal as a result of an aesthetic or Civic Project, the Attaching Entity shall remove the Wireless Installation at its own expense within the time frame specified in this Section III.B.4. At the Attaching Entity's option, CPS Energy will make a reasonable attempt to locate an alternative pole for relocation of the Wireless Installation. CPS Energy makes no guarantee that an alternative pole may be permitted in the general vicinity of the aesthetic or Civic Project location.

5. **<u>Underground Relocation</u>**. This Section III.B.5 applies to any underground relocation that CPS Energy undertakes that is not either an aesthetic, Civic Project, or customer requested relocation.

a) If CPS Energy decides to move its aerial electric distribution system underground, CPS Energy shall notify all affected Attaching Entities as soon as practical. As a result of this notification, affected Attaching Entities shall

(i) relocate their Attachments and/or Wireless Installations within sixty (60) calendar days of issuance of written notice of the construction date from CPS Energy or such other period of time on which the parties agree; or

(ii) find other means to accommodate their Attachments or Wireless Installations.

b) Under these circumstances, CPS Energy will accommodate the affected Attaching Entities in the design and construction of underground facilities, contingent upon the Attaching Entity entering into a Joint Trench Agreement with CPS Energy. All parties executing such Joint Trench Agreement will have an opportunity to install their conduits during the timeframe that CPS Energy has allowed for the relevant trenching to occur. Trenching, boring and other common construction costs for the joint trenching shall be shared by the parties per the Joint Trench Agreement.

c) If any affected Attaching Entity fails to

(i) relocate its Attachments or Wireless Installations within sixty (60) calendar days of issuance of written notice from CPS Energy or such other period of time on which the parties agreed; or

(ii) find other means to accommodate their Attachments or Wireless Installations;

CPS Energy shall have the right to remove such Attachments and/or Wireless Installations at the Attaching Entity's expense without liability to CPS Energy. Notwithstanding the foregoing, CPS Energy shall negotiate in good faith to provide conduit occupancy rights to the affected Attaching Entities if CPS Energy moves its aerial system underground pursuant to the Attaching Entity executing a Joint Trench Agreement with CPS Energy.

6. **Customer Requested Underground Relocations.** This Section III.B.6 applies to any underground relocation that CPS Energy undertakes that is requested by a specific customer.

a) If CPS Energy is requested to move its aerial electric distribution system underground by a customer, CPS Energy shall notify all affected Attaching Entities as soon as practical. As a result of this notification, affected Attaching Entities shall

(i) relocate their Attachments and/or Wireless Installations within thirty (30) calendar days of issuance of written notice of the construction date from CPS Energy or such other period of time on which the parties, including the customer, agree; or

(ii) find other means to accommodate their Attachments or Wireless Installations.

b) Under these circumstances, CPS Energy will accommodate the affected Attaching Entities in the design and construction of underground facilities, contingent upon the Attaching Entity entering into a Joint Trench Agreement with CPS Energy. All parties executing such Joint Trench Agreement will have an opportunity to install their conduits during the timeframe that CPS Energy has allowed for the relevant trenching to occur. Trenching, boring and other common construction costs for the joint trenching shall be shared by the parties per the Joint Trench Agreement.

c) If any affected Attaching Entity fails to

(i) relocate its Attachments or Wireless Installations within thirty (30) calendar days of issuance of written notice from CPS Energy or such other period of time on which the parties, including the customer, agreed; or

(ii) find other means to accommodate their Attachments or Wireless Installations;

CPS Energy shall have the right to remove such Attachments and/or Wireless Installations at the Attaching Entity's expense without liability to CPS Energy or the customer. Notwithstanding the foregoing, CPS Energy shall negotiate in good faith to provide conduit occupancy rights to the affected Attaching Entities if CPS Energy moves its aerial system underground pursuant to the Attaching Entity executing a Joint Trench Agreement with CPS Energy.

7. <u>Abandonment or Removal of CPS Energy Facilities</u>.

a) Notwithstanding the provisions of Section III.B.4, Section III.B.5, or Section III.B.6, if CPS Energy decides at any time to abandon, remove or underground any Poles, Streetlight Poles or other CPS Energy Facilities on which one or more Attaching Entities have Attachments, Overlashings, or Wireless Installations; CPS Energy shall give the affected Attaching Entities notice in writing to that effect as soon as practical, but at least forty-five (45) calendar days prior to the date on which CPS Energy intends to abandon or remove such Poles, Streetlight Poles, or other CPS Energy Facilities. Notice may be limited to thirty (30) calendar days if CPS Energy is required to remove or abandon its facilities as the result of the action of a third-party and the greater notice period is not practical. Such notice shall indicate whether CPS Energy is offering the Poles, Streetlight Poles, or other CPS Energy Facilities for sale.

b) If, following the expiration of the applicable notice period, the affected Attaching Entities have not yet removed and/or transferred all their Attachments, Overlashings, or Wireless Installations therefrom and no single Attaching Entity entered into an agreement to purchase the abandoned Poles, Streetlight Poles or other CPS Energy Facilities pursuant to Section III.B.7.c below; CPS Energy shall have the right to have the Attachments, Overlashings, or Wireless Installations of the affected Attaching Entities removed and/or transferred from the Pole, Streetlight Pole, or other CPS Energy Facility at the respective Attaching Entity's expense plus ten-percent (10%). CPS Energy shall give the Attaching Entity ten (10) calendar days

prior written notice of any such removal or transfer of Attaching Entity's Attachments, Overlashings, or Wireless Installations unless circumstances dictate a shorter time period.

c) Should CPS Energy decide to abandon a Pole or Streetlight Pole; CPS Energy, in its sole and non-discriminatory discretion, may grant an interested Attaching Entity the option of purchasing such Pole or Streetlight Pole at a rate negotiated with CPS Energy. The interested Attaching Entity must notify CPS Energy in writing within twenty-one (21) calendar days of the date of CPS Energy's notice of abandonment that the Attaching Entity desires to purchase the abandoned Pole or Streetlight Pole. Thereafter, within forty-five (45) calendar days, the Attaching Entity must also secure and deliver proof of all necessary governmental approvals and easements allowing the Attaching Entity to independently own and access the pole within the forty-five (45) calendar day period. Should the Attaching Entity fail to secure the necessary governmental approvals, or should CPS Energy and the Attaching Entity fail to enter into an agreement prior to the end of the forty-five (45) calendar day period, the Attaching Entity must remove its Attachments, Overlashings, or Wireless Installations as required under Section III.B.7.a. CPS Energy is under no obligation to sell any Attaching Entity Poles, Streetlight Poles, or other CPS Energy Facilities that it intends to remove or abandon.

8. **Allocation of Costs.** The costs for any rearrangement or transfer of an Attaching Entity's Attachments or Wireless Installations, or the replacement of a Pole or Streetlight Pole; including any related costs for tree-cutting or trimming required to clear the new location of CPS Energy's cables or wires, shall be allocated to CPS Energy and/or the affected Attaching Entities on the following basis:

a) If CPS Energy intends to modify or replace a Pole or Streetlight Pole solely for its own electric business requirements, including pole maintenance requirements, and not for an aesthetic, Civic Project, or customer requested purposes under Section III.B.4 or Section III.B.6 respectively; CPS Energy shall be responsible for the costs related to the modification or replacement of the pole. Any affected Attaching Entity shall be responsible for the rearrangement or transfer of its Attachments or Wireless Installation at its expense.

b) Prior to making any such pole modification or replacement, CPS Energy shall provide the affected Attaching Entity written notice of at least forty-five (45) calendar days of its intent to allow the Attaching Entity a reasonable opportunity to elect to modify or add to their existing Attachment or Wireless Installation. Should the Attaching Entity so elect, it must seek CPS Energy's written permission. The notification requirement of this Section III.B.8.b shall not apply to Emergency situations.

c) If the Attaching Entity elects to modify or add to its Attachments or Wireless Installation, it shall bear its own respective allocation of total incremental costs incurred by CPS Energy in making the space on the modified or replaced poles accessible to the Attaching Entity. In no event will any Attaching Entity be treated in a discriminatory manner.

C. Overlashing

1. **Application Required.** Refer to Section IV.B for details on the Application process for new Attachments and Overlashings and Section IV.F for the Application process for Overlashing existing Attachments. Regardless of Overlashing size or methodology, Attaching Entities are required to maintain their Overlashing in compliance with the Applicable Engineering Standards in effect at the time of the Overlash installation except where a change is required by applicable law.

2. **Overlashing Third-Party Facilities.** An Attaching Entity is prohibited from Overlashing Communications Facilities of a third-party, including an Affiliate of the Attaching Entity, unless both the Attaching Entity and third-party have registered and executed a Pole Attachment Agreement with CPS Energy pursuant to Section II.B and Section II.C respectively. CPS Energy shall not grant a Permit authorizing the Overlashing of a third-party's Communications Facilities unless the Attaching Entity that owns the Attachments subject to Overlash has provided CPS Energy its consent in writing to such Overlashing.

3. **Annual Attachment Connection Fee.** An Attaching Entity or an Overlashing third-party shall not be required to pay a separate annual Attachment Connection Fee for such Overlashed Communications Facilities provided that the an annual Attachment Connection Fee is already being billed for the original Attachment that was Overlashed.

D. Inspection and Inventory of Attaching Entity's Facilities

1. **Inspections**. CPS Energy, at its discretion and in addition to any inspections undertaken during Make-Ready Work and Post-Construction Inspections, may engage in two other specific types of inspections or Inventory of Attachments and/or Wireless Installations to CPS Energy Poles or Streetlight Poles. These include: 1) routine visual inspections of Attachments and/or Wireless Installations that CPS Energy employees may conduct at any time (Section III.D.2); and 2) a formal Inventory that CPS Energy may conduct no more frequently than once every five (5) years[9], in which CPS Energy shall undertake with its own personnel or with outside contractors, subject to a formal competitive bidding basis, the cost of which shall be borne by all Attaching Entities on a pro-rata basis (Section III.D.3). Regardless of inspection or Inventory method:

a) CPS Energy expects an Attaching Entity to install, maintain, and inspect its Attachments, Overlashings, and Wireless Installations to ensure these facilities are in good order and safe to the general public at all times. If any inspection reveals that any Attaching Entity's Attachments, Overlashings, and/or Wireless Installations are not in compliance with the Applicable Engineering Standards in effect at the time the Application was approved, CPS Energy shall provide written notice and the Attaching Entity shall make any and all corrections to bring the Attachment, Overlash, and/or Wireless Installation to compliance with the Applicable Engineering Standards. If the severity of the non-compliance warrants, CPS Energy will assess and the Attaching Entity will be required to pay a Safety Violation Assessment as described in Appendix H.

b) If it is found that an Attaching Entity has made an Attachment or Wireless Installation without a Permit, the Attaching Entity shall pay an Unauthorized Attachment Charge or Unauthorized Wireless Installation Charge as specified in Appendix H, in addition to applicable Attachment Connection Fees, Application Fees, and Make-Ready Charges, if any.

c) Notwithstanding any other provisions contained in these Standards, including this Section III.D, no revisions to the Applicable Engineering Standards shall

[9] CPS Energy is expected to complete such an Inventory in 2018.

be retroactive to existing permitted Attachments, Overlashings, and/or Wireless Installations unless required by city, county, state, or federal law.

d) Subject to Section III.D.1.c), all Attachments, Overlashings, and/or Wireless Installations must comply with the Applicable Engineering Standards in effect at the time of installation or modification of the Attachment, Overlash, or Wireless Installation.

2. **Routine Visual Inspections and/or Inventory**. Any qualified CPS Energy employee may conduct a routine inspection and/or inventory of an Attaching Entity's Attachments, Overlashings, and/or Wireless Installations. In practice, these routine inspections and/or inventory may be undertaken and completed as part of the daily work assignment of a CPS Energy employee. The cost of this work is included in the determination of the annual Attachment Rate or Wireless Rate, as described in Appendix H. In the course of a routine visual inspection, a CPS Energy employee or contractor may require an Attaching Entity or its contractors installing an Attachment, Overlash, or Wireless Installation to supply evidence of a valid Permit or permission from CPS Energy to access a CPS Energy Pole, Streetlight Pole, or other CPS Energy Facilities. CPS Energy reserves the right to demand the Attaching Entity or its contractor to immediately suspend work on the Attachment, Overlash, or Wireless Installation should the Attaching Entity or contractor be unable to furnish the valid Permit or other notice of permission for CPS Energy's inspection. If CPS Energy directs the work be suspended, the Attaching Entity or its contractor shall suspended the work in a safe and orderly manner ensuring the suspension of the work will not cause a danger to CPS Energy employees, contractors, or the general public.

3. **Formal Inventory Performed By CPS Energy or Third-Party Contractor Subject To Competitive Bid.** CPS Energy may contract with a third-party contractor to conduct a formal Inventory of either all or designated Poles within the CPS Energy service area. The cost of this formal Inventory shall not be included in the calculation of the Attachment Rate or Wireless Rate, as described in Appendix H. All Attaching Entities shall cooperate and participate in the Inventory. Each Attaching Entity will share the total cost of the Inventory on a pro-rata basis with all other Attaching Entities based on the number of found Attachments and Wireless Installations belonging to each Attaching Entity. For the

limited purpose of determining the pro-rata shared costs, CPS Energy Facilities will count as one (1) Attachment on each Pole.[10] In undertaking this formal Inventory:

a) CPS Energy shall have sole responsibility for the management, review, and approval of the Inventory of its Poles.

b) CPS Energy shall routinely conduct meetings, communicate in writing, via electronic mail, with all Attaching Entities to discuss the progress and on-going results of the Inventory. CPS Energy will seek to find consensus with the Attaching Entities as to the most effective schedule and methodology of these meetings and communications. Each Attaching Entity shall be expected to cooperate fully with CPS Energy and/or the third-party contractor conducting the Inventory by assigning a single point of contact to attend project meetings and receive the written communications and to answer any questions either CPS Energy or the third-party contractor may have concerning the Attaching Entity's Communication Facilities and/or Wireless Installations. Attaching Entities shall be given access to the Inventory results and other supporting documentation, including maps, spreadsheets, and other related items. CPS Energy shall post on its webpage information regarding the status of the Inventory.

c) At the conclusion of the Inventory, CPS Energy shall provide a written report to each Attaching Entity containing a draft of the final Inventory Attachment and/or Wireless Installation count for the Attaching Entity and other documentation necessary to substantiate the third-party contractor's Inventory findings. Notwithstanding the challenge provisions of Section III.D.3.d below, if the Attaching Entity does not provide a written challenge to the draft Inventory count or results within thirty (30) calendar days of the issuance of CPS Energy's draft Inventory count, the Inventory count will be deemed correct.

d) Should an Attaching Entity wish to challenge the results of the draft Inventory report, the Attaching Entity shall, within thirty (30) calendar day of CPS Energy issuing the draft Inventory report, discussed in Section III.D.3.c above, provide CPS Energy written notice of the Attaching Entity's intent to challenge the results. In this notice, the Attaching Entity shall provide to CPS Energy all relevant documentation to substantiate its challenge for review and consideration by CPS Energy. All costs related to this challenge, including

[10] Applies to the 2017-2018 Inventory only.

both CPS Energy's and third-party contractor's labor and other expenses required to respond to and resolve the challenge shall be borne by the Attaching Entity challenging the Inventory results. Should multiple Attaching Entities provide notice of their intent to challenge the results, CPS Energy will pro-rate the cost and expenses required to respond to the challenge as described in this Section III.D.3.d to the Attaching Entities participating in the challenge. To the extent the Attaching Entity prevails in identifying errors or omissions in the Inventory, CPS Energy shall be responsible for its own and the third-party contractor costs. CPS Energy will meet with the Attaching Entity(s) requesting the challenge within ten (10 calendar days of receiving the written notice of challenge to discuss the challenge and attempt to reach agreement and settlement on the Attaching Entity's Attachment and/or Wireless Installation count. CPS Energy will issue its final decision in writing as to the resolution of the challenge within fifteen (15) days following this settlement meeting.

e) Following resolution of all challenges, pursuant to Section III.D.3.d, CPS Energy shall issue a final Inventory report and shall true-up each Attaching Entity's count to the number of Attachments and/or Wireless Installations identified in the final Inventory report including any Unauthorized Attachments or Unauthorized Wireless Installations as described in Section III.E. Unauthorized Attachments or Unauthorized Wireless Installations reported shall incur an Unauthorized Attachment Charge or Unauthorized Wireless Installation Charge, as provided in Appendix H. CPS Energy shall invoice the applicable Attaching Entity for the Unauthorized Attachments or Unauthorized Wireless Installations and payment shall be due within forty-five (45) calendar days of CPS Energy's issuance of the invoice. Failure of the Attaching Entity to pay the outstanding invoice timely and in full will result in the suspension of any current pending Applications and the immediate rejection of any future Applications until such payment is received in full.

4. **No Liability.** The making of any inspections or Inventory under this Section III.E, or the failure to do so, shall not operate to impose upon CPS Energy any liability of any kind whatsoever or relieve an Attaching Entity of any responsibility, obligations or liability, whether assumed or otherwise existing.

5. **Attaching Entity Conducted Inventory.** Nothing in these Standards prevents an Attaching Entity from performing its own Inventory of its own Attachments and/or

Wireless Installations which CPS Energy shall consider in the determination of that Attaching Entities total Attachment and/or Wireless Installation count. Before CPS Energy will consider such inventory, the Attaching Entity shall be required to meet with CPS Energy and describe the methodology and approach used to conduct the inventory. The cost of such inventory shall be the sole risk and responsibility of the Attaching Entity undertaking the inventory.

E. Unauthorized Occupancy or Access

1. **Unauthorized Attachments.** If, after the establishment of the Inventory baseline set forth in Section III.D.3 any Attachments or Wireless Installations belonging to an Attaching Entity that (1) are found to occupy a Pole or Streetlight Pole for which CPS Energy had not previously issued a Permit to the Attaching Entity, or (2) are being utilized to provide services that are not Communications Services or Wireless Services; CPS Energy, without prejudice to its other rights or remedies, will send the Attaching Entity a written Notice of the Unauthorized Attachment or Unauthorized Wireless Installation, a copy of which is provided in Appendix B. Such notice shall include the specific location of the Pole or Streetlight Pole where the Unauthorized Attachment is found and the nature of the Unauthorized Attachment or Unauthorized Wireless Installation. Within forty-five (45) calendar days upon receipt of this Notice of Unauthorized Attachment or Unauthorized Wireless Installation, the Attaching Entity must submit for the Unauthorized Attachment or Unauthorized Wireless Installation (1) an Application for a Permit, (2) the correct Application Fee, and (3) the Unauthorized Attachment Charge or Unauthorized Wireless Installations Charge to CPS Energy. Should the Attaching Entity fail to submit the Application for Permit, correct Application Fee, and the Unauthorized Attachment Charge or Unauthorized Wireless Installations Charge within the forty-five (45) calendar days, the Attaching Entity must remove its Unauthorized Attachment or Unauthorized Wireless Installation within the subsequent forty-five (45) calendar day period. If the Attaching Entity fails to remove the Unauthorized Attachments or Unauthorized Wireless Installations, CPS Energy may remove them without liability and the Attaching Entity shall promptly reimburse CPS Energy for the expense plus ten percent (10%) of such removal in all cases, no later than forty-five (45) calendar days following CPS Energy's issuance of invoice.

2. **<u>Unauthorized Attachment and Unauthorized Wireless Installation Charge</u>.** Pursuant to Section III.E.1 above, CPS Energy, without prejudice to its other rights or remedies, may assess an Unauthorized Attachment Charge or Unauthorized Wireless Installation Charge as specified in Appendix H, for each Attachment or Wireless Installation for which:

a) No Permit has been issued by CPS Energy,

b) Where an Attachment or Wireless Installation received a Permit and it was later found the information provided by the Attaching Entity on the Application was substantially incorrect, or

c) Where an Attachment or Wireless Installation has been significantly modified since the issuance of its initial Permit and such modification has not been approved by CPS Energy.

The Unauthorized Attachment Charge or Unauthorized Wireless Installation Charge is due and payable irrespective of whether a Permit is subsequently issued to the Attaching Entity for the Unauthorized Attachment or Unauthorized Wireless Installation.

4. **<u>No Ratification of Unauthorized Use</u>.** No act or failure to act by CPS Energy with regard to an Attaching Entity's Unauthorized Attachments or Unauthorized Wireless Installations shall be deemed as ratification of the unauthorized (unlicensed) use, and if any Permit should be subsequently issued, such Permit shall not operate retroactively or constitute a waiver by CPS Energy of any of its rights or privileges and that the non-compliant Attaching Entity shall remain subject to all liabilities, obligations and responsibilities under Pole Attachment Agreement, Wireless Installation Agreement, and these Standards in regards to said unauthorized (unlicensed) use from its inception.

5. **<u>Excessive Unauthorized Attachments</u>.**

a) If an Attaching Entity is determined by CPS Energy pursuant to an Inventory described in Section III.D or by other means to have Unauthorized Attachments accounting for the greater of (1) more than two percent (2%) of its total Attachments, or (2) thirty (30) or more Unauthorized Attachments; the Attaching Entity shall be in breach of its Pole Attachment Agreement and CPS Energy will have the right to terminate such Agreement subject to the cure provisions in the Pole Attachment Agreement. Failure to timely cure

such breach of contract could result in the removal of all of the Attaching Entity's Communication Facilities or CPS Energy, in its sole discretion, may exercise such other remedies as the Wireless Installation Agreement provides.

b) If an Attaching Entity is determined by CPS Energy pursuant to an Inventory described in Section III.D or by other means to have any Unauthorized Wireless Installations; the Attaching Entity shall be in breach of its Wireless Installation Agreement and CPS Energy will have the right to terminate such Agreement subject to the cure provisions in the Wireless Installation Agreement. Failure to timely cure such breach of contract could result in the removal of all of the Attaching Entity's Wireless Installations or CPS Energy, in its sole discretion, may exercise such other remedies as the Wireless Installation Agreement provides.

c) For those entities found with Unauthorized Attachments or Unauthorized Wireless Installations who do not have a valid Pole Attachment or Wireless Installation Agreement or who are otherwise not authorized to attach to CPS Energy Poles, Streetlight Poles, or other CPS Energy Facilities; CPS Energy reserves all of its rights under applicable law and equity to remedy the trespass.

F. Operational Duties & Responsibilities

1. **Duty to Inspect.** While recognizing its duty to maintain and update its electric distribution system in order to provide safe and reliable electric service, CPS Energy does not warrant that its Poles or Streetlight Poles are free of defects or non-compliant Attachments or Wireless Installations. By submitting an Application, an Attaching Entity acknowledges that it has an obligation to inspect CPS Energy's Poles, Streetlight Poles, and the premises surrounding such poles prior to commencing any work utilizing CPS Energy's Poles and/or Streetlight Poles or entering the premises surrounding such poles. **ANY CPS ENERGY FACILITIES WHICH MAY BE IDENTIFIED AS UNSAFE SHALL BE REPORTED TO CPS ENERGY AT (210) 353-HELP (353-4357) AS SOON AS PRACTICAL AFTER THEY ARE IDENTIFIED, FOR FURTHER HANDLING BEFORE THE ATTACHING ENTITY UNDERTAKES ANY WORK AT THAT LOCATION.**

2. **Knowledge of Work Conditions**. In all situations, it is the continuing responsibility of an Attaching Entity to acquaint itself, its employees, agents,

contractors, and/or subcontractors with these Standards including all Applicable Engineering Standards relating to the work for which a Permit may be sought by the Attaching Entity. Failure to become familiar with these Standards and with the facilities, difficulties, and/or restrictions attending the execution of such work may result in the denial of a Permit, delay in construction, assessment of penalties, and removal of a non-conforming Attachment, Overlashing, and/or Wireless Installation, among other remedies that CPS Energy may impose for violations of these Standards.

a) CPS Energy Poles and Streetlight Poles may be treated with chemical wood preservatives.

b) CPS Energy attempts to identify and mark such poles that should not be climbed. In all situations, it the responsibility of any person having a valid reason to climb a pole in performance of assigned job duties to be personally satisfied as to the structural integrity of such poles prior to climbing or doing other work on the pole.

3. **Duty of Competent Supervision and Performance.** All Attaching Entities are on notice that in the performance of work under these Standards, an Attaching Entity and its employees, agents, servants, contractors and/or subcontractors **will work near electrically energized lines, transformers, or other CPS Energy Facilities**, and it is the intention that energy therein will not be interrupted at any time, except in an Emergency endangering life, personal injury, or property. All Attaching Entities shall ensure that their employees, agents, servants, contractors and/or subcontractors have the necessary qualifications, skill, knowledge, training, and experience to protect themselves, their fellow employees, employees of CPS Energy, and the general public from harm or injury while performing work permitted pursuant to these Standards. In addition, all Attaching Entities shall furnish their employees, agents, servants, contractors and/or subcontractors competent supervision; as well as ensure these employees, agents, servants, contractors and/or subcontractors have sufficient and adequate tools, equipment, and training for the required work to be performed in a safe manner.

In the event of an Emergency or otherwise in which it may be necessary for CPS Energy to de-energize any part of CPS Energy Facilities, the Attaching Entity shall ensure that work is suspended until such CPS Energy Facilities have been de-energized **and** properly grounded and that no such work is conducted unless and

until an authorized CPS Energy employee has communicated that such CPS Energy Facilities have been made safe and are ready for the Attaching Entity to work.

4. **Requests to De-energize.** An Attaching Entity may request that CPS Energy de-energize and render safe any CPS Energy Facility for its benefit and convenience. Such request shall be made in writing and received by CPS Energy at least five (5) calendar days in advance of the date the work is planned. The Attaching Entity shall reimburse CPS Energy in full for all costs and expenses incurred, in accordance with Section II.I, to comply with such request. Before any CPS Energy Facilities are de-energized with the exception of actions taken pursuant to an Emergency; CPS Energy shall provide upon request an estimate of all costs and expenses to be incurred in accommodating the Attaching Entity's request.

5. **Interruption of Service.** In the event that an Attaching Entity causes an interruption of service by damaging or interfering with any CPS Energy Facilities, the Attaching Entity at its expense shall immediately do all things reasonable to avoid further injury or damages, direct and incidental, resulting therefrom and shall notify CPS Energy immediately of these activities.

6. **Duty to Inform. THE WORK CONTEMPLATED UNDER THESE STANDARDS INVOLVES IMMINENT DANGERS INCLUDING SERIOUS BODILY INJURY OR DEATH FROM ELECTROCUTION.** The Attaching Entity acknowledges such dangers and accepts as its duty and sole responsibility to notify, inform, and keep informed its employees, agents, servants, contractors and/or subcontractors of such dangers and shall not be passed or assigned this duty and responsibility to any third-party.

7. **Duty to Protect Data**. An Attaching Entity has an obligation and duty under Section §418.181 Texas Government Code (Confidentiality of Certain Information Relating to Critical Infrastructure) to protect and hold confidential CPS Energy data relating to CPS Energy Facilities and not disclose such data to any third-party without CPS Energy's written consent. CPS Energy will undertake reasonable measures to keep an Attaching Entity's proprietary data confidential and secure.

8. **Duty to Provide a Safety Briefing**. An Attaching Entity who desires to install a Wireless Installation on the CPS Energy system is required to prepare a Safety Briefing suitable for CPS Energy employees and contractors who may be required to work near and/or around such Wireless Installations. The content of the Safety

Briefing is to be pre-approved by CPS Energy before distribution and conveyance to CPS Energy employee and contractors.

IV. SPECIFICATIONS FOR WIRE ATTACHMENTS

A. Pole Attachment Application Process

CPS Energy offers Attaching Entities five Application processes for non-discriminatory access to CPS Poles for wire Attachments or Overlashings as shown in the Figure A and listed below. Application forms and additional information regarding the CPS Energy Pole Attachment Program can be downloaded at *www.cpsenergy.com/poleattachments*.

Competitive Provider - Standard Process.
Described in detail in Section IV.B

Private Network Process.
Described in detail in Section IV.C

Competitive Provider – Area Wide Network Deployment Process.
Described in detail in Section IV.D

Competitive Provider – Network Upgrade Process.
Described in detail in Section IV.E

Competitive Provider – Standard Process for Overlashing Existing Attachments.
Described in detail in Section IV.F.

Attaching Entities who are contemplating or engaged in either a new Area Wide Network Deployment or undertaking a Network Upgrade are required to contact CPS Energy to discuss coordination of the Development Plan under the Application process to be used for the project.

Process Step	Competitive Provider	Competitive Provider *Area Wide Network Deployment*	Competitive Provider *Network Upgrade*	Private Network	Competitive Provider *Standard Process for Overlashing Existing Attachments*
Process Criteria	Default Process for Attaching Entities Providing Communication Services	Process Required for Attaching Entities Deploying a New Area Wide Network	Process Required for Attaching Entities Deploying a Network Upgrade	Attaching Entities Not Engaged in Providing Competitive Communication Services	Default Process for Attaching Entities Overlashing Existing Attachments
Make-Ready Electrical Engineering (MREE)	Attaching Entity	Attaching Entity	Attaching Entity	CPS Energy	Attaching Entity
Application Review Period	*21 Days*	*21 Days*	*21 Days*	*45 Days*	*5 to 21 Days*
Make-Ready Electrical Construction (MREC)	CPS Energy	Attaching Entity	Attaching Entity or CPS Energy	CPS Energy	CPS Energy
Make-Ready Communication Construction (MRCC): 1-Touch Transfer-Simple	Attaching Entity	Attaching Entity	Attaching Entity	Attaching Entity	Attaching Entity
MRCC: Complex-Transfer	Attaching Entity	Attaching Entity	Attaching Entity	Attaching Entity	Attaching Entity
Post-Construction Inspections	CPS Energy	CPS Energy	CPS Energy	CPS Energy	CPS Energy
Control over Contractors	Attaching Entity & CPS Energy	Attaching Entity	Attaching Entity and/or CPS Energy	Attaching Entity & CPS Energy	Attaching Entity & CPS Energy

Figure A: Key Phases and Responsible Parties of the CPS Energy Pole Attachment Processes

B. Competitive Provider - Standard Process

A high-level workflow of the Competitive Provider - Standard Process (Standard Process) for wire Attachments to CPS Energy Poles is illustrated in the Figure B below.

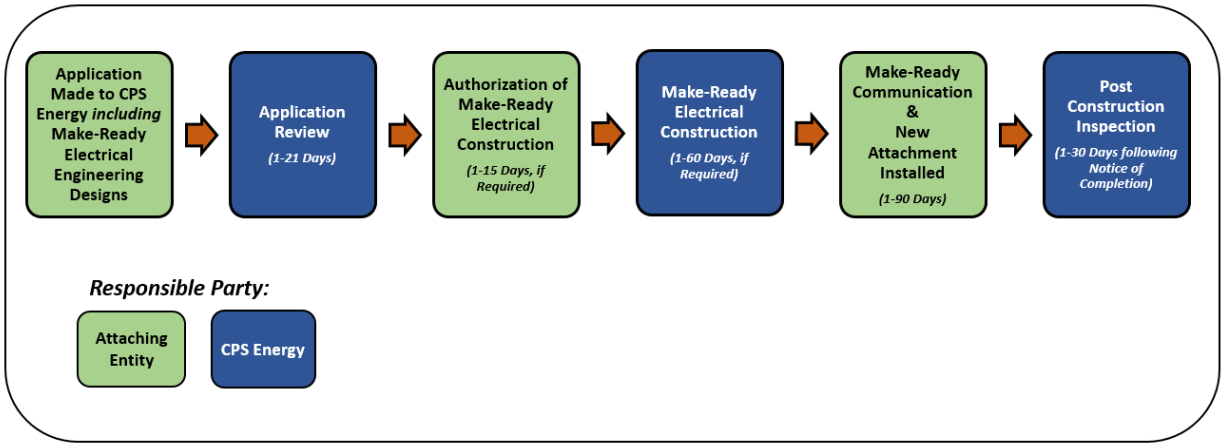

Figure B: Competitive Provider - Standard Process for Wire Attachments

1. **<u>Eligibility</u>**. Default process for any Attaching Entity with a valid Pole Attachment Agreement that is a Competitive Provider.

2. **<u>Application for Permit Required</u>.** An Attaching Entity shall not install any new Attachment or new Overlashing, except as provided in Section IV.F, on any CPS Energy Pole without first submitting an Application and obtaining a Permit pursuant to the requirement and procedures set forth below and elsewhere in these Standards.

   a) <u>Application Form.</u> All Attaching Entities shall use the Application for Pole Attachment Form, a copy of which is provided in Appendix B and available for download at *<u>www.cpsenergy.com/poleattachments</u>*, which may be amended from time to time, provided that any such amendments are consistent with Applicable Engineering Standards and are applied to all similar types of Attachments on a non-discriminatory basis.

      (i) A single Application may include up to a maximum of one-hundred twenty (120) Poles for new Attachments.

(ii) CPS Energy's acceptance of the submitted design documents required as part of a complete Application Form (Section IV.B.2.e) does not relieve the Attaching Entity of full responsibility for any errors and/or omissions in the engineering analysis and compliance with all Applicable Engineering Standards.

b) Service Drops. The submission of an Application is not required to install a Service Drop on a Pole on which the Attaching Entity already has an authorized Attachment, provided that the Attaching Entity provides notice of such Service Drop pursuant to Section II.F.1 and the Service Drop is installed within the previously authorized space. Service Drops on Poles for which the Attaching Entity does not have an authorized Attachment may be authorized by CPS Energy on a monthly basis, provided the Attaching Entity submits a corresponding Application for Permit within thirty (30) calendar days of the Service Drop installation.

c) Pole Ownership. For the purposes of Application submittal, unless CPS Energy records and/or Poles indicate otherwise, CPS Energy shall be presumed to be the owner all Poles subject to Attachment. The Attaching Entity is responsible for field verifying Pole ownership and notifying CPS Energy of any discrepancies between CPS Energy's maps/records and the actual Poles in the field.

d) Compliance with Standards. Attaching Entity shall comply with the Texas Engineering Act at Section 1001.001, et seq., of the Texas Occupations Code to the extent it is applicable to the work described herein, and with the most current version of the National Electrical Safety Code (NESC), including any and all revisions to both, and all other Applicable Engineering Standards. The Attaching Entity shall certify its compliance with the above on each Application it submits to CPS Energy for processing. The certification statement shall be signed by an employee or agent of the Attaching Entity who has the final authority or responsibility to approve the Application. CPS Energy will not process an Application that fails to provide the signed certification statement included therein. The Attaching Entity shall provide documentation, sealed by an Engineer, establishing that the Attaching Entity's applicable Make Ready Electrical Construction design and Pole Loading Analysis (PLA) documents comply with all requirements specified by the NESC and the Applicable Engineering Standards.

(i) *Pole Loading Analysis (PLA).* An Attaching Entity, in connection with an Application, must comply with the PLA methodology described herein and in Appendix G. Acceptable software for use of PLA shall be a commercially available product with general industry acceptance. Should the Attaching Entity utilize a commercially available software application that CPS Energy does not possess; the Attaching Entity shall make available to CPS Energy at least one software license for CPS Energy use at the Attaching Entity's expense, subject to CPS Energy's Information Technology requirements. The Attaching Entity will gather the pole and Attachment physical and technical information required to conduct a PLA on Poles that meet the criteria for PLA as described in Appendix G, with assistance as required from CPS Energy.

e) Submission of Application. Completed Applications may be submitted by either U.S. mail, electronically to ***poleapplications@cpsenergy.com***, or other means mutually agreeable by CPS Energy and the Attaching Entity. The Application shall include:

(i) A completed Application form, as provided in Appendix B;

(ii) Detailed design documents of the required Make-Ready Electrical Construction, prepared or reviewed by an Engineer which includes the Attaching Entity's estimated cost of proposed Make-Ready Electrical Construction;

(iii) A proposed installation schedule;

(iv) PLA worksheets and results, as required by Appendix G;

(iv) Relevant pole data; and

(v) If applicable, a Waiver Request form, as described in Section III.A.6.

Such Application shall be prepared by, or under the authority of, the Attaching Entity. The detailed design documents" referenced in this Section IV.B.2.e will be undertaken and completed in design tools to be determined by CPS Energy. All actions pursuant to this Section IV.B.2.e shall be at the Attaching Entity's cost and risk.

CPS Energy shall invoice the Attaching Entity the appropriate Application Fee[11] pursuant to Section II.I.2 and Appendix H.

[11] Application Fees for wire Attachments will be discontinued on January 1, 2017.

3. **<u>CPS Energy Review of Application.</u>** CPS Energy will respond to each completed Application and Make-Ready Engineering design documents submitted by the Attaching Entity within twenty-one (21) calendar days of receipt. Should CPS Energy be required to return an Application for clarification or modification, the time required for the Attaching Entity to address the concerns raised and return the Application shall not count against the twenty-one (21) calendar day period. For Applications with Overlashing only, CPS Energy will respond pursuant to Section IV.F. Any Application that does not conform to the requirements provided in Section IV.B.2.e and the Applicable Engineering Standards will be deemed incomplete and immediately rejected by CPS Energy. If an Application is rejected as incomplete, the Attaching Entity will be provided with a detailed description of changes, modifications, or revisions to the Application necessary for CPS Energy's review and approval within ten (10) calendar days of receipt of the Application.

In the event CPS Energy does not finalize its review of a completed Application within twenty-one (21) calendar days, CPS Energy may impose a one-time, additional seven (7) calendar day extension period in which to complete its review for each Application. CPS Energy shall provide the Attaching Entity with seven (7) calendar days' prior notice that it intends to exercise its option to impose the extension period. Should CPS Energy fail to take action on the Application within the extension period, all proposed Attachments or Overlashings included within that specific Application shall be deemed approved, subject to all then current Applicable Engineering Standards and all other procedural and operational requirements under these Standards.

a) <u>Review.</u> In making its decision as to whether to approve an Application, CPS Energy will consider the Applications proposed compliance with engineering and safety requirements, in accordance with the Applicable Engineering Standards set forth in Section II.A.4. In addition, CPS Energy shall consider Capacity constraints, including the future needs of CPS Energy as determined in accordance with the Reserved Capacity provisions set forth in Section II.H.10, flood zone requirements, in-flight CPS Energy projects, and other circumstances known at the time that would directly affect the engineering, safety requirements, and Capacity constraints of the Application submission and review which may impact the Application, including any known third-party requests for Attachment to the same Pole as described in Section IV.B.3.f below.

b) Make-Ready Electrical Construction. In the event that an Attaching Entity's proposed Application requires CPS Energy to undertake and complete Make-Ready Electrical Construction to accommodate the Attaching Entity's Application, CPS Energy will review the detailed design documents and the cost estimate for this Make-Ready Electrical Construction work provided by the Attaching Entity. Following CPS Energy's approval of the Make-Ready Electrical Construction design and review of the estimated Make-Ready Electrical Construction costs, CPS Energy may, at its discretion, revise the cost estimate to more accurately reflect the anticipated cost of the work. CPS Energy will then submit this estimate of the cost of Make-Ready Electrical Construction to the Attaching Entity utilizing the CPS Energy Authorization for Make-Ready Work form, provided in Appendix B, for approval from the Attaching Entity to proceed. The Attaching Entity shall approve the make advanced payment of this cost estimate in order for any Make-Ready Electrical Construction to procced in accordance with the provisions of Section II.I.3. The Attaching Entity shall have fifteen (15) calendar days following the issuance of the CPS Energy Authorization for Make-Ready Work form to approve the estimate and provide payment. Failure of the Attaching Entity to respond to CPS Energy or return the CPS Energy Authorization for Make-Ready Work form within the fifteen (15) calendar day period will result in the Application being cancelled by CPS Energy, with all applicable Application Fees being non-refundable.

c) Changes Required. If CPS Energy describes any changes, modifications, or revisions to the proposed Make-Ready Electrical Construction design documents pursuant to this Section IV.B.3, CPS Energy shall notify the Attaching Entity in writing. Upon receipt of this notice, the Attaching Entity may notify CPS Energy in writing that it agrees to the changes, modifications, or revisions to the proposed Make-Ready Electrical Construction design required by CPS Energy, in which case the Attaching Entity may resubmit the Application as amended and it shall be deemed granted; or the Attaching Entity may propose alternative changes, modifications, or revisions consistent with Applicable Engineering Standards by resubmitting the Application with such other alternative proposals, provided that such resubmission explains the reasons for the alternative proposals and addresses all concerns raised by CPS Energy in response to the initial Application. The alternative proposals shall not be the original Make-Ready Engineering design documents rejected by CPS Energy.

The Attaching Entity shall incur an Application Fee, if applicable, upon resubmitting the Application containing the alternative proposals. CPS Energy shall have twenty-one (21) calendar days of receipt thereof to provide the Attaching Entity with:

(i) Notification that access is granted based on the alternative proposals; or

(ii) A detailed description of any changes, modifications, or revisions to the alternative proposal necessary to comply with safety, reliability, or generally applicable engineering practices or standards.

In the event CPS Energy fails to complete its review within twenty-one (21) calendar days of the resubmitted Application containing the alternative proposals for Make-Ready Electrical Construction, CPS Energy may impose a one-time additional seven (7) calendar day extension period in which to complete its review of the resubmitted Application. CPS Energy shall provide the Attaching Entity with seven (7) calendar days' prior notice that it intends to exercise its option to impose the extension period. Should CPS Energy fail to take action on the resubmitted Application within the extension period, the alternative proposal shall be deemed approved, subject to all then current Applicable Engineering Standards and all other procedural and operational requirements under these Standards.

d) Compliance by Attaching Entity. CPS Energy's acceptance of the submitted Make-Ready Electrical Construction design and engineering documents does not relieve the Attaching Entity from compliance with the requirements of the Texas Engineering Act, the National Electrical Safety Code, and all other Applicable Engineering Standards as required by this Standard.

e) Application Approval.

(i) *If Make-Ready Electrical Construction is Required*. After acceptance of all necessary revisions, CPS Energy will issue to the Attaching Entity the CPS Energy Authorization for Make-Ready Work, a copy of which is in Appendix B. The Attaching Entity shall comply with the provisions of Section IV.B.4.

(ii) *If Make-Ready Electrical Construction is Not Required*. After acceptance of all necessary revisions to the Application, CPS Energy will issue to the Attaching Entity the CPS Energy Notice to Proceed, a

copy of which is in Appendix B. The Attaching Entity shall comply with the provisions of Section IV.B.4.e.

f) Treatment of Multiple Requests for Same Pole. CPS Energy shall consider complete Applications received from multiple Attaching Entities to attach to the same Pole on a "first-come, first-served", non-discriminatory basis.

(i) If CPS Energy receives a subsequent Application for the same Pole from a second prospective Attaching Entity following acceptance of a complete Application and prior to completing Make-Ready Electrical Construction or issuing a Notice to Proceed on said first Application, CPS Energy shall reject the second Application and any subsequent Applications for the same Pole without consideration of the proposed Attachments from the Application which was first in time. CPS Energy will reconsider the rejected Application if it is revised and resubmitted to eliminate the conflict with the first in time Application previously approved. Should the second Application be for a Wireless Installation, CPS Energy will evaluate the Wireless Installation Application as if the Attachment of the first Attaching Entity has been completed.

(ii) Should the first in time Application require CPS Energy to undertake and complete any Make-Ready Electrical Construction on a Pole with a subsequent request for an Attachment or Wireless Installation received before CPS Energy completes such Make-Ready Electrical Construction, CPS Energy shall meet with each Attaching Entity and allocate the costs to complete this Make-Ready Electrical Construction evenly between the Attaching Entities requesting access to the Pole.

(iii) Where Make-Ready Electrical Construction on the Pole with multiple Attachment and/or Wireless Installation requests arise not required or has been already completed; in the event the Attaching Entity that was first in time fails to timely affix its Attachment or Wireless Installation in accordance with Section IV.B.4.f or Section V.B.4.f, as applicable, CPS Energy will withdraw the first Application and process the second Application without consideration to the initial first-in-time Application.

(iv) CPS Energy will simultaneously consider multiple Applications addressing the Communications Facilities of separate Attaching Entities provided such Applications are filed together and each Application includes one common set of engineering design documents accounting

for the Communications Facilities of all the applicants. In such case, CPS Energy will issue a Permit to each Attaching Entity that filed an Application and such Permits will be subject to one set of construction plans to be carried out by joint agreement of the parties including the cost allocation of all required Make-Ready Work. Such allocation does not apply to Risers.

4. **Make-Ready Electrical Construction.** If Make-Ready Electrical Construction is required to accommodate an Attaching Entity's Attachment and/or Overlashing, CPS Energy or its contractors shall perform such work at Attaching Entity's expense as provided in Section IV.B.3, Section IV.B.5.e, and Appendix B.

a) Advance Payment. Upon execution of CPS Energy Authorization for Make-Ready Work by an Attaching Entity, CPS Energy shall schedule the Make-Ready Electrical Construction. Pursuant to Sections II.I.3, CPS Energy shall require payment in advance for any Make-Ready Electrical Construction, to be performed by CPS Energy or its contractors based upon the estimated cost of such work.

b) Work Performed by CPS Energy or CPS Energy Contractor. Make-Ready Electrical Construction shall be performed only by CPS Energy and/or a contractor authorized by CPS Energy to perform such work. CPS Energy will strive to perform the Make-Ready Electrical Construction to accommodate an Attaching Entity's Communications Facilities within sixty (60) calendar days of receipt of the advanced payment estimate for the Make-Ready Electrical Construction. CPS Energy shall provide to the Attaching Entity as soon as possible the estimated schedule for completing the Make-Ready Electrical Construction. In the event that CPS Energy is unable to complete the Make-Ready Electrical Construction within the sixty (60) calendar day period, an Attaching Entity may request in writing to CPS Energy the use of temporary Attachments by submitting a Request for Temporary Attachment form, a copy of which is available at *www.cpsenergy.com/poleattachments* and located in Appendix B. Upon receiving this written request, CPS Energy shall coordinate with the Attaching Entity on a non-discriminatory basis to determine all reasonable means to accommodate the temporary Attachment request subject to compliance with the Applicable Engineering Standards.[12] Any temporary Attachments must be removed and properly installed upon the

[12] NESC, Rule 013B4 and Rule 014, C2-2017.

completion of the Make-Ready Electrical Construction. The cost to install and remove a temporary Attachment shall be borne by the Attaching Entity.

c) Work Schedule. In performing all Make-Ready Electrical Construction to accommodate an Attaching Entity's Attachments, CPS Energy will include such work in its normal work schedule on a non-discriminatory basis. In the event the Attaching Entity requests that the Make-Ready Electrical Construction be performed on a priority basis or outside of CPS Energy's normal work hours, the Attaching Entity shall pay the appropriate increased costs. Nothing herein shall be construed to require performance of any Attaching Entity's work before other scheduled work, CPS Energy service restoration, or other Emergency work.

d) Notifying Other Attaching Entities. Prior to commencing Make-Ready Electrical Construction, CPS Energy shall provide no less than ten (10) calendar days' written notice to the Attaching Entities on the affected Pole of the impending work. Such notification will be sent through the National Joint Utilities Notification System (NJUNS).

e) Notice to Proceed. Following completion of the Make-Ready Electrical Construction, CPS Energy will issue a CPS Energy Notice to Proceed, a form of which is provided in Appendix B, to the Attaching Entity (applicant) in writing that the Pole is available for Make-Ready Communications Construction and Attachment. When applicable, the Attaching Entity shall proceed to install its Attachments utilizing the One-Touch Transfer Process described in Section IV.B.5 below. Whenever the transfer of an Attachment or Wireless Installation would requires cutting or splicing of the Communication Facility or disruption of wireless service, the Complex Transfer Process in Section IV.B.6 below shall apply.

f) Failure to Attach. An Attaching Entity must exercise the right granted by the CPS Energy Notice to Proceed within ninety (90) calendar days of issuance of the Notice to Proceed. If needed, the Attaching Entity may request in writing to CPS Energy an additional thirty (30) calendar day extension of the effective period of the Notice to Proceed. The request for this extension must be received by CPS Energy no later than seven (7) calendar days before the expiration date provided in the Notice to Proceed. In considering this request, CPS Energy will review past construction practices of the Attaching Entity and current efforts underway to complete the installation for which the

extension was requested. CPS Energy will provide a written response to the request for extension within three (3) calendar days of receiving the request. CPS Energy, at its discretion, may not consider any requests for extension received within seven (7) calendar days of the expiration of the Notice to Proceed.

(i) Failure to install an Attachment within the effective period of the Notice to Proceed, or extended period if granted by CPS Energy, will result in expiration of the Application and the forfeiture of the applicable Application Fees and any payments made for Make-Ready Work already completed. Following expiration of an Application, should the Attaching Entity wish to continue to install the Attachment subject to the expired Application, the Attaching Entity must submit a new Application covering the same Attachment including all appropriate Application Fees.

(ii) CPS Energy and the Attaching Entity shall determine a mutually-agreeable schedule for the completion of the Make-Ready Work should an issue of Force Majeure, as described in the Pole Attachment Agreement, be asserted by either party.

5. **Make-Ready Communication Construction – One Touch Transfer.** The transfer of third-party Attachments or Wireless Installations, whether conducted by an Attaching Entity or CPS Energy, shall hereinafter be referred to as the "One-Touch Transfer Process." Pursuant to these Standards, the One-Touch Transfer Process allows an Attaching Entity to transfer or rearrange an Attachment of one or more Attaching Entities in the Communications Space of a CPS Energy Pole, and coordinate the Joint Meeting Transfer of a Wireless Installation, as may be necessary to accommodate the installation of a new Attachment contingent upon compliance with requirements identified in this Section IV.B.5. All One-Touch Transfers conducted by an Attaching Entity or CPS Energy must comply with the following requirements:

a) Simple Transfers Only. One-Touch Transfers shall be limited to rearrangement or transfer of third-party Attachments on an existing Pole and/or a Mid-span Installation suspended by a Messenger cable between two Poles. Such Attachment or Mid-span installation may be rearranged within an existing Pole or transferred onto a replacement Pole Installation (along with any supporting Communication Facility or Overlash) is not subject to

cutting and splicing and any affected Mid-span Installation is not severed from the Communication Facility providing connectivity.

b) Joint Meeting Transfer. Any Wireless Installation on a Pole hosting Attachments subject to One-Touch Transfer shall be modified within the same Pole or transferred onto a replacement Pole at the same time as the Attachments subject to Simple Transfer through the coordination of a Joint Meeting Transfer of the Wireless Installation.

(i) Before an Attaching Entity seeking to avail itself of the One-Touch Transfer process begins to undertake Make-Ready Communication Construction, it shall, not less than twenty-one (21) calendar days before the date contemplated for the start of Make-Ready Communication Construction, notify in writing each affected existing Attaching Entity owning a Wireless Installation on the affected Pole and arrange for a Joint Meeting Transfer of the Wireless Installation.

(ii) Such notice shall identify the specific Pole subject to Simple Transfer where the Wireless Installation is mounted. The written notice shall provide sufficient instructions to coordinate the Joint Meeting Transfer.

(iii) Either party may make earlier arrangements with the other for any proposed Joint Meeting Transfer. Both Attaching Entities have an obligation to cooperate to successfully complete the Joint Meeting Transfer of the Wireless Installation. In the event the Attaching Entity utilizing the One-Touch Transfer Process fails to provide the required notice of the Joint Meeting Transfer to the Attaching Entity that owns the Wireless Installation, the former will be responsible for the cost of removing and relocating the Wireless Installation to a replacement Pole.

(iv) In the event the Attaching Entity that owns the Wireless Installation fails to attend the Joint Meeting Transfer or attends the meeting but fails to relocate the Wireless Installation as part of the One-Touch Transfer Process, such Attaching Entity shall be responsible for modifying the Wireless Installation within the same Pole or transferring the Wireless Installation onto a replacement Pole within ten (10) calendar days following the date of the failed Joint Meeting Transfer. Such failure to relocate the Wireless Installation within such ten (10) day period shall result in CPS Energy finding the Wireless Installation in non-compliance with these Standards subject to a penalty as provided in Appendix H. In addition, such Attaching Entity shall be responsible for

the cost of removing the original Pole should a replacement Pole be required to be installed as part of the One-Touch Transfer Process.

c) Certified Contractors. An Attaching Entity must engage qualified contractors approved by CPS Energy pursuant to a contractor approval program developed by CPS Energy with the input of Attaching Entities.

d) Applicability to CPS Energy. CPS Energy's communications wires or facilities installed in the Communication Space of a Pole will also be subject to the One-Touch Transfer Process.

e) One-Touch Transfers Subject to Applicable Engineering Standards. All Make-Ready Communication Construction performed under the One-Touch Transfer Process shall meet all Applicable Engineering Standards, including CPS Energy's clearance standards. Applications that include Make-Ready Communications Construction and One-Touch Transfers that fail to meet Applicable Engineering Standards will be rejected by CPS Energy.

f) Cost Responsibility. With the exception of instances where in the sole judgement of CPS Energy, a Pole has been identified as defective, CPS Energy will be responsible for the cost to replace such defective Pole. In all other instances, the Attaching Entity shall pay all costs of Make-Ready Electrical Construction and Make-Ready Communications Construction associated with One-Touch Transfers as described below:

(i) Where the Pole includes one or more third-party Attachment(s) that fail to meet Applicable Engineering Standards but otherwise there is enough space on the Pole to accommodate the Attaching Entity's Attachment, Make-Ready Work will not include the transfer of the third-party Attachment(s), unless the lowest Attachment on the Pole fails to meet NESC clearance standards and/or poses a public safety hazard. In that case, Make-Ready Work will include the relocation of the non-compliant Attachment and the Attaching Entity may recover the cost to bring such Attachment into compliance from the owner of the non-complaint Attachment.

(ii) Where the Pole includes one or more third-party Attachment(s) that fail to meet Applicable Engineering Standards, and in order to accommodate the Attaching Entity's Attachment on the same Pole the third-party Attachment(s) must be rearranged, the cost of rearranging the third-party Attachment(s) will be included in Make Ready Work.

Provided that if the lowest Attachment on the Pole fails to meet NESC clearance standards and/or poses a public safety hazard, the Attaching Entity may recover the cost to bring such Attachment into compliance from the owner of that Attachment, but no others.

(iii) Where the Pole includes one or more third-Party Attachment(s) that fail to meet Applicable Engineering Standards, and in order to accommodate the Attaching Entity's Attachment a new Pole must be installed, the cost of the new Pole and the transfer of the third-party Attachment(s) will be included in the Make-Ready Work.

(iv) Where the Pole includes one or more third-party Attachment(s) that meet Applicable Engineering Standards, and otherwise there is enough space on the Pole to accommodate the Attaching Entity's Attachment, Make-Ready Work will not include the transfer of the third-party Attachment(s).

(v) Where the Pole includes one or more third-party Attachment(s) that comply with Applicable Engineering Standards, and in order to accommodate the Attaching Entity's Attachment on the same Pole the third-party Attachment(s) must be rearranged, the cost of rearranging the third-party Attachment(s) will be included in Make-Ready Work.

(vi) Where the Pole includes one or more third-party Attachment(s) that comply with Applicable Engineering Standards, and in order to accommodate the Attaching Entity's Attachment a new Pole must be installed, the cost of the new Pole and the transfer of the third-party Attachment(s) will be included in Make-Ready Work.

g) Notice of Transfer. An Attaching Entity shall provide all third-parties having wire Attachments or Overlashings affected by a proposed One-Touch Transfer with advanced written notice of such One-Touch Transfer no less than twenty-one (21) calendar days prior to undertaking such One-Touch Transfer. This notice shall be provided using the NJUNS to a duly designated representative of the affected Attaching Entity, unless another method of notice is prescribed by CPS Energy. The Attaching Entity who desires to utilize the One-Touch Transfer Process shall bear the responsibility of determining the appropriate representative for each Attaching Entity affected by the Attaching Entity's implementation of the One-Touch Transfer Process.

h) Critical Communication Facilities. If an affected Attaching Entity, in its reasonable discretion, determines that a proposed One-Touch Simple Transfer poses a risk of disconnection or interruption of service to a Critical Communications Facility, the affected Attaching Entity shall notify the requesting Attaching Entity and CPS Energy in writing within ten (10) calendar days of receiving the notice of transfer described in Section IV.5.g. The affected Attaching Entity is obligated to make the requested transfer of their Critical Communication Facilities within fifteen (15) calendar days of providing such notice. Failure to transfer the Critical Communications Facilities in a timely manner will subject the Critical Communications Facility to the One-Touch Transfer Process.

i) Post-Transfer Notice. Within fifteen (15) calendar days following the completion of a One-Touch Transfer, the Attaching Entity shall send written notice of the One-Touch Transfer and as-built reports to each affected Attaching Entity. Within thirty (30) calendar days of receipt of these as-built reports, the Attaching Entity that owns the Communications Facilities that were transferred or relocated may conduct an inspection at the expense of the Attaching Entity who moved the facilities. If the One-Touch Transfer failed to meet all Applicable Engineering Standards, the owner of the Communications Facilities subject to transfer or relocated will notify the Attaching Entity responsible for the One-Touch Transfer of any deficiency, which will be corrected within fifteen (15) calendar days following receipt of such written notice at the expense of the Attaching Entity responsible for the One-Touch Transfer. The Attaching Entity responsible for the One-Touch Transfer shall pay the actual, reasonable, and documented inspection expenses incurred by the owner of the Communication Facilities subject to transfer or relocated, within forty-five (45) calendar days of receipt of an invoice. Failure of the owner of the moved or relocated Attachment to undertake and complete the inspection within the thirty (30) calendar day period shall be deemed acceptance of the One-Touch Transfer.

j) Attaching Entity's Attachments Subject to One-Touch Transfer by Other Entities. An Attaching Entity's Communications Facilities shall be subject to the One-Touch Transfer Process conducted by another Attaching Entity or CPS Energy pursuant to the same terms and conditions prescribed in this Section IV.B.5 and the daily penalty found in Appendix H for failure to timely relocate a Wireless Installation.

6. <u>Make-Ready Communication Construction - Complex Transfers</u>.

a) <u>Responsibility for Complex Transfers.</u> The accomplishment of a Complex Transfer is considered part of Make-Ready Communication Construction and shall be performed by the Attaching Entity which owns the Attachment subject to transfer. It is the responsibility of the Attaching Entity requesting the Complex Transfer to negotiate a private process with the owning Attaching Entity for the Complex Transfer. The cost of the Complex Transfer shall be borne by the requesting Attaching Entity. Wireless Installations will not be subject to the Complex Transfer process as any modification or transfer of such facilities shall be subject to the Joint Meeting Transfer process described in Section IV.B.5.b.

b) <u>Complex Transfers Escalation Process</u>. In the event an Attaching Entity refuses to reach agreement on a process for the expedient transfer of an Attachment subject to a Complex Transfer, the requesting Attaching Entity may rely on the following escalation procedures. At any time during these escalation procedures, the requesting Attaching Entity and the owner of the Attachment subject to the Complex Transfer may reach agreement on a voluntary transfer process. In such event, the requesting Attaching Entity shall notify CPS Energy in writing of this agreement.

(i) Level 1: Initial Request for Complex Transfer (Days 0 to 30)

a. *<u>Initial Notice Letter</u>*. The requesting Attaching Entity shall provide written notice to owner of the Attachment subject to Complex Transfer requesting the transfer of such Attachment using NJUNS with a copy to CPS Energy. The Attaching Entity which owns such Attachment shall perform the transfer within thirty (30) calendar days of receipt of notice from the requesting Attaching Entity.

(ii) Level 2: Initial Escalation Process (Days 31 to 60)

a. *<u>Escalation Notification</u>*. If the owner fails to transfer the Attachment subject to Complex Transfer within the initial thirty (30) calendar days, the requesting Attaching Entity shall send a certified letter notifying the non-compliant Attaching Entity that failure to transfer the Attachment within a subsequent thirty (30) calendar days (escalation period) of receipt of notice will result in the Attachment in question being designated by CPS Energy as

non-compliant with the Complex Transfer Process and subject to penalty, as described in Appendix H, on the basis of interference with the requesting Attaching Entity's permitted Attachment rights. The requesting Attaching Entity shall send CPS Energy a copy of the escalation letter and all other correspondence between the parties related to this matter.

b. *Duty to Negotiate*. The requesting Attaching Entity is required to continue negotiations with the non-compliant Attaching Entity during the thirty (30) calendar day escalation period. Absent extraordinary circumstances, the non-compliant Attaching Entity's failure to transfer the Attachment subject to Complex Transfer by the end of the thirty (30) calendar day escalation period shall be considered a lack of cooperation on the part of the non-compliant Attaching Entity. Conversely, absent extraordinary circumstances, a refusal by the requesting Attaching Entity to agree to an alternative process for the transfer of the Attachment in question within a reasonable date certain shall be considered a lack of cooperation on the part of the requesting Attaching Entity.

c. *Notice of Success Complex Transfer*. If the non-compliant Attaching Entity transfers the Attachment subject to Complex Transfer within the thirty (30) calendar day escalation period, or the requesting Attaching Entity transfers the Attachment by mutual agreement of the parties, no further escalation will be necessary.

(iii) Level 3: CPS Energy Finding of Non-Compliant Attachments (Days 61 to 90)

a. *Request for Finding of Non-compliant Attachments*. If the requesting Attaching Entity and the non-compliant Attaching Entity cannot reach agreement and the other Attaching Entity fails to transfer the Attachment subject to Complex Transfer within the thirty (30) calendar day escalation period; the requesting Attaching Entity within five (5) calendar days thereafter shall notify CPS Energy in writing, provide a short summary of efforts to negotiate the rearrangement or transfer of the Attachment in question, and request CPS Energy to make a finding of Non-complaint Attachment on the basis of interference with the requesting Attaching Entity's permitted Attachment rights. The request shall

explain why the requesting Attaching Entity believes the non-compliant Attaching Entity is acting in bad faith.

b. *Notification of Non-Compliant Attachments*. Within ten (10) calendar days of receiving the request for a finding of non-compliant Attachments, CPS Energy will evaluate the request and if it finds the request credible; CPS Energy will:

(1) Notify the non-compliant Attaching Entity by certified mail that CPS Energy has determined the Attachment subject to Complex Transfer is declared as "Non-compliant Attachment";

(2) The non-conforming Attaching Entity will begin accruing penalties as provided in Appendix H of these Standards until the Non-compliant Attachment is transferred; and

(3) CPS Energy will suspend the processing of the non-compliant Attaching Entity's Applications effective five (5) days after receipt of the certified letter.

Thereafter, the non-compliant Attaching Entity will have fifteen (15) days in which to transfer the non-compliant Attachment and notify CPS Energy in writing in order to reinstate the processing of Applications. If the non-compliant Attaching Entity fails to transfer the non-compliant Attachment within the twenty (20) calendar day grace period, the non-compliant Attachment will be subject to further penalties and transfer as provided in Section III.E and Appendix H. CPS Energy will reinstate the processing of the non-compliant Attaching Entity's Applications upon receipt of written notification of the transfer of the non-compliant Attachment and the payment of all assessed penalties.

c. *Duty to Negotiate*. The requesting Attaching Entity is required to continue negotiations with the non-compliant Attaching Entity which owns the non-compliant Attachment during the twenty (20) calendar day grace period.

d. *Notice of Transfer*. If the non-compliant Attaching Entity transfers non-compliant Attachment within the twenty (20) calendar day grace period, or the requesting Attaching Entity transfers the non-

compliant Attachment by mutual agreement of the parties, the moving party shall notify CPS Energy by electronic message, CPS Energy shall reinstate processing of the other Attaching Entity's Applications within twenty-four (24) hours of receiving payment of all outstanding penalties.

e. *Stop Processing Pole Attachment Permit Applications*. If CPS Energy does not receive written notification of the transfer of the non-compliant Attachment by the end of the twenty (20) calendar day grace period, CPS Energy shall stop processing the non-compliant Attaching Entity's Applications pending further written notice of a successful transfer and the payment of all outstanding penalties.

(iv) Level 4: Transfer or Removal of Unauthorized Attachments (Days 91 and Beyond)

a. *Notification of Failed Transfer*. If the parties fail to negotiate the successful transfer of the non-compliant Attachment, the requesting Attaching Entity shall promptly notify CPS Energy in writing of the failed attempt and explain the reasons for the unsuccessful transfer.

b. *Notification of Transfer of Non-compliant Attachments*. Following receipt of the notification of failed transfer, CPS Energy shall promptly proceed to transfer the non-compliant Attachment at the respective owner's expense. Following the transfer of the non-compliant Attachment, CPS Energy will provide written notification of the transfer to the non-compliant Attaching Entity within twenty-four (24) hours. CPS Energy shall reinstate processing of the non-compliant Attaching Entity's Applications within twenty-four (24) hours of receiving payment for the transfer cost and all outstanding penalties.

c. *Notice of Transfer*. In the event the non-compliant Attaching Entity transfers the non-compliant Attachment, or the requesting Attaching Entity transfers the non-compliant Attachment by mutual agreement of the parties, prior to CPS Energy's transfer efforts, the moving party shall notify CPS Energy in writing. The non-compliant Attaching Entity shall be assessed a one-time fine as provided in Appendix H of these Standards. Thereafter, CPS

Energy shall reinstate the processing of the non-compliant Attaching Entity's Applications within twenty-four (24) hours of receiving payment of all outstanding penalties.

7. Notice of Attachment Completion and Acceptance.

The Attaching Entity shall notify CPS Energy in writing by submitting the Completion of Attaching Entity Construction form, a copy of which is available at *www.cpsenergy.com/poleattachments* and in Appendix B, within ten (10) calendar days following the acceptance by all Attaching Entities whose facilities were rearranged or transferred pursuant to Section IV.B.5 (Simple Transfers) and/or Section IV.B.6 (Complex Transfers) that all Make-Ready Communication Construction has been completed and accepted, and that the new Attachments and/or Overlashings and all Make-Ready Work are ready for CPS Energy to undertake Post-Construction Inspection.

8. Post-Construction Inspection.

a) Construction Subject to Inspection. CPS Energy shall complete a Post-Construction Inspection of applicable Make-Ready Work at the Attaching Entity's expense within thirty (30) calendar days of receiving the Attaching Entity's notification set forth in Section IV.B.7. CPS Energy will conduct the Post-Construction Inspections to evaluate compliance with the requested Permit, Applicable Engineering Standards, or other design and installation requirements. Completion of a Post-Construction Inspection by CPS Energy shall not in any way relieve any Attaching Entity or an Attaching Entity's insurers of any responsibility, duty, obligation, or liability under these Standards, any contractual agreement, or otherwise; nor does CPS Energy's ability to make Post-Construction Inspections relieve an Attaching Entity from its obligations to exercise due care in the installation of its Attachments or Overlashings. The Post-Construction Inspection provision set forth in this Section IV.B.8.a does not affect any other inspection requirements elsewhere in these Standards. This section IV.B.8 also applies to supplemental Post-Construction Inspections where the Attaching Entity reports "final corrections" of previously identified non-compliant work or locations as described in Section IV.B.8.b below.

b) Compliance. In the event a Post-Construction Inspection conducted pursuant to Section IV.B.8.a reveals that corrections or other actions are required of an

Attaching Entity, including without limitation those required for reasons of safety or structural integrity, the Attaching Entity shall make such required corrections or take the requested actions within thirty (30) calendar days after the date CPS Energy sends written notice. If CPS Energy determines in its reasonable judgment and discretion that the needed corrections rise to the level of an Emergency, CPS Energy may perform the necessary corrective work without providing notice, at the Attaching Entity's sole risk and cost plus ten-percent (10%). As soon as practicable thereafter, CPS Energy will advise the Attaching Entity of the work performed or the action taken.

c) Issuance of Permit. Upon satisfactory completion of the Post-Construction Inspection, CPS Energy shall notify the Attaching Entity in writing that CPS Energy has approved the Attachments identified in the Application by submitting to the Attaching Entity a Permit, a copy of which form is located in Appendix B, for the affected facilities.

C. Private Network Process

A high-level workflow of the Private Network Process for wire Attachments to CPS Energy Poles is illustrated in the Figure C below.

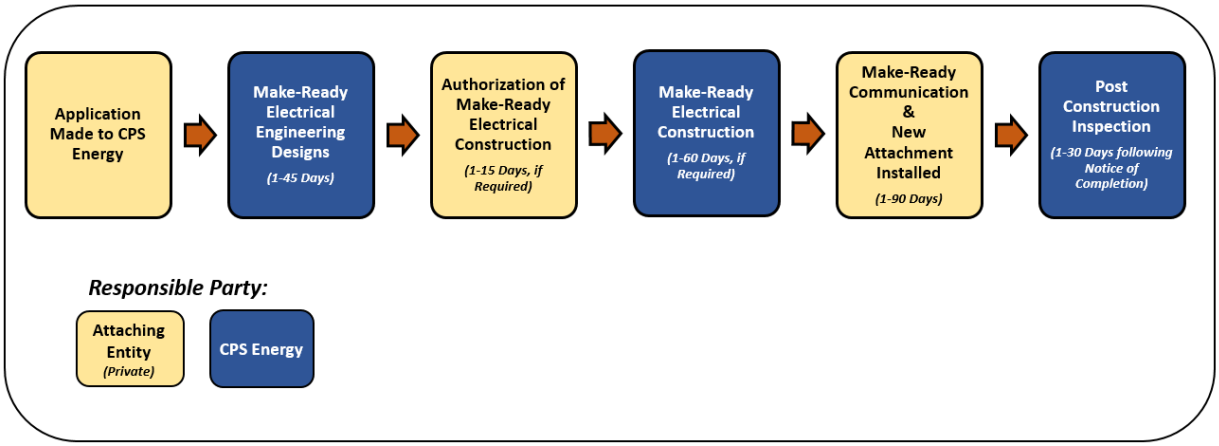

Figure C: Private Network Process

1. **<u>Eligibility</u>**. Any private entity or public organization, such as a school, university, or unit of local government that is an Attaching Entity, not engaged in providing competitive telecommunication services that operates an internal private network for its own private non-commercial communications purposes.

2. **<u>Application for Permit Required</u>.** An Attaching Entity who qualifies for the Private Network Process may choose either:

   a) <u>CPS Energy to Perform Make-Ready Engineering.</u> The Attaching Entity may request CPS Energy to undertake and complete the Make-Ready Engineering required by the Application request. If the Attaching Entity elects for CPS Energy to perform the Make-Ready Engineering, CPS Energy shall provide the Attaching Entity an estimated cost to prepare and complete the Make-Ready Engineering before starting the project. Upon approval to proceed, CPS Energy will respond to such Application requests as promptly as is reasonable, with a goal of providing a response within forty-five (45) calendar days of receipt of the Application. The Attaching Entity is still required to submit an Application and pay all applicable Applications Fees as described in Appendix H. CPS Energy will invoice the Attaching Entity for the cost to produce the Make-Ready Work in accordance with the provisions of Section II.I.3; or

b) Attaching Entity to Perform Make-Ready Engineering. The Attaching Entity may choose to complete its own Make-Ready Engineering by complying with all provisions of the Standard Process as described in Section IV.B.

3. CPS Energy Review of Application.

a) CPS Energy to Perform Make-Ready Engineering. If the Attaching Entity chooses to have CPS Energy complete the Make-Ready Engineering pursuant to Section IV.C.2.a, then CPS shall respond to the Application within forty-five (45) calendar days of receipt and provide the Attaching Entity with a detailed description of the proposed Make-Ready Work required for reasons of safety, reliability, or generally applicable engineering purposes.

b) Attaching Entity to Perform Make-Ready Engineering. If the Attaching Entity chooses to be responsible for its own Make-Ready Engineering pursuant to Section IV.C.2.b, then all provisions of Section IV.B.3 shall be applicable to CPS Energy's Review of Applications for Applications considered under the Standard Process – Small Entity process.

4. Make-Ready Electrical Construction. All provisions of Section IV.B.4 shall be applicable to Make-Ready Work Electrical Construction for Applications considered under the Private Network Process.

5. Make-Ready Communication Construction – One Touch Transfers. All provisions of Section IV.B.5 shall be applicable to Make-Ready Communications Construction for Applications considered under the Private Network Process regarding One-Touch Transfers.

6. Make-Ready Communication Construction - Complex Transfers. All provisions of Section IV.B.6 shall be applicable to Make-Ready Communications Construction for Applications considered under the Private Network Process regarding Complex Transfers.

7. Notice of Attachment Completion and Acceptance. All provisions of Section IV.B.7 shall be applicable to Notice of Attachment Completion and Acceptance for Applications considered under the Private Network Process.

8. Post Construction Inspection. All provisions of Section IV.B.8 shall be applicable to Post Construction Inspection for Applications considered under the Private Network Process.

D. Competitive Provider – Area Wide Network Deployment Process

A high-level workflow of the Competitive Provider – Area Wide Network Deployment Process for wire Attachments to CPS Energy Poles is illustrated in the Figure D below.

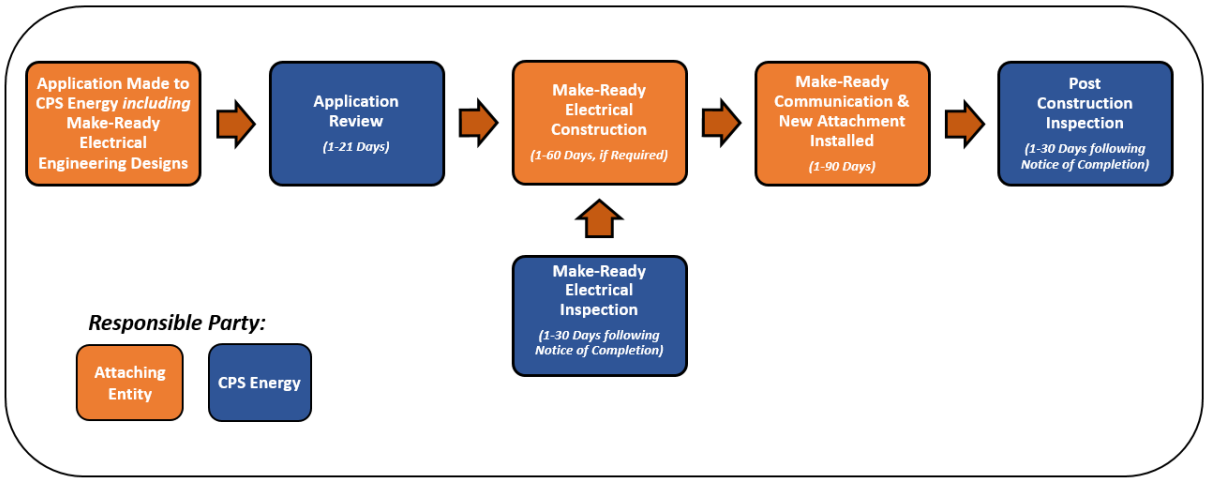

Figure D: Competitive Provider – Area Wide Network Deployment Process

1. **<u>Eligibility</u>**. An Attaching Entity that is a Competitive Providers with a valid Pole Attachment Agreement who is engaged in an Area Wide Network Deployment and has provided CPS Energy a Deployment Plan which contemplates an estimated eighty (80) or more Pole replacements per month during the majority of the Development Plan period shall be required to comply with the Competitive Provider – Area Wide Network Deployment Process.

2. **<u>Application for Permit Required</u>.** All provisions of Section IV.B.2 shall be applicable for Applications considered under the Competitive Provider – Area Wide Network Deployment Process.

3. **<u>CPS Energy Review of Application.</u>** All provisions of Section IV.B.3 shall be applicable for CPS Energy's Review of Applications considered under the Competitive Provider – Area Wide Network Deployment Process.

4. **Make-Ready Electrical Construction.** An Attaching Entity that qualifies for the Competitive Provider – Area Wide Network Deployment Process per Section IV.D.1 above will be authorized by CPS Energy to perform all necessary Make-Ready Work, including Make-Ready Electrical Construction using contractors approved by CPS Energy to perform such work, contingent upon the Attaching Entity entering into a construction contract with CPS Energy. Pursuant to this Section IV.D.4, the Attaching Entity shall be responsible for obtaining all materials and work at Attaching Entity's risk and expense for all Make-Ready Electrical Construction, except as provided in Section IV.B.5.f.

a) Construction Completion Time. The Attaching Entity shall complete Make-Ready Electrical Construction within sixty (60) calendar days of receiving CPS Energy's approval of an Application. Should the Attaching Entity fail to complete Make-Ready Electrical Construction within the sixty (60) calendar period following the approval of the Application, CPS shall consider the Application cancelled.

(i) For the initial stages of a Network Deployment Process project, the time required to start Make-Ready Electrical Construction may be extended by CPS Energy up-to one hundred twenty (120) calendar days to allow for an efficient ramp-up transition during the initial six (6) months of the Network Deployment project.

(ii) To qualify for this extension, the Attaching Entity must provide CPS Energy a written request for extension and a construction schedule for the first six (6) months of the project. After reviewing this schedule, CPS Energy will provide written notice that the extension is either approved, rejected, or modified, including CPS Energy's rationale for such decision. If CPS Energy rejects or modifies the extension request, CPS Energy will call for a meeting with the Attaching Entity to discuss the extension and strive to reach agreement.

b) Workmanship. All of the Attaching Entity's Make-Ready Electrical Construction shall be performed at the Attaching Entity's sole cost and expense, shall be installed in a good and workmanlike manner, and must not adversely affect the structural integrity of CPS Energy's Poles, Streetlight Poles, CPS Energy Facilities, or the Communication Facilities of other Attaching Entities attached thereto. All such Make-Ready Electrical Construction work is subject to inspection and/or observation by CPS Energy

or its designee at any time as further described in these Standards and in the Construction Agreement.

c) Operational Procedures. After reviewing the Deployment Plan and at any time during the deployment project, CPS Energy and the Attaching Entity shall develop a set of mutually agreeable operational procedures addressing items such as, but not limited to: customer outage notifications, contractor crew work location notifications, contractor safety reporting, material procurement, customer complaints, or other operational needs specific to the Attaching Entity's Deployment Plan. These operational procedures shall include provisions for updating, enforcement, and conflict resolution as required.

d) Qualified Employees. All of the Attaching Entity's Make-Ready Electrical Construction performed on CPS Energy's Poles, Streetlight Poles, and/or in the vicinity of other CPS Energy Facilities shall be in compliance with all provisions of the Construction Contract referenced in this Section IV.D.4. The Attaching Entity shall assure and certify to CPS Energy that any person working in the Electric or Supply Space on Poles, Streetlight Poles, and/or CPS Energy Facilities is fully qualified to undertake and complete the work contemplated and is familiar with all Applicable Engineering Standards including all provisions of these Standards and the Construction Contract.

e) Multiple Requests for Pole. In the event multiple Attaching Entities have been granted Permits to access the same Pole, the applicable provisions of Section IV.B.3.f shall apply. However, should a disagreement exist between the Attaching Entities as to construction and installation schedules; CPS Energy shall require a representative of each Attaching Entity who has authority to agree on these issues to attend a meeting called by CPS Energy to discuss and attempt to reach agreement on this dispute. In the event the Attaching Entities are unable to so agree, then the applicable provisions of Section II.L shall apply.

f) Construction Scheduling. Before beginning Make-Ready Electrical Construction on a Pole, Streetlight Pole, or series of poles; CPS Energy and the Attaching Entity shall develop a mutually agreed construction schedule and methodology providing for notice of the Pole locations, proposed dates on which work will commence and finish, and whether any electrical service interruptions or de-energizations will be required. CPS Energy approval is

required for all outages, such approval not to be unreasonably withheld, conditioned or delayed; contingent upon the reliability needs of the CPS Energy electric system.

THE ATTACHING ENTITY SHALL INDEMNIFY AND HOLD HARMLESS CPS ENERGY AND ITS TRUSTEES, OFFICERS, EMPLOYEES, AGENTS, CONTRACTORS, AND REPRESENTATIVES FROM ALL CLAIMS FOR LOSS, HARM, PROPERTY DAMAGE, AND BODILY INJURY OR DEATH IN CONNECTION WITH ANY WORK PEFORMED IN CONNECTION WITH THESE STANDARDS.

g) Materials. The Attaching Entity shall furnish all necessary materials and hardware including but not limited to: poles, crossarms, mounting hardware, guys, anchors, insulators, conductors, and any associated miscellaneous hardware necessary to complete the Make-Ready Electrical Construction in compliance with the Applicable Engineering Standards and the construction contract between the parties. CPS Energy shall provide any required transformers and other special equipment to be identified in said construction contract. All materials to be provided by and used by the Attaching Entity for Make-Ready Electrical Construction on CPS Energy poles and other facilities shall be obtained from vendors approved by CPS Energy and shall be new and of good quality, free from known material defects, and shall comply with all applicable CPS Energy specifications. CPS Energy shall not unreasonably withhold, delay or condition its approval of a vendor.

All materials obtained by the Attaching Entity will be subject to an additional quality check to be performed by the Attaching Entity at the site, prior to use. At CPS Energy's option, all materials obtained by Attaching Entity shall be subject to inspection by CPS Energy on reasonable notice to the Attaching Entity; provided that such inspection will be completed in accordance with the Attaching Entity's construction schedule, discussed in Section IV.D.4.f, and will not unreasonably delay such schedule.

h) CPS Energy Property. All poles, materials, and other equipment installed as part of the Make-Ready Electrical Construction under this Area Wide Network Deployment Process, with the exception of Communication Facilities installed by the Attaching Entity for use in its provision of services, shall become and remain CPS Energy's sole property, regardless of which

entity procured, installed, or paid for it. The Attaching Entity shall execute any documents reasonably requested by CPS Energy to evidence the transfer of title to such poles, materials, and equipment to CPS Energy, and the Attaching Entity shall brand and tag all new poles to indicate CPS Energy ownership.

The Attaching Entity's performance of Make-Ready Electrical Construction or payment of any costs associated with such work:

- Shall in no way create or vest in the Attaching Entity any ownership right, title, or interest in any pole or electrical facilities;
- Shall not entitle the Attaching Entity to any offsets, credits, payments, or income from CPS Energy's operation of the pole or facilities;
- Alter or affect CPS's rights under these Standards; or
- Restrict CPS Energy's ability to allow access to other Attaching Entities in accordance with these Standards.

(i) Disposal/Salvage of Materials. CPS Energy will provide a list of all equipment and/or materials which the Attaching Entity may remove from service as a result of undertaking and completing Make-Ready Electrical Construction pursuant to this Section IV.D.4 which CPS Energy requires to either be salvaged by CPS Energy or disposed of by the Attaching Entity at Attaching Entity's expense. Equipment and/or materials that are to be salvaged or recycled by CPS Energy are to be delivered at a place determined by CPS Energy. All equipment and/or materials which are to be disposed of by the Attaching Entity shall be handled in a manner consistent with all applicable federal, state, and local laws, rules, and regulations. Copies of all applicable disposal manifests shall be provided to CPS Energy on a monthly basis during the course of the Attaching Entity's performance of Make-Ready Electrical Construction.

i) Notification to CPS Energy. Following the Attaching Entity's completion of Make-Ready Electrical Construction, the Attaching Entity will promptly notify CPS Energy in writing by submitting the Completion of Attaching Entity Construction form, a copy of which is available at *www.cpsenergy.com/poleattachments* and in Appendix B, within five (5) calendar days from completion of the Make-Ready Electrical Construction.

j) Make-Ready Electrical Construction Inspection. CPS Energy shall inspect, at Attaching Entity's expense, Attaching Entity's Make-Ready Electrical Construction at any time, but no later than thirty (30) calendar days following receipt of the Attaching Entity's notification set forth in Section IV.D.4.i. CPS Energy will conduct these inspections to evaluate compliance with the Application's design and installation requirements and evaluate compliance with the Applicable Engineering Standards and the construction contract between the parties. The completion of an inspection by CPS Energy shall not operate in any way to relieve Attaching Entity, its contractors, or its insurers of any responsibility, duty, obligation, or liability under these Standards, any contractual agreement, or otherwise; nor does CPS Energy's ability to make inspections relieve the Attaching Entity from its obligations to exercise due care in the completion of Make-Ready Electrical Construction. The inspection right set forth in this Section IV.D.4.j does not affect any other inspection rights afforded CPS Energy under these Standards and as pole owner.

k) Corrective Action. In the event an inspection conducted pursuant to Section IV.D.4.j reveals that corrections or other actions are required of the Attaching Entity, including without limitation those required for reasons of safety or structural integrity, the Attaching Entity shall make such required corrections or take the requested actions within fifteen (15) calendar days after the date CPS Energy sends written notice. If CPS Energy determines in its reasonable judgment and discretion that the needed corrections rise to the level of an Emergency, CPS Energy may perform the corrective work without providing notice, at the Attaching Entity's sole cost and risk plus ten-percent (10%).

l) Notice to Proceed. Following approval of the Make-Ready Electrical Construction, CPS Energy will issue a CPS Energy Notice to Proceed, a form of which is provided in Appendix B, to the Attaching Entity (applicant) in writing that the Pole(s) is available for Make-Ready Communications Construction and Attachment. When applicable, the Attaching Entity shall proceed to install its Attachments utilizing the One-Touch Transfer Process described in Section IV.B.5. Whenever the transfer of an Attachment or Wireless Installation would requires cutting or splicing of the Communication Facility or disruption of wireless service, the Complex Transfer Process in Section IV.B.6 shall apply.

m) Failure to Attach. An Attaching Entity must exercise the right granted by the CPS Energy Notice to Proceed within ninety (90) calendar days of issuance. If needed, the Attaching Entity may request in writing to CPS Energy an additional thirty (30) calendar day extension of the effective period of the Notice to Proceed. The request for this extension must be received by CPS Energy no later than seven (7) calendar days before the expiration date provided in the Notice to Proceed. In considering this request, CPS Energy will review past construction practices of the Attaching Entity and current efforts underway to complete the installation for which the extension is requested. CPS Energy will provide a written response to the request for extension within three (3) calendar days of receipt. CPS Energy, at its discretion, may deny any requests for extension received within seven (7) calendar days of the expiration of the Notice to Proceed.

5. **Make-Ready Communication Construction – One Touch Transfer.** All provisions of Section IV.B.5 shall be applicable to Make-Ready Communications Construction for Applications considered under the Competitive Provider – Area Wide Network Deployment Process regarding One-Touch Transfers.

6. **Make-Ready Communication Construction - Complex Transfers.** All provisions of Section IV.B.6 shall be applicable to Make-Ready Communications Construction for Applications considered under the Competitive Provider – Area Wide Network Deployment Process regarding Complex Transfers.

7. **Notice of Attachment Completion and Acceptance.** All provisions of Section IV.B.7 shall be applicable to Notice of Attachment Completion and Acceptance for Applications considered under the Competitive Provider – Area Wide Network Deployment Process.

8. **Post Construction Inspection.** All provisions of Section IV.B.8 shall be applicable to Post Construction Inspection for Applications considered under the Competitive Provider – Area Wide Network Deployment Process.

E. Competitive Provider – Network Upgrade Process

1. **Eligibility**. An Attaching Entity that is a Competitive Provider with a valid Pole Attachment Agreement who is engaged in a significant network upgrade and has provided CPS Energy with a Deployment Plan shall be required to comply with the Competitive Provider – Network Upgrade Process (Network Upgrade Process).

2. **Choice of Process.** Attaching Entities who qualifying to install Attachments under the Network Upgrade Process shall be provided the choice of either:

   a) Choose to have CPS Energy complete the Make-Ready Electrical Construction; thereby the Attaching Entity shall operate under the Competitive Provider – Standard Process for Attachments as described in Section IV.B; or

   b) Choose to be responsible for the Make-Ready Electrical Construction; thereby the Attaching Entity shall operate under the Competitive Provider – Area Wide Network Deployment Process for Attachments as described in Section IV.D.

3. **Written Notice of Choice**. The Attaching Entity qualifying for the Network Upgrade Process shall provide CPS Energy written notice of its decision pursuant to Section IV.E.2 as soon as practical, but no less than three (3) months before submitting the first Application as part of its Deployment Plan. The Attaching Entity' choice of process will be irrevocable during the period as specified in the Deployment Plan provided the Attaching Entity remains qualified for the Network Upgrade Process per Section IV.E.1.

F. Competitive Provider – Standard Process for Overlashing Existing Attachments

1. **Eligibility**. Default process for any Attaching Entity with a valid Pole Attachment Agreement that is a Competitive Provider engaged in Overlashing existing Attachments.

2. **2.** **Application for Permit Required.** All provisions of Section IV.B.2 shall be applicable to Applications considered under the Competitive Provider – Standard Process for Overlashing Existing Attachments, except as provided below:

a) An Attaching Entity may Overlash its own Attachments where the facilities comprising the Overlashing and Attachment do not exceed a combined total of three and one-half inches (3.5") in diameter, such Overlashing fully complies with the Applicable Engineering Standards, and no Make-Ready Electrical Construction is required. In such cases, the Attaching Entity shall provide CPS Energy with five (5) calendar days' prior written notice of the Overlashing and its compliance with the requirements set forth in this Section IV.F.2.a.

b) For Overlashing and Attachments that will exceed a combined total of three and one-half inches (3.5") in diameter, CPS Energy requires ten (10) calendar days' notice before installation and its compliance with the requirements set forth in Section IV.F.2.a.

c) An Attaching Entity shall be permitted to Overlash its own Attachments without prior written notice or submitting an Application to CPS Energy in the event such Overlashing is necessary to restore service temporarily to the Attaching Entity's customers and is in compliance with the Applicable Engineering Standards. In such cases, the Attaching Entity shall provide CPS Energy with written notice of the Overlashing with ten (10) calendar days of its completion.

d) Such notice as required in Section IV.F.2.a, Section IV.F.2.b, and Section IV.F.2.c above will be provided using the CPS Energy Application for Pole Attachment Form, provided in Appendix B and available at *www.cpsenergy.com/poleattachments* and shall identify:

(i) Application Form specifying the Poles and Attachments subject to Overlashing;

(ii) Total diameter and estimated weight of the existing Communications Facilities subject to Overlash;

(iii) Diameter and estimated weight of the added Communications Facilities;

(iv) Owner of the Communication Facilities;

(v) Total estimated diameter and weight of the Communications Facilities after the Overlash;

(vi) Applicable PLA documents, if any; and

(vii) Applicable Make-Ready Electrical Construction engineering design documents, if any.

3. **CPS Energy Review of Application.** All provisions of Section IV.B.3 shall be applicable to Applications considered under the Competitive Provider – Standard Process for Overlashing Existing Attachments, except as provided below:

a) Where no Make-Ready Electrical Construction is required, CPS Energy shall review and provide written Notices to Proceed in accordance with the provisions of Section IV.F.2.a and Section IV.F.2.b above.

b) Where Make-Ready Electrical Construction is required, the provisions of Section IV.B.3 shall apply.

4. **Make-Ready Electrical Construction.** If required, all provisions of Section IV.B.4 shall be applicable to Make-Ready Work Electrical Construction for Applications considered under the Competitive Provider – Standard Process for Overlashing Existing Attachments.

5. **Make-Ready Communication Construction – One Touch Transfers.** If required, all provisions of Section IV.B.5 shall be applicable to Make-Ready Communications Construction for Applications considered under the Competitive Provider – Standard Process for Overlashing Existing Attachments regarding One-Touch Transfers.

6. **Make-Ready Communication Construction - Complex Transfers.** If required all provisions of Section IV.B.6 shall be applicable to Make-Ready Communications Construction for Applications considered under the Competitive

Provider – Standard Process for Overlashing Existing Attachments regarding Complex Transfers.

7. **Notice of Attachment Completion and Acceptance.** All provisions of Section IV.B.7 shall be applicable to Notice of Attachment Completion and Acceptance for Applications considered under the Competitive Provider – Standard Process for Overlashing Existing Attachments.

8. **Post Construction Inspection.** All provisions of Section IV.B.8 shall be applicable to Post Construction Inspection for Applications considered under the Competitive Provider – Standard Process for Overlashing Existing Attachments.

V. SPECIFICATIONS FOR WIRELESS INSTALLATIONS

A. Wireless Installation Application Process

CPS Energy offers Attaching Entities full access to Streetlight Poles and access to distribution Poles, subject to certain restrictions and Make-Ready Work requirements, for the purpose of attaching Wireless Installations pursuant to the Application processes outlined in Figure E listed below. The technical specifications for Wireless Installations are found in Appendix D, Appendix G, and Appendix I. Additional information, including the Application Forms for a Wireless Installation, may be downloaded at *www.cpsenergy.com/poleattachments*.

Process Step	Standard Process for Wireless Installations
Process Criteria	Default Process for Competitive Providers, CMRS Providers, & Infrastructure Providers
Make-Ready Electrical Engineering (MREE)	Attaching Entity
Application Review Period	*30 Days*
Make-Ready Electrical Construction (MREC)	CPS Energy
Make-Ready Wireless Installation Construction (MRWIC): 1-Touch Transfer-Simple	Attaching Entity
MRWIC: Complex-Transfer	Attaching Entity
Post-Construction Inspections	CPS Energy
Control over Contractors	Attaching Entity & CPS Energy

Figure E: Wireless Installation Application Process

B. Standard Process for Wireless Installations

A high-level workflow of the Application review process, provided the Wireless Installation system has completed the Pre-Certified Equipment process pursuant to Section III.A.14, for the Standard Process for Wireless Installations on CPS Energy Poles or Streetlight Poles is illustrated in Figure F below.

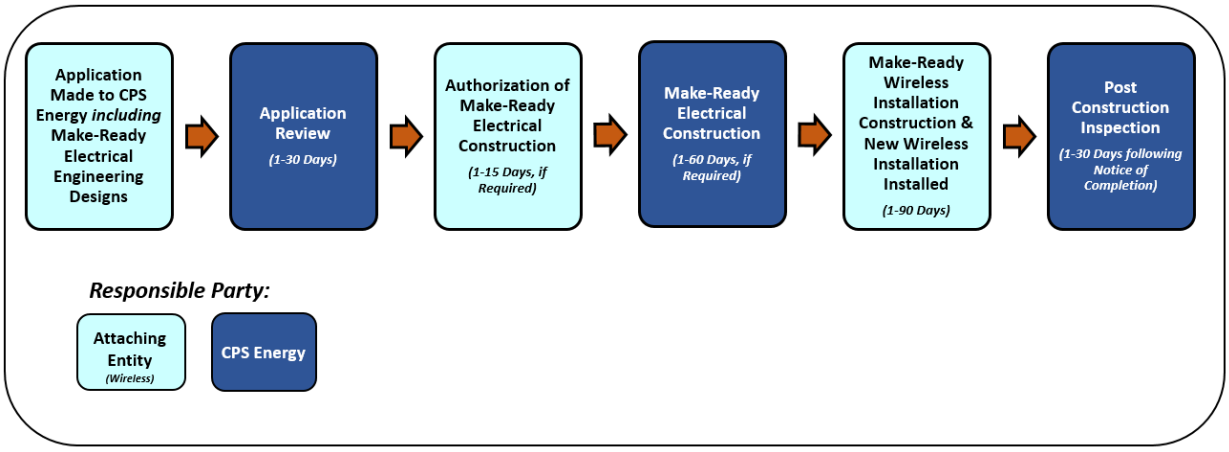

Figure F: Standard Process for Wireless Installations following Pre-Certification

1. **Eligibility**. Any Attaching Entity with a valid Wireless Installation Agreement that is a Competitive Provider, CMRS Provider, or Infrastructure Provider.

2. **Application for Permit Required.** An Attaching Entity shall not install any new Wireless Installation on any CPS Energy Pole or Streetlight Pole without first submitting an Application and obtaining a Permit pursuant to the requirements and procedures set forth below and elsewhere in these Standards.

   a) Application Form. All Attaching Entities shall use the Application for Wireless Installation Form, provided in Appendix B and available for download at www.cpsenergy.com/poleattachments, which may be amended from time to time, provided that any such amendments are consistent with Applicable Engineering Standards and are applied to similar types of Wireless Installations and similarly situated Attaching Entities on a non-discriminatory basis.

(i) A single Application may include up to a maximum of thirty (30) Wireless Installation locations, together with the applicable Poles and/or Streetlight Poles, provided that the Wireless Installations are of similar design at each of the locations within the identified boundaries of a Wireless Project Area and consist of Pre-Certified Equipment.

(ii) CPS Energy's acceptance of the submitted design documents required as part of a complete Application Form (Section V.B.2.d) does not relieve the Attaching Entity of full responsibility for any errors and/or omissions in the engineering analysis and compliance with all Applicable Engineering Standards.

b) Pole Ownership. For the purposes of Application submittal, unless CPS Energy records and/or Poles indicate otherwise, CPS Energy shall be presumed to be the owner all Poles subject to Attachment. The Attaching Entity is responsible for field verifying Pole ownership and notifying CPS Energy of any discrepancies between CPS Energy's maps/records and the actual Poles in the field.

c) Compliance with Standards. Attaching Entity shall comply with the Texas Engineering Act at Section 1001.001, et seq., of the Texas Occupations Code to the extent it is applicable to the work described herein, and with the most current version of the National Electrical Safety Code (NESC), including any and all revisions to both, and all other Applicable Engineering Standards. The Attaching Entity shall certify its compliance with the above on each Application it submits to CPS Energy for processing. The certification statement shall be signed by an employee or agent of the Attaching Entity who has the final authority or responsibility to approve the Application. CPS Energy will not process an Application that fails to provide the signed certification statement included therein. The Attaching Entity shall provide documentation, sealed by an Engineer, establishing that the Attaching Entity's applicable Make Ready Electrical Construction design and Pole Loading Analysis (PLA) documents comply with all requirements specified by the NESC and the Applicable Engineering Standards.

(i) *Pole Loading Analysis (PLA)*. An Attaching Entity, in connection with an Application, must comply with the PLA methodology described herein and in Appendix G. Acceptable software for use of PLA shall be a commercially available product with general industry acceptance. Should the Attaching Entity utilize a commercially available software application that CPS Energy does not possess; the Attaching Entity shall make available to CPS Energy at least one software license for CPS Energy use at the Attaching Entity's expense, subject to CPS Energy's Information Technology requirements. The Attaching Entity will gather the pole and Attachment physical and technical information required to conduct a PLA on Poles that meet the criteria for PLA as described in Appendix G, with assistance as required from CPS Energy.

d) Submission of Application. Completed Applications may be submitted by either U.S. mail, electronically to ***poleapplications@cpsenergy.com***, or other means mutually agreeable by CPS Energy and the Attaching Entity. The Application shall include:

(i) A complete Application with all applicable supporting documents, tests, reports, applications, permit numbers, and license numbers;

(ii) A copy of an approved Request for Pre-Certification of Wireless System form for the type of Wireless Installation proposed;

(iii) A copy of the Safety Briefing for the type of Wireless Installation proposed;

(iv) Engineering design documents created using the ANSI/SCTE Graphic Symbols Drawing Standards, prepared or reviewed by an Engineer, and including a detail description of the Wireless Installation in compliance with all Applicable Engineering Standards, all detailed design documents for any required Make-Ready Electrical Construction, and the Attaching Entity's estimated cost of any proposed Make-Ready Electrical Construction;

(v) The proposed deployment plan for the proposed Wireless Project Area, including a description of how the Wireless Installation will be served with electricity and backhaul broadband telecommunications transport service;

(vi) A copy of an approved CPS Energy application for electric service showing the electricity account number for the Wireless

Installation, or a CPS Energy letter identifying an existing electricity account number that will service the Wireless Installation upon completion of construction;

(vii) Report certifying compliance with FCC OET Bulletin 65 signage requirements and the location of such signage on the pole, if applicable;

(viii) PLA worksheets and results, as required by Appendix G;

(ix) Relevant pole identification data and equipment tagging information; and

(x) If applicable, a Waiver Request form, as described in Section III.A.6.

Such Application shall be prepared by, or under the authority of, the Attaching Entity. The detailed design documents" referenced in this Section V.B.2.d.iv will be undertaken and completed in design tools to be determined by CPS Energy. All actions pursuant to this Section V.B.2.d shall be at the Attaching Entity's cost and risk.

CPS Energy shall invoice the Attaching Entity the appropriate Application Fee pursuant to Section II.I.2 and Appendix H.

3. **CPS Energy Review of Application.** CPS Energy will respond to each completed Application and Make-Ready Engineering design documents submitted by the Attaching Entity within thirty (30) calendar days of receipt. Should CPS Energy be required to return an Application for clarification or modification, the time required for the Attaching Entity to address the concerns raised and return the Application shall not count against the thirty (30) calendar day period. An Application for a Mid-span Installation requiring a supporting Overlash installation provided by the Attaching Entity will be considered by CPS Energy pursuant to Section IV.F. An Application for a DAS System requiring supporting new Attachments for fiber backhaul transport facilities will be considered by CPS Energy pursuant to Section IV.B. Any Application that does not conform to the requirements provided in Section V.B.2.d and the Applicable Engineering Standards will be deemed incomplete and immediately rejected by CPS Energy. If an Application is rejected as incomplete, the Attaching Entity will be provided with a detailed description of changes, modifications, or revisions to the Application necessary for CPS Energy's review and approval within ten (10) calendar days of receipt of the Application.

In the event CPS Energy does not finalize its review of a complete Application within thirty (30) calendar days, CPS Energy may impose a one-time, additional ten (10) calendar day extension period in which to complete its review for each Application. CPS Energy shall provide the Attaching Entity with seven (7) calendar days' prior notice that it intends to exercise its option to impose the extension period. A Wireless Installation shall never be installed without the affirmative written consent of CPS Energy and issuance of a Permit.

a) Review. In making its decision as to whether to issue a Permit, CPS Energy will consider engineering and safety requirements, in accordance with the Applicable Engineering Standards set forth in Section II.A.4. In addition, CPS Energy shall consider Capacity constraints, including the future needs of CPS Energy as determined in accordance with the Reserved Capacity provisions set forth in Section II.H.10, flood zone requirements, in-flight CPS Energy projects, and other circumstances known at the time that would directly affect the engineering, safety requirements, and Capacity constraints associated with desired pole. Specifically, CPS Energy will not consider a pole mounted Wireless Installation on a Pole or Streetlight Pole subject to a pending Wireless Installation Application or which is already hosting a Wireless Installation. Other Capacity constraints may impact approval of a Wireless Installation Application as described in Section V.B.3.f below.

b) Make-Ready Electrical Construction. In the event that an Attaching Entity's proposed Application requires CPS Energy to undertake and complete Make-Ready Electrical Construction to accommodate the Attaching Entity's Application, CPS Energy will review the detailed design documents and the cost estimate for this Make-Ready Electrical Construction work provided by the Attaching Entity. Following CPS Energy's approval of the Make-Ready Electrical Construction design and review of the estimated Make-Ready Electrical Construction costs, CPS Energy may, at its discretion, revise the cost estimate to more accurately reflect the anticipated cost of the work. CPS Energy will then submit this estimate of the cost of Make-Ready Electrical Construction to the Attaching Entity utilizing the CPS Energy Authorization for Make-Ready Work form, provided in Appendix B, for approval from the Attaching Entity to proceed. The Attaching Entity shall approve the make advanced payment of this cost estimate in order for any Make-Ready Electrical Construction to procced in accordance with the provisions of Section II.I.3. The Attaching Entity shall have fifteen (15) calendar days

following the issuance of the CPS Energy Authorization for Make-Ready Work form to approve the estimate and provide payment. Failure of the Attaching Entity to respond to CPS Energy or return the CPS Energy Authorization for Make-Ready Work form within the fifteen (15) calendar day period will result in the Application being cancelled by CPS Energy, with all applicable Application Fees being non-refundable.

c) Changes Required. If CPS Energy describes any changes, modifications, or revisions to the proposed Make-Ready Electrical Construction design documents pursuant to this Section V.B.3, CPS Energy shall notify the Attaching Entity in writing. Upon receipt of such notice, the Attaching Entity may notify CPS Energy in writing that it agrees to the changes, modifications, or revisions to the proposed Make-Ready Electrical Construction required by CPS Energy, in which case the Attaching Entity may resubmit the Application as amended and it shall be deemed granted; or the Attaching Entity may propose alternative changes, modifications, or revisions consistent with Applicable Engineering Standards by resubmitting the Application with such other alternative proposals, provided that such resubmission explains the reasons for the alternative proposals and addresses all concerns raised by CPS Energy in response to the initial Application. The alternative proposals shall not be the original Make-Ready Engineering design documents rejected by CPS Energy.

The Attaching Entity shall incur an Application Fee upon resubmitting the Application containing the alternative proposals. CPS Energy shall have thirty (30) calendar days of receipt thereof to provide the Attaching Entity with:

(i) Notification that access is granted based on the alternative proposals; or

(ii) A detailed description of any changes, modifications, or revisions to the alternative proposal necessary to comply with safety, reliability, or generally applicable engineering practices or standards.

In the event CPS Energy fails to complete its review within thirty (30) calendar days of the resubmitted Application containing the alternative proposals for Make-Ready Electrical Construction, CPS Energy may impose an additional ten (10) calendar day extension period in which to complete its review of the resubmitted Application. CPS Energy shall provide the Attaching Entity with seven (7) calendar days' prior notice that it intends to

exercise its option to impose the extension period. A Wireless Installation shall never be installed without the affirmative written consent of CPS Energy and the issuance of a Permit.

d) Compliance by Attaching Entity. CPS Energy's acceptance of the submitted Make-Ready Electrical Construction design and engineering documents does not relieve the Attaching Entity from compliance with the requirements of the Texas Engineering Act, the National Electrical Safety Code, and all other Applicable Engineering Standards as required by this Standard.

e) Application Approval.

(i) *If Make-Ready Electrical Construction is Required*. After acceptance of all necessary revisions, CPS Energy will issue to the Attaching Entity the CPS Energy Authorization for Make-Ready Work, a copy of which is in Appendix B. The Attaching Entity shall comply with the provisions of Section V.B.4.

(ii) *If Make-Ready Electrical Construction is Not Required*. After acceptance of all necessary revisions to the Application, CPS Energy will issue to the Attaching Entity the CPS Energy Notice to Proceed, a copy of which is in Appendix B. The Attaching Entity shall comply with the provisions of Section V.B.4.e.

f) Treatment of Multiple Requests for Poles in the Same General Area. CPS Energy will not authorize more than one Wireless Installation per Pole or Streetlight Pole. Pole assignments for Wireless Installation Applications shall be considered on a "first-come, first-served", non-discriminatory basis. Should an Attaching Entity fail to install a Wireless Installation within the allotted time frame, the requested pole will be released and made available to another Attaching Entity upon request as further described in Section V.B.3.g.i below. Multiple requests to install Wireless Installations in the same general area will be treated as described Section V.B.3.g.ii below. The treatment of Mid-span Installations and DAS System Antenna node installations in potential conflict with other Wireless Installations is described in Section V.B.3.g.iii and Section V.B.3.g.iv.

(i) If CPS Energy issues a Permit and the Attaching Entity fails to install the Wireless Installation in compliance with Section V.B.4.f, CPS Energy will release the requested Pole or Streetlight Pole to another

Attaching Entity that may have expressed an interest in the affected pole.

(ii) In situations where CPS Energy receives multiple Wireless Installation Applications for Poles or Streetlight Poles within the same general area from different Attaching Entities, CPS Energy will limit an Attaching Entity to only one Wireless Installation for every six (6) contiguous Poles and/or Streetlight Poles. Under no circumstances, will an Attaching Entity be allowed to reserve a pole for future use.

(iii) Regarding Applications for Mid-span Installations, CPS Energy will not allow more than one (1) such installation between any two (2) contiguous distribution Poles. Mid-span Installations shall not be installed on any Attachments suspended from Streetlight Poles. A pole-mounted Wireless Installation may be installed on a Pole that hosts an Attachment that supports a Mid-span Installation.

(iv) Regarding a DAS System, an Antenna node shall not be attached on a Pole or Streetlight Pole that already hosts a pole-mounted Wireless Installation and vise-versa. A Mid-span Installation may be clamped onto an Attachment that is installed on a Pole that hosts a DAS System Antenna node.

4. **Make-Ready Electrical Construction.** If Make-Ready Electrical Construction is required to accommodate a Wireless Installation, CPS Energy or its contractors shall perform such work at Attaching Entity's expense as provided in Section V.B.3, Section V.B.5.e, and Appendix B.

a) Advance Payment. Upon execution of CPS Energy Authorization for Make-Ready Work by an Attaching Entity, CPS Energy shall schedule the Make-Ready Electrical Construction. Pursuant to Sections II.I.3, CPS Energy shall require payment in advance for any Make-Ready Electrical Construction, to be performed by CPS Energy or its contractors based upon the estimated cost of such work.

b) Work Performed by CPS Energy or CPS Energy Contractor. Make-Ready Electrical Construction shall be performed only by CPS Energy and/or a contractor authorized by CPS Energy to perform such work. CPS Energy will strive to perform the Make-Ready Electrical Construction to accommodate an Attaching Entity's Wireless Installation within sixty (60) calendar days of receipt of the advanced payment estimate for the Make-Ready Electrical

Construction. CPS Energy shall provide to the Attaching Entity as soon as possible the estimated schedule for completing the Make-Ready Electrical Construction. In the event that CPS Energy is unable to complete the Make-Ready Electrical Construction within the sixty (60) calendar day period, an Attaching Entity may request in writing to CPS Energy the use of temporary Wireless Installation by submitting a Request for Temporary Attachment form, a copy of which is available at *www.cpsenergy.com/poleattachments* and located in Appendix B. Upon receiving this written request, CPS Energy shall coordinate with the Attaching Entity on a non-discriminatory basis to determine all reasonable means to accommodate the temporary Wireless Installation request subject to compliance with the Applicable Engineering Standards.[13] Any temporary Wireless Installations must be removed and properly installed upon the completion of the Make-Ready Electrical Construction. The cost to install and remove a temporary Wireless Installation shall be borne by the Attaching Entity.

c) Work Schedule. In performing all Make-Ready Electrical Construction to accommodate an Attaching Entity's Wireless Installations, CPS Energy will include such work in its normal work schedule on a non-discriminatory basis. In the event the Attaching Entity requests that the Make-Ready Electrical Construction be performed on a priority basis or outside of CPS Energy's normal work hours, the Attaching Entity shall pay the appropriate increased costs. Nothing herein shall be construed to require performance of any Attaching Entity's work before other scheduled work, CPS Energy service restoration, or other Emergency work.

d) Notifying Other Attaching Entities. Prior to commencing Make-Ready Electrical Construction, CPS Energy shall provide no less than ten (10) calendar days' written notice to the Attaching Entities on the affected Pole of the impending work. Such written notice shall be provided through NJUNS.

[13] NESC, Rule 013B4 and Rule 014, C2-2017.

e) Notice to Proceed. Following completion of the Make-Ready Electrical Construction, CPS Energy will issue a CPS Energy Notice to Proceed, a form of which is provided in Appendix B, to the Attaching Entity (applicant) in writing that the Pole is available for Make-Ready Wireless Installation Construction. When applicable, the Attaching Entity shall proceed to install its Wireless Installations utilizing the One-Touch Transfer Process described in Section V.B.5 below. Whenever the transfer of an Attachment would require the cutting or splicing of the Communication Facility, the Complex Transfer Process in Section V.B.6 below shall apply.

f) Failure to Attach. An Attaching Entity must exercise the right granted by the CPS Energy Notice to Proceed within ninety (90) calendar days of issuance of the Notice to Proceed. If needed, the Attaching Entity may request in writing to CPS Energy an additional thirty (30) calendar day extension of the effective period of the Notice to Proceed. The request for this extension must be received by CPS Energy no later than seven (7) calendar days before the expiration date provided in the Notice to Proceed. In considering this request, CPS Energy will review past construction practices of the Attaching Entity and current efforts underway to complete the installation for which the extension was requested. CPS Energy will provide a written response to the request for extension within three (3) calendar days of receiving the request. CPS Energy, at its discretion, may not consider any requests for extension received within seven (7) calendar days of the expiration of the Notice to Proceed.

(i) Failure to install a Wireless Installation within the effective period of the Notice to Proceed, or extended period if granted by CPS Energy, will result in expiration of the Application and the forfeiture of the applicable Application Fees and any payments made for Make-Ready Work already completed. Following expiration of an Application, should the Attaching Entity wish to continue to install the Wireless Installation subject to the expired Application, the Attaching Entity must submit a new Application covering the same Wireless Installation including all appropriate Application Fees.

(ii) CPS Energy and the Attaching Entity shall determine a mutually-agreeable schedule for the completion of the Make-Ready Work should an issue of Force Majeure, as described in the Wireless Installation Agreement, be asserted by either party.

5. **<u>Make-Ready Wireless Installation Construction – One Touch Transfer.</u>** The transfer of third-party Attachments, whether conducted by an Attaching Entity or CPS Energy, in order to accommodate a Wireless Installation shall be part of the One-Touch Transfer Process as further described herein. Pursuant to these Standards, under the One-Touch Transfer Process, an Attaching Entity permitted to make a Wireless Installation may transfer or rearrange the Attachments of one or more Attaching Entities in the Communications Space of a distribution Pole as may be necessary to accommodate the new Wireless Installation contingent upon compliance with requirements identified in this Section V.B.5. All One-Touch Transfers conducted by an Attaching Entity or CPS Energy must comply with the following requirements:

a) <u>Simple Transfers Only.</u> One-Touch Transfers shall be limited to the rearrangement or transfer of a third-party Attachment on an existing Pole and Mid-Span Installation suspended by a Messenger cable between two Poles. Such Attachment or Mid-span Installation may be rearranged within an existing Pole or transferred onto a replacement Pole, provided the affected Attachment or Mid-span Installation (along with any supporting Communication Facility or Overlash) is not subject to cutting and splicing and any affected Mid-span Installation is not severed from the Communication Facility providing connectivity.

b) <u>Certified Contractors.</u> An Attaching Entity must engage qualified contractors approved by CPS Energy pursuant to a certification program developed by CPS Energy with the input of Attaching Entities.

c) <u>Applicability to CPS Energy.</u> CPS Energy's communications wires or facilities installed in the Communication Space of a Pole will also be subject to the One-Touch Transfer Process.

d) <u>One-Touch Transfers Subject to Applicable Engineering Standards.</u> All Make-Ready Wireless Installation Construction performed under the One-Touch Transfer Process shall meet all Applicable Engineering Standards, including CPS Energy's clearance standards. As part of the Make-Ready Wireless Installation Construction, an Attaching Entity may modify one or more Attachments on a Pole and any Mid-span Installation suspended from a Messenger cable between two Poles, by relocating said Attachments/Messengers within an existing Pole or transferring the Attachments/Messengers onto a replacement Pole, as necessary to

accommodate the Wireless Installation. Applications that include Make-Ready Wireless Installation Construction and One-Touch Transfers that fail to meet Applicable Engineering Standards will be rejected by CPS Energy.

e) Cost Responsibility. With the exception of instances where in the sole judgement of CPS Energy a Pole is identified as defective, in which case CPS Energy will be responsible for the cost to replace such defective Pole, the Attaching Entity shall pay all costs of Make-Ready Wireless Installation Construction associated with One-Touch Transfers as described below:

(i) Where the Pole includes one or more third-party Attachment(s) that fail to meet Applicable Engineering Standards but otherwise there is enough space on the Pole to accommodate the Attaching Entity's Wireless Installation, Make-Ready Work will not include the transfer of the third-party Attachment(s), unless the lowest Attachment on the Pole fails to meet NESC clearance standards and/or poses a public safety hazard. In this specific case, the Attaching Entity shall notify CPS Energy, who will notify the owner of the non-compliant Attachment that the Attachment is non-compliant with the Applicable Engineering Standards or presents a Safety Violation in accordance with the provisions of Section II.K.3. The Attaching Entity requesting the Wireless Installation will not be allowed to undertake the installation of the Wireless Installation until the non-compliant Attachment is remedied.

(ii) Where the Pole includes one or more third-party Attachment(s) that fail to meet Applicable Engineering Standards, and in order to accommodate the Attaching Entity's Wireless Installation on the same Pole the third-party Attachment(s) must be rearranged, the cost of rearranging the third-party Attachment(s) will be included in Make Ready Work. Provided that if the lowest Attachment on the Pole fails to meet NESC clearance standards and/or poses a public safety hazard, the Attaching Entity may recover the cost to bring such Attachment into compliance from the owner of that Attachment, but no others.

(iii) Where the Pole includes one or more third-Party Attachment(s) that fail to meet Applicable Engineering Standards, and in order to accommodate the Attaching Entity's Wireless Installation a new Pole must be installed, the cost of the new Pole and the transfer of the third-party Attachment(s) will be included in the Make-Ready Work.

(iv) Where the Pole includes one or more third-party Attachment(s) that meet Applicable Engineering Standards, and otherwise there is enough space on the Pole to accommodate the Attaching Entity's Wireless Installation, Make-Ready Work will not include the transfer of the third-party Attachment(s).

(v) Where the Pole includes one or more third-party Attachment(s) that comply with Applicable Engineering Standards, and in order to accommodate the Attaching Entity's Wireless Installation on the same Pole the third-party Attachment(s) must be rearranged, the cost of rearranging the third-party Attachment(s) will be included in Make-Ready Work.

(vi) Where the Pole includes one or more third-party Attachment(s) that comply with Applicable Engineering Standards, and in order to accommodate the Attaching Entity's Wireless Installation a new Pole must be installed, the cost of the new Pole and the transfer of the third-party Attachment(s) will be included in Make-Ready Work.

f) Notice of Transfer. An Attaching Entity shall provide all third-parties affected by a proposed One-Touch Transfer with advance written notice of such One-Touch Transfer no less than twenty-one (21) calendar days prior to undertaking such One-Touch Transfer. This notice shall be provided using NJUNS to a duly designated representative of the affected Attaching Entity, unless another method of notice is prescribed by CPS Energy. Such notice shall identify the specific Pole(s) subject to the Wireless Installation and affected by such One-Touch Transfer. The Attaching Entity who desires to utilize the One-Touch Transfer Process shall bear the responsibility of determining the appropriate representative for each Attaching Entity affected by the Attaching Entity's implementation of the One-Touch Transfer Process.

g) Critical Communication Facilities. If an affected Attaching Entity, in its reasonable discretion, determines that a proposed One-Touch Simple Transfer poses a risk of disconnection or interruption of service to a Critical Communications Facility, the affected Attaching Entity shall notify the requesting Attaching Entity and CPS Energy in writing within ten (10) calendar days of receiving the notice of transfer described in Section V.5.f. The affected Attaching Entity is obligated to make the requested transfer of its Critical Communication Facilities within fifteen (15) calendar days of providing such notice. Failure to transfer the Critical Communications

Facilities in a timely manner will subject the Critical Communications Facilities to the One-Touch Transfer Process.

h) Post-Transfer Notice. Within fifteen (15) calendar days following the completion of a One-Touch Transfer, the Attaching Entity shall send written notice of the One-Touch Transfer and as-built reports to each affected Attaching Entity. Within thirty (30) calendar days of receipt of these as-built reports, the Attaching Entity that owns the Communications Facilities that were transferred or relocated may conduct an inspection at the expense of the Attaching Entity who moved the facilities. If the One-Touch Transfer failed to meet all Applicable Engineering Standards, the owner of the Communications Facilities subject to transfer or relocated will notify the Attaching Entity responsible for the One-Touch Transfer of any deficiency, which will be corrected within fifteen (15) calendar days following receipt of such written notice at the expense of the Attaching Entity responsible for the One-Touch Transfer. The Attaching Entity responsible for the One-Touch Transfer shall pay the actual, reasonable, and documented inspection expenses incurred by the owner of the Communication Facilities subject to transfer or relocated, within forty-five (45) calendar days of receipt of an invoice. Failure of the owner of the relocated Attachment to undertake and complete the inspection with the thirty (30) calendar day period shall be deemed acceptance of the One-Touch Transfer.

i) Attaching Entity's Attachments Subject to One-Touch Transfer by Other Entities. An Attaching Entity's Communications Facilities shall be subject to the One-Touch Transfer Process conducted by another Attaching Entity or CPS Energy pursuant to the same terms and conditions prescribed in this Section V.B.5 and in Appendix H.

6. Make-Ready Wireless Installation Construction - Complex Transfers.

a) Responsibility for Complex Transfers. The accomplishment of a Complex Transfer is considered part of Make-Ready Wireless Installation Construction and shall be performed by the Attaching Entity which owns the Attachment subject to transfer. It is the responsibility of the Attaching Entity requesting the Complex Transfer to negotiate a private process with the affected Attaching Entity to accomplish the Complex Transfer. The cost of the Complex Transfer shall be borne by the requesting Attaching Entity.

b) Complex Transfers Escalation Process. In the event an Attaching Entity refuses to reach agreement on a process for the expedient transfer of an Attachment or Wireless Installation subject to a Complex Transfer, the requesting Attaching Entity may rely on the following escalation procedures. At any time during these escalation procedures, the requesting Attaching Entity and the owner of the Attachment or Wireless Installation subject to the Complex Transfer may reach agreement on a voluntary transfer process. In such event, the requesting Attaching Entity shall notify CPS Energy in writing of this agreement.

(i) Level 1: Initial Request for Complex Transfer (Days 0 to 30)

a. *Initial Notice Letter*. The requesting Attaching Entity shall provide written notice to owner of the Attachment or Wireless Installation subject to Complex Transfer requesting the transfer of such Attachment using NJUNS with a copy to CPS Energy. The Attaching Entity which owns such Attachment or Wireless Installation shall perform the transfer within thirty (30) calendar days of receipt of notice from the requesting Attaching Entity.

(ii) Level 2: Initial Escalation Process (Days 31 to 60)

a. *Escalation Notification*. If the owner fails to transfer the Attachment or Wireless Installation subject to Complex Transfer within the initial thirty (30) calendar days, the requesting Attaching Entity shall send a certified letter notifying the non-compliant Attaching Entity that failure to transfer the Attachment or Wireless Installation within a subsequent thirty (30) calendar days (escalation period) of receipt of notice will result in the Attachment or Wireless Installation in question being designated by CPS Energy as non-compliant with the Complex Transfer Process and subject to penalty, as described in Appendix H, on the basis of interference with the requesting Attaching Entity's permitted Attachment rights. The requesting Attaching Entity shall send CPS Energy a copy of the escalation letter and all other correspondence between the parties related to this matter.

b. *Duty to Negotiate*. The requesting Attaching Entity is required to continue negotiations with the non-compliant Attaching Entity during the thirty (30) calendar day escalation period. Absent extraordinary circumstances, the non-compliant Attaching Entity's

failure to transfer the Attachment or Wireless Installation subject to Complex Transfer by the end of the thirty (30) calendar day escalation period shall be considered a lack of cooperation on the part of the non-compliant Attaching Entity. Conversely, absent extraordinary circumstances, a refusal by the requesting Attaching Entity to agree to an alternative process for the transfer of the Attachment or Wireless Installation in question within a reasonable date certain shall be considered a lack of cooperation on the part of the requesting Attaching Entity.

c. *Notice of Success Complex Transfer*. If the non-compliant Attaching Entity transfers the Attachment or Wireless Installation subject to Complex Transfer within the thirty (30) calendar day escalation period, or the requesting Attaching Entity transfers the Attachment or Wireless Installation by mutual agreement of the parties, no further escalation will be necessary.

(iii) Level 3: CPS Energy Finding of Non-Compliant Attachments (Days 61 to 90)

a. *Request for Finding of Non-compliant Attachments or Wireless Installations*. If the requesting Attaching Entity and the non-compliant Attaching Entity cannot reach agreement and the other Attaching Entity fails to transfer the Attachment or Wireless Installation subject to Complex Transfer within the thirty (30) calendar day escalation period; the requesting Attaching Entity within five (5) calendar days thereafter shall notify CPS Energy in writing, provide a short summary of efforts to negotiate the rearrangement or transfer of the Attachment or Wireless Installation in question, and request CPS Energy to make a finding of Non-complaint Attachment or Wireless Installation on the basis of interference with the requesting Attaching Entity's permitted Attachment rights. The request shall explain why the requesting Attaching Entity believes the non-compliant Attaching Entity is acting in bad faith.

b. *Notification of Non-Compliant Attachments*. Within ten (10) calendar days of receiving the request for a finding of non-compliant Attachment or Wireless Installation, CPS Energy will evaluate the request and if it finds the request credible; CPS Energy will:

(1) Notify the non-compliant Attaching Entity by certified mail that CPS Energy has determined the Attachment or Wireless Installation subject to Complex Transfer is declared as either a "Non-compliant Attachment" or "Non-compliant Wireless Installation," as appropriate;

(2) The non-conforming Attaching Entity will begin accruing penalties as provided in Appendix H of these Standards until the Non-compliant Attachment or Non-compliant Wireless Installation is transferred; and

(3) CPS Energy will suspend the processing of the non-compliant Attaching Entity's Applications effective five (5) days after receipt of the certified letter.

Thereafter, the non-compliant Attaching Entity will have fifteen (15) calendar days in which to transfer the non-compliant Attachment or non-compliant Wireless Installation and notify CPS Energy in writing in order to reinstate the processing of Applications. If the non-compliant Attaching Entity fails to transfer the non-compliant Attachment or non-compliant Wireless Installation within the twenty (20) calendar day grace period, the non-compliant Attachment or non-compliant Wireless Installation will be subject to further penalties and transfer as provided in Section III.E and Appendix H. CPS Energy will reinstate the processing of the non-compliant Attaching Entity's Applications upon receipt of written notification of the transfer of the non-compliant Attachment or non-compliant Wireless Installation and the payment of all assessed penalties.

c. *Duty to Negotiate*. The requesting Attaching Entity is required to continue negotiations with the non-compliant Attaching Entity which owns the non-compliant Attachment or Wireless Installation during the twenty (20) calendar day grace period.

d. *Notice of Transfer*. If the non-compliant Attaching Entity transfers non-compliant Attachment or non-compliant Wireless Installation within the twenty (20) calendar day grace period, or the requesting Attaching Entity transfers the non-compliant Attachment or non-

compliant Wireless Installation by mutual agreement of the parties, the moving party shall notify CPS Energy by electronic message, CPS Energy shall reinstate processing of the other Attaching Entity's Applications within twenty-four (24) hours of receiving payment of all outstanding penalties.

e. *Stop Processing Applications*. If CPS Energy does not receive written notification of the transfer of the non-compliant Attachment or non-compliant Wireless Installation by the end of the twenty (20) calendar day grace period, CPS Energy shall stop processing the non-compliant Attaching Entity's Applications pending further written notice of a successful transfer and the payment of all outstanding penalties.

(iv) Level 4: Transfer or Removal of Unauthorized Attachments (Days 91 and Beyond)

a. *Notification of Failed Transfer*. If the parties fail to negotiate the successful transfer of the non-compliant Attachment or non-compliant Wireless Installation, the requesting Attaching Entity shall promptly notify CPS Energy in writing of the failed attempt and explain the reasons for the unsuccessful transfer.

b. *Notification of Transfer of Non-compliant Attachments*. Following receipt of the notification of failed transfer, CPS Energy shall promptly proceed to transfer the non-compliant Attachment or non-compliant Wireless Attachment at the respective owner's expense. Following the transfer of the non-compliant Attachment or non-compliant Wireless Attachment, CPS Energy will provide written notification of the transfer to the non-compliant Attaching Entity within twenty-four (24) hours. CPS Energy shall reinstate processing of the non-compliant Attaching Entity's Applications within twenty-four (24) hours of receiving payment for the transfer cost and all outstanding penalties.

d. *Notice of Transfer*. In the event the non-compliant Attaching Entity transfers the non-compliant Attachment or non-compliant Wireless Installation, or the requesting Attaching Entity transfers the non-compliant Attachment or non-compliant Wireless Installation by mutual agreement of the parties, prior to CPS Energy's transfer efforts, the moving party shall notify CPS Energy

in writing. The non-compliant Attaching Entity shall be assessed a one-time fine as provided in Appendix H of these Standards. Thereafter, CPS Energy shall reinstate the processing of the non-compliant Attaching Entity's Applications within twenty-four (24) hours of receiving payment of all outstanding penalties.

7. Notice of Attachment Completion and Acceptance.

The Attaching Entity shall notify CPS Energy in writing by submitting the Completion of Attaching Entity Construction form, a copy of which is available at *www.cpsenergy.com/poleattachments* and in Appendix B, within ten (10) calendar days following the acceptance by all Attaching Entities whose facilities were rearranged or transferred pursuant to Section V.B.5 (Simple Transfer) and/or Section V.B.6 (Complex Transfers) that all Make-Ready Wireless Installation Construction has been completed and accepted, and that the new Wireless Installation and all Make-Ready Work are ready for CPS Energy to undertake Post-Construction Inspection.

8. Post-Construction Inspection.

a) Construction Subject to Inspection. CPS Energy shall complete a Post-Construction Inspection of applicable Make-Ready Work at the Attaching Entity's expense within thirty (30) calendar days of receiving the Attaching Entity's notification set forth in Section V.B.7. CPS Energy will conduct the Post-Construction Inspections to evaluate compliance with the requested Permit, Applicable Engineering Standards, or other design and installation requirements. Completion of a Post-Construction Inspection by CPS Energy shall not in any way relieve any Attaching Entity or an Attaching Entity's insurers of any responsibility, duty, obligation, or liability under these Standards, any contractual agreement, or otherwise; nor does CPS Energy's ability to make Post-Construction Inspections relieve an Attaching Entity from its obligations to exercise due care in the installation of its Wireless Installations. The Post-Construction Inspection provision set forth in this Section V.B.8.a does not affect any other inspection requirements elsewhere in these Standards. This section V.B.8 also applies to supplemental Post-Construction Inspections where the Attaching Entity reports "final corrections" of previously identified non-compliant work or locations as described in Section V.B.8.b below.

b) Compliance. In the event a Post-Construction Inspection conducted pursuant to Section V.B.8.a reveals that corrections or other actions are required of an Attaching Entity, including without limitation those required for reasons of safety or structural integrity, the Attaching Entity shall make such required corrections or take the requested actions within thirty (30) calendar days after the date CPS Energy sends written notice. If CPS Energy determines in its reasonable judgment and discretion that the needed corrections rise to the level of an Emergency, CPS Energy may perform the necessary corrective work without providing notice, at the Attaching Entity's sole risk and cost plus ten-percent (10%). As soon as practicable thereafter, CPS Energy will advise the Attaching Entity of the work performed or the action taken.

c) Issuance of Permit. Upon satisfactory completion of the Post-Construction Inspection, CPS Energy shall notify the Attaching Entity in writing that CPS Energy has approved the Wireless Installation(s) identified in the Application by submitting to the Attaching Entity a Permit, a copy of which form is located in Appendix B, for said applicable Wireless Installation.

VI. APPENDICES

A. CPS Energy Attaching Entity Registration & Annual Reporting Form

B. CPS Energy Pole Attachment Program Forms

C. CPS Energy Notice of Dispute Form

D. CPS Energy Specifications for Attachments

E. CPS Energy Vertical Clearance Requirements

F. CPS Energy Attachment Clearance Requirements

G. CPS Energy Pole Loading Requirements

H. CPS Energy Schedule of Pole Attachment Rates, Fees, and Charges

I. CPS Energy Wireless Installation Diagrams

J. *Reserved for Future Use*

K. CPS Energy Pole Attachment Tag List & Detail

L. *Reserved for Future Use*

M. CPS Energy Equal Employment & Anti-Harassment Policy

N. CPS Energy Information Systems Use Policy

O. CPS Energy Tree Trimming Specifications

Appendix A: CPS Energy Attaching Entity Registration & Annual Reporting Form

Attaching Entity Registration & Annual Reporting Form

To be completed annually by June 1 or as required due to contact information changes

Submit form via email to bdbartos@cpsenergy.com. Email Subject Line: Annual Registration & Reporting Form

Date Form Submitted to CPS Energy: _____

Attaching Entity General Information	
Attaching Entity Name	
Corporate Address	
Local Address	
Form Submitted by	
Telephone Number	
Email	

Does This Entity Hold a Certificate from the Public Utility Commission of Texas?	Y / N
If Yes, Indicate Certificate Number and Date Received	

Has This Entity Been Granted a Franchise, Licensee Agreement, Permit, or Ordinance by the City of San Antonio?	Y / N
If Yes, Indicate Certificate Number and Date Received	
Has This Entity Been Granted a Franchise, Licensee Agreement, Permit, or Ordinance by a Suburban City in the CPS Energy Service Area?	Y / N
If Yes, Indicate City, Certificate Number and Date Received	

Is This Entity an Infrastructure Provider as Defined by the Standards?	Y / N
If Yes, Please Identify All Infrastructure Provider Sublicensees Under Contract	

Form Revised: 11/30/2016 Page 1 of 6

Attaching Entity Registration & Annual Reporting Form

Attaching Entity Contact for Contract/Legal Notices (Primary Contact)	
Contact Name	
Title	
Address	
Telephone	
Email	
Fax	

Attaching Entity Contact for Insurance Notices	
Contact Name	
Title	
Address	
Telephone	
Email	
Fax	

Attaching Entity Contact for Annual Billing/Invoicing/Rental Payments	
Contact Name	
Title	
Address	
Telephone	
Email	
Fax	

Form Revised: 11/30/2016

Page 2 of 6

Attaching Entity Registration & Annual Reporting Form

Attaching Entity Contact for Attachment Transfer Notices	
Contact Name	
Title	
Address	
Telephone	
Email	
Fax	

Attaching Entity Contact for Make-Ready Invoicing	
Contact Name	
Title	
Address	
Telephone	
Email	
Fax	

Attaching Entity Contact for Emergency / Damaged Plant / Network Operations Center	
Contact Name	
Title	
Address	
Telephone	
Email	
Fax	

Attaching Entity Other Contact	
Contact Purpose	
Contact Name	
Title	
Address	
Telephone	
Email	
Fax	

Form Revised: 11/30/2016

Page 3 of 6

Attaching Entity Registration & Annual Reporting Form

Attaching Entity Contact for Dispute Escalation	
First Level Contact Name	
Title	
Address	
Telephone	
Email	
Fax	

Second Level Contact Name	
Title	
Address	
Telephone	
Email	
Fax	

Third Level Contact Name	
Title	
Address	
Telephone	
Email	
Fax	

Form Revised: 11/30/2016

Page 4 of 6

Attaching Entity Registration & Annual Reporting Form

Add rows in table as necessary

New Attachment List

CPS Energy Pole Number	Description of Attachment, Overlash, or Wireless Installation	Approximate Date of Unpermitted Attachment

Non-Functional List

CPS Energy Pole Number	Description of Attachment, Overlash, or Wireless Installation	Approximate Surrender Date

Removed Equipment List

CPS Energy Pole Number	Description of Attachment, Overlash, or Wireless Installation	Approximate Removal Date

Form Revised: 11/30/2016 Page 5 of 6

Attaching Entity Registration & Annual Reporting Form

Additional Remarks (attach additional documents as necessary)

For CPS Energy Use Only	
Date Received by CPS Energy	
By	
Printed Name	
Title	
Date	

Form Revised: 11/30/2016

Page 6 of 6

Appendix B: CPS Energy Pole Attachment Program Forms

B1: CPS Energy Application for Pole Attachment Permit

B2: CPS Energy Application for Wireless Installation Permit

B3: CPS Energy Request for Pre-Certification of Wireless System

B4: CPS Energy Request for Waiver of Applicable Engineering Standards

B5: CPS Energy Authorization for Make-Ready Work

B6: CPS Energy Request for Temporary Attachment

B7: CPS Energy Completion of Attaching Entity Construction

B8: CPS Energy Notice to Proceed

B9: CPS Energy Permit for Attachment or Wireless Installation

B10: CPS Energy Notice of Unauthorized Attachment or Unauthorized Wireless Installation

B11: CPS Energy Pole Attachment Standards Revision Request (PASRR)

B12: CPS Energy Pole Attachment Standards Revision Request (PASRR) Comment Form

B13: CPS Energy Notice of Safety Violation

B14: CPS Energy Notice of Safety Violation Assessment Charge

B1: CPS Energy Application for Pole Attachment Permit

_____(Licensee) hereby request permission to add or gives notice of the removal of contacts on the City Public Service poles shown below and on the attached drawing. These contacts will be installed or removed according to the Pole Licensee Agreement at _____ between these two organizations.

Pole attachment permission is hereby granted to attach the communication facilities described in this application to the number of poles indicated in the "Total # of Poles" box below and as indicated in the attached sketches or maps provided. However, if such attachment or removal is not completed within sixty(60) days of the authorization date, billing for said attachments will continue until the date of actual removal.

I certify, that by signing this statement, the application attached hereto complies with the requirements of the Texas Engineering Act, the National Electrical Safety Code, and all other Applicable Standards (Please see designated certification area on upper right corner of application)

Certification

Signature

Printed Name

Title

Definitions:

One Touch Transfer: Transfer of third-party Attachment or Overlash on an existing Pole or onto a new Pole that does not require cutting and splicing of such Attachment and which will not result in a network outage affecting the Attaching Entity that owns the Attachment subject to transfer.

Simple (Simple Transfer): Transfer or relocation of any Attachment or Overlash on an existing Pole or onto a new Pole that does not require cutting and splicing of such Attachment and which will not result in a network outage affecting the Attaching Entity that owns the Attachment subject to transfer.

Complex (Complex Transfer): Transfer or relocation of third-party Attachment or Overlash onto a CPSE Energy Pole that will result in a network outage to the Attaching Entity that owns the Attachment or Overlash subject to transfer.

CPSE Red Tag: A CPSE pole that has been previously inspected and designated, with a Red Tag, as a pole requiring change out.

FOR CPS USE ONLY

Approved By	
Title	
Telephone number	
Approval Date	

CPS VTR (if needed)

Attaching Company	
Application Number (tag# - year - unique client app. #)	
By	
Title	
Telephone number	

Date	
City/Township	
State	
Nearest Street Address	
X-Coordinates	
Y-Coordinates	

Number of New attachments:	0
Number of Overlashes:	0
Total # of Poles:	0
Number of Riser poles:	0
Proposed Cable Count	
Proposed Cable Diameter	
Proposed Cable Weight	

Total Pole Load Analysis:	0
Total Make Ready Simple	0
Total Make Ready Complex	0
Total Upgrade Simple	0
Total Upgrade Complex	0
Attacher Cable Information	
Existing Cable Count	
Existing Cable Count	
Existing Cable Count	

Operation Number	Attachment Action: (I)Installing (R)Leaving (E)Existing	Pole Owner	Pole #	Pole Structure	Proposed Riser (Y=of Riser) & Qty	Proposed Guy (Y=of Guy) & Qty	PLA (?) with proposed attachment	Construction Grade of Analysis	Existing Mid-Span Data: Height Lowest Com	Existing Mid-Span Data: Height Lowest CPS Electrical	Make Ready Data: Attacher Description	Make Ready Data: Attachment Height: Existing	Make Ready Data: Attachment Height: Proposed	Make Ready Data: Mid-Span (same span as existing): Proposed	One Touch Transfer: Make Ready or Upgrade & Simple or Complex	Remedy Description and Explanation of Additional Comments/Variance Requests	Responsible Party: Attacher or CPS	Existing CPSE Red Tag on Pole	Pole Data Missing in GIS (If yes-fill out Missing Pole Data worksheet)	CPSE Application Comments:
1																				
2																				

Page 1

B2: CPS Energy Application for Wireless Installation Permit

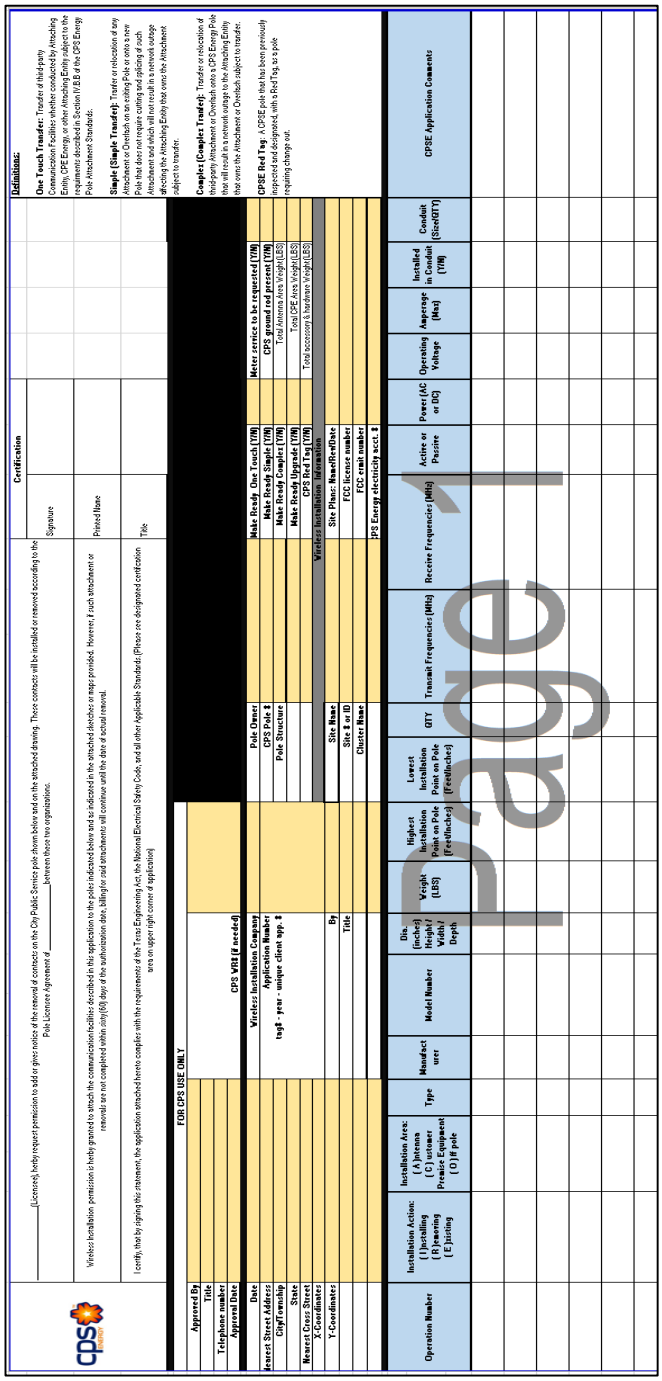

_____(Licensee), hereby request permission to add or given notice of the removal of contacts on the City Public Service pole shown below and on the attached drawing. These contacts will be installed or removed according to the Pole Licensee Agreement of _____ between these two organizations.

Wireless Installation permission is hereby granted to attach the communication facilities described in this application to the poles indicated below and as indicated in the attached sketches or maps provided. However, if such attachment or removals are not completed within sixty(60) days of the authorization date, billing for said attachments will continue until the date of actual removal.

I certify, that by signing this statement, the application attached hereto complies with the requirements of the Texas Engineering Act, the National Electrical Safety Code, and all other Applicable Standards. (Please see designated certification area on upper right corner of application)

Certification
Signature
Printed Name
Title

Definitions:

One Touch Transfer: Transfer of third-party Communication Facilities whether conducted by Attaching Entity, CPE Energy, or other Attaching Entity subject to the requirements described in Section VI.B.8 of the CPS Energy Pole Attachment Standards.

Simple (Simple Transfer): Transfer or relocation of any Attachment or Overlash on an existing Pole or onto a new Pole that does not require cutting and splicing of such Attachment and which will not result in a network outage affecting the Attaching Entity that owns the Attachment subject to transfer.

Complex (Complex Transfer): Transfer or relocation of third-party Attachment or Overlash onto a CPS Energy Pole that will result in a network outage to the Attaching Entity that owns the Attachment or Overlash subject to transfer.

CPSE Red Tag: A CPSE pole that has been previously inspected and designated, with a Red Tag, as a pole requiring change out.

FOR CPS USE ONLY
Approved By
Title
Telephone number
Approval Date

CPS USE (if needed)
Date
Nearest Street Address
City/Township
State
Nearest Cross Street
X-Coordinates
Y-Coordinates

Wireless Installation Company
Application Number
tag# - year - unique client app. #

By
Title

Pole Owner
CPS Pole #
Pole Structure

Site Name
Site # or ID
Cluster Name

Make Ready One Touch (Y/N)
Make Ready Simple (Y/N)
Make Ready Complex (Y/N)
Make Ready Upgrade (Y/N)
CPS Red Tag (Y/N)

Wireless Installation Information
Site Phase: Name/Re-Phase
FCC license number
FCC crail number
CPS Energy electricity acct. #

Meter service to be requested (Y/N)
CPS ground rod present (Y/N)
Total Antenna Area Weight (LBS)
Total CPE Area Weight (LBS)
Total accessory & hardware Weight (LBS)

Operation Number
Installation Action: (I)Installing (R)Removing (E)Existing
Installation Area: (A)Antenna (C)Customer Premise Equipment (O)On pole
Type
Manufacturer
Model Number
Dia. (inches)/ Height/ Width/ Depth
Weight (LBS)
Highest Installation Point on Pole (Feet/Inches)
Lowest Installation Point on Pole (Feet/Inches)
QTY
Transmit Frequencies (MHz)
Receive Frequencies (MHz)
Active or Passive
Power (AC or DC)
Operating Voltage
Amperage (Max)
Installed in Conduit (Y/N)
Conduit (Size/QTY)
CPSE Application Comments

Page 1

B3: CPS Energy Request for Pre-Certification of Wireless System

Request for Pre-Certification of Wireless System

Attaching Entity Information	
Attaching Entity Name	
Address	
Contact Person	
Email	
Cell Number	

Manufacturer Information			
Manufacturer Name			
Address			
Manufacturer Website			
Manufacturer Contact Name			
Email		Phone	

Equipment Information			
Description			
Part / Item #		Model Number	
Dimensions (LxWxD inches)		Weight (lbs)	
Transmit Frequency Range		Receive Frequency Range	
Power Input *(AC/DC)*		Input *(Volt/Amp/Watts)*	
Power Output *(AC/DC)*		Output *(Volt/Amp/Watts)*	

Applicable manufacturer specification documents ("cut sheet") submitted with this form Y / N
Drawings of typical Attaching Entity proposed installation submitted with this form Y / N

Form Revised: 11/30/2016 Page 1 of 2

Request for Pre-Certification of Wireless System

For CPS Energy Use Only	
Date Received by CPS Energy	
Date Pre-Certification Approved	
By	
Printed Name	
Title	
Date	

Comments by CPS Energy:

*_

Form Revised: 11/30/2016

Page 2 of 2

B4: CPS Energy Request for Waiver of Applicable Engineering Standards

Request for Waiver of Applicable Engineering Standards

Submit form to poleapplications@cpsenergy.com *Subject Line: Request for Waiver*

Attaching Entity		**Application Number**	

Requestor	
Name	
E-mail Address	
Company	
Phone Number	
Cell Number	

Pole Attachment Standards Section Requested to be Waived *(Identify Section(s) by title/name proposed for waiver)*	
Description of Waiver Request *(A brief description of the specific waiver requested)*	

Business Case *(Include brief Business Case justification for the proposed waiver)*	
Safety	•
Reliability	•
Customer Service	•
Other	•

For CPS Energy Only	
Determination of Waiver	
By	
Printed Name	
Title	
Date	

Form Revised: 11/30/2016 Page 1 of 1

B5: CPS Energy Authorization for Make-Ready Work

Authorization for Make-Ready Work

In response to Attaching Entity's Application No._____, dated_____, CPS Energy has determined that Make-Ready Electrical Construction is required before the Attaching Entity may install its Attachment, Overlash, or Wireless Installation. Pursuant to CPS Energy's Pole Attachment Standards, Attaching Entity must authorize and made advance payment to CPS Energy for this Make-Ready Electrical Construction. The following is a summary of the estimated charges payable to CPS Energy for Make-Ready Electrical Construction associated with the above referenced Application. In accordance with Section II.I.3, this estimate is valid for fifteen (15) days from date of issue. Failure of the Attaching Entity to sign and return this authorization form within the fifteen (15) period will result in the Application being deemed cancelled by the Attaching Entity. Any true-ups to actual costs shall be completed in accordance with Section II.I.3.

CPS Energy Work Request No._____	
Make-Ready Electrical Work	
Labor Total……	$
Equipment Total……	$
Material Total……	$
Other……	$
Sub-Total……	$
(Less Salvage Credit)……	$
Total Cost:	$

Return this authorization form & payment to:
CPS Energy
Manager, Pole Attachment Services
Mail Drop 100201
PO Box 1771
San Antonio, TX 78296
or Email: poleapplications@cpsenergy.com

For CPS Energy	
By:	
Printed Name:	
Date Signed:	
Valid to Date:	

Make Ready Work Acceptance

Attaching Entity authorizes CPS Energy, or its contractors, to proceed with the Make-Ready Electrical Construction associated with the above referenced Application. Payment of the estimated charges identified above for such Make-Ready Electrical Construction is enclosed.

For Attaching Entity	
By:	
Title:	
Telephone No:	
Date Signed:	

Form Revised: 11/30/2016

Page 1 of 1

B6: CPS Energy Request for Temporary Attachment

Request for Temporary Attachment

Submit form to poleapplications@cpsenergy.com *Subject Line: Request for Temporary Attachment*

Attaching Entity		**Application Number**	
Date Temporary Attachment Required			

Requestor	
Name	
E-mail Address	
Company	
Phone Number	
Cell Number	

Work Request # *(WR# of the Make-Ready Electrical Construction required to completed for this Application)*	

Type of Temporary Attachment & Location (Pole #) *(Include Pole Number for Temporary Attachment requiring Make-Ready Electrical Construction)*	
New Attachment	PL#
Overlash	PL#
Wireless Installation	PL #
Other	•

Approval by CPS Energy	
By	
Printed Name	
Title	
Date	

Form Revised: 11/30/2016 Page 1 of 1

B7: CPS Energy Completion of Attaching Entity Construction

Completion of Attaching Entity Construction

Submit form to poleapplications@cpsenergy.com *Subject Line: Construction Completion*

Attaching Entity		**Application Number**	

Reported by	
Name	
E-mail Address	
Company	
Phone Number	
Cell Number	

Type and Date of Completed Construction *(Identify the type of Construction and list the date work was completed)*	
Date Make-Ready Electrical Construction Completed	
Work Request Number	WR#
Date Make-Ready Communication Construction Completed	
Are all 3rd Party Attachments Successfully Transferred	Yes / No
Date Make-Ready Wireless Installation Construction Completed	
Are all 3rd Party Attachments Successfully Transferred	Yes / No
Other	

Received by CPS Energy	
By	
Printed Name	
Title	
Date	

Form Revised: 11/30/2016 Page 1 of 1

B8: CPS Energy Notice to Proceed

Notice to Proceed

Attaching Entity		**Application Number**	
Date of Application		**WR#** *(If Applicable)*	

In accordance with the applicable provisions of the CPS Energy Pole Attachment Standards (Standards), CPS Energy has:

_____ Approved the Application referenced above and has determined that no Make-Ready Electrical Construction is required for this Application. The Attaching Entity is now authorized to proceed with Make-Ready Communication Construction or Make-Ready Wireless Installation Construction, as appropriate, and to install its Attachment, Overlash, or Wireless Installation subject to compliance with the Standards.

_____ Approved the Application referenced above and completed all Make-Ready Electrical Construction required for this Application on _____. The Attaching Entity is now authorized to proceed with Make-Ready Communication Construction or Make-Ready Wireless Installation Construction, as appropriate, and to install its Attachment, Overlash, or Wireless Installation subject to compliance with the Standards.

For Attaching Entities utilizing the Competitive Provider – Area Wide Network Deployment Process Only

_____ Approved the Application referenced above. The Attaching Entity is now authorized to complete all Make-Ready Electrical Construction required for this Application and further, the Attaching Entity is authorized to proceed with Make-Ready Communication Construction and to install its Attachment or Overlash subject to compliance with the Standards.

Approval by CPS Energy	
By	
Printed Name	
Title	
Date	

Form Revised: 11/30/2016

Page 1 of 1

B9: CPS Energy Permit for Attachment or Wireless Installation

Permit for Attachment or Wireless Installation

Attaching Entity		**Application Number**	
Date of Application		**Permit Number**	

In accordance with the provisions of the CPS Energy Pole Attachment Standards (Standards), CPS Energy has:

_____ Approved the Application and all Make-Ready Work associated with this Application. Therefore, CPS Energy is granting a Permit for the Attachments made to CPS Energy Poles in the above referenced Application Number. This Permit is non-exclusive and subject to all provisions of the Pole Attachment Agreement and the Pole Attachment Standards.

_____ Approved the Application and all Make-Ready Work associated with this Application. Therefore, CPS Energy is granting a Permit for the Wireless Installation made to CPS Energy pole(s) in the above referenced Application Number. This Permit is non-exclusive and subject to all provisions of the Wireless Installation Agreement, the Wireless Installation Addendum, and the Pole Attachment Standards.

With the issuance of this Permit, CPS Energy will close the above referenced Application

Issued for CPS Energy	
By	
Printed Name	Brian D. Bartos, P.E.
Title	Manager, Pole Attachment Services
Date	

Form Revised: 11/30/2016 Page 1 of 1

B10: CPS Energy Notice of Unauthorized Attachment or Unauthorized Wireless Installation

Notice of Unauthorized Attachment or Unauthorized Wireless Installation

Attaching Entity	
Primary Contact Person	
Title	
Address	
Phone	
Email	

Pursuant to the CPS Energy Pole Attachment Standards (Standards), the following Unauthorized Attachments or Unauthorized Wireless Installations have been identified on CPS Energy Facilities:

CPS Energy Pole Number	Description or Type of Unauthorized Equipment	Approximate Date Discovered	Unauthorized Attachment or Unauthorized Wireless Installation Charge
			$
			$
			$
			$
			$
			$
			$
			$

If you believe this finding of an Unauthorized Attachment or Unauthorized Wireless Installation is incorrect, you may dispute this finding within forty-five (45) calendar days pursuant to Section II.I.6 by providing to CPS Energy a copy of either (1) Permit for Attachment, (2) Permit for Wireless Installation, or (3) an approved Application from CPS Energy which covers the installations described above.

If you do not dispute this finding within forty-five (45) calendar days upon receipt of this Notice of Unauthorized Attachment or Unauthorized Wireless Installation, you must submit for the Unauthorized Attachment or Unauthorized Wireless Installation (1) an Application for a Permit, (2) the correct Application Fee, and (3) the Unauthorized Attachment Charge or Unauthorized Wireless Installations Charge to CPS Energy as noted above and invoiced.

Inquires related to this Notice shall be made to:
CPS Energy
Manager, Pole Attachment Services
Mail Drop 100201
San Antonio, TX 78296

For CPS Energy	
By	
Printed Name	Brian D. Bartos, P.E.
Title	Manager, Pole Attachment Services
Date Signed	

Form Revised: 11/30/2016

Page 1 of 1

B11: CPS Energy Pole Attachment Standards Revision Request (PASRR)

Pole Attachment Standards Revision Request (PASRR)

Submit form to bdbartos@cpsenergy.com *Subject Line: Standards Revision Request*

PASRR Number		PASRR Title	
Date Received		Date Posted for Comments	

CPS Energy to complete the information above the line

PASRR requestor to complete the information below

Pole Attachment Standards Section(s) Requiring Revision *(Identify Section(s) by title/name proposed for revision)*	
Type of Revision *(See CPS Energy Pole Attachment Standards for Definitions of Tier 1 and Tier 2 Revisions)*	☐ Tier 1 Revision. ☐ Tier 2 Revision. ☐ Other: (explain)
Revision Description *(A brief description of the scope/impact of the revision requested)*	
Reason for Revision	☐ Addresses current operational issues. ☐ Facilitates efficiencies or enhancements ☐ Administrative ☐ Regulatory or Legal requirements ☐ Other: (explain)

Business Case *(Include brief Business Case justification for the proposed revision)*	
Safety	•
Reliability	•
Customer Service	•
Other	•

Form Revised: 11/30/2017 Page 1 of 2

Pole Attachment Standards Revision Request (PASRR)

Requestor	
Name	
E-mail Address	
Company	
Phone Number	
Cell Number	

Proposed Standard Language Revision
(Please provide proposed revision in 'red-line' format)

*_

Form Revised: 11/30/2017

Page 2 of 2

B12: CPS Energy Pole Attachment Standards Revision Request (PASRR) Comment Form

Pole Attachment Standards Revision Request (PASRR) Comment Form

Submit form to bdbartos@cpsenergy.com *Subject Line: PASRR Comments*

PASRR Number		**PASRR Title**	

Date	

Comment Submitter's Information	
Name	
E-mail Address	
Company	
Phone Number	
Cell Number	

Comments
(Please provide any specific comments regarding proposed PASRR)

*_

Revised Proposed Standard Language
(Please provide any proposed alternate revisions to the PASRR language in 'red-line' format)

*_

Form Revised: 11/30/2016 Page 1 of 1

B13: CPS Energy Notice of Safety Violation

Notice of Safety Violation

Safety Violation Number		Date Issued	

Attaching Entity	
Primary Contact Person	
Title	
Address	
Phone	
Email	

Pursuant to the CPS Energy Pole Attachment Standards (Standards), CPS Energy has identified the following Safety Violation(s) on Attachments, Overlashing, or Wireless Installations owned by the Attaching Entity referenced above:

CPS Energy Pole Number	Description of Safety Violation	Approximate Date Discovered

Pursuant to Section II.K of the Standards, you are hereby given notice that you are required to correct the above referenced Safety Violation(s) within five (5) calendars days of issuance of this Notice of Safety Violation.

Failure to correct the above referenced Safety Violation(s) within five (5) calendar days of issuance of this Notice of Safety Violation will subject the above referenced Attaching Entity to enforcement actions and other remedies available to CPS Energy under the Pole Attachment Agreement, Wireless Installation Agreement, or the Standards.

Inquires related to this Notice shall be made to:
CPS Energy
Manager, Pole Attachment Services
Mail Drop 100201
San Antonio, TX 78296

For CPS Energy	
By	
Printed Name	Brian D. Bartos, P.E.
Title	Manager, Pole Attachment Services
Date Signed	

Form Revised: 11/30/2016

Page 1 of 1

B14: CPS Energy Notice of Safety Violation Assessment Charge

Notice of Safety Violation Assessment Charge

Safety Violation Number		Original Date Issued	

Attaching Entity	
Primary Contact Person	
Title	
Address	
Phone	
Email	

Pursuant to the CPS Energy Pole Attachment Standards (Standards), CPS Energy has identified the following Safety Violation(s) on Attachments, Overlashing, or Wireless Installations owned by the Attaching Entity referenced above and is levying Safety Violation Assessment Charges as shown below:

CPS Energy Pole Number	Description of Safety Violation	Approximate Date Discovered	Safety Violation Assessment Charge
			$
			$
			$
			$
			$

Pursuant to Section II.K of the Standards, you may dispute such Safety Violation Assessment Charges within fifteen (15) calendar days of CPS Energy's issuance of this Notice of Safety Violation Assessment Charge (Notice).

Failure to dispute the Safety Violation Assessment Charges shown above within fifteen (15) calendar days of the issuance of this Notice, shall result in the Attaching Entity named above to pay the charges shown above in full within forty-five (45) calendar days of issuance of this Notice.

Failure to timely pay the Safety Violation Assessment Charge, shall subject the above referenced Attaching Entity to enforcement actions and other remedies available to CPS Energy under the Pole Attachment Agreement, Wireless Installation Agreement, or the Standards.

Inquires related to this Notice shall be made to:
CPS Energy
Manager, Pole Attachment Services
Mail Drop 100201
San Antonio, TX 78296

For CPS Energy	
By	
Printed Name	Brian D. Bartos, P.E.
Title	Manager, Pole Attachment Services
Date Issued	

Form Revised: 11/30/2016

Page 1 of 1

Appendix C: CPS Energy Notice of Dispute Form

CPS Energy – Notice of Dispute Form

CPS Energy is committed to reviewing and resolving a dispute of your claim in a fair and efficient manner. If you are disputing CPS Energy's liability decision, you may notify us within five (5) business days of receiving our Collection Notice Letter by completing this form and sending to the Claims Department.

Please complete this form by printing legibly, attaching any new pertinent information to support your dispute, and send to: **CPS Energy Claims Department Maildrop 110902 P.O. Box 1771 San Antonio, TX 78296.**

CPS Energy Claims management may assign the dispute to an internal independent review panel which will provide a *de novo* review of the claim file, including this Notice of Dispute Form, and any supporting documentation you may submitted. CPS Energy will notify you of the **final** determination of liability within thirty (30) calendar days of receipt of this Form.

CPS Energy Claim File Number: _____

Name of Company (Attaching Entity): _____

Company Representative: _____

Phone Number: _____ **Email:** _____

Please describe the reason(s) for your dispute and attach any new supporting documents, photographs, and/or diagram.

Dispute Reason(s):

145 Navarro P.O. Box 1771 San Antonio, Texas 78296

Appendix D: CPS Energy Specifications for Attachments & Wireless Installations

The following engineering and construction specifications practices will be followed by the Attaching Entity when making Attachments or Wireless Installations to CPS Energy Poles, Streetlight Poles, or other CPS Energy Facilities. The items listed below are not an exhaustive list, and are intended to supplement, not replace the National Electrical Safety Code (NESC) or other Applicable Engineering Standards required by the Pole Attachment Agreement, Wireless Installation Agreement, CPS Energy Pole Attachment Standards, or other applicable CPS Energy standards and specifications.

A. Wire Attachments:

1. **Attachment and Cable Clearances:** Attaching Entity's Attachments on CPS Energy Poles, including metal attachment clamps and bolts, metal cross-arm supports, bolts and other equipment, must be attached so as to maintain the minimum separations specified in the National Electrical Safety Code (NESC) and in the CPS Energy drawings and standards provided in Appendix E and Appendix F. CPS Energy adopts and requires Attaching Entity's compliance with revisions of the NESC upon adoption by NESC of those revisions. Compliance with NESC sections pertaining to overhead communication lines ***will be stringently enforced*** by CPS Energy.

2. **Sag and Mid-Span Clearances:** Attaching Entity will leave proper sag in its lines and cables and shall observe the established sag of power line conductors and other cables so that minimum clearances are (a) achieved at Poles located on both ends of the span; and (b) retained throughout the span. At mid-span, a minimum of four inches (4") of separation must be maintained between any other communication cables. At the Pole support, a twelve inch (12") spacing must be maintained between Attaching Entity's connection and any other Attaching Entities connection as noted in Appendix F.

3. **Vertical Runs on Poles:** All vertical runs on Poles, including those for power feed for TV amplifiers, shall be placed on the quarter faces of the Pole and shall be covered by a riser guard with a two-inch (2") clearance in any direction from cable, bolts clamps, metal supports and other equipment. Secondary cable providing service to streetlights may be covered with non-metallic conduit to allow minimum clearances to communication cables as permitted in the NESC.

4. **Cable Bonding:** An Attaching Entity's Messenger cable shall be bonded to the CPS Energy Pole ground wire at each CPS Energy Pole that has a ground wire.

5. **Down Guys and Anchors:**

   a) Down guys shall not be bonded to ground or Neutral wires of the CPS Energy Pole and shall not provide a current path to ground from the Pole ground or power system Neutral.

   b) All Attaching Entities shall provide their own anchors. ***Under no circumstances*** is the Attaching Entity allowed to attach its guy to a CPS Energy anchor. Attaching Entity's anchors shall strive to be a minimum of four (4) feet from the CPS Energy anchor.

   c) No Attachments may be installed on a Pole until all required guys and anchors are installed. No Attachment may be modified, added to, or relocated in such a way as will materially increase the stress or loading on a Pole until all required guys and anchors are installed.

   d) Anchors and guys must be installed on each Pole where an angle or dead-end occurs. Attaching Entity shall make guy attachments to Poles at or below the height of its cable Attachment.

6. **Service Drop Clearance:** The parallel minimum separation between an Attaching Entity's Service Drops and telephone Service Drops shall be six inches (6"), and the crossover separation between the drops shall be twelve inches (12").

7. ***Omitted.***

8. **Service Clearances:** A four-inch (4") separation shall be maintained between CPS Energy's service cable and any other Attaching Entities facilities located on the customer's private property in accordance with the National Electric Code (NEC).

9. **Climbing Space:** All Attachments must be placed as to allow and maintain at all times, a clear and proper climbing space on the face of the CPS Energy Pole. Cable Attachments shall be placed on the same side of the Pole as existing telephone or communication cables. In general, all other facilities and vertical runs should be placed on Pole quarter faces.

10. **Riser Installations:** On a going forward basis, all Riser installations, including those providing 120/240 volt power for Attaching Entity's equipment enclosure shall be placed on the quarter faces of a Pole and limited such that one side (180 degrees) of the pole is kept clear for climbing space and future replacement of the pole and must be installed in CPS Energy approved conduit with a weatherhead attached to the Pole with metal stand-off brackets. Communication cable Risers should be located on the same side of the pole as their overhead communication cables are attached. Ground wires

may be attached directly to the Pole. There shall be forty (40") inch separation from the top of an electric Riser to the highest communication line.

11. **Identification:** All Attaching Entity's Communication Facilities, including all cable, shall be identified with Tags as required by these Standards and described in Appendix K.

12. **Telecommunication Cables:** All telecommunication cables not owned by CPS Energy shall be attached within the Communication Space that is located no less than forty inches (40") below the CPS Energy Neutral.

13. **Communication Worker Safety Zone**: The Communication Worker Safety Zone between Communication Facilities and supply facilities on the same Pole extends horizontally out to the boundaries of the climbing space and working space as described in the NESC. The Communication Worker Safety Zone is measured vertically from the level of the closest surface of the Communication Facility to the level of the closest surface of the electrical supply facility. The required clearance of the Communication Worker Safety Zone is measured vertically between the levels of the equipment involved. Stand-off bracket installation will not be allowed to meet the forty inch (40") clearance requirement. No mounting brackets are permitted in the Communication Worker Safety Zone.

14. **Platforms:** Communication Facilities/Attachments must dip underground one Pole before and one Pole after on all CPS Energy Platforms for step-down and voltage-regulator banks.

15. **Power Supply**: Attaching Entity shall install no power supply on any CPS Energy Pole on which underground services, capacitor banks, sectionalizing equipment, voltage-regulators, or other CPS Energy equipment is already installed.

16. **Disconnect or Breaker.** No electrical service connection to a communication power supply shall be made or installed by Attaching Entity until CPS Energy shall have completed an inspection of an approved fused service disconnect or circuit breaker installed by the Attaching Entity.

17. **Relocating Attachments**: When moving an Attachment from one location to another, Attaching Entity shall immediately treat all affected holes left in the Pole with industry-acceptable wood preservative and plug all holes left by such Attachments.

18. **Bolts:** No bolt used by Attaching Entity to attach its Communication Facilities shall extend or project more than one inch (1") beyond its nut.

19. **Workmanship**: Attaching Entity shall install and maintain any and all of its Communication Facilities in a neat and workmanlike manner consistent with the maintenance of the overall appearance of the Pole as determined by CPS Energy in its sole discretion.

20. **Attachment Arm**: Communications cables shall be installed without the use of Attachment Arms, extension arms, stand-off brackets or similar hardware, unless otherwise approved in advance by CPS Energy for each Pole. The proposed use of Attachment Arms, extension arms, stand-off brackets or similar hardware by an Attaching Entity shall be identified on the Application for Permit.

B. Wireless Installations:

1. **<u>FCC OET Bulletin 65 (Maximum Permissible Exposure)</u>:** Attaching Entity shall comply with all provisions and guidelines of the FCC OET Bulletin 65, as may be amended from time to time. As part of the Pre-Certified Equipment process, and prior to CPS Energy granting any Permit to attach, Attaching Entity shall submit a report certifying FCC OET 65 compliance for each applied or licensed Wireless Installation location. The report can be in the format of the Attaching Entity's regulatory department standards. The following elements, at a minimum, must be contained within the report:

   a) A statement of compliance (or non-compliance),
   b) Date of the report,
   c) Date of statement of compliance,
   d) CPS Energy Pole Number proposed for the Wireless Installation,
   e) Attaching Entity's site or identification number for the Wireless Installation,
   f) GPS coordinates of the proposed pole for the Wireless Installation,
   g) Calculation of RF power at the transmitter or Remote Radio Heads,
   h) Calculation of RF power at the Antennas, and
   i) Location of the applicable signage with above ground level height listed.

   CPS Energy reserves the right not to accept reports that CPS Energy in its reasonable discretion deem incomplete, contradictory, and/or erroneous. All statements of compliance must be signed by an authorized and responsible employee of the Attaching Entity or the FCC licensee that owns the licensed frequencies subject to compliance, if the Attaching Entity is not the same party (the "Licensed Party"). The Attaching Entity or Licensed Party is required to resubmit annual reports and statement of compliance for each permitted Wireless Installation location. The annual report will be due on the anniversary date for annual reports set by CPS Energy in Section II.F.

2. **<u>RF Signage Requirements</u>.** Approved signage compliant with FCC OET Bulletin 65 shall be posted at each Pole, Streetlight Pole, and/or at multiple locations on the pole as required by FCC OET 65. The RF signage shall comply with the appropriate and predetermined exposure level applicable to: "General Public", "Occupational Worker", and "Specialized Worker" as shown in the figure below.

General Public | **Occupational Worker** | **Specialized Worker**

All signage shall be of made of weather, corrosion, and Ultra-Violet (UV) resistant materials.

3. **<u>Antenna</u>**. All Antennas shall be located in a defined Antenna Area as provided in the illustrations in Appendix I. The Antenna Area is not exclusive for the Attaching Entity's sole use, but shall allow for other permitted Attaching Entities and expressly CPS Energy's use and operation of the pole. Antennas can be flush-mounted or installed on standoffs on the poles.

a) <u>Type, Size and Quantity</u> – Antennas can be of a panel or omnidirectional type. Panel Antennas cannot exceed twelve inches (12") in height (vertical length), twelve inches (12") in width, or eight inches (8") in depth. Omni directional antennas cannot exceed twelve inches (12") in height (vertical length), twelve inches (12") in width (depth and with are the same measurement of an omnidirectional antenna). There can only be three (3) antennas per Antenna Area. Additional consideration for Antenna height is specified in Appendix I.

b) <u>Licensed Frequency</u> - Antennas shall only transmit or receive frequencies that are license by the FCC to the Attaching Entity or Wireless Pole Sublicensee. No third party agreements are accepted for non-licensed Attaching Entities to transmit or receive frequencies of another FCC-licensed entity. Frequency bands listed by the FCC to be unlicensed, and available for open use, may be transmitted or received, as long as they do not cause interference with another Attaching Entity, FCC-license entity, or CPS Energy.

c) Attachment Position and Defined Space

(i) Antenna clearances in any direction from supply and other communications lines shall be in compliance with this Section D.3, Section D.11, Section D.12, and Appendix I. In no circumstance shall an Antenna clearance be less than specified by the NESC.[14]

(ii) Standoff(s), supplement mounting pipe(s) and hardware cannot be greater than twelve inches (12") in height (vertically) and twelve inches (12") in length (horizontally). Antenna space cannot occupy more than three (3) individual quarters of any pole's cross-section. Additional Antenna accessory equipment may be install within the limitations of the defined Antenna Area. Antenna accessory equipment cannot interfere with the operation or use of the applicable pole by other permitted Attaching Entities or expressly CPS Energy. Antenna accessory equipment can be affixed to the Attaching Entity's standoff or Antennas. All Accessory equipment must be listed on the Application at the time of submittal and included in any post-installation inventory.

d) Emergency RF/ Power Shut-Off – Upon either CPS Energy disconnecting the electric energy source at the Electricity Network Interface Device and/or request the Attaching Entity to cease operations, the Attaching Entity shall take all actions necessary to cease all operations of the Wireless Installation including any provisions for back-up power.

4. Riser Cable. Riser cables are used to connect Antennas and Antenna accessory equipment, backhaul services, and power lines to Wireless Equipment components. All Riser Cables shall be in conduit with top side weatherheads. Power cables transporting AC power shall be in separate conduit from DC power or telecommunications cable. All conduit shall be schedule 40 Rigid Steel Conduit (RSC) finished galvanized or painted to match (if required or applicable). All metallic conduit shall be bond to ground at the Antenna Area ground point and at the Wireless Equipment area ground point.

a) Type, Size and Quantity - Cables can be coaxial, fiber optic, solid or stranded metallic conductor. Hybrid cables, cable with two or more cable types enclose in one sheath, are permitted. No exposed Riser cables, Riser

[14] Rule 235I, 2017 NESC, C2-2017.

cables not in conduit, shall exceed the nominal size of 5/8 inch for coaxial or fiber optic, or 2 AWG for solid or stranded metallic conductor.

b) Attachment Position and Defined Space - Riser cables with conduit must be affixed to the pole with a standoff that provides 12 inches of separation from the pole. The horizontal width of the conduit standoff cannot be greater than twelve (12) inches. Conduit size and count cannot exceed either a single four inch (1-4") conduit or two two inch (2-2") conduits.

No more than three (3) total Riser conduits shall be placed on any standoff. Any bottom-side transitions flexible transition to Wireless Equipment Cabinet shall be in Liquid-tight Flexible Metal Conduit (LFMC). No exposed Riser cable slack to be stored externally. All slack to be stored in junction boxes or Wireless Equipment Cabinets within the Wireless Equipment area.

5. Radio Equipment. Radio equipment can be located in RRHs, housed in the Wireless Equipment Cabinet, or even within the Antenna itself. The most common application of radio equipment is in the RRH. Radio equipment can transmit, receive, or transceive.

a) Type, Size and Quantity - Radio equipment is not limited to size or quantity.

b) Attachment Position and Defined Space - Radio equipment is housed in other inventoried Wireless Installation components. An RRH may be install with in the Wireless Equipment Area to include internal mounting with in the Wireless Equipment Cabinet. An RRH shall not be mounted within the Antenna Area or Pole Top Space.

6. Wireless Equipment Cabinets. A Wireless Equipment Cabinet is a weathertight housing purposed to mount components of the Wireless Installation. Typical devices housed in Wireless Equipment Cabinets include: radio equipment, routers, network interface devices, splice trays, computer electronics, DC power plants, power inverters, circuit breakers, batteries, fans, heat exchangers, and assorted cable jumpers interfaces. Wireless Equipment Cabinets may be mounted directly on a pole in the unusable space (defined as the pole space from ground level to eighteen feet (18') above ground level).

a) Type, Size and Quantity – Wireless Equipment Cabinets are typically made of steel or aluminum alloys for strength and corrosion resistance. All Wireless Equipment Cabinets are to be structurally rated by the manufacture to hold any housed components, and the weight there of, as well as the

weight of the Wireless Equipment Cabinet. A Wireless Equipment Cabinet may be modular with separate divided cabinets affixed together or adjacent in a contiguous fashion. The maximum dimension for any Wireless Equipment Cabinet shall be sixty inches (60") in height, forty inches (40") in width, and twenty-four inches (24") in depth.

b) Attachment Position and Defined Space - The Wireless Equipment Cabinet must not occupy more than two (2) adjoining one-quarter (¼) cross-sections of any pole. Riser cable, conduits, and Wireless Equipment Cabinets are required to occupy the same cross-sections. The total dimension of the Wireless Equipment Cabinet, to include the total dimension of any RRH, junction boxes, and shut-off switch box, make up the total Wireless Equipment Area. The total weight of any Wireless Installation for a Wireless Equipment Area cannot exceed two-hundred pounds (200 lbs). CPS Energy will review the required PLA in order to approve the pole chosen prior to the installation of all new Wireless Equipment Cabinets to confirm that the pole is suitable for the installation. Wireless Equipment Cabinets may not be installed on:

(i) Junction poles (a pole where the CPS Energy primary electric distribution line runs in four or more directions);

(ii) Poles that are 60 feet or greater in size;

(iii) Transmission poles;

(iv) Poles with a Wireless Equipment Cabinet already installed by another Attaching Entity;

(v) Poles with cabinets containing controls such as fire alarm, police signal, or traffic signals;

(vi) Poles with capacitor controls, regulator controls, recloser controls, air-switch operating handles, or an existing electrical service entrance

(vii) Transformer poles which are not accessible to mechanized equipment (i.e., a bucket truck); and

(viii) Poles with underground electric or communication Riser conduits which are not accessible to mechanized equipment (i.e., a bucket truck).

c) Ground Installations - If the limitations of the Wireless Equipment Cabinet or Wireless Equipment Area on a pole are not compatible with the design of the Wireless Installation; ground installations may be permitted subject to CPS Energy's approval. Any Wireless Equipment Cabinet or Wireless Equipment Area must be at least four feet (4') from any applicable pole, anchor, guy, conduit, or Riser as shown in Appendix I. There are no weight limits requirement by CPS Energy on ground installations. Considerations for dimension of ground installation are based on the proximity of the Wireless Equipment Area to the pole and CPS Energy's ability to access the applicable pole. CPS Energy does not grant permission for Wireless Equipment to be located on third-party property. It is the responsibility of the Attaching Entity to secure legal authority to use such private property

d) Markings – Attaching Entities shall install signs or decals made of weather, corrosion, and UV resistant materials easily visible from the ground level. At a minimum, each sign or decal shall indicate the Antenna's owner/operator's name, emergency 24-hour contact number, and unique identifier for that Antenna site.

e) Wireless Equipment Installations - Installation of Wireless Equipment Cabinets and Wireless Equipment Area for DAS Systems may be located outside the Public Right of Way. CPS Energy does not grant permission for Wireless Installations to be located on third-party property. It is the responsibility of the Attaching Entity to secure legal authority to use such private property.

7. Conduit Requirements. Conduits described in this section refer to below ground conduits and transitions to Riser cable conduits or Wireless Equipment Cabinets.

a) Type, Size and Quantity - Below ground, all horizontal runs shall be schedule 40 PVC or SRD-11 HDPE. Transitions to above ground shall be in schedule 40 RGS conduit with galvanized finish. All coupling points shall be threaded mechanical or solvent-welded and watertight. Conduits cannot exceed a diameter of four inches (4"). No more than four (4) conduits shall be permitted to affix to Wireless Equipment Cabinets or Riser cable conduit.

b) Conduit Location - Conduits shall remain twelve inches (12") from all other Wireless Equipment below ground facilities. All conduits shall be locatable

and the responsibility of the Attaching Entity to locate per Texas law and the regulations of the Damage Prevention Councils of Texas.

8. **Backhaul Service**. Backhaul service refers to the side of the network that communicates with the core network and not between localized components of the Wireless Installation installed on the distribution pole. Backhaul service can either be wireline or wireless.

a) Wireline - Wireline backhaul service is typically fiber optic, as copper circuits do not provide the necessary bandwidth for data throughput. Copper telephone circuits and coaxial cables can as be use for wireline backhaul if bandwidth speeds allow. All provision of Section IV and Section V of the Standards apply to the installation of wireline backhaul services.

(i) *Self-Provisioned* - The Attaching Entity may provide its own backhaul service if it is also a CPS Energy Attachment Agreement and Permitted wire Attachments. The self-provisioned wire Attachment may be existing or proposed. CPS Energy will make best efforts to review both the wire Attachment Application and the Wireless Installation Application concurrently, but each Application is treated separately for contractual purposes. Applications and all associated documents must have a common reference name for any concurrent Applications review to be considered.

(ii) *Third-Party Provided* - An Attaching Entity may contract backhaul service from another Attaching Entity. The third-party provided wire Attachment may be existing or proposed. If proposed, the third-party Attaching Entity must have an executed Pole Attachment Agreement and shall submit the Attachment Applications at the same time as the Wireless Installation Application is submitted. CPS Energy will make best efforts to review both the third-party wire Attachment Application and the Wireless Installation Application concurrently, but each Application is treated separately for contractual purposes. Applications and all associated documents must have a common reference name for any concurrent Application review to be considered.

(iii) *Type of Backhaul Facility* - Typically, the backhaul facility is a wire Attachment on the same pole as the Wireless Installation.

Underground backhaul facilities are permitted when transitioning from any of the following: another CPS Energy pole line, a transportation crossing, or to an Attaching Entity installed pole. Applications with predominately all underground backhaul services will not be approved.

(iv) *Point of Demarc*ation – The Backhaul Network Interface Device is to be clearly stated on the submitted engineering drawings, as required with the Pre-Certified Equipment form and the Application, with the provider of backhaul services clearly identified. Splice cases on the messenger wire can be the point of demarcation for self-provision backhaul services. For third-party backhaul services, the Backhaul Network Interface Device must be a junction box mounted in the Wireless Equipment Area, but not in the Wireless Equipment Cabinet, or a ground vault pedestal or enclosure not mounted on the CPS Energy pole. Any junction box mounted in the Wireless Equipment Area must be labeled with the third-party backhaul provider name, Tagged (per Section III.A.7 and Appendix D Section B.6.d), and unique (pole location specific) identifying number or code for the demarcation point.

b) Wireless - The Wireless Installation has the option to use wireless backhaul services. Any Antenna for wireless backhaul services is counted towards one (1) of the three (3) total Antennas allowed. Wireless backhaul service Antennas shall comply with all the specifications listed in Appendix D, Section B.3.

(i) *Type, Size and Quantity* - All specification in Appendix D, Section B.3 shall apply. In addition, wireless backhaul Antennas shall have the specific azimuth (accurate to the degree) and the length of the link path (accurate to the tenth of a mile) listed on the submitted drawings required by the Application.

(ii) *Attachment Position and Defined Space* - All specifications in Appendix D, Section B.3 shall apply.

(iii) *Self-Provisioned* - Self-Provisioned wireless backhaul services will be approved by CPS Energy, consistent with the applicable provisions of the Wireless Installation Agreement and these Standards.

(iv) *Third-Party Provided* - Third-party wireless backhaul services are prohibited by CPS Energy.

(v) *Point of Demarcation* - No specific point of demarcation is required for wireless backhaul services. Wireless backhaul services equipment shall be integrated with the Antenna Area, Riser cable conduit, and Wireless Equipment Area.

9. **Bonding**. It is the policy and practice of CPS Energy to bond to ground on all poles installed on the CPS Energy distribution system. Attaching Entities are required to install their own specific grounding for any Wireless Installations. All of the following defined Wireless Equipment components, or pole appurtenance listed, must be bonded: (1) Antenna(s), (2) Antenna standoff(s), (3) Riser conduit(s), (4) RRH(s), and (5) Wireless Equipment Cabinets. There will be one central point of bonding at the Antenna Area and also at the Wireless Equipment Area (pole or ground mounted). Central points of bonding shall be a ground bar measuring no greater than, four inches (4") high, twelve inches (12") wide, and exactly one-fourth inch (¼") thick. Any two ground bars on a pole must be connected via #2 AWG solid wire (aluminum, copper, copper-clad aluminum, copper-clad steel) exothermically welded. All connections from wireless components with factory-installed ground posts will be bonded with solid or stranded wire mechanically (or hydraulically) crimp with lugs – the wire shall be aluminum, copper-clad aluminum, copper, copper-clad steel and between #2 AWG to #6 AWG in size. Lugs on the ground bar side will have two lug holes and two mechanical fasteners. A fastener bolt nominal thread size (or factory grounding post) for bonding shall be no smaller than one-sixteenth inch (1/16") diameter than the lug hole or ground bar hole. The closest ground bar to grade on any pole will be bonded via #2 AWG solid wire exothermically welded to ground rod. Ground rods shall be steel or copper-cad steel, 5/8-3/4 inches in diameter, and driven at least eight feet (8') below grade in undisturbed soil. All mechanical connections shall be "tool-tight" with no play or slack if manipulated by hand. All metal material bonded must be non-reactive to inhibit corrosion.

a) Existing Ground Present - An Application for any Wireless Installation shall note if a CPS Energy ground is present or not at the specific pole location proposed for the Wireless Installation. When an existing CPS Energy ground and/or an Attaching Entity ground is present, the Wireless Installation shall be bonded to existing ground rod(s) at a minimum of twelve inches (12") below grade. The ground wire size will be #2 AWG and exothermically bonded on each ground rod. All Wireless Installation ground rods shall be at a minimum twelve inches (12") from other ground rods and/or anchors.

(i) *No Sharing of CPS Energy Grounding Facilities* - Wireless Installations shall not bond to existing CPS Energy Facilities for grounding unless specifically approved in writing by CPS Energy.

b) No Ground Present – An Application for any Wireless Installation shall note if a CPS Energy ground is present or not at the specific pole location proposed for the Wireless Installation. If no ground is present, adding a CPS Energy ground may be an applicable task for any CPS Energy approved Make-Ready Work.

10. Electric Service.

a) Equipment Subject to Electric Service - Wireless Equipment requiring electrical service shall follow all applicable codes and regulations including obtaining applicable local building and/or electrical permits.

b) Compliance with CPS Energy's Electric Service Standards – The Attaching Entity shall follow all requirements provided in the applicable CPS Energy Electric Service Standards, as amended from time to time, for its Wireless Installation.

(i) *Application for Electric Service* – The Attaching Entity must make an application for electrical service from CPS Energy as required by CPS Energy's Rules and Regulations Applying to Retail Electric and Gas Service, as may be amended from time to time. The electric service application is not part of the Application for the Wireless Installation Permit.

(ii) *Unmetered Electric Rates* – CPS Energy may provide unmetered electric rates subject to the terms and conditions of CPS Energy's Electric Service Standards, as may be amended.

c) Technical Drawings of Equipment Subject to Electric Service – Technical drawings identifying all electrical specifications and requirements for the Wireless Installation shall be provided to CPS Energy as part of the Pre-Certified Equipment process outlined in Section III.A.14.

d) Point of Demarcation/Common Coupling – For all unmetered electric service, the Electricity Network Interface Device shall be the point of demarcation or point of common coupling between CPS Energy and the Attaching Entity's equipment. The location of the Electricity Network Interface Device shall be readily accessible to CPS Energy personnel or its

contractors and shall provide for a means to disconnect all electric energy and shall be permanently marked with a weather and Ultraviolet (UV) resistant sign or decal that reads: "CPS Energy Power Shut-Off Switch".

e) Backup Power – Backup power devices will be allowed under the following conditions:

(i) A Direct Current (DC) solution within a Wireless Equipment Cabinet; and

(ii) A circuit breaker installed in-line with any backup power and normal operating power.

(iii) Backup power supplied from either a fixed or portable generator is strictly prohibited.

11. Mid-span Installations. All Mid-span Installations shall be no closer than fifteen inches (15") or no further than seventy-two inches (72") from any CPS Energy Pole as provided in Appendix I.

12. Pole Top Space Installations. Any Antenna installation in the Pole Top Space portion of a distribution Pole must be on a hollow composite Pole, the engineering and installation of such is part of the Make-Ready Work. All hollow composite Poles must be approved by CPS Energy.

a) Specifications for pole-top installations on a a CPS Energy approved a hollow composite Pole include, but not limited to, the following:

(i) Not to exceed fifty-five feet (55') in height above final grade.

(ii) Retain its original ultraviolet (UV) rating for the entire life expectancy of the Pole.

(iii) Equipped with a manufacturer provided port opening at the Wireless Equipment Area and the Pole Top Space.

(iv) Pre-drill holes from the manufacture for all bolt-through connections.

(v) Additional pre-drilled holes for future Attachments, one at twelve inches (12") above the existing top communication Attachment; and one twelve inches (12") below the lowest communication Attachment.

(vi) Capped at the top level.

(vii) Weather-tight port flanges and cable boots.

(viii) Polyethylene plugs for any unused pre-drilled holes.

(ix) A structural Reserved Capacity of no less than fifteen percent (15%) of the maximum (including all existing and Application Attachments) at the time of the initial installation/Permit as provided in Appendix G.

(x) Compliant with NESC Grade B construction as provided in Appendix G.

(xi) Engineering drawings and other documentation from the manufacturer specific to the hollow composite Pole stating: pole thickness throughout the length of the pole, classification, and measured locations of all pre-drilled holes and ports.

b) Any Antenna in the Pole Top Space must not exceed thirty inches (30”) in height (vertical length) and must meet the twenty-four inches (24”) clearance requirement. All other specification for an Antenna in Appendix D shall apply. Additional specification and details for panel and round-sectored Antenna designs are provided in Appendix I.

Appendix E: CPS Energy Vertical Clearance Table

Clearance Adders: The vertical clearances required by the NESC are the absolute minimum clearance allowed by CPS Energy in order to issue a Permit. To ensure that NESC clearances are met under all reasonably anticipated circumstances, CPS Energy may require additional tolerances for movement and variances in construction to be added to the NESC requirements. The clearance values in this section include CPS Energy adders, unless otherwise noted.

Voltages are phase to ground. Clearances below are minimums based on NESC, State Law, with applicable CPS Energy clearance adders.
(All clearances should be applied under "worst-case" maximum sag conditions.)

Nature of Surface Beneath Wires	NESC Group II		NESC Group IV	NESC Group VI
	Grounded guys;[4] communication cables meeting 230C1 (ft.)	Neutrals, 230E1, (ft.)	0-750V Service drops; open supply cables meeting 230C3 (ft.)	750V–22kV open supply cables; primary (ft.)
Where wires crossing over or overhang				
1. Track rails of railroads[3]	24.0	27.0‡	28.0‡	30.0‡
2. Bridges or grade separations[7]	30.0†	30.0†	30.0†	33.0‡
3. Highways or county roads (State or Federally controlled)	18.0[1]†	22.0	22.0†	25.0‡
4. Roads, streets, alleys, or areas subject to truck traffic[1]	18.0‡	22.0‡	22.0‡	25.0‡
5. Driveways, parking lots, and alleys **not** subject to truck traffic	16.5‡	22.0‡	22.0‡,[6]	25.0‡
6. Other land traversed by vehicles, such as cultivated, grazing, forest, orchard, etc.	18.0‡	22.0‡	22.0‡,[6]	25.0‡
7. Spaces or ways, not in streets or alleys, accessible to pedestrians only[2]	11.5‡	18.0‡	18.0‡,[6]	25.0‡
Where wires run along & within the limits of road right-of-way or alleys but do not cross over or overhang the roadway or alley				
8. Roads, streets, or alleys	16.5‡	22.0‡	22.0‡,[6]	25.0‡
9. Roads where vehicle traffic is unlikely	14.5‡	22.0‡	22.0‡,[6]	25.0‡

† - State Law[5] ‡ - CPS Energy Std.

Footnotes

[1] "Truck traffic" is defined as vehicles of heights greater than 8 feet.
[2] "Pedestrian only" is defined as areas where traffic of any mobile unit higher than 8 feet is prohibited by regulations, permanent terrain conditions or otherwise is reasonably unexpected.
[3] When entering railroad right-of-ways, refer to UP checklist for additional requirements.
[4] All guys are insulated in accordance with NESC Rule 279.
[5] Texas Utility Code, § 21.041, TxDOT-Right of Way, Utility Accommodation Rules (Overhead Electric & Communications Lines).
[6] For service drops of voltages less than 300V (phase to ground), clearance may be reduced to values given in CPS Energy Service Standards.
[7] TAC Utility Code prohibits line crossings at bridges or grade separations, may be allowed 150 feet from bridge abutment with clearances given.

Appendix F: CPS Energy Attachment Clearance Requirements

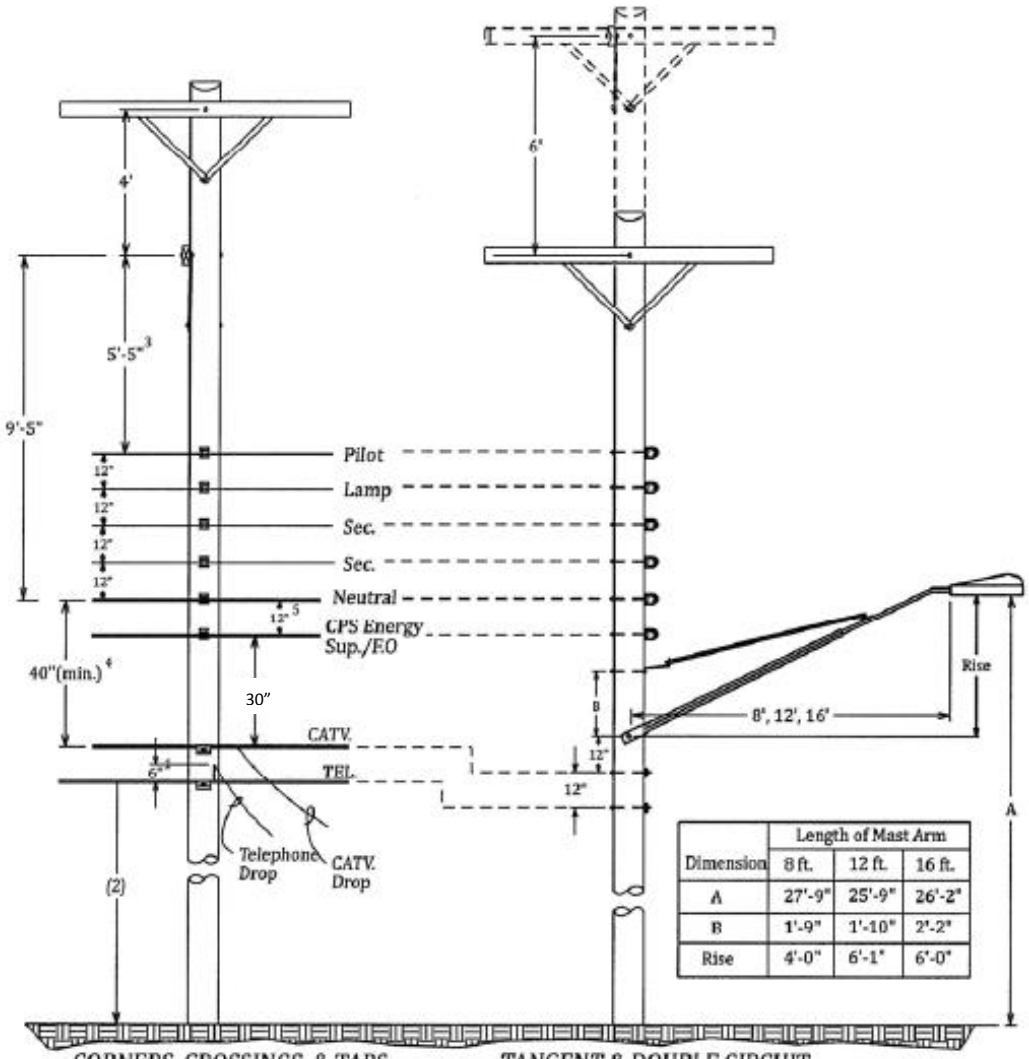

Dimension	Length of Mast Arm		
	8 ft.	12 ft.	16 ft.
A	27'-9"	25'-9"	26'-2"
B	1'-9"	1'-10"	2'-2"
Rise	4'-0"	6'-1"	6'-0"

NOTES

1 This clearance may be omitted if its omission will allow for a shorter pole to be used, provided that the Telephone Company agrees that the drop can be lowered.
2 Height at attachment shall include Clearances to the ground plus estimated sag.
3 Lamp wires and Secondary are to be removed when possible on conversions or modifications to existing installations.
4 This clearance is used when no CPS Energy Supervisory or Fiber Optic cable (Sup./F.O.) is present.
5 Increase this clearance to 16 inches for ADSS FO cable due to the constant sag charactoristics.

Appendix G: CPS Energy Pole Loading Requirements

It is the determination of CPS Energy that pole attachments can have a significant wind loading and stress effect on a pole and can cause overloading. Therefore, nothing should be attached to a pole that is not engineered to be there in advance.

1. **Engineering and Planning Qualifications:** Any Pole Loading Analysis (PLA) submitted as part of the Application package shall be signed and sealed by a licensed Professional Engineer approved by CPS Energy.

2. **PLA Submittal requirements:** Attaching Entity shall submit PDF copies of the full PLA report for each pole identified as requiring a PLA study pursuant to this Appendix G. Acceptable software for use of PLA will be a commercially available product with general industry acceptance. Should the Attaching Entity utilize a software application that CPS Energy does not possess, Attaching Entity shall make available to CPS Energy at least one software license for CPS Energy use at Attaching Entity's expense.

3. **Pole Loading Parameters:** PLA is to be performed in accordance with the requirements of **Light Loading Zone** as described the current version of the National Electric Safety Code (NESC)[15] for the San Antonio area. CPS Energy PLA Grade Requirements shall be as follows:

   - *Single Circuit*: NESC Grade C unless required to be Grade B by the current version of the NESC.
   - *Double Circuit*: NESC Grade C unless required to be Grade B by the current version of the NESC. CPS Energy may require Grade B design at "critical" double circuit areas, as identified by CPS Energy.
   - *Wireless Installations*: NESC Grade B is required for any Pole or Streetlight Pole utilized for a pole-mounted Wireless Installation.

4. **Required conditions for PLA:** CPS Energy will require PLA for the following conditions:
   - Poles with angles of greater than 10° (guyed & un-guyed) - single & double circuit
   - Poles with primary spans greater than 200 feet
   - All un-guyed poles with "break-offs"
     - 3 phase primary breakoffs only
   - All CPS Energy dead-end poles
   - All Poles with CPS Energy 2 & 3 transformer banks, reclosers, and capacitor banks
   - All Poles less than Class 3 for which 3-phase electric distribution is installed
   - All Poles with five (5) or more Attachments, other than primary, secondary and Neutral attachments

[15] NESC Rule 250, Figure 250-1, C2-2017

- All Poles or Streetlight Poles for which a Wireless Installation or Mid-span Installation is requested. For Mid-span Installations, both end-point Poles shall have a PLA completed.
- Any critical Pole identified by CPS Energy not specified in categories above, up to ten percent (10%) of total Poles per Application

5. **Reserved Capacity for Proposed Pole Change Outs**: CPS Energy shall require Reserved Capacity for any new or replaced Pole as follows:
   - *Single Circuit*: five percent (5%)
   - *Double Circuit*: fifteen percent (15%)
   - *Hollow composite Pole*: fifteen percent (15%)

6. **Pole Loading Analysis Time Limitations:** PLA analysis shall be valid for a time period of no longer than six (6) months from the time of Application submission. After this six (6) month period, a new PLA analysis will be required.

7. **Exceptions to PLA Requirements**: CPS Energy will not require PLA for the following conditions:
   - When Overlashing a 144-strand or smaller diameter and weight fiber optic or other cable
   - When placing a fiber optic cable in an existing aerial inner duct

Appendix H: CPS Energy Schedule of Pole Attachment Rates, Fees, and Charges

Although CPS Energy is exempt from the definition of the term "utility" that applies to the regulations of the Federal Communications Commission (FCC) relating to pole attachments made by providers of communications services; CPS Energy uses the current FCC formula applicable to providers of telecommunications services. CPS Energy reserves the right to adjust this Schedule of *Pole Attachment Rates, Fees, and Charges* in accordance with any changes in the FCC formula delineated below, and with updated CPS Energy cost information.

1. Application Fee

a) Wire Attachments. For wire Attachments, the Application Fee is $8.77 per CPS Energy Pole identified in the Application. *(As noted in Section II.I.2, CPS Energy will discontinue the requirement of an Application Fee for wire Attachments effective January 1, 2017.)*

b) Wireless Installations. For Wireless Installations, the Application Fee shall be $50 per Wireless Installation.

2. Annual Fees

a) Wire Attachments. The Attachment Connection Fee is the annual rental payment assessed by CPS Energy to each Attaching Entity with wire Attachments. The annual Attachment Connection Fee is determined by CPS Energy for each Attaching Entity by multiplying [Attachment Rate] x [total number of Permitted Attachments for the Attaching Entity].

(i) Overlashing an existing Permitted Attachment is not a separate Attachment and will not be subject to a separate Attachment Connection Fee.

(ii) The applicable Attachment Rate formula, the annual Attachment Rate, and the financial and operational inputs utilized by CPS Energy's in the calculation of the Attachment Rate formula are available on the CPS Energy public webpage at *www.cpsenergy.com/poleattachments*.

(iii) CPS Energy will use the Attachment Rate formula as required by law.

b) Wireless Installations. The Wireless Installation Fee is the annual rental payment assessed by CPS Energy to each Attaching Entity with Wireless Installations. The annual Wireless Installation Fee is determined by CPS Energy for each Attaching Entity by multiplying [Wireless Rate] x [total number of pole-feet per Wireless Installation] x [total number of permitted Wireless Installations owned by the Attaching Entity].

(i) The Wireless Rate shall equal the Attachment Rate.

(ii) Mid-span Installations shall be assessed the Attachment Connection Fee for the amount of Attachment space required to comply with the vertical clearance requirements of the Applicable Engineering Standards on both Poles on either side of the Mid-span Installation and at the mid-span.

3. <u>Unauthorized Attachment Charge</u>

An Attaching Entity shall pay CPS Energy, in addition to the annual Attachment Connection Fees that would have been payable for such Attachments if they had been authorized, an Unauthorized Attachment Charge as provided below:

a) For entities without a valid Pole Attachment Agreement, the Unauthorized Attachment Charge shall be determined to be $500 per Attachment per year for each Unauthorized Attachment.

b) For Attaching Entities with a valid Pole Attachment Agreement, the Unauthorized Attachment Charge shall be determined to be five (5) times the annual Attachment Rate (in effect at the time the Unauthorized Attachment is discovered) per Pole per year if the Attaching Entity does not have a Permit and the violation is self-reported or discovered through a joint inspection; with an additional sanction of $100 per Pole per year if the violation is found by CPS Energy during any inspection or during Inventory in which the Attaching Entity has declined to participate.

c) If the date on which the Unauthorized Attachment was made cannot be determined, the Unauthorized Attachment will be assumed to have been installed by the Attaching Entity on the next day following the last completed Inventory, not to exceed five (5) years.

4. <u>Unauthorized Wireless Installation Charge</u>

An Attaching Entity shall pay CPS Energy, in addition to the annual Wireless Installation Fees that would have been payable for such Wireless Installations if they had been authorized, an Unauthorized Wireless Installation Charge as provided below:

a) For entities without a valid Wireless Installation Agreement, the Unauthorized Wireless Installation Charge shall be determined to be $500 per month for each Unauthorized Wireless Installation.

b) For Attaching Entities with a valid Wireless Installation Agreement, the Unauthorized Wireless Installation Charge shall be determined to be $100 per month per Wireless Installation where CPS Energy has not issued a duly authorized Permit for the Wireless Installation to the Attaching Entity.

c) If the date on which the Unauthorized Wireless Installation was made cannot be determined, the Unauthorized Wireless Installation will be assumed to have been installed by the Attaching Entity on the next day following the last completed Inventory, not to exceed five (5) years.

5. <u>Other</u>

a) <u>Non-Compliance with Complex Transfer Process</u>

Pursuant to Section IV.B.6 of the CPS Energy Pole Attachment Standards, CPS Energy shall levy a penalty of $350 per non-compliant Attachment to the Attaching Entity failing to make the Complex Transfer in the required timeframe.

b) <u>Non-Compliance with Joint Meeting Transfer</u>

Pursuant to Section IV.B.5 of the CPS Energy Pole Attachment Standards, CPS Energy shall levy a penalty of $350 per day to the non-compliant Attaching Entity that fails to attend and/or fails to complete the transfer or modification of a Wireless Installation within the required Joint Meeting Transfer ten (10) day timeframe. The penalty shall become automatically effective on the eleventh (11) day following the Joint Meeting Transfer.

c) <u>Safety Violation Assessment Charge</u>

The Safety Violation Assessment Charge is $500 per Safety Violation identified.

d) <u>Tracing Line Ownership Fee</u>

In the event any Attachment or Wireless Installation is untagged and CPS Energy must determine the owner's identity to address the repair or maintenance of a CPS Energy Pole, equipment, or facility that CPS Energy cannot undertake absent removal or transfer of said Attachment or Wireless Installation; CPS Energy shall bill the owner of the Attachment or Wireless Installation for time reasonably undertaken by CPS Energy to determine the identity of the owner of the Attachments or Wireless Installation. The Attaching Entity that owns the untagged Attachment or Wireless Installation shall pay CPS Energy the Tracing Line Ownership Fee of $150.00 for the first hour plus $100.00 per hour thereafter. Partial hours shall be rounded up. CPS Energy shall bill the Attaching Entity within thirty (30) days of determining the Attaching Entity's identity.

Appendix I: CPS Energy Wireless Installation Diagrams

I1: CPS Energy Typical Wireless Installation – Distribution Pole

I2: CPS Energy Typical Wireless Installation – Mid-span Installation

I3: CPS Energy Typical Wireless Installation – Streetlight Pole

I4: CPS Energy Typical Wireless Installation – Pole Top Space (Panel)

I5: CPS Energy Typical Wireless Installation – Pole Top Space (Round-Sectored)

I1: CPS Energy Typical Wireless Installation – Distribution Pole

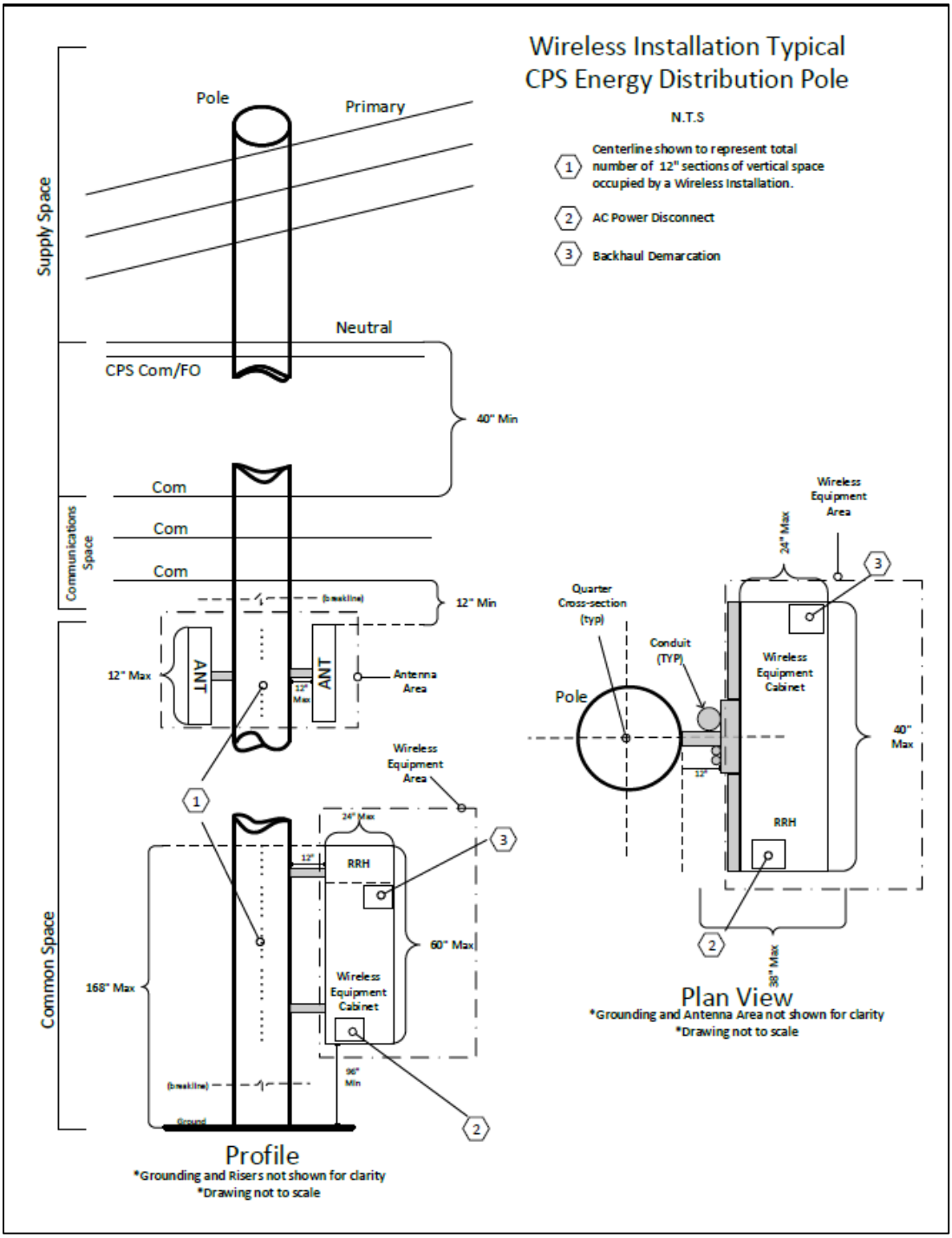

I2: CPS Energy Typical Wireless Installation – Mid-span Installation

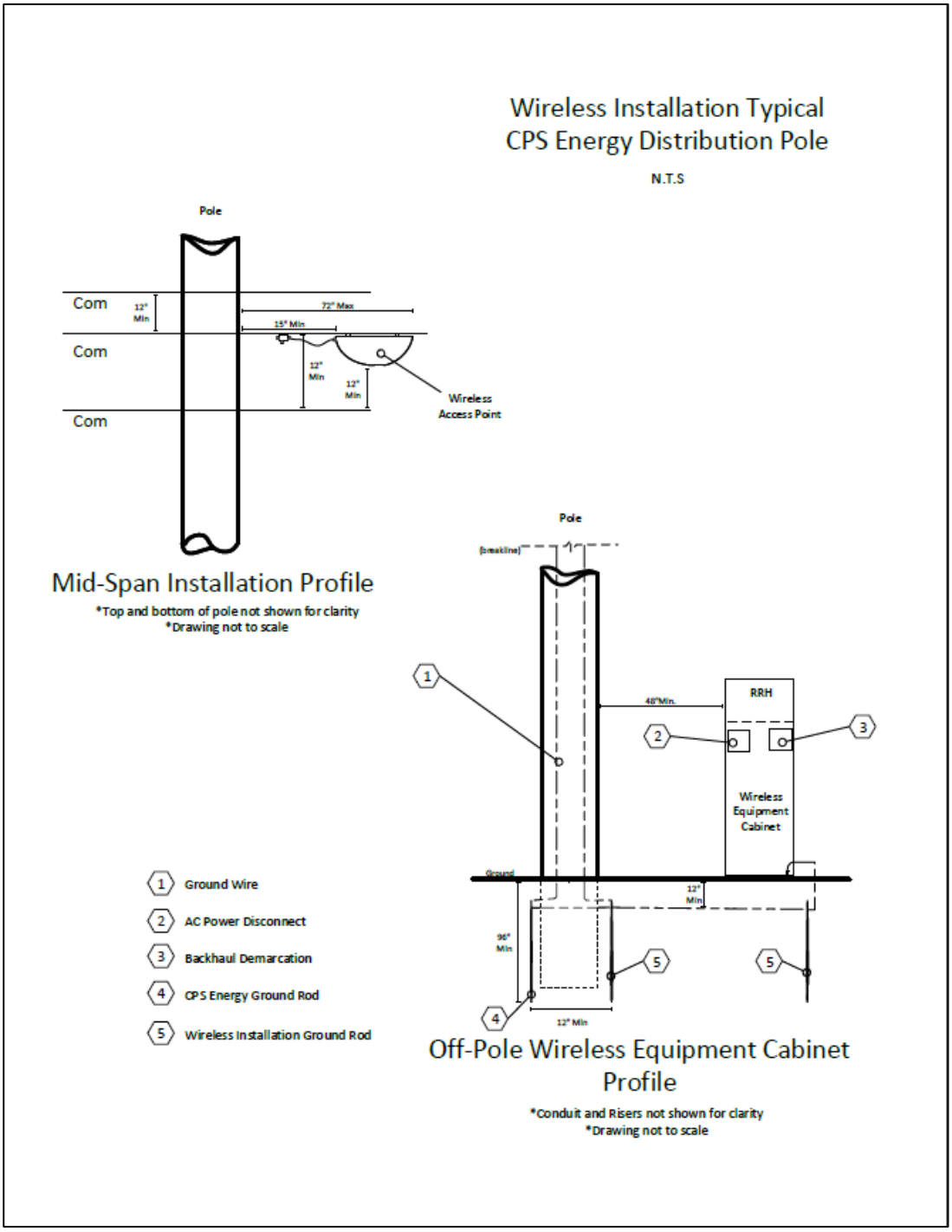

I3: CPS Energy Typical Wireless Installation – Streetlight Pole

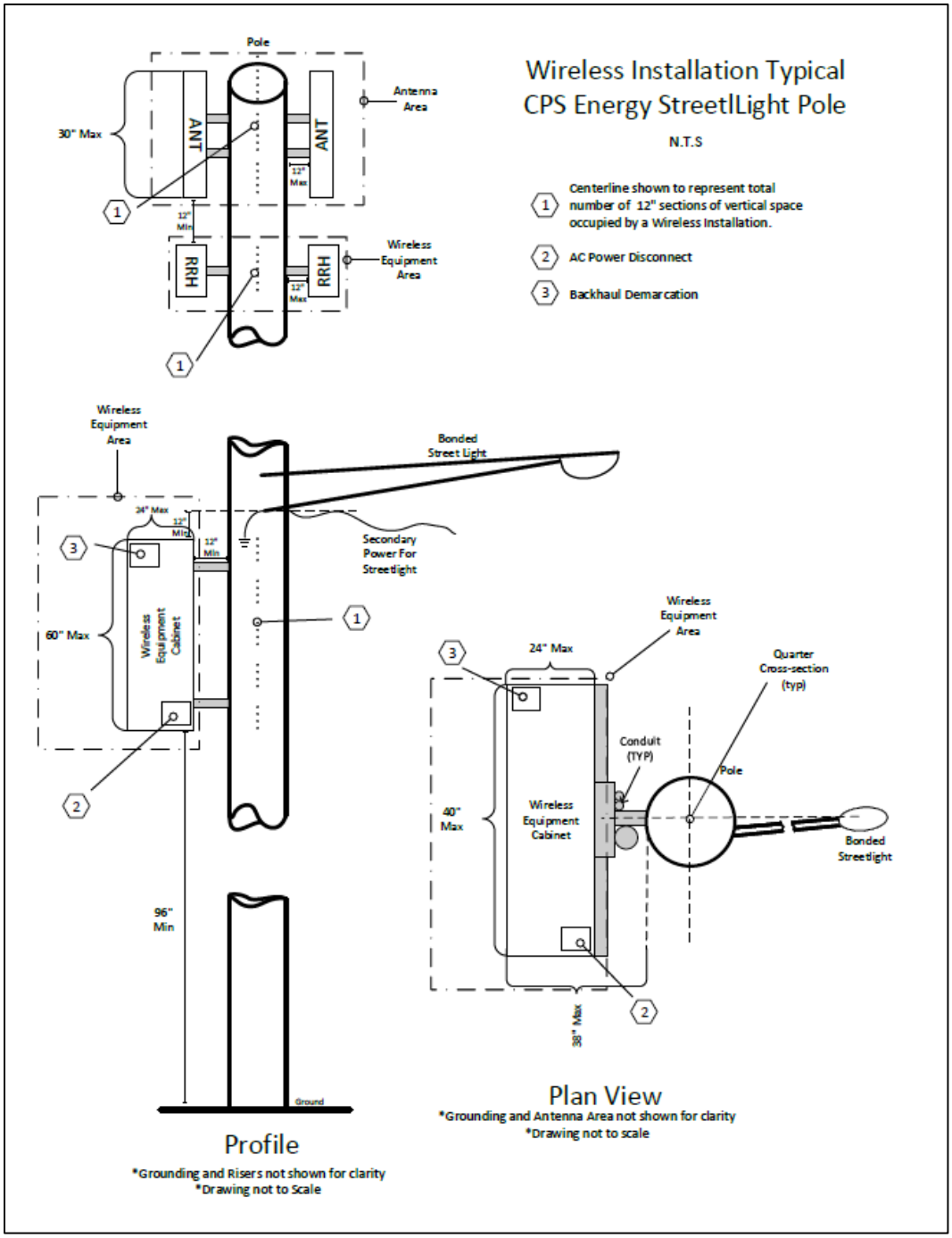

I4: CPS Energy Typical Wireless Installation – Pole Top Space (Panel)

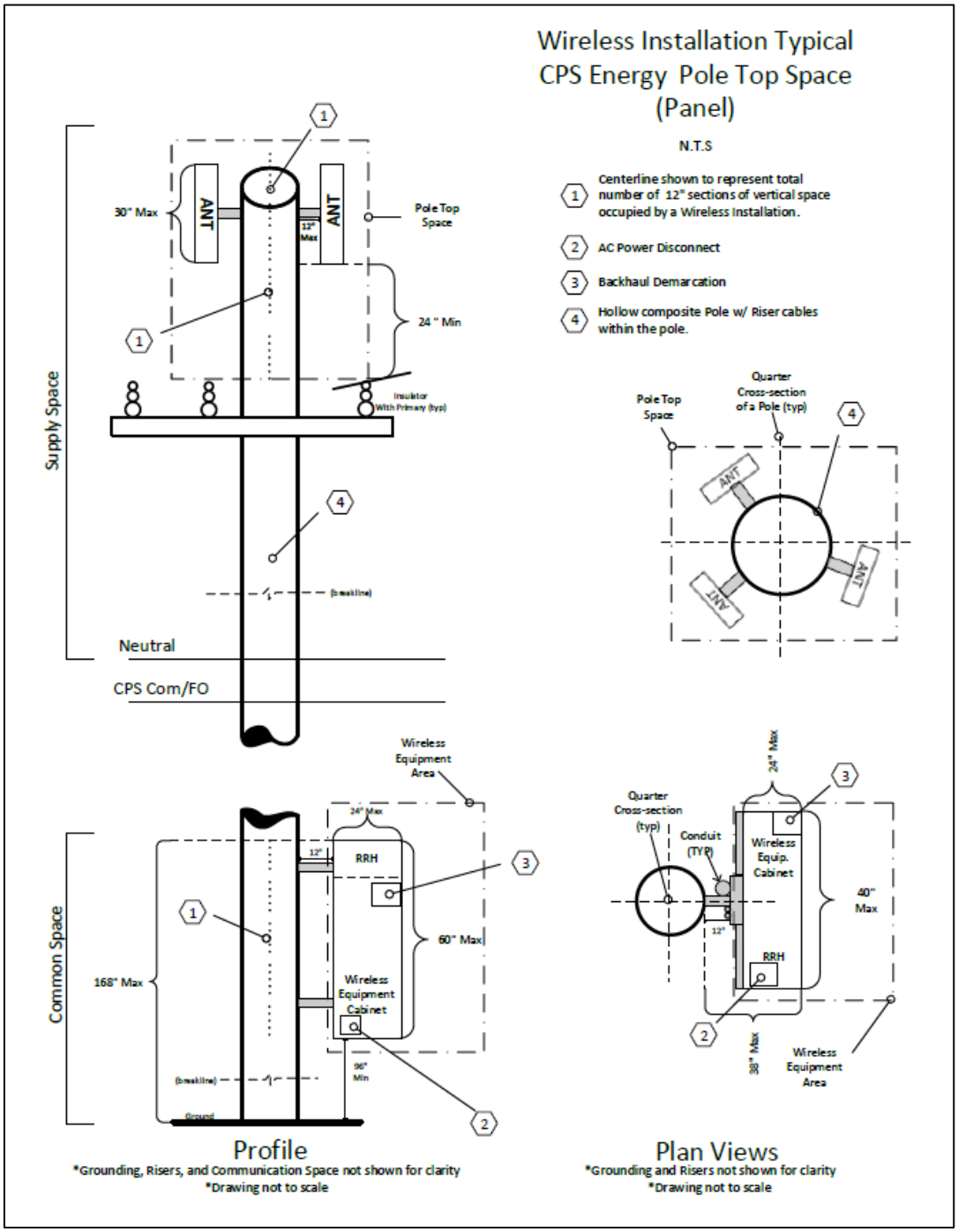

I5: CPS Energy Typical Wireless Installation – Pole Top Space (Round-Sectored)

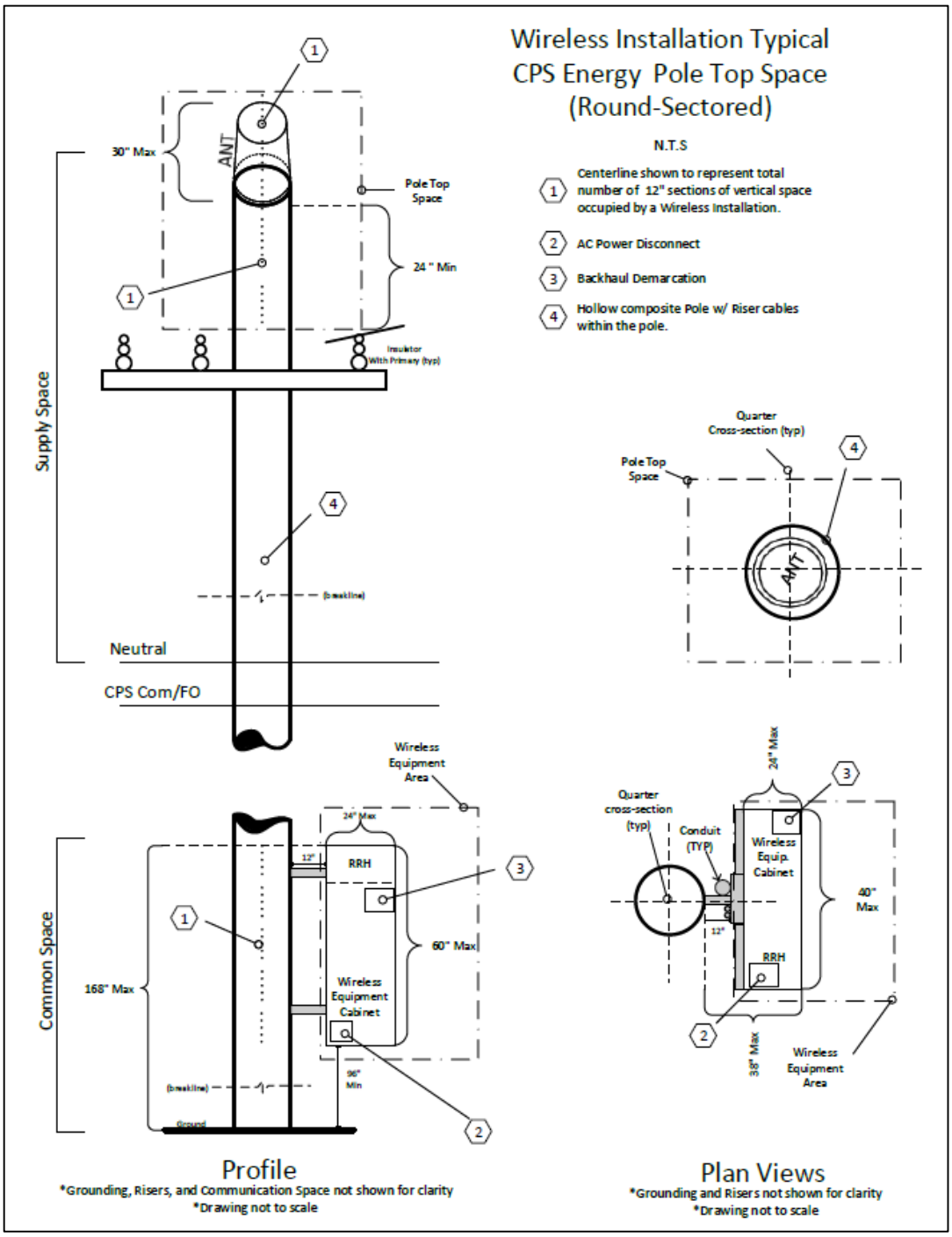

Appendix J: *Reserved for Future Use*

Appendix K: CPS Energy Pole Attachment List & Detail

K1: Pole Attachment Tag List as of August 1, 2016

Tag Number	Company Name	Tag Number	Company Name
1	CPS Energy	25	Time Warner Telecom
2	Time Warner Cable	26	Zachary Construction Corp.
3	ATT/SBC	27	Southwest I.S.D.
4	Grande Communication	28	Northeast I.S.D.
5	MCI	29	Qwest Communications
6	COSA Traffic	30	Fiberlight, L.L.C.
7	AT&T Long Distance	31	New Path Networks, L.L.C.
8	Time Warner Telecom	32	Level 3 Communications, L.L.C.
9	Tel-West	33	Schertz-Cibolo-Universal City I.S.D.
10	GVTC	34	American Tower Corp.
11	GVCS	35	Beldon Roofing Company
12	Fort Sam Houston	36	Ancira Winton Chevrolet, Inc.
13	Carrell Communications	37	Texas A&M University
14	Rapid Communications	38	Weatherford Artificial Lift Systems, Inc.
15	VIA Metropolitan Transit	39	Schlumberger Technology Corporation, Inc.
16	Verizon GTE	40	NextEra FiberNet, L.L.C. dba FPL FiberNet
17	Alpheus Communications	41	Zayo Group, L.L.C.
18	Holt Texas LTD dba Holt CAT	42	APOGEE
19	Martin Marietta Materials	43	Windstream KDL, Inc.
20	University of Incarnate Word	44	University Health System
21	Somerset I.S.D.	45	Witte Museum
22	TCG (Houston) AT&T Local	46	Conterra
23	Leon Valley	47	Google Fiber Texas, L.L.C
24	SAWS		

K2: Pole Attachment Tag Detail

For the purposes of Tagging an Attachment, Overlash or Wireless Installation (including a Mid-span Installation), CPS Energy requires the use of a Tag placed within twelve inches (12") of a Pole on the wires and cables, coded by number, color, or other means that will readily identify the owner of the Attachment at a Pole from ground level. The Tag shall be as specified below or consistent with accepted communication industry standards or other Attaching Entity supplied tag approved in writing by CPS Energy, provided the Tag is made of materials which are weather, corrosion, and Ultraviolet (UV) resistant.

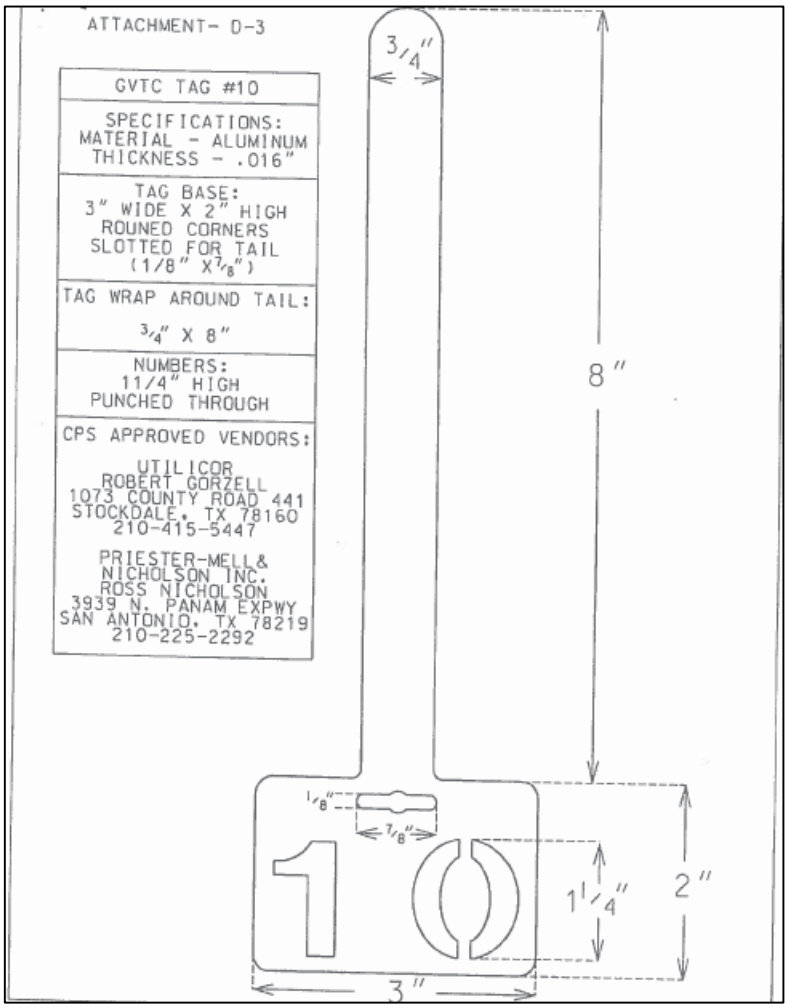

Appendix L: *Reserved for Future Use*

Appendix M: CPS Energy Equal Employment Opportunity and Anti-Harassment Policy

Equal Employment Opportunity and Anti-Harassment Policy

Policy Statement: Promoting dignity and respect for CPS Energy's diverse multicultural and multiethnic workforce is the responsibility of all CPS Energy employees. CPS Energy is committed to providing a work environment free of harassment or discrimination. Harassment, including sexual harassment, undermines the integrity of employment and other working relationships. All employees and persons with business relationships with the company are to be treated with dignity and respect.

Purpose: This policy prohibits discrimination, sexual harassment, all other types of harassment and retaliation that is sexual in nature or based on an individual's race, color, religion, sex, age, national origin, gender, sexual orientation, gender identity, disability, genetic information, veteran status which creates an intimidating, hostile or offensive work environment, or which inappropriately and adversely affects an individual's employment opportunities.

Scope: This policy applies to all CPS Energy employees, vendors, contractors and customers, as well as anyone with a business relationship with the company.

It also prohibits harassment at offsite events directly related to the company's business, including business trips and social activities.

This policy applies, but is not limited, to recruiting, hiring, transfers, promotions, terminations, compensation and benefits, reductions-in-force, disciplinary actions, work assignments, and company-sponsored events.

Prohibited Conduct: Prohibited conduct includes actions that are sexual in nature or based on an individual's race, color, religion, sex, age, national origin, gender, sexual orientation, gender identity, disability, genetic information, veteran status and other basis prohibited by law. Following are descriptions of conduct prohibited under this policy.

Discrimination	Unequal treatment based on race, color, religion, sex, age, national origin, gender, sexual orientation, gender identity, disability, genetic information or veteran status. This policy prohibits supervisors or managers from basing employment decisions – such as an employee's work assignments, performance evaluations, or promotions – on the characteristics listed in the preceding paragraph.
Sexual Harassment	Unwanted sexual advances, requests for sexual favors or other verbal or physical conduct of a sexual nature when: • Submission to such conduct is an explicit or implicit term or condition of employment or • Submission to or rejection of such conduct is used as a basis for employment decisions affecting such an individual or • The conduct has the purpose or effect of interfering with work performance or creating a hostile, intimidating or offensive work environment. Sexual harassment typically involves severe or pervasive conduct. This policy prohibits males from sexually harassing females or other males and females from sexually harassing males or other females.

Page 1 of 4

Equal Employment Opportunity and Anti-Harassment Policy

Harassment	Unwelcome verbal or non-verbal (physical and visual) conduct based upon race, color, religion, sex, age, national origin, gender, sexual orientation, gender identity, disability, genetic information or veteran status Any behavior or comment that creates a hostile, intimidating or offensive work environment or which adversely affects an individual's employment Harassment can take a variety of forms, may involve CPS Energy employees in any position and at any level of responsibility (for example, peer to peer, supervisor/ manager to subordinate, and subordinate to supervisor/manager). It can occur between individuals of the same protected category (for example, members of the same race or gender can harass each other).
Hostile Work Environment	Conduct that unreasonably interferes with work performance or creates an intimidating or offensive work environment. A hostile work environment under the law is determined by all circumstances, which may include the frequency of the conduct, its severity or whether it is physically threatening or humiliating. Although isolated incidents generally are not sufficiently severe and pervasive to violate the law, a pattern of such incidents may be unlawful.
Retaliation	Unequal treatment or harassment because an employee has made a good-faith report of harassment or has cooperated with or participated in an investigation conducted under this policy. Retaliation includes both adverse employment decisions, such as demotion, suspension, or denial of an employment benefit, and informal retaliatory conduct, such as ignoring or excluding an individual from normal interaction.
Other Prohibited Conduct	Unwelcome or offensive conduct that could lead to harassment or a hostile work environment. Following are examples of conduct that is prohibited under this policy: • Derogatory or disparaging comments, epithets, slurs, graffiti, jokes, cartoons, email or voicemail messages, graphic material; • Slogans, stickers, posters, clothing, etc. making reference to stereotypes of protected categories; • Displaying sexually suggestive or lewd objects, pictures, drawings, graffiti; or making comments, actions, gestures or sounds; or unwelcome flirtations, advances and propositions; • Lewd or sexually graphic or intrusive questions or comments;

Page 2 of 4

Equal Employment Opportunity and Anti-Harassment Policy

	• Unwelcome, offensive physical contact such as touching, hugging, kissing, patting, pinching, assault, or impeding or blocking movements; • Sexually derogatory or disparaging comments, graffiti or graphic material, including email; • Sexually profane, abusive, demeaning or vulgar language; and • Threats of a sexual nature or intimidation based on sex.

Reporting a Complaint:

For CPS Energy to correct the behavior, the company must know about it. Therefore, it is essential that complaints be made in a timely manner to ensure prompt resolution.

If you believe you have been:

- Discriminated against
- Sexually harassed
- Harassed for any other reason
- Witnessed discrimination or harassment, or
- Retaliated against

You must immediately notify any of the following individuals:

- Supervisor (If the alleged offender is your supervisor, report the behavior immediately to any of the other individuals listed.)
- Department or division management
- Any member of HR Employee Relations
- Employee Relations direct line, (210) 353-3996
- CPS Energy Hotline, (888) 255-8144

Employees are strongly encouraged to report any perceived harassing behavior immediately so that CPS Energy can stop harassment before it becomes severe or pervasive.

Supervisor Responsibility:

Supervisors or managers must promptly notify HR Employee Relations staff if they:

- Receive a complaint of discrimination or harassment;
- Receive information concerning possible discrimination or harassment; or
- Observe conduct that may be discrimination or harassment.

Investigations:

HR Employee Relations staff will promptly investigate complaints. If you reported your complaint to your supervisor, area manager, CPS Energy Hotline, or any HR staff not in Employee Relations, your report will be forwarded to CPS Energy HR Employee Relations staff immediately to begin the investigation.

CPS Energy Employee Relations staff will conduct a reasonable and thorough investigation in as confidential a manner as possible.

Page 3 of 4

Equal Employment Opportunity and Anti-Harassment Policy

Because CPS Energy will need to investigate the complaint, it is critical that the complainant and witnesses cooperate with the investigation by agreeing to an interview and providing as much information as possible. All employees are required to cooperate with any investigation, maintain confidentiality and be truthful at all times. Failure to do so may result in corrective action up to and including termination.

If the allegations are brought by or involve a third party, such as a contractor or vendor, CPS Energy will cooperate with the employer of the third party. In this regard, CPS Energy may take any remedial action it deems appropriate.

If after reporting the harassment or offensive behavior, no investigation occurs (e.g. you are not promptly interviewed by CPS Energy Employee Relations staff), or the behavior does not stop at once, report the discrimination or harassment to another person designated on the list in the Reporting a Complaint section.

Prompt corrective action will be taken for violations of this policy, whether it involves harassment between co-workers, by managers or supervisors or by customers, vendors, or other third parties doing business with CPS Energy.

Any substantiated violation of this policy may result in corrective action up to and including termination.

Resolution of Complaint:

Employees making a complaint or report will be notified at the investigation's conclusion.

If harassment, discrimination, or retaliation occurs after the complaint, the employee should immediately notify the supervisor, department or division management, Employee Relations staff, Employee Relations direct line, or CPS Energy Hotline.

Approval:

Paula Gold-Williams
Group EVP, Financial & Administrative Services

10/12/15
Date

Policy Effective Date: 10/1/15

Appendix N: CPS Energy Information Systems Use Policy

Information Systems Use Policy

Policy

CPS Energy requires employees to use information systems constructively, respectfully and responsibly. Employees should maintain a work environment free of harassment and inappropriate behavior. All information created, stored or transmitted on CPS Energy information systems are the property of CPS Energy; employees do not have the expectation of privacy.

Nothing in this policy is intended to interfere with an employee's rights under any applicable federal and state law.

Purpose

The purpose of this policy is to ensure employees understand the importance of proper use of information systems, including social media, smartphones, and tablets.

Scope

This policy applies to all employees, including temporary employees, and contractors.

Definitions

Term	Definition
Social Media	Internet and mobile-based tools used for sharing information and interacting with others; some examples: Twitter, Facebook, LinkedIn, YouTube, Flickr, weblogs, podcasts, wikis, forums, chat rooms and message boards.
Information System	Any combination of information technology that supports business operations, management and decision making. This includes but is not limited to computers/servers, smartphones, tablets, business applications (SAP and email) and telephony systems.
Smartphone	A cellular device with built-in applications and Internet access. These devices provide a digital voice service, text messaging, e-mail, still and video cameras, and other applications. The term smartphone include devices such as a Blackberry, iPhone, etc.
Mobile Device Management (MDM)	An application used to remotely managed and monitor smartphones.

Page 1 of 5

Information Systems Use Policy

Apple ID	An ID tied to an Apple Smartphone which is required to download or purchase apps from the app store.
Un-Authorized Devices	Any device that is connected to a CPS Energy computer, network, or information system that has not been approved by Management. Such devices may include, but are not limited to un-approved USB storage devices, wireless routers, or Portable Music Players

Use of Company Information Systems

Employees should act with integrity and respect when using Company information systems.

Proper Use of E-mail – Employees (and authorized Contractors) should exercise good judgment in sending e-mail. E-mail is not secure, is discoverable in litigation and often is subject to open records requests.

Proper Internet Usage – Only employees (and authorized Contractors) may use Company information systems to access on-line services and the Internet. Employees must:

- Maintain password confidentiality; not share it with others without Enterprise Information Technology (EIT) or Enterprise IT Security (EITS) approval
- Respect laws related to material copyrighted or patented, trademarked or otherwise considered intellectual property
- Load software, freeware or shareware on Company information systems only with authorization from EIT and supervision

Use of Social Media by CPS Energy

CPS Energy uses social media to promote Company products and services to customers, and to:

- Communicate with customers about CPS Energy services
- Educate customers about the Company
- Provide timely updates during inclement weather and emergencies

Representing CPS Energy on Social Media Sites

Only persons designated by CPS Energy are allowed to represent CPS Energy on social media sites. Contact Corporate Communications for guidance.

CPS Energy employees who represent the Company in the public domain must ensure their profile and related content remains professional and is consistent with CPS branding.

Information Systems Use Policy

Employee Participation in Social Media

CPS Energy recognizes that social media and emerging technologies are changing the methods people use to communicate and collaborate. Employees should remember that the Web is an open technology and an individual's identity can be revealed and traced back to its author.

Employees engaging in social media conversations about CPS Energy must:

- Disclose he/she is an employee of CPS Energy and describe his/her role at the Company; temporary or contract employees must disclose their relationship to CPS Energy
- Include a disclaimer such as "This is my opinion and doesn't necessarily reflect the position of CPS Energy," unless one is an official Company spokesperson; without such clarification, even when posting as an individual, people may perceive an employee to be posting on behalf of the Company
- Act responsibly and ethically
- Protect confidential information
- Refrain from disparaging CPS Energy, its employees, supervision and customers
- Refrain from engaging in bullying, vulgar or abusive language, personal attacks, or use offensive or discriminatory terms toward specific groups or individuals
- Refrain from posting video, photos or other media that may be perceived as vulgar, confrontational or discriminatory
- Respect copyright and fair-use laws; always cite sources and, when possible, link back to the information being shared
- Never use a CPS Energy e-mail address, phone number or contact information; only use a personal screen name, title, or e-mail address
    - Exceptions: CPS Energy contact information may be used for sites related to professional organizations and/or professional networking, such as LinkedIn

CPS Energy employees are encouraged to use privacy settings that will protect their personal information.

Protecting Confidential Information

To protect CPS Energy confidential information, it is important that employees:

- Never disclose business confidential or proprietary financial or operating information related to CPS Energy
- Do not post video, photos or other media that displays CPS Energy facilities, property or personnel without written approval from Corporate

Page 3 of 5

Information Systems Use Policy

Communications

- Never share information about CPS Energy customers
- Do not disclose personal information, including a photo or likeness, of customers or employees without their written permission
- Do not use CPS Energy's logo or other copyrighted information

Personal Use of Company Information Systems

Company information systems, social sites, smartphones, and tablets may be used by employees for reasonable personal use, unless prohibited by their supervisors, and provided that such use does not:

- Interfere with CPS Energy business or productivity
- Violate any Company policies or laws
- Result in financial cost to CPS Energy

Inappropriate Use of Information Systems

The following are some examples of the inappropriate use of CPS Energy information systems:

- Hacking into computer systems or possession of hacker tools
- Managing a personal business or using for personal gain
- Searching for employment outside CPS Energy
- Sending chain letters, soliciting money or other contributions
- Removing communications equipment without authorization
- Attaching un-authorized devices to CPS Energy computers; such devices may include un-approved USB storage devices, wireless routers, or portable music players
- Deleting work products prior to termination
- Bullying, harassing or discriminating behavior accessing, sending or soliciting sexually oriented messages, images or prohibited websites

Monitoring of Social Media and E-mail

As with e-mail, an employee's use of social media is subject to monitoring and CPS Energy reserves the right to remove or report inappropriate content, including that of CPS Energy employees.

Use of Company Smartphones

All CPS Energy issued iPhone's will come with the MDM application preinstalled. This application comes with its own set of security and technical device policies. These technical policies are a requirement for all personnel using CPS Energy issued smartphone's and can only be changed by MDM administrators.

This will ensure the confidentiality, integrity and availability of CPS Energy data and device.

Personnel with a CPS Energy-issued smartphone may not:

Page 4 of 5

Information Systems Use Policy

- Connect the smartphone to non CPS Energy issued computers.
- Use a personal Apple ID or a personal email to create an Apple ID; all Apple IDs must be tied to a CPS Energy email.
- Use CPS Energy P-Cards to purchase applications, music, or movies.

Use of Third Party Applications on Smartphones	CPS Energy is responsible for the support of approved third party applications. A complete list of approved applications can be found in the MDM application.
Reservation of Rights	CPS Energy reserves the right to wipe any and all data from a company-issued device at any time without prior notice. The device will then be restored to factory and corporate default settings.
Lost and Stolen Devices	Personnel must immediately contact the EIT Service Desk at ext. 2020 (210-353-2020), in the event their device smartphone is lost or stolen. This will ensure the device is wiped in accordance with internal security protocols.
Reporting Concerns	Employees should report violations of this policy to their supervisor, Human Resources or the Ethics Hotline, 1-888-255-8144.
Corrective Action	Failure to follow this policy will result in corrective action up to and including termination.
Approval Date:	7/23/2014
Effective Date	7/24/2014

Page 5 of 5

Appendix O: CPS Energy Tree Trimming Specifications

I. GENERAL

1.0. The Contractor shall (except as otherwise provided for in the Specifications) furnish the materials, supplies, labor, equipment and perform the Services for tree- and brush-cutting maintenance, including, but not limited to, pruning or removal of branches or entire trees, chemical treatment and right-of-way clearing to protect electrical conductors and other CPS Energy equipment from vegetation interference and physical access restriction (i.e., bucket truck access, etc., via pathways or roads).

2.0. All materials which are removed, or which are subject to being removed from various locations under the scope of this Contract, shall become the property of the Contractor at the time the materials are first handled by Contractor in connection with said Services.

II. SCOPE OF SERVICES

1.0 SCOPE

1.1 Aoolication. This Specification covers the mtmmum acceptable requirements for contract tree-care operations on CPS Energy electric and gas easements and rights of way in order to provide line-clearance and access to facilities.

1.2 Applicable Standard. Tree-care operations covered by this Specification shall be performed in accordance with the national standards listed below, except where it conflicts with the requirements of this Specification. The order of precedence shall be this specification, then the following standards:

1.2.1 ANSI Zl33.1: Safety Requirements for Tree-Care Operations: Pruning, Trimming, Repairing, Maintaining, and Removing Trees; and Cutting Brush.

1.2.2 OSHA 1910.269: Training Requirements for Line-Clearance Tree Trimmers (LCTTs) and Trainees regarding training, first aid/CPR, job briefing, personal-protection equipment, materials handling and mechanical equipment.

1.2.3 OSHA 1910.333: Electric Safe Work Practice- Standard for climbers or aerial lift operators for utility or line-clearance contractors, or other non-LCTTs who work within 10 feet of wires.

1.2.4 ANSI A300: Standard Practices for Trees, Shrubs and Other Woody-Plant Maintenance.

1.2.5 "Pruning Trees Near Electric Utility Lines: A field Pocket Guide for Qualified Line-Clearance Tree Workers;" by Dr. Alex L. Shiga.

1.3 Application of Herbicides. Any person supervising the application of herbicides for the purpose of clearing vegetation from CPS Energy property (including easements) shall possess all necessary Federal, State and/or local authorizations. For example, the Contractor, when required by law, shall possess a valid Texas Department of Agriculture (TDOA) certified Applicator's License, and/or a valid license from the Texas Structural Pest Control Board (TSPCB).

Chemical herbicides shall be applied according to approved TDOA and TSPCB regulations and procedures. Standard safety and health practices shall also be followed during applications. Care shall be taken to avoid contamination of any surface or ground waters, or of any private property adjacent to CPS Energy properties or easements.

2.0 PERFORMANCE REQUIREMENTS

2.1 General. The Contractor shall be responsible for tree and brush maintenance, to include removal of branches or entire trees as provided herein, and right-of-way clearing to protect electrical conductors and equipment from tree interference and physical access restriction (i.e., bucket truck access, etc. via pathways or roads). Contractor shall utilize all accepted arboricultural pruning practices as described below and in the ANSI A300 standard.

2.2 Notification. Contractor shall distribute CPS Energy-approved door notification fliers on each property prior to initiating work; this notification shall be a minimum of three and a maximum of fifteen working days prior to work initiation. Direct customer contact, by means of a courtesy door knock, shall be attempted before entering the customer's property or before trimming is begun on adjacent property. Every attempt will be made to respect the customer's private property rights while performing line-clearance Services.

2.3 Customer Refusal. All customer refusals to allow proper trimming shall be referred to the Contractor Crew Supervisor at the end of each workday. If Contractor Supervision is unable to secure permission to trim, the proper CPS Energy "Refusal" document shall be completed and submitted to the CPS Energy Inspector within 48 hours for action and follow-up.

2.4 Clearance. The Contractor shall provide minimum tree-to-conductor clearances of three (3) feet on service drops, ten (10) feet on distribution conductors, and twenty-five (25) feet on transmission conductors. Specific tree-specie growth rates are to be taken into consideration when determining clearances (fast growth rate - more clearance required). "Cycle-buster" trees (willow, chinaberry, etc.) under circuit feeder/backbone lines will be given targeted focus for total removal.

2.5 Pruning/Cutting Requirements. The following practices shall be utilized (Reference: ANSI A300; Shigo Pruning Guide):

- Techniques consistent with the practices of natural, lateral and drop-crotch pruning shall be utilized;
- Cuts are to be made back to the main stem or to a branch which is at least one-third the diameter of the portion being removed. Stub-cuts are not allowed without prior CPS Inspector and customer discussion;
- Living branches shall be removed by making cuts as close as possible to the outer branch collar. Dead limbs shall be cut as close as possible, but not into the living tissue that surrounds the dead branch at the base;
- Precautions shall be taken to avoid stripping or tearing of bark when making the final pruning cuts on limbs;
- A minimum of cuts should be utilized to achieve required clearances;
- All limbs which appear structurally unsound and could come in contact with primary or secondary lines if broken or hinged down, shall be removed or cut back to a suitable lateral;
- Aesthetics of streetside and high-visibility trees shall be considered when
- determining the location of final pruning cuts. Trees requiring major or drastic pruning shall be discussed with the property owner or CPS Energy Inspector prior to initiating work;
- All dead branches overhanging or leaning towards primary conductors shall
- be removed;
- Contract crews shall adhere to all CPS Energy and municipal oak-wilt suppression requirements. All oak wounds are to be painted before leaving each tree; tools are to be disinfected with an approved sterilant solution after pruning any oak within one mile of an oak-wilt center. (See Exhibit C, titled "Oak Wilt Suppression Procedures," for additional requirements.)

2.6 Tree Removal. An effort shall be made to remove all fast or tall-growing trees directly below primary conductors and to treat the stump with an approved herbicide; but, in no instance, shall a tree be removed without first obtaining written permission from the owner. Contractor shall follow all requirements of the City of San Antonio Tree Preservation Ordinance when removing trees from public rights of way in commercial or designated Historic Districts (removals> 6 inches diameter at breast height require a City permit).

2.7 Material Removal and Management. Immediately after completion of the work at each location, the Contractor shall remove all equipment and manage all brush, vegetation and debris in conformity with all applicable Federal, State and City ordinances and regulations.

When feasible, and without additional cost to CPS Energy, Contractor is encouraged to facilitate the use of, rather than the disposal of, the vegetative material which results from line-clearance activities. Such facilitation may be in the form of directing the material to composting operations rather than to disposal facilities; minimizing the number of logs

which are mixed with the chipped material; uniformly chipping the material to the finest size of chips Contractor's equipment is capable of producing, etc.

2.7.1 Management Facility Site. The Contractor shall be responsible for providing CPS Energy a list of brush-management facilities to be used by Contractor in the performance of the work. These facilities shall be strategically located in the CPS Energy service area so that travel time to and from the job will be kept to a mtmmum. Contractor shall secure CPS Energy's written approval of such facilities prior to receipt by those facilities of brush and any other vegetation. Any facility used to dispose of material from CPS Energy line-clearance activities shall be properly permitted and zoned to receive such material. Documentation of that fact shall be provided to CPS Energy prior to use of any such type of facility. Any modifications or additions to the list will be submitted in writing to CPS Energy for approval prior to use of new management facilities.

Dumping charges associated with the disposal of brush and any other vegetation, if applicable, shall be reimbursed by CPS at actual cost provided Contractor furnishes CPS with the receipts to verify actual costs.

2.7.2 Trips. All trips to management facilities shall be made by only a mmtmum number of personnel. In the case of a manual crew, only the driver shall go. In the case of a bucket crew, brush will be picked up and taken to the facility by the follow-up chipper crew. In either case, work will continue for the trimmer crew.

2.8 Safety. All work shall be performed in accordance with established safety practices, including, but not limited to, those specified in ANSI Z133.1. The Contractor shall be solely and completely responsible for conditions on the jobsite, including the safety of all persons and property during performance of the work. This requirement will apply continuously and will not be limited to normal working hours. CPS Energy's evaluation of Contractor performance is intended to include review of the adequacy of the Contractor's safety measures in, on or near the work site. The Contractor is to provide and use all protective equipment necessary for the protection of Contractor's employees and general public, and to guard against interfering with the normal operation of CPS Energy facilities. Contractor shall meet all training and certification requirements outlined in OSHA 1910.269.

2.9 Service Interruption. In the event of a service interruption to a customer caused by a Contractor's crew in the performance of work, said crew shall immediately notify CPS Energy System Operations at 227-1743, giving the location and nature of the trouble. The Inspector shall also be notified within one (1) hour.

OAK WILT SUPPRESSION PROCEDURES

Introduction

Oak wilt is a very serious fungal disease which is killing oaks in central Texas at epidemic proportions. The fungus invades and plugs the water and nutrient transport systems in the tree and almost always causes death. All oaks are susceptible, especially red oaks (Spanish, Shumard, Blackjack) and live oaks. White oaks (Post, Bur, Chinquapin) are resistant and normally survive.

How Oak Wilt Spreads

Oak wilt can be carried by insects from an infected red oak to fresh wounds on an uninfected oak, or, in the case oflive oaks, it may spread through interconnected root systems at over 100 feet per year.

Preventative Measures To Be Taken On All Oaks (CPS & Contractors)

Avoid pruning or wounding any oaks unless absolutely necessary.

If pruning is required, request assistance as soon as possible from the CPS Tree & ROW Maintenance Section or one of the Inspectors listed below.

Any pruning wounds or damage caused by equipment (trucks, diggers, trenchers, backhoes, etc.) must be painted immediately, within a minimum of thirty minutes. This includes any cracked or ripped limbs and wounds to trunks, limbs or root flares which may have been damaged by passing equipment. **The revised City of San Antonio Tree Preservation Ordinance has a requirement that all wounds to oak trees be painted within thirty minutes.**

Within a known infection center, all tools must be disinfected with a 10% Clorox and water solution or Lysol spray before using these tools on any other oak tree.

Requests for Assistance From the Tree & ROW Maintenance Section

When assistance is required, please provide as much notice as possible or call as soon as damage occurs. Contact names and numbers are listed below:

	Office	Radio#	Cellular
Section Office	353-3593	2400	
James F. Koenig	353-3798	2401	844-5457
Terri Minnia	353-5871	2405	394-3580
Margie Regalado	353-5218	2403	394-3579
Clyde Stroud	353-5870	2404	394-3578
John Gutierrez	353-5872	2402	275-6935
Sid Bonilla	353-5243	2407	287-9767

Municipalities With Oak Wilt Ordinances
(as **of October 2009**)

Alamo Heights (Ord. 1363)	Public Works Director 6116 Broadway 826-0516
Balcones Heights (Ord. 16-96)	City Administrator 3300 Hillcrest 735-9148 ext. 227
Castle Hills (Ord. 789)	City Manager 209 Lemmonwood Dr. 342-2341
Fair Oaks Ranch (Ord. 113.0)	City Supervisor 7286 Dietz-Elkhorn Road 698-0900
Garden Ridge (Ord. 71)	Director of Public Works 9537 Schoenthal 651-6632
Helotes (Ord. 120)	Building Development Permits 12951 Bandera Rd. 695-8877
Hill Country Village (Ord. 729)	City Administrator 116 Aspen Ln. 494-3671
Hollywood Park (Ord. 585)	City Secretary 2 Mecca Dr. 494-2023 ext 21
San Antonio Ord 97332 ArticleVIII 21-170	CoSA Arborist 114 W. Commerce St. 207-8053
Schertz	No oak wilt ordinance; but have tree preservation measures in their Unified Development Code
Selma	No oak wilt ordinance, but have a requirement to attain a permit from City Hall prior to any work being performed within their boundaries. Selma City Hall, 9375 Corporate Dr. 651-6661
Shavano Park (Ord. 600-137-04)	Director of Water Utility 900 Saddletree Court 493-3478
Terrell Hills (Ord. 953)	City Manager 5100 N. New Braunfels 824-7401

This Page is Intentionally Blank