APPENDICES

Appendix A: PageMart Component Part List
(Appendix A to PageMart's Reply Comments, ET Docket No. 92-100, filed 16, 1992)

Appendix B: PageMart Response to MPR Teltech
(Appendix A to PageMart's Response to Formal Opposition, ET Docket No. 92-100, PP-40, filed July 1, 1992)

Appendix C: Motorola, Inc. Letter to Pagemart Regarding PIMS Technical Feasibility
(Supplemental Material submitted July 16, 1992 in ET Docket No. 92-100)

Appendix D: Report of SFA, Inc., on PIMS Feasibility
(October 5, 1992)

Appendix E: American Cryptronics, Inc. Letter to PageMart Regarding Protoptype of PCMCIA-Standard Receiver Card
(October 5, 1992)

A

APPENDIX A

The following charts represent the initial system components design based on either commercially available products or modifications of commercial product designs to meet specific system-wide PIMS requirements. PageMart is in the process of determining system software specifications and when complete will identify the most cost-effective computer platform to run on as the system controller and interface to the paging terminal which in turn connects to the PSTN.

The following sections contain a "part list" for the major system components below:

- **Geographic Cell**
- **Building Cell**
- **Office Cell**
- **Subscriber Transceiver Module**

Geographic Cell

General Description

Geographic cells will: transmit on one Polling and eight Data channels; receive on Satellite Channel, Return Link Channel and the eight Data channels. PSTN link for back-up channel of sat link, plus primary link between this cell and system controller for data and C^2 delivery and return.

Operation

Polling channel data is received by satellite channel (PSTN back-up) then processed, re-clocked, POCSAG formatted and transmitted. The Polling channel continuously transmits a POCSAG formatted signal. The Return Link signal is received, processed and sends the response and EOT signals back to the system controller with ARQ to the GC control module for data delivery management. Messages to be transmitted are time and frequency tagged at the system controller and are held in memory at the GC control until transmission time. The GC control module formats data, sets exciter frequency and time controls the data to be transmitted. The exciter modulates the carrier to drive the PAs. The PA outputs are combined and sent to the Tx antennas. An active combiner filters out the Tx signals at the Rx input.

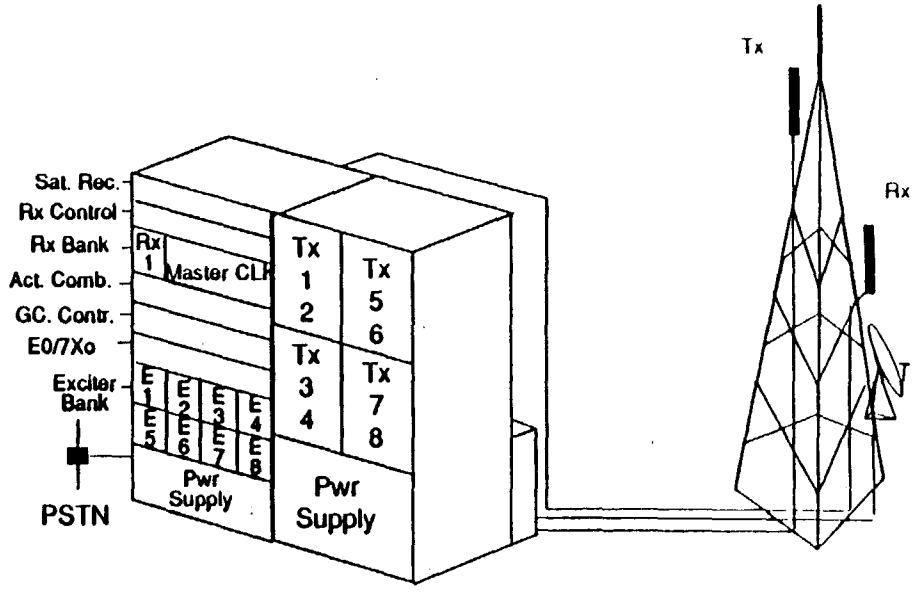

Technical Specifications

Input	• PSTN (V.32 or similar) • KU band sat. • Return link channels (-100dbm)
Output	• PSTN (V.32 or similar) • Forward link channels (1KW ERP/channel)

DaroMart

Geographic Cell Transmitter Bay

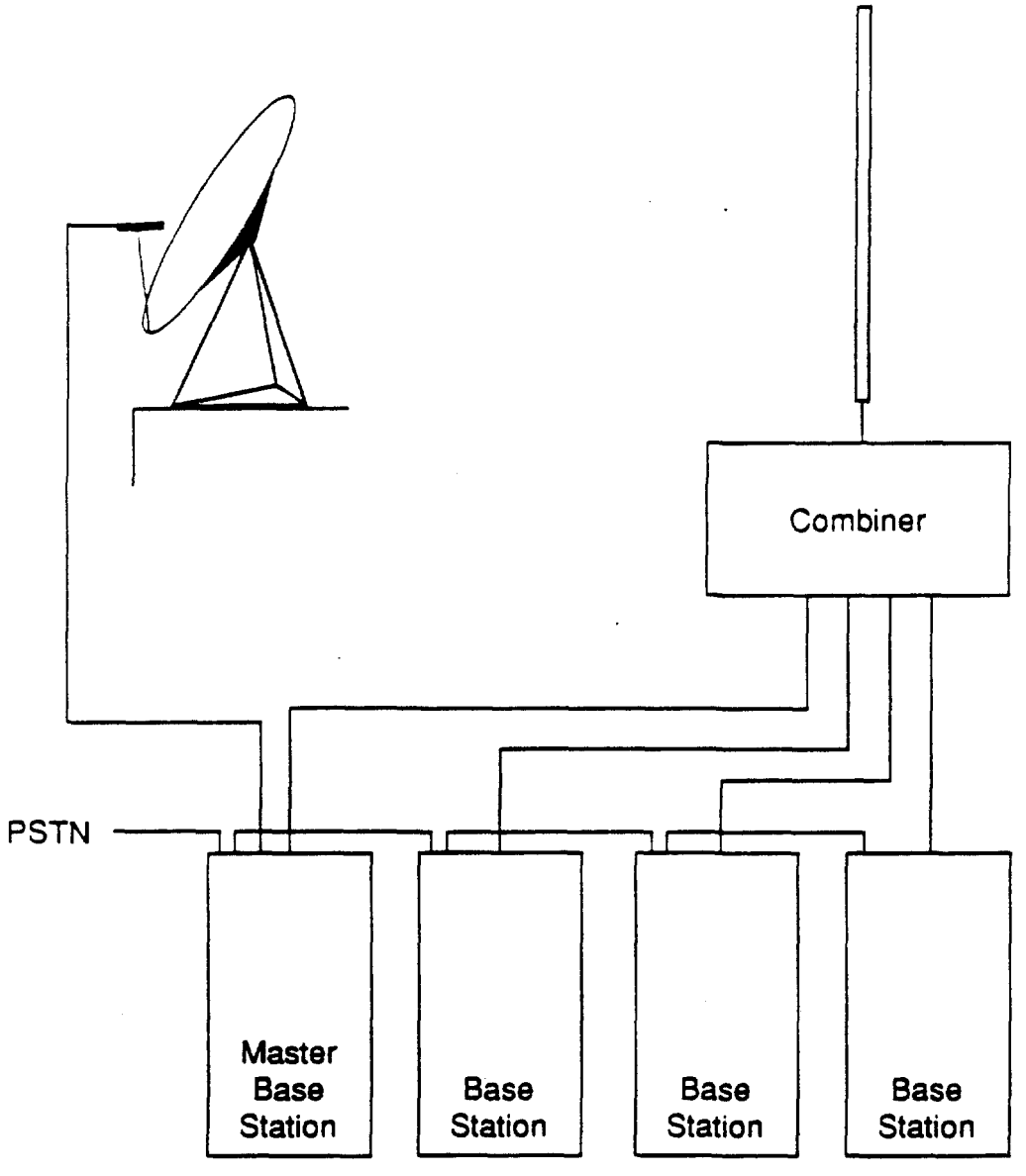

Geographic Cell
Transmitter Master Base Station

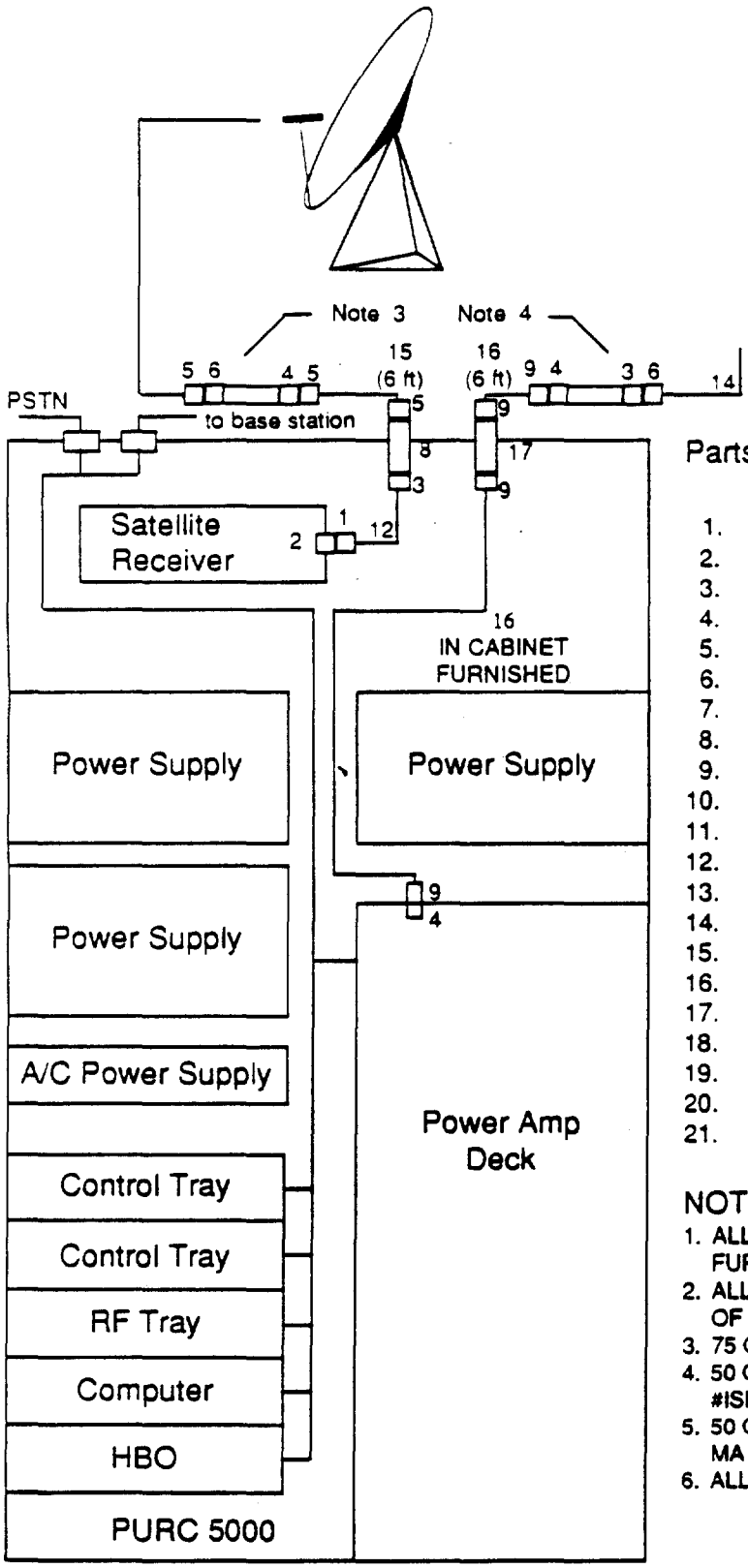

Parts List:

1. F Male
2. F Female
3. N Male
4. N Female
5. N Male 44ASN-70 / L44V-70 Heliax
6. N Female 44ASN-70 / L44N-70 Heliax
7. N Male L44V
8. N Female L45N
9. N Male 44 ASV
10. N Female L44N
11. N Male L44V
12. 75 OHS
13. 1/2" Heliax LDF4-50A
14. 7/8" Heliax LDF5-50A
15. 1/2" Superflex FSJ4-75A / LDF4-75A Heliax
16. 1/2" Superflex FSJ4-50A
17. 50 OHM N/F - N/F Feed Thru
18. 75 OHM N/F - N/F Feed Thru
19. RG142 (6 ft.)
20. BNC Male
21. BNC Female

NOTES:

1. ALL RF FEED THRU'S AND IN-CABINET RF ABILITY ARE FURNISHED WITH STATION
2. ALL RF FEED THRU'S EXIT EITHER THE TOP OR THE SIDE OF THE CABINET DEPENDING ON SITE REQUIREMENTS
3. 75 OHM LIGHTNING ARRESTOR - POLY PHASER #090-0104-A
4. 50 OHM LIGHTNING ARRESTOR - POLY PHASER #ISPT501HN-MA
5. 50 OHM LIGHTNING ARRESTOR - POLY PHASER "ISS0NX-CI-MA
6. ALL RF FEED THRU'S ARE LABELED WITH FREQUENCY

Geographic Cell
Transmitter Base Station

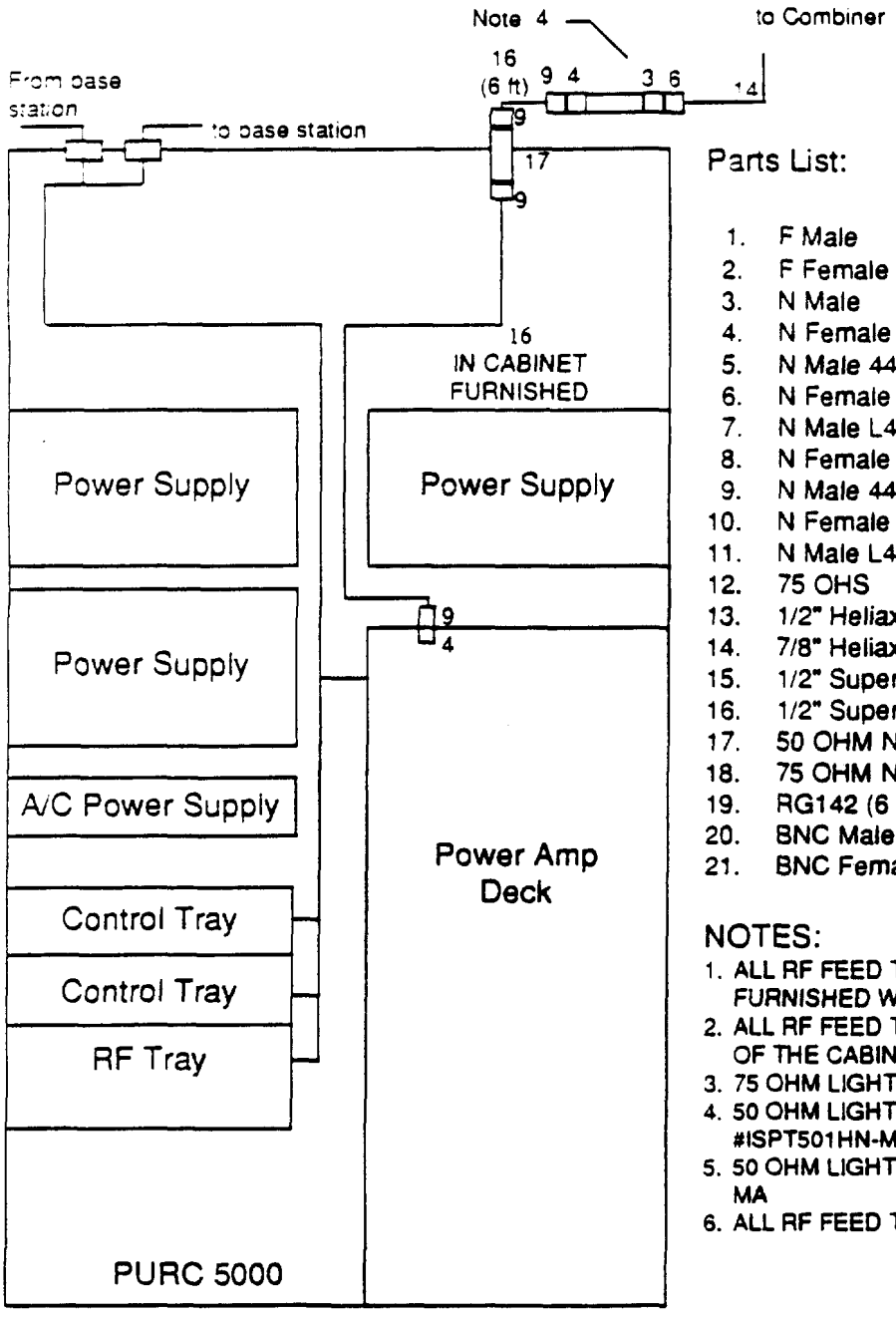

Parts List:

1. F Male
2. F Female
3. N Male
4. N Female
5. N Male 44ASN-70 / L44V-70 Heliax
6. N Female 44ASN-70 / L44N-70 Heliax
7. N Male L44V
8. N Female L45N
9. N Male 44 ASV
10. N Female L44N
11. N Male L44V
12. 75 OHS
13. 1/2" Heliax LDF4-50A
14. 7/8" Heliax LDF5-50A
15. 1/2" Superflex FSJ4-75A / LDF4-75A Heliax
16. 1/2" Superflex FSJ4-50A
17. 50 OHM N/F - N/F Feed Thru
18. 75 OHM N/F - N/F Feed Thru
19. RG142 (6 ft.)
20. BNC Male
21. BNC Female

NOTES:

1. ALL RF FEED THRU'S AND IN-CABINET RF ABILITY ARE FURNISHED WITH STATION
2. ALL RF FEED THRU'S EXIT EITHER THE TOP OR THE SIDE OF THE CABINET DEPENDING ON SITE REQUIREMENTS
3. 75 OHM LIGHTNING ARRESTOR - POLY PHASER #090-0104-A
4. 50 OHM LIGHTNING ARRESTOR - POLY PHASER #ISPT501HN-MA
5. 50 OHM LIGHTNING ARRESTOR - POLY PHASER "ISS0NX-CI-MA
6. ALL RF FEED THRU'S ARE LABELED WITH FREQUENCY

Geographic Cell
Receiver Bay

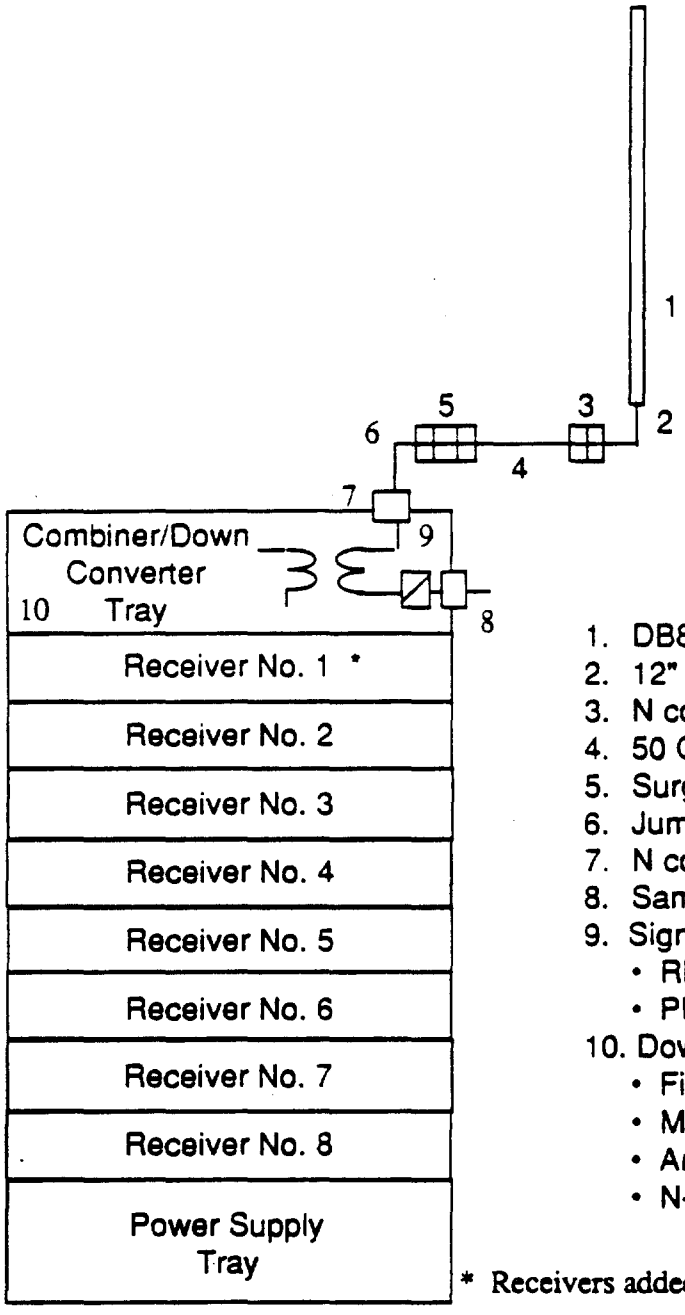

1. DB809
2. 12" jumper cable
3. N connector pair
4. 50 OHMS 1/2 helix
5. Surge suppressor
6. Jumper cable
7. N connector feed through
8. Sampling cabling
9. Signal enhancement circuit
   - RF Combiner Loral 4426-Z
   - Phase/
10. Down Converter
    - Fitter RxTx 11-88-01
    - Mixer WJ M9E
    - Amp Motorola PAM-1-5-29-2
    - N-Way Loral Mo-100

* Receivers added as required

Building Cell (BC)

Functional

The building cell (BC) will vary in configuration due to requirements and constraints. It will also function different than the OC. A fully assigned BC will have a satellite and PSTN linking for entry into and exit from that building cell. The fully configured BC will transmit the Polling channel and have eight (8) Data channels plus the Returnk Link receiver channel. Now, for the non-fully configured BC examples: If the polling channel is present throughout the building from a geographic cell, then the building cell polling channel can be excluded. In buildings where the sallite dish cannot be installed and/or PSTN-only data delivery is more cost-effective - no satellite dish receiver-based input is installed. In this case, time can be acquired via GPS, NBS, and OMEGA-like radio receiver sources or local 24HR broadcast stations including FM and TV, or the no receiver case where time is acquired over the phone line, such as the NBS system approach.

Operational

The satellite link provides timing plus Polling channel signals and forward link data. The demodulated sat data is processed, stored and the timing signals synchronize the formatter. The Polling channel data is formatted and transmitted. Return Link location response signals are processed and sent to the system controller over PSTN, and ACK signals are processed for continued transmission of data to that unit and sending re-transmission requests and transmission completion (EOT) to system controller. When time to transmit occurs for a channel, that file is pulled and transmitted per instructions. Data channel transmission will stop if an ACK/NAK is not received after packets have been transmitted and notify the system controller. When an ACK is received, transmission will continue until EOT is detected. The EOT is sent back to the system controller.

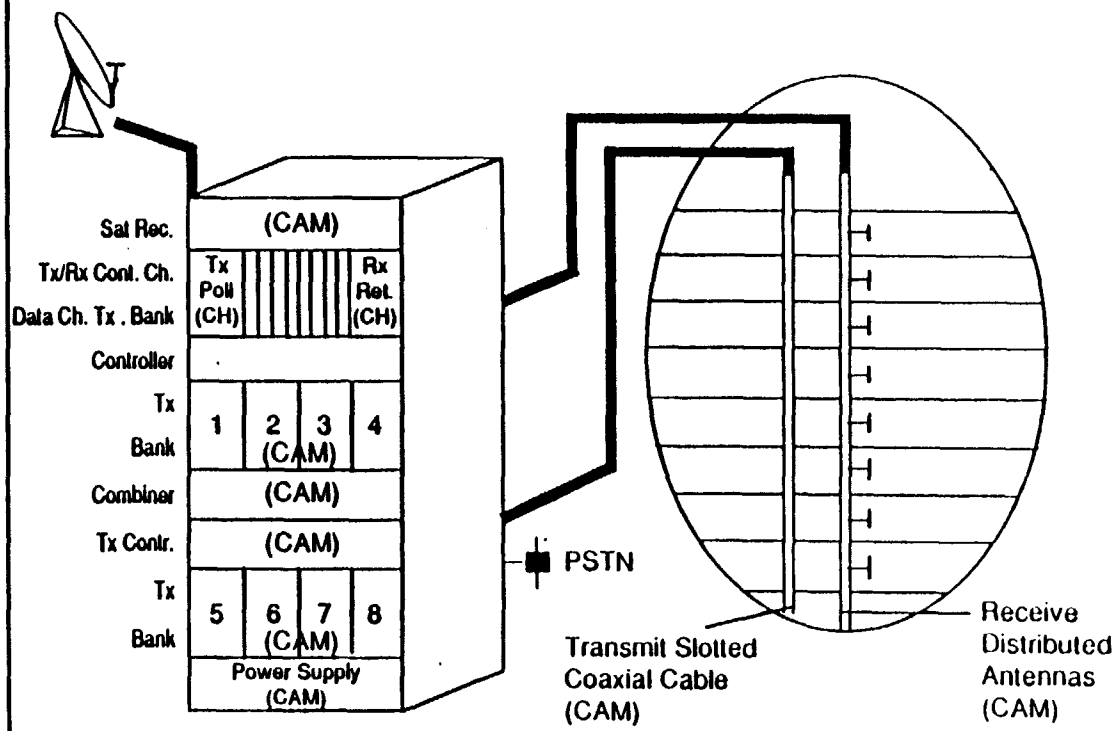

Technical Specifications

Input:
- KU Band Sat. Rec: alt [GPS, TDRS, OMEGA, TV, FM]
- PSTN (V.32 or similar modem
- 930 MHz Return Link (-100 dbm)

Output:
- PSTN (V.32 or similar)
- 930 MHz Forward Link (10W)

Size: Rackable Configuration

PageMart

Building Cell

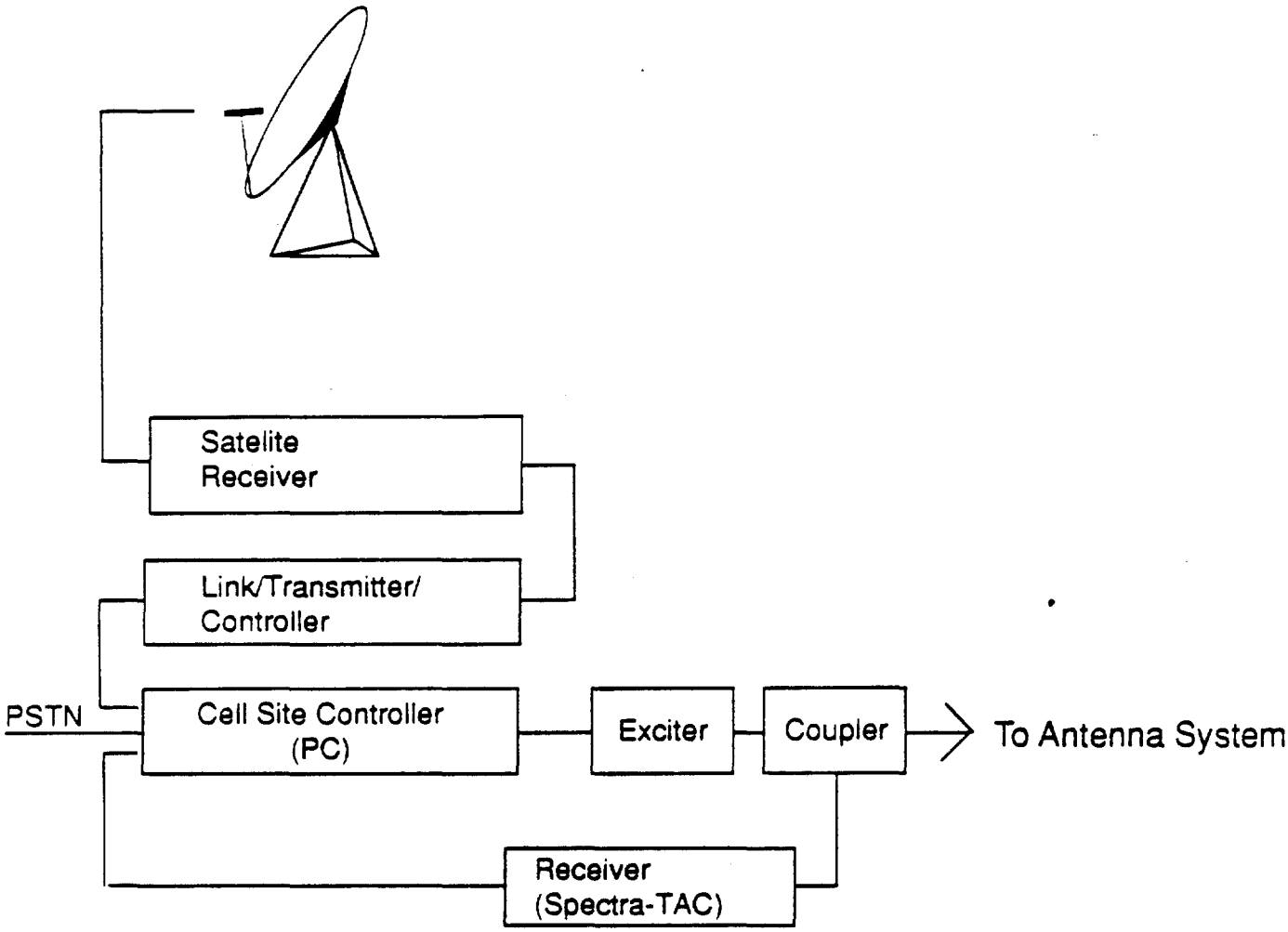

Description	Manu.	Part #
Coupler	LORAL	4426 - 1
Exciter	Motorola	TRN9270A (Freq. Synth) TUF1580DA (RF Tray) TLF 1363A (IPA)
Receiver	Motorola	Spectr TAC
PC	INTEL	
Link/Tx Contr.	Complex	NIU
Sat. Rec.	Space Com.	M2000A
Sat. Ant.	Channel Master	1.0 M KU-Band
LNB	NORSAT	6300

MicroFill™

Structure Specific Coverage

Decibel
Multi
Media
Microcell
Systems

WHERE COMMUNICATION TECHNOLOGIES MEET

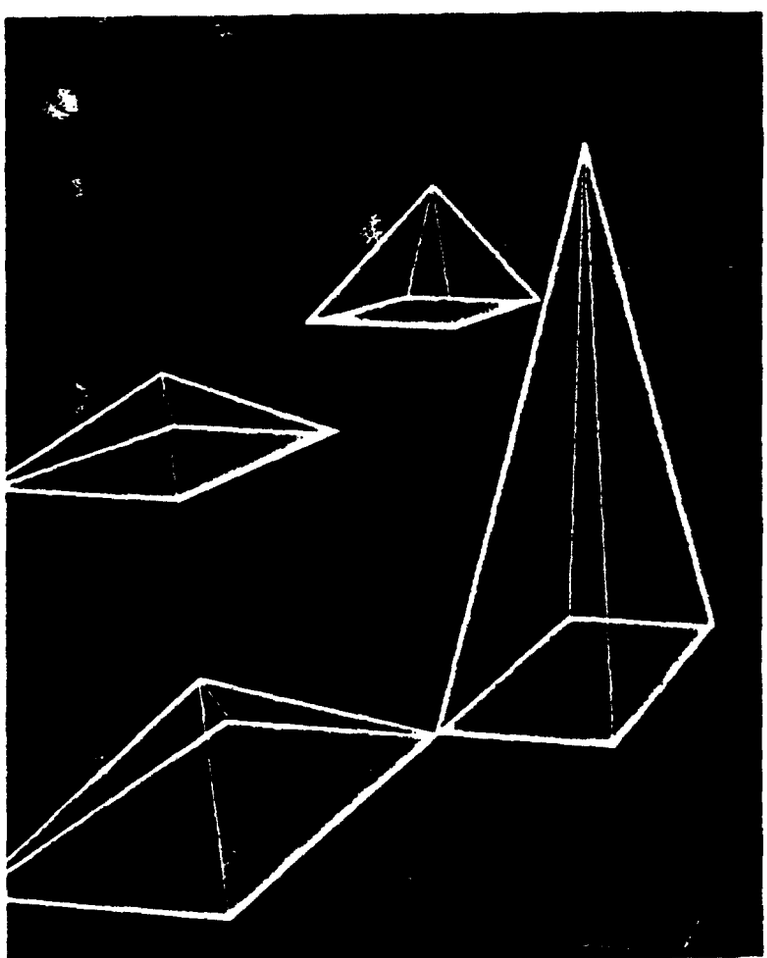

Improve In-Building Coverage And Add Cellular Subscribers.

Anyone who uses hand-held cellular phones understands the frustration of dropped calls and poor or scratchy voice quality. Equally annoying is the inability to make calls inside buildings, subway stations, pedestrian tunnels and other covered structures—particularly when these are often the very places from which calls need to be made.

Fortunately, there's a solution: MicroFill from Decibel Products, an RF distribution system specifically designed to provide basic service or microcellular coverage inside buildings, tunnels and other such structures.

Provide Clean, Clear Signals With Reduced Interference.

Currently, cellular coverage inside buildings and other structures is provided by radiating a signal from a nearby cell site that is strong enough to penetrate exterior walls and saturate the interior. Unfortunately, this power approach to in-building coverage often causes interference to other calls in the network. Such interference occurs because direct and reflected RF signals from the high-power site reduce the signal-to-interference ratio in cells which use the same frequencies. As a result, system capacity is limited and call quality lowered.

MicroFill, on the other hand, is designed to counter co-channel interference, thereby allowing system operators to provide the higher quality of service today's cellular customers demand. MicroFill uses state-of-the-art amplifiers, 75 ohm coaxial cable and specially designed antennas to distribute precisely controlled RF signals throughout the desired area. The result is clear, clean communications with little or no interference to co-channel cells.

Cost Savings As Much As 75% With No Performance Loss.

The MicroFill system uses a 75 ohm coaxial cable distribution system. In many buildings, 75 ohm cables have been pre-installed for use with CATV and LANs. With 75 ohm cable, a cost savings of up to 75 percent over current 50 ohm cables of equal electrical specifications is possible. Since the amplifiers and the antennas are designed for 75 ohm impedance, no electrical performance is sacrificed.

By utilizing a distributed gain/radiation system, only the required amount of signal is radiated at various locations inside a structure to provide coverage. Buildings with no coverage can be provided with cellular service easily and cost effectively. Buildings already served by high-powered sites can continue to be served while power and interference are reduced.

In high-use environments, such as downtown office buildings, network capacity can be increased by "off loading" in-building users to a MicroFill system served by a dedicated cell. In conjunction with

Decibel's MicroLite™ Fiber Optic Microcell System, the dedicated cell can serve several buildings.

MicroFill Handles TDMA, CDMA And Narrow Band As Well As Analog.

The MicroFill system is designed to be transparent to the cell site. This ensures that the investment in Decibel equipment will continue to perform even if you change MTSO or base station suppliers. High linearity throughout the system ensures compatibility with TDMA, CDMA and N-AMPS as well as analog systems. This linear design supports both today's analog systems and tomorrow's digital modulation scheme.

MicroFill Installs Easily and Economically At Many Convenient Locations.

MicroFill's 75 ohm cables are designed for in-building distribution and are therefore easy to install. DC power is supplied to the in-line amplifiers through the coaxial cable. This further reduces the cost of installation, since in most cases an electrician is not required. The power source supplying the amplifiers is placed in an equipment closet and plugged into a standard electrical outlet. Uplink and downlink directional couplers provide easy setup and maintenance, as well as monitoring points in the system.

Omni and directional antennas are available to equalize coverage and signal strength. The antenna radomes are designed to be as inconspicuous as possible, looking no more objectionable than a smoke detector.

MicroFill is a member of Decibel Products' Multi Media Microcell Systems family. It is designed to work with other products including MicroLite, a fiber optic microcell system, the 16-Channel DB4416 Power Combiner, PrismPlus repeaters and a selection of specialized low-profile interior and exterior antennas. Together, these products provide cellular system engineers with the tools to meet the challenges of today's subscribers while building the foundation for future personal communications networks.

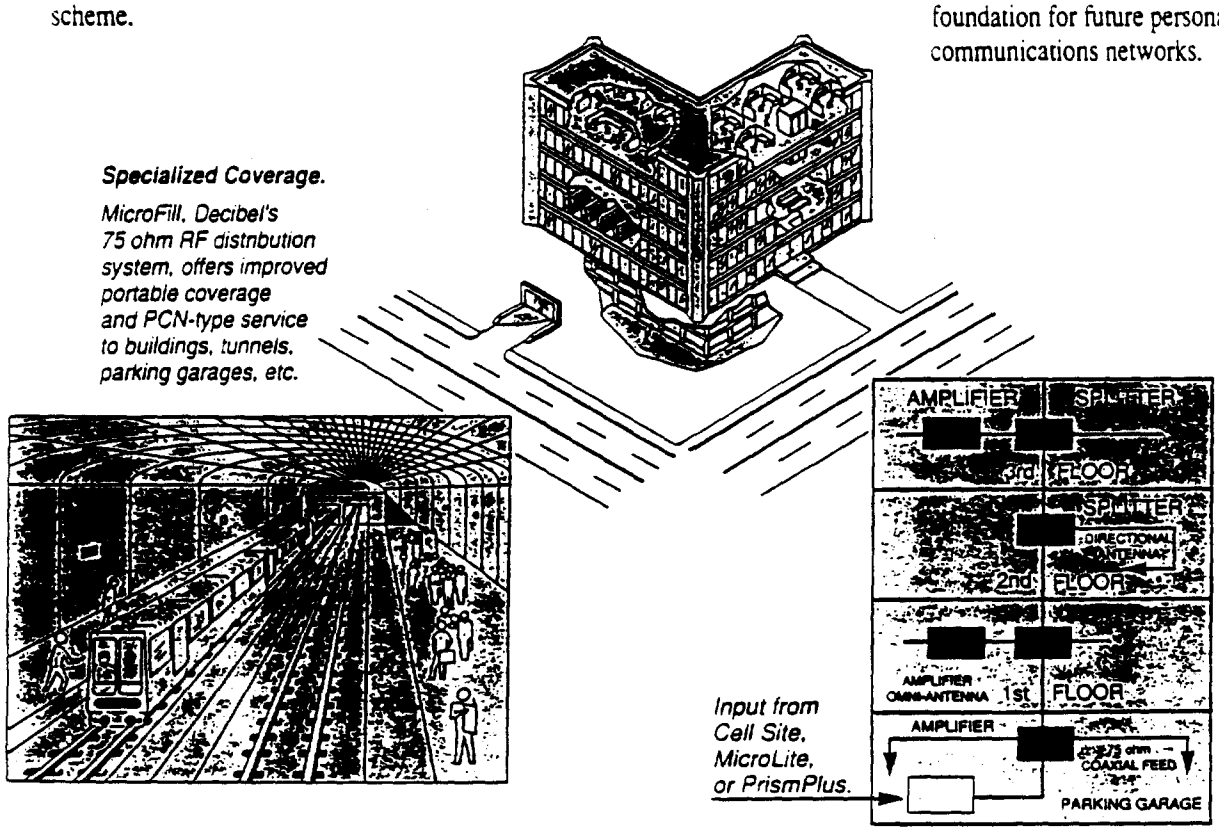

Specialized Coverage.

MicroFill, Decibel's 75 ohm RF distribution system, offers improved portable coverage and PCN-type service to buildings, tunnels, parking garages, etc.

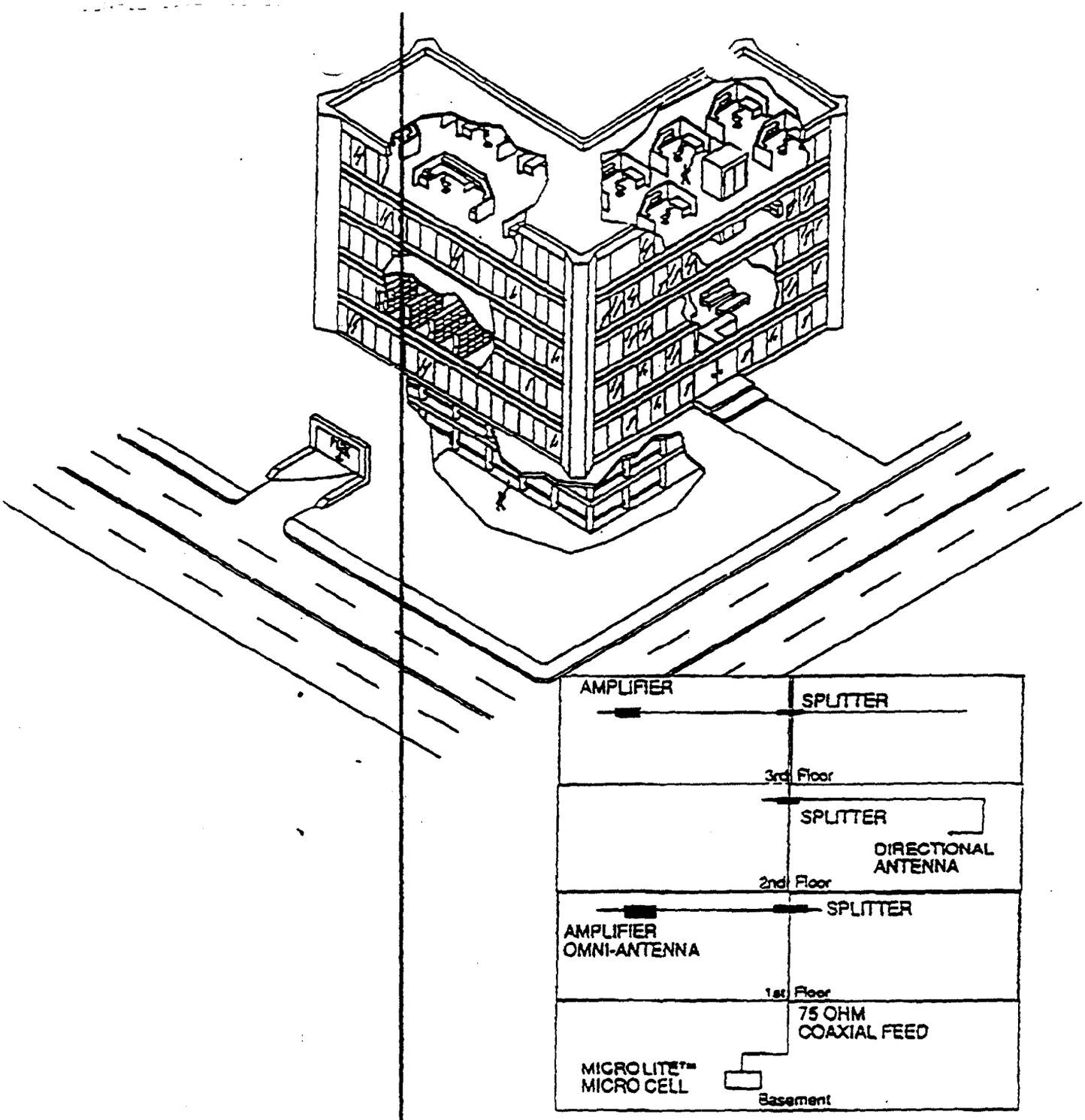

Micro Lite™ Fiber Optic Microcells combined with Decibel's 75 ohm RF distribution system offer improved portable coverage and PCN type service to buildings, tunnels, parking garages, etc.

DECIBEL PRODUCTS

Micro Fill Indoor Antenna

DB781S50N-C, DB781S75F-C

Model Number	DB781S50N-C	DB781S75F-C
Impedance	50 ohms	75 ohms
Termination	Type N-Female	Type F-Female
Frequency Range	824-894 MHz	
Gain	1.0 dBd or 3.1 dBi	
VSWR	≤1.5:1	
Pattern Characteristic	"Butterfly" pattern with freespace null directly below antenna	
Polarization	Perpendicular to C-C plane	
Max. Input Power	50 Watts	
Other Information	Application: Indoor Tx/Rx	
Weight	1.7 lbs	
Material	Back Panel: Brass Radiating Elements: Brass Radome: ABS Plastic	
Color	Off-White	
Mounting	Four mounting holes in backplate.	
Packing Size	12" x 12" x 12"	
Shipping Weight	2.7 lbs	

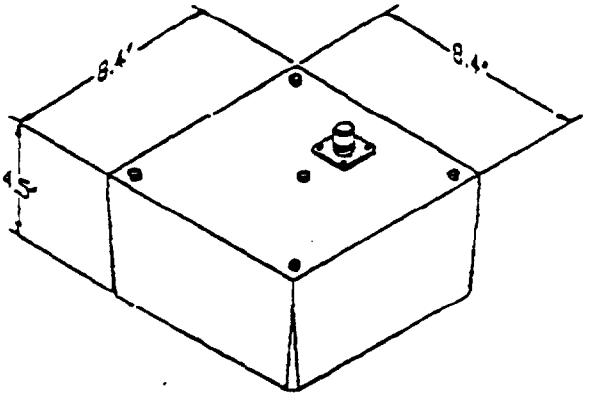

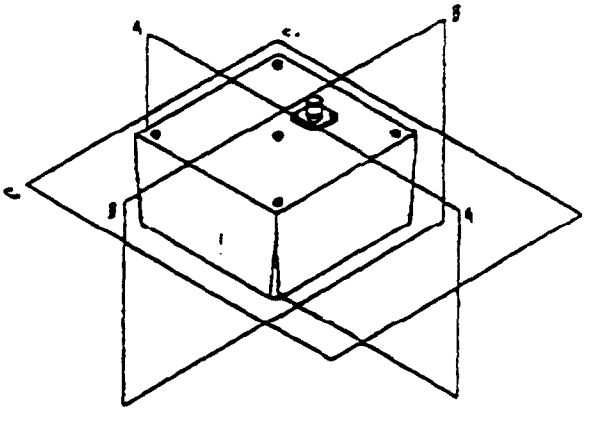

Plane A-A

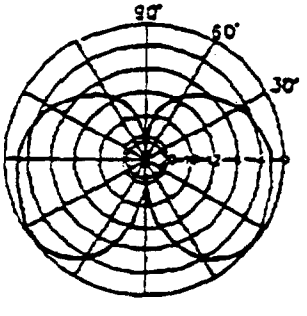

Plane B-B

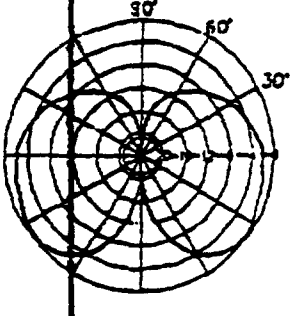

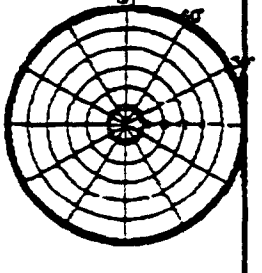

Plane C-C

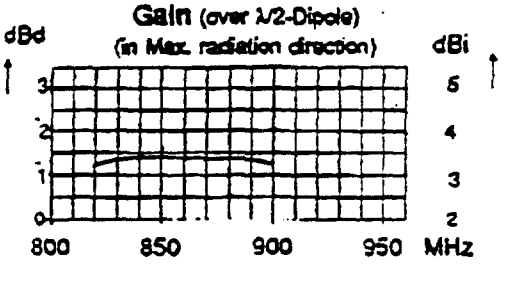

DECIBEL PRODUCTS

Micro Fill Indoor Antenna

DB781D50N-C, DB781D75F-C

Model Number	DB781D50N-C	DB781D75F-C
Impedance	50 ohms	75 ohms
Termination	Type N-Female	Type F-Female
Frequency Range	824-894 MHz	
Gain	> 4.0 dBd or >6.1 dBi Max in A-A and C-C plane	
VSWR	<1.5:1	
Beamwidth (3 dB from max)	225° N.A. N.A.	A-A plane B-B plane C-C plane
Polarization	Perpendicular to C-C plane	
Max. Input Power	50 Watts	
Other Information	Application: Indoor Tx/Rx	
Weight	2.2 lbs	
Material	Back Panel: Radiating Elements: Radome:	Brass Brass ABS Plastic
Color	Off-White	
Mounting	Four mounting holes in backplate.	
Packing Size	12" x 12" x 12"	
Shipping Weight	3.2 lbs	

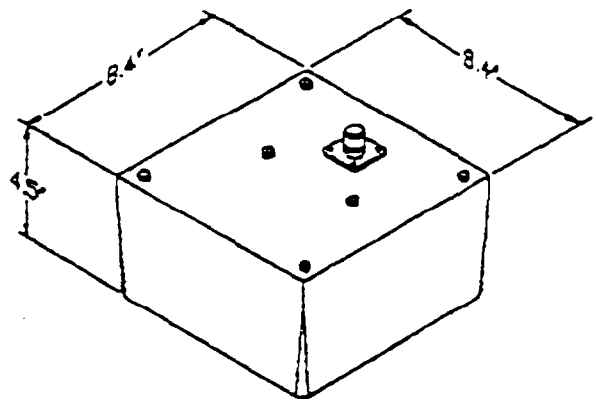

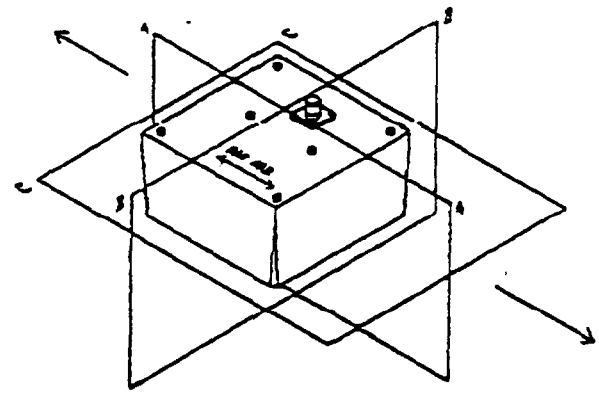

Plane A-A

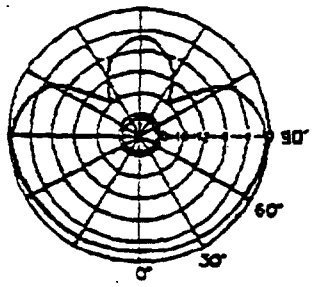

Plane B-B

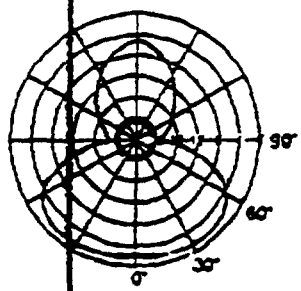

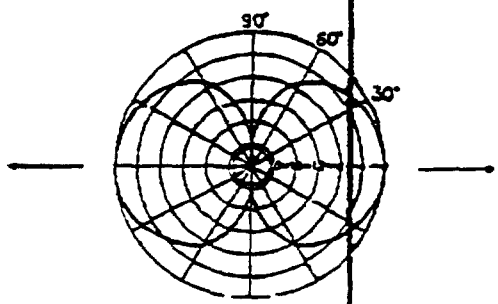

Plane C-C

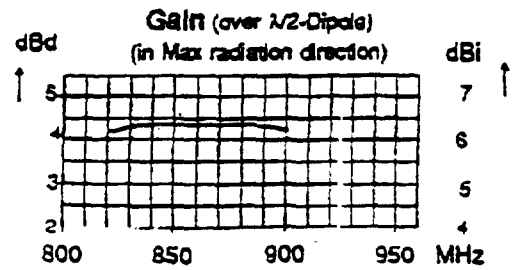

DECIBEL PRODUCTS

Micro Fill Indoor Antenna

DB781LP50N-C, DB781LP50F-C

Model Number	DB781LP50N-C	DB781LP50F-C
Impedance	50 ohms	75 ohms
Termination	Type N-Female	Type F-Female
Frequency Range	824-894 MHz	
Gain	> 6.5 dBd or >8.6 dBi	
VSWR	<1.5:1	
Beamwidth (3 dB from max)	70° 90° 65°	A-A plane B-B plane C-C plane
Polarization	Perpendicular to C-C plane	
Max. Input Power	50 Watts	
Other Information	Application: Indoor Tx/Rx >10 dB F/B ratio	
Weight	1.7 lbs	
Material	Back Panel: Radiating Elements: Radome:	Brass Brass ABS Plastic
Color	Off-White	
Mounting	Four mounting holes in backplate.	
Packing Size	12" x 12" x 12"	
Shipping Weight	2.7 lbs	

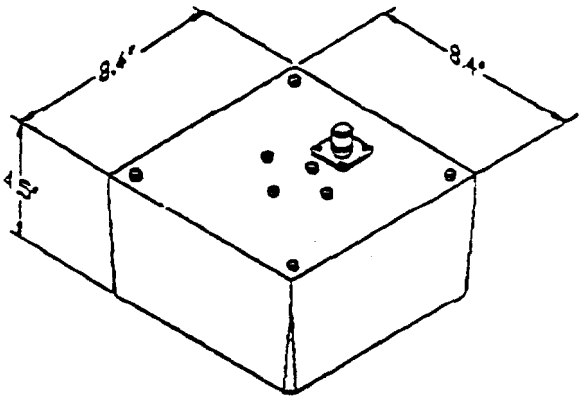

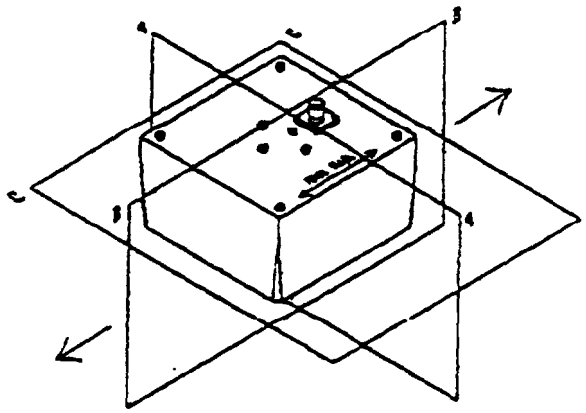

Plane B-B

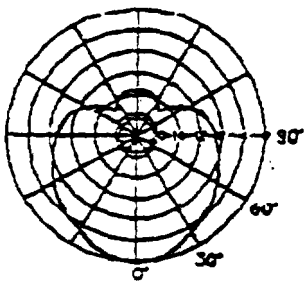

Plane A-A

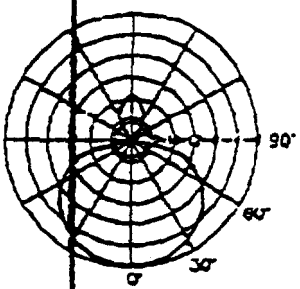

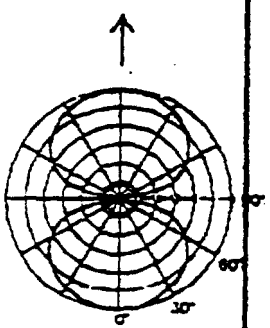

Plane C-C

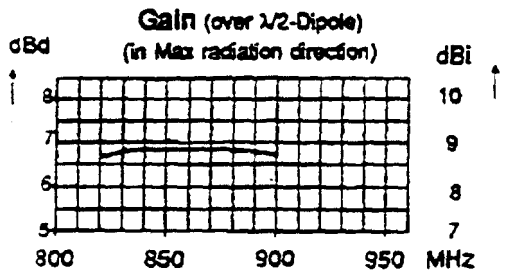

DECIBEL PRODUCTS

Micro Fill Indoor Antenna

DB791S50N-C, DB791S75F-C

Model Number	DB791S50N-C	DB791F75F-C
Impedance	50 ohms	75 ohms
Termination	Type N-Female	Type F-Female
Frequency Range	824-894 MHz	
Gain	>6.0 dBd or >8.1 dBi	
VSWR	<1.5:1	
Beamwidth (3 dB from max)	80° 120° 105°	A-A Plane B-B Plane C-C Plane
Polarization	Perpendicular to C-C plane	
Max. Input Power	50 Watts	
Other Information	Application: Indoor Corner Tx/Rx with >10 dB Front to Back Ratio	
Weight	1.4 lbs	
Material	Back Panel: Radiating Elements: Radome:	Brass Brass ABS Plastic
Color	Off-White	
Mounting	Four mounting holes in backplate.	
Packing Size	12" x 12" x 12"	
Shipping Weight	2.4 lbs	

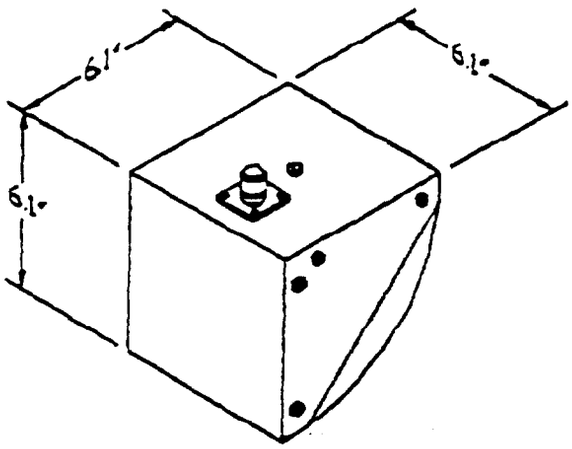

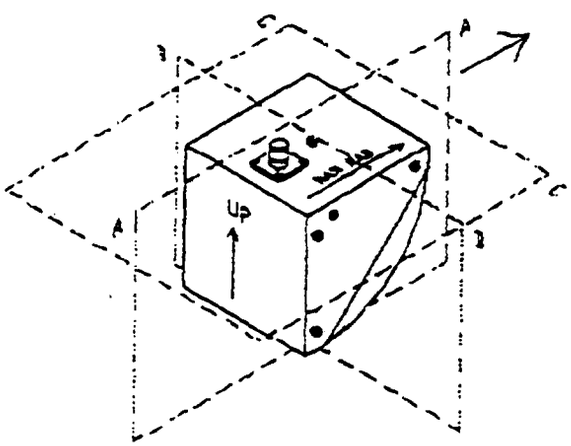

Plane A-A

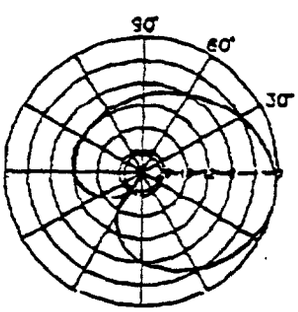

Plane B-B

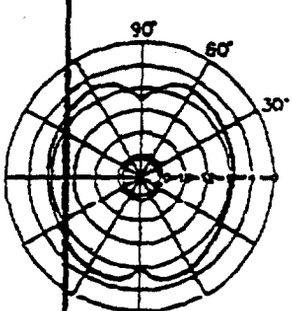

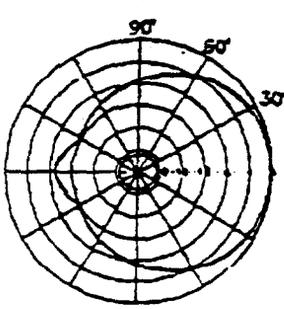

Plane C-C

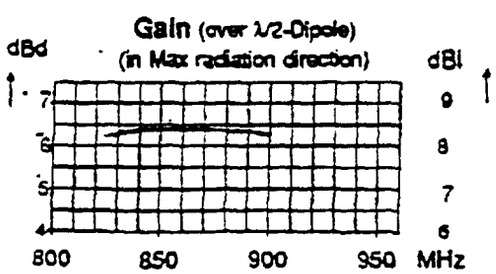

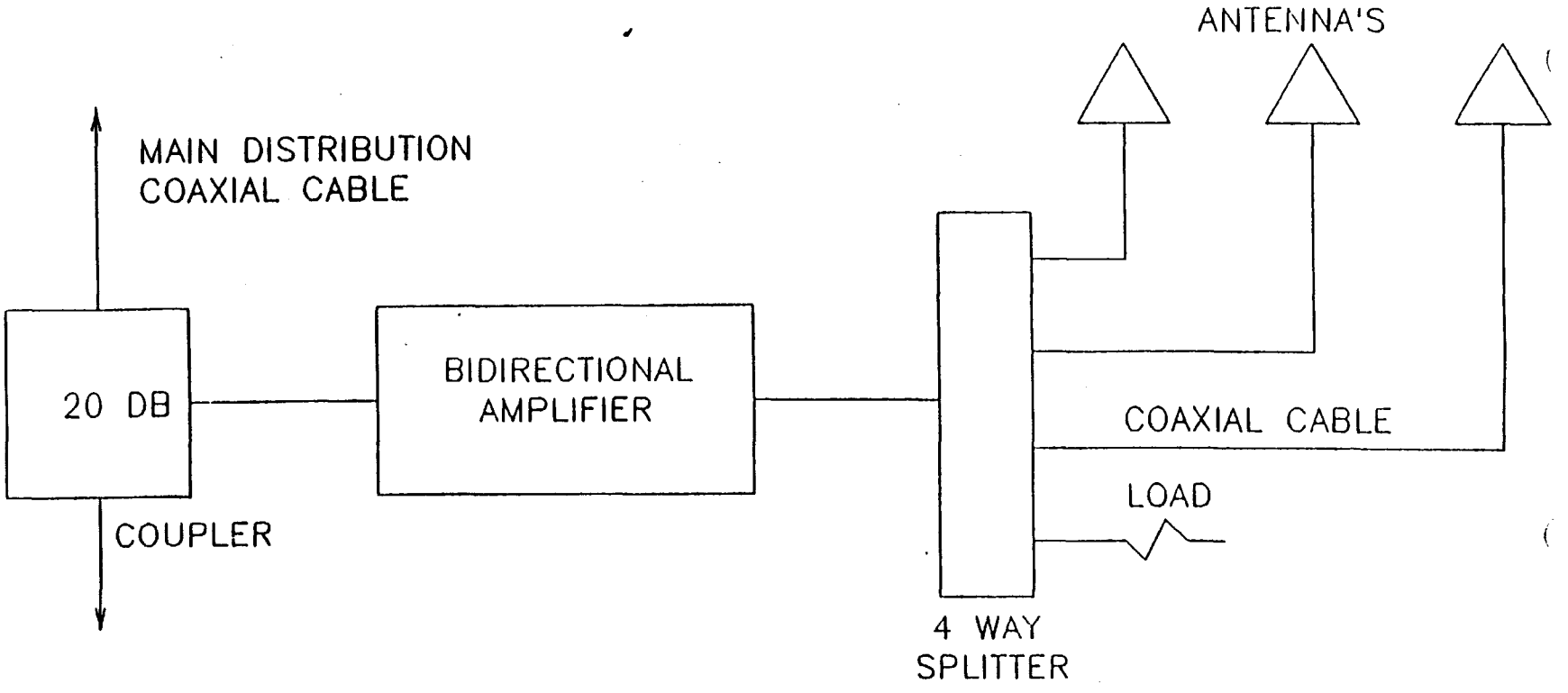

DECIBEL
PRODUCTS

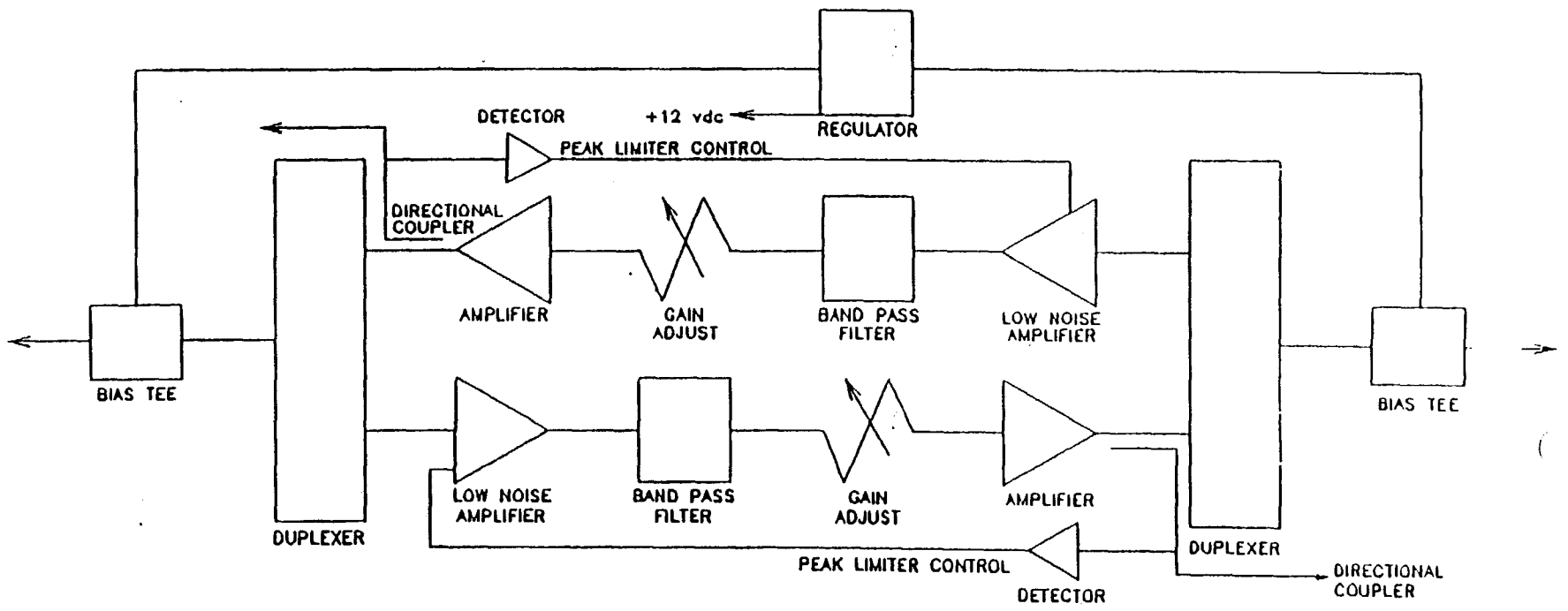

BUILDING DISTRIBUTION SYSTEM

BIDIRECTIONAL AMPLIFIER SYSTEM W/DC BIAS

9/02/91

DECIBEL PRODUCTS

Distributed Antenna System

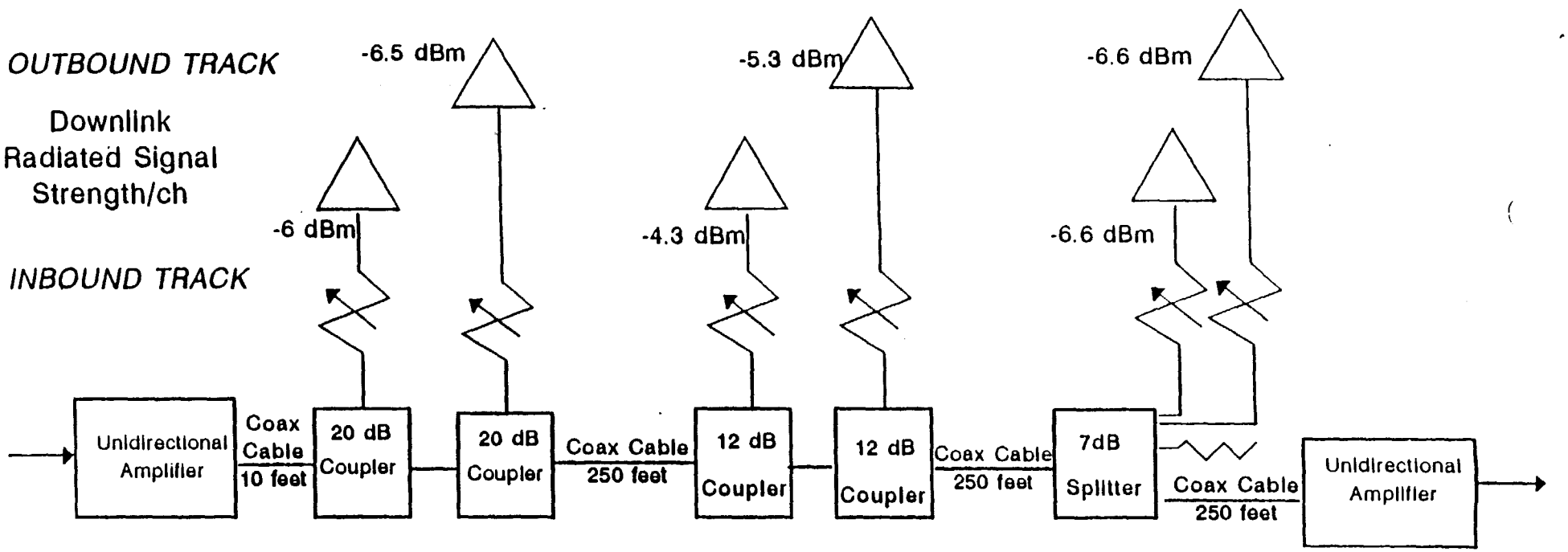

Gain/Loss

NOTES:

1. Assumes 1 watt composite power downlink amplifier.
2. 1/2" plenum rated 75 ohm coaxial cable.
3. Maximum number of channels equal 20.
4. Output of each downlink amplifier of +15 dBm/ch
5. Unity gain antennas are used.

DECIBEL PRODUCTS

Office Cell

Operating Sequence

1) Receive timing, plus command and control form Polling channel
2) Receive Return Link data from in office STUs (Subscriber Transceiver Unit)
3) Send return link data to system controller over PSTN but change Polling link ID to this office cell ID
4) Receive data over PSTN for transmission on Data channel
5) Transmit data to in-office STUs
6) Receive data from in-office STUs over Data channel

Description of Operational Sequence

The Rec module demodulates the Polling, Data and Return Link channels. The Processor Manager extracts timing plus command and control from the Polling channel, IDs, instructions and ARQ from the Return Link. Office cell sends this office ID plus user ID over the phone line to the system controller. Then, data to be transmitted with transmission instructions are received over the phone line and held in memory until transmission time. Then the computer pulls that file and transmits that file at that assigned time and ARQ procedures. The pager case size Rec. module is linked to the cabinet using phone extension cables with RJ11 jacks on both ends.

Modified PC Mini Tower

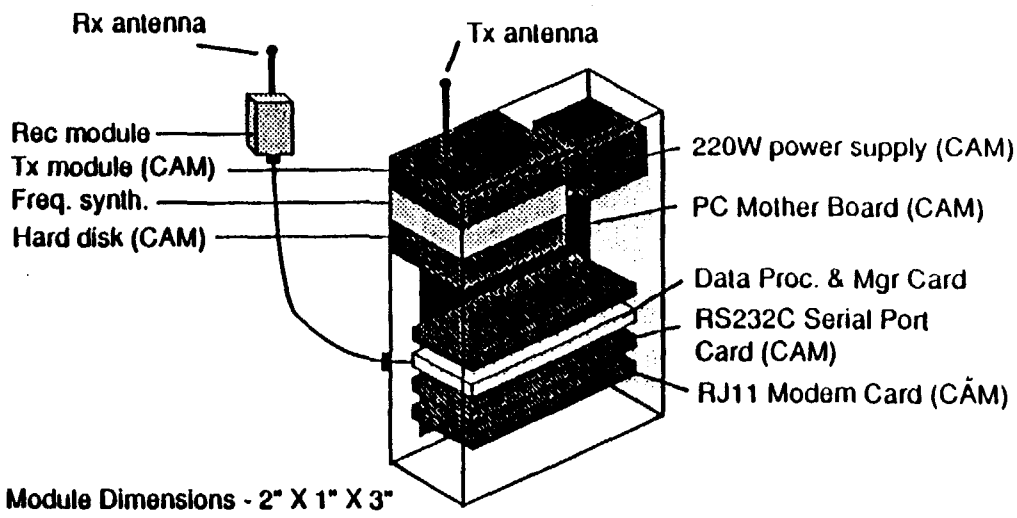

Rec. Module Dimensions - 2" X 1" X 3"
Cabinet Dimensions - 13" X 8" X 16"
(CAM) - Commercial Available Module

Technical Specifications

Rx Channels	3+	Selectable 8 Fixed 2channels
Bandwidth	25 kHz	Channel bandwidth
Frequency	930.0125 MHz + n25 kHz	Channel center frequency
	n = {0,1,2...9}	n = channel number
RF Power	10w ERP	Effective Radiated Power
Receive Specs	2,400 bps	Match POCSAG 1200
Rec. Module	2" X 1" X 3" (pager case)	RF board of pager
Tx Module	10 watts, one channel	Pager transmitter

DataMart

Receiver Module
(Functional Block Diagram)

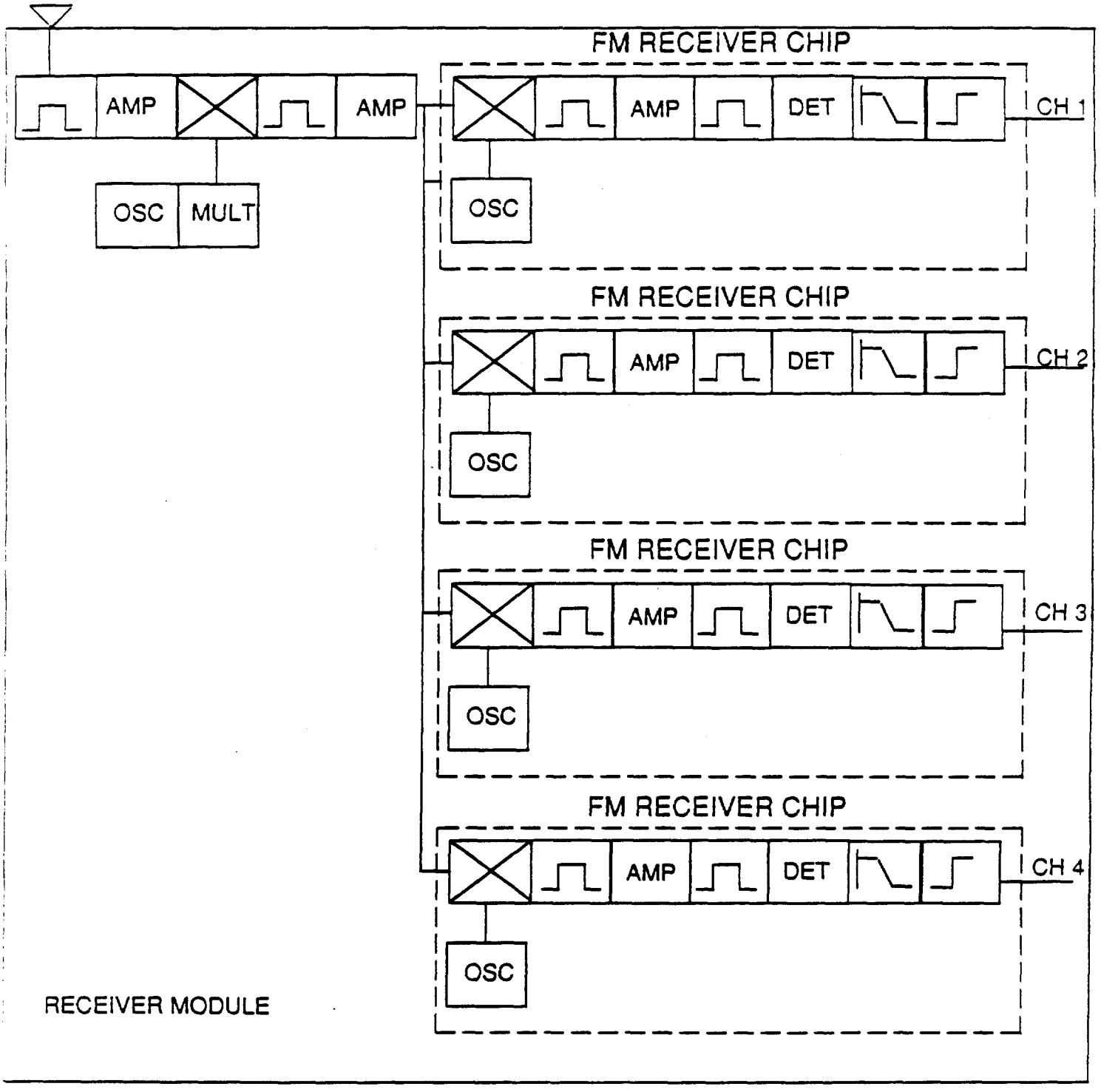

Data Processor and Manager Card

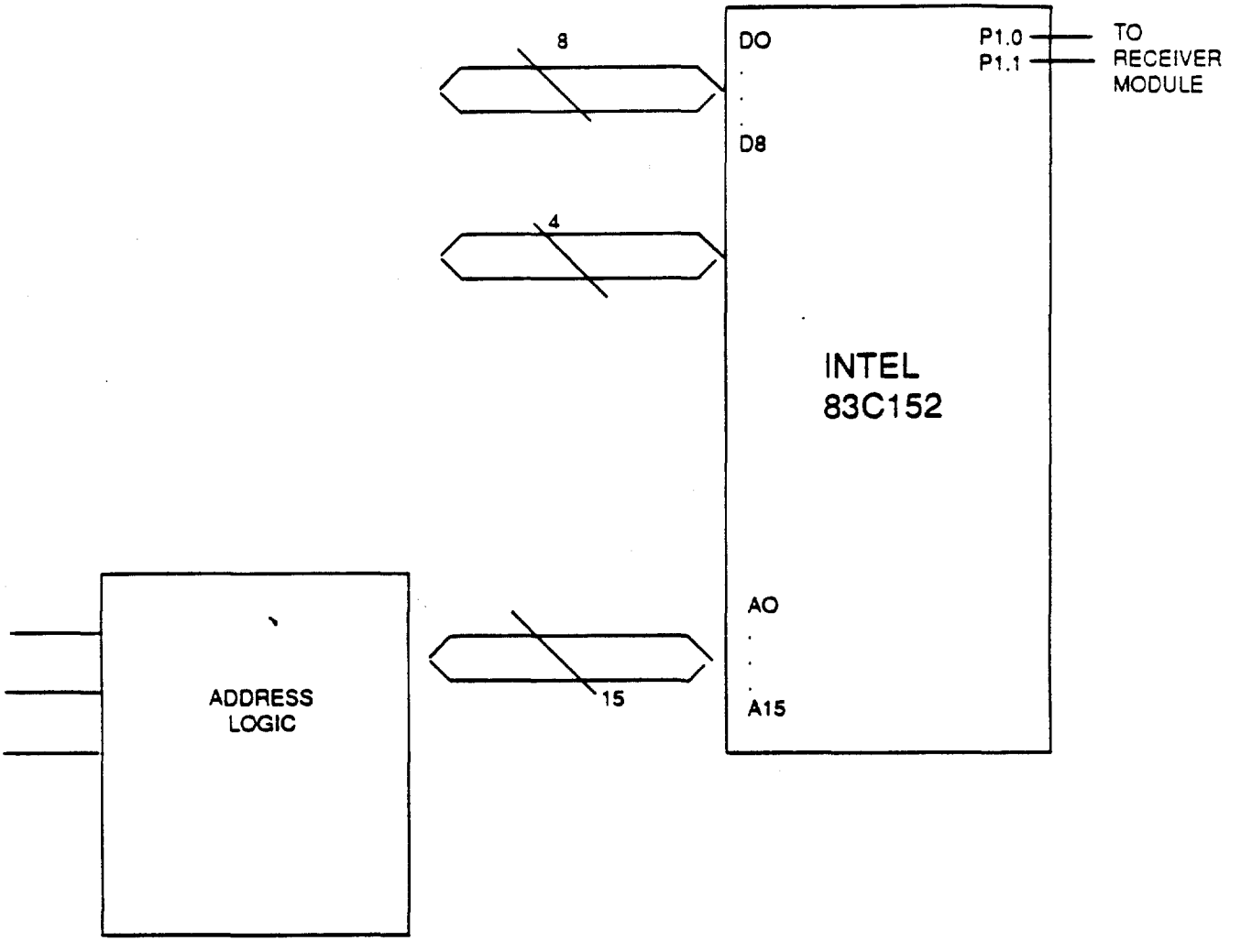

Personal Transceiver Subsystem

(Subscriber Transceiver Unit + Power Module + End User Product)

Operating Functions

- STU receives Polling and Data channel signals
- STU transmits Return Link channel plus Data channel signals
- Power Module unit boosts RF modem output to 10 watts ERP

Operational Sequence

When paged by the polling channel, the STU receives, decodes and then the Power Module outputs a 10-watt RF signal on the Return Link that tells its ID, best receiving station ID and instructions on delivery of that data. The STU then receives the data on a Data channel and sends back ARQ over the Return Link at 10w. To transmit data back, access is acquired through the Return Link, and data is transmitted over one of the Data channels.

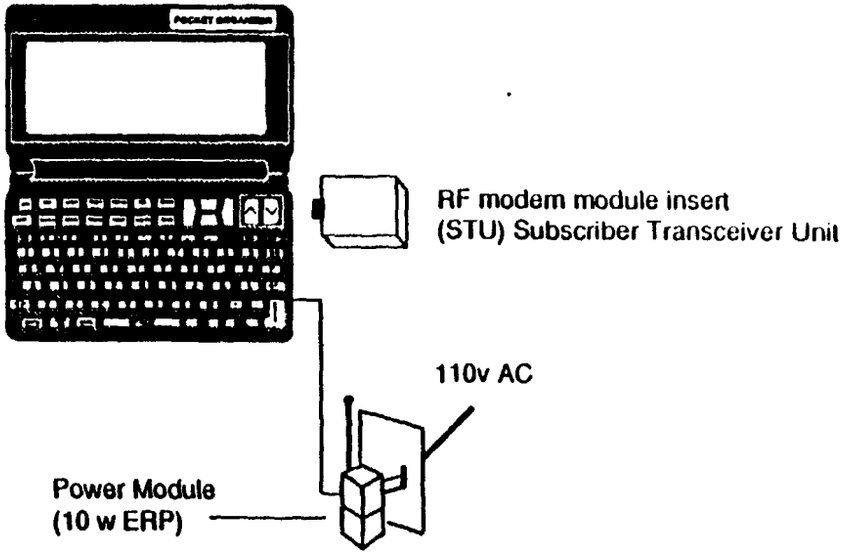

Product Specifications

- RF modem module
  - (1" X 2.5" X 0.25") STU
  - Match pager receiver specs.
  - 100 mw transmitter
- Power Module Unit
  - 10-watt ERP
  - 110 AC wall socket input
  - RF amplifier + power supply
  - charger feedback option

PageMart