of the equal signal strength "points" is crucial to the bold and unfounded statement by MPR that the 3000 baud rate is the upper limit and totally unrealizable in actual practice.

Finally, there is every reason to believe that the European paging standard, ERMES, will also be implemented in the U.S. similar to POCSAG, and that ASIC technology will quickly advance to encompass 4 FSK modulation into very low-cost receivers as has been characteristic of the paging industry. Thus, the comments stated below by MPR (page 26) are totally false and misleading:

> PageMart is almost two-thirds greater than this rate, which would indicate that the 4.800 bps polling channel rate will provide a marginal degree of operation even if it could operate at all. Lowering the data rate to something the order of 3000 baud would appear to be required. Attempts to increase the polling channel data to 9600 baud or higher does not appear to feasible in the type of system proposed by PageMart.

Once again MPR continually mixes bps and baud since PageMart stipulates bps not baud because PIMS can accommodate any type of modulation approach which will have desired data rate, power and cost performance. There is no question that PIMS can technically achieve a proportionate data rate in a 25 kHz channel that MTel can achieve in a 50 kHz channel, given Shannon's law in information theory.

MPR claims that PIMS is a Mobitex look-alike.

> "The PIMS system proposed by PageMart is very similar to the Ericsson Mobitex system currently operated in Sweden, Norway, Finland and Canada. This system equipment is also used by RAM Mobile Data Ltd. in their nationwide mobile data network in the United States. Thus it is hardly advanced in nature, nor is it the first system of its type."

PIMS is a novel cellular paging type architecture. MPR does not understand PageMart's PIMS proposal. It is common knowledge that the Mobitex packet radio network is a two-way, real time, interactive, data network system requiring channel pairs (MPR, page 23). PIMS is a two-way, non-real time, non-interactive data network. Therefore, the similarity ends at the two-way portion of the comparison. The tremendous advantage of PIMS lies in the combination of the novel use of simulcast paging technology for radio locationing, the use of cellular frequency reuse principles for massive improvements in throughput and the innovative notion of utilizing very low-power/low-cost office cells and high rise office building cells to significantly enhance reuse (similar to future PCS voice proposals). Therefore, the similarity is that both Mobitex and PageMart take advantage of frequency reuse, but the comparison ends there (not in the long list of features).

The fact that both Mobitex and PIMS both utilize multiple frequencies for trunking efficiencies has to do with the recognition that any high throughput system that wishes to achieve full economies of scale will design a wireless system to take maximum advantage of the investment at each cell site. This "spreading" of fixed site cost cannot be done with a single channel system, such as MTel's NWN. Moreover, NWN requires a two-way network of receivers but cannot take practical advantage of cellular reuse within contiguous urban areas due to destructive cochannel interference[12] because it operates on one channel. Unfortunately, it is the major cities where the vast majority of subscribers will be for AMS services.

---

[12] MTel proposes a dynamic zoning method to increase capacity but never explains what improvement it would make. Also, it never fully explains dithering and how it can accomplish dynamic zoning with a mobile customer base.

B. Comments on the Data Link Layer Aspects of the PageMart Petition for Rulemaking.

MPR asserts that PIMS' polling channel limits capacity to an order of magnitude less than proposed.

> "The simulcast polling channel, used for radiation and data channel assignments, is a constraining factor in overall system capacity. Using PageMart's message model, the best case scenario could support no more than 3000 messages per hour, the equivalent of 12,000 subscribers per MSA. This is an order of magnitude less than the 100,000 to 200,000 subscribers claimed for a 4800 bps system."

PIMS' polling channel doesn't limit proposed capacity. MPR redesigns PIMS' Acknowledgment process so that the entire polling channel is consumed with the task of polling following acknowledgment to re-establish the packet circuit it has already established, rather than the polling channel being used as it was intended, namely for location of the subscriber transceiver module (STM) as to its best serving transmitter (TXID). MPR confuses the error protection and acknowledgment process with the purpose of the polling channel to locate the STM.

> **MPR:** "For error protection reasoning, PageMart has decided to segment messages into packets of "2 to 5 POCSAG batches." The implication is that each data packet must be assigned a data channel via the poll channel protocol, because each packet is individually acknowledged and retransmitted if required, which would require 30-75 transactions on the poll channel. Best case, the, the poll channel could handle the equivalent of 3000 average size data messages per hour, assuming a 5 batch packet length. At a 2 batch packet length, this decreases to 1200 data messages per hour."

Once the polling channel has located the subscriber transceiver module's best serving transmitter identification (TXID), its job is done. The return link and serving transmitter form a packet network that is maintained until the acknowledgment process ceases to function (i.e. the battery failed). Simply getting an ACK or NAK does not reactivate the polling link.

"Moreover, in reviewing the three versions of ARQ in popular use,[13] "none of the techniques listed below would require a reactivation of the polling channel:

1. **Stop and Wait ARQ** uses the simple stop-and-wait acknowledgment scheme. The sending station transmits a single frame and then must await an acknowledgment. No other data frames can be sent until the receiving station's reply arrives at the transmitting station. The receiver sends a positive acknowledgment (ACK) if the frame is correct and a negative acknowledgment (NAK) otherwise."

2. **Go-back-N ARQ is one variant of Continuous ARQ**. In this technique, a station may send a series of frames determined by window size. If the receiving station detects an error on a frame, it sends a NAK for that frame. The receiving station will discard all future incoming frames until the frame in error is correctly received. Thus the transmitting station, when it receives a NAK, must retransmit the frame in error plus all succeeding frames.

   With go-back-N ARQ, it is not required that each individual frame be acknowledged. For example, station *A* sends frames 0, 1, 2, and 3. Station *B* responds with ACK1 after frame 0, but then does not respond to frames 1 and 2. After frame 3 is received, *B* issues ACK4, indicating that frame 3 and all previous frames are accepted.

3. **Selective repeat continuous ARQ** provides a more refined approach than go-back-N. The only frames retransmitted are those that receive a NAK. "As an example, if in a long message transmission" only frame 2 need be retransmitted. This would appear to be more efficient than the go-back-N approach. On the other hand, the receiver must contain storage to save post-NAK frames until the error frame is retransmitted, and the logic for reinserting the frame in the proper sequence.

PIMS intends to use a continuous ARQ approach. Although as previously mentioned, none of the ARQ approaches mentioned above must re-establish the original "handshake" in the event of any ACK/NAK acknowledgment which MPR has assumed in their analysis of PIMS to drastically reduce polling channel capacity (page 3). The implication of MPR's implied redesign of PIMS is that each data packet must be assigned a data channel via the polling channel

[13] Handbook of Computer Communications Standards - Volume I, William Stallings, Stallings/MacMillan, 1987.

protocol, because each packet is individually acknowledged and retransmitted if required, which would require 30-75 transactions on the poll channel). Therefore, the MPR, inappropriately coupled with a channel utilization factor to reflect actual operation, reduces PIMS' polling channel capacity by a factor of 37.5 is entirely wrong. Acknowledgments are made in the reserve synchronous time slots of the return link (see A15, Exhibit XV, PageMart Petition for Rulemaking). Therefore a continuous packet circuit is established that does not require any additional handshake via the polling channel irrespective if ACKs or NAKs are received.

PIMS' control channel can support 450,000 subscribers at 4800 bps. MPR is approximately correct (assuming the need for preamble) by arriving at 112,700 poll (and Go To channel) transaction per hour at 4800 bps or 225,400 transactions per hour at 9,600 bps. Using the above MPR assumptions and a continuous ARQ approach previously discussed, the following is a table of results:

Theoretical Control Channel Capability

	Transactions Data Rate	Transactions Per Hour	Reduction due to to Polling Channel Handshake/Packet	Utilization Assumption	Net Transactions Per Hour	**Total Subscriber Capacity**
MPR	4800	112,700	1/30	80% (Incorrect)	3,000	**12,000**
PageMart	4800	112,700	none(Continuous)	NA (Theoretical)	112,700	**450,000**
PageMart	9600	225,400	none(Continuous)	NA (Theoretical)	225,400	**901,600**

Therefore, the actual poll transactions are 37.5 times (greater than) that calculated by MPR which in turn has a critical impact on PIMS subscriber capacity. The actual theoretical capacity of the polling channel is over 450,000 subscribers per MSA at 4800 bps to over 900,000 subscribers per MSA. It should be noted that in NWN's scheme, both ACK/NAK and registration (automatic and manual) and retransmission (particularly if dynamic zoning is

used) significantly reduces throughput of their system and that elaborate schemes of auto identification to avoid this problem have been devised, but not confirmed, (page 10, Exhibit E, Technical Feasibility Demonstration by MTel, June 1, 1992), could be extremely costly.

MPR asserts that if inbuilding cells are deleted and 9 cell reuse is required, data channel capacity is reduced.

> "Each data channel can support no more than 600 subscribers. Total system capacity is dependent on implementing a large number of non-interfering cells, subject to the limits of the poll channel."

Inbuilding cells are in commercial operation today and 4 cell reuse has been validated by MPR's own authoritative source. Three major issues are to be made with MPR's analysis. First, the estimates do not include any building cell or office cell reuse, therefore, MPR has again redesigned PIMS to reduce it to having the same major deficiency as NWN, namely no provision for significant messaging service in buildings, yet that is where AMS is intended to reach business people most of the time. NWN would appear to be optimized around the conventional paging paradigm of meeting the needs of service people and tradesmen that do not have offices but frequently work on maintenance or construction projects in and outside office buildings, homes, etc.. PageMart believes that AMS requires highly efficient use of spectrum given that business people will be in offices as well as mobile, and not to take advantage of low cost messaging services, using PC-based office cells, given the present explosive growth in highly portable, personal computers is to ignore current trends and future forecasts (Exhibit 9). Second, MTel continually refers to its nationwide system capacity of 800,000 subscribers (with an early estimate of 34 zones now increased to 57) which implicitly assumes maximum theoretical data rate capacity in most all the major cities, not actual or estimated capabilities based on practical

data throughput. Third, a 9 cell reuse pattern is assumed for PIMS that is irrelevant given our earlier comments on the physical layer critique by MPR.

The following table provides the comparison of PIMS "capacity" as determined by MPR and PageMart.

Data Channel Capacity Comparisons (Major MSA)

			Geographical Cells Only			Geographical Building/Office Cells		
Analysis	PIMS Phase	Data Rate	Concurrent Data Channels	Theoretical Capacity	Actual Capacity	Concurrent Data Channels	Theoretical Capacity	Actual Capacity
MPR	growth	4,800	80		34,000			
MPR	growth	4,800	35.6 (9 cells reuse)		15,000		(ignored)	
PageMart	growth	4,800	80	65,000	35,000	246	202,000	109,000
PageMart	growth	9,600	80	130,000	70,000	246	404,000	219,000
PageMart	mature	4,800	120	98,000	52,000	556	457,000	243,000
PageMart	mature	9,600	120	197,000	104,000	556	914,000	486,000

Therefore, simply because NWN's architecture cannot accommodate office and building cells, MPR elected to ignore PIMS' capability to do so. This is entirely inappropriate and self serving for comparison of PIMS with NWN.

MPR claims the return link channel cannot work as described.

> "The return link media access protocol cannot work as described. The information content of the required messages cannot fit within their allocated time slots, and no allowance has been made for real-world device characteristics in terms of timing, synchronization and turn-on times. A realistic return link protocol would restrict the poll channel transaction rate even further, reducing system capacity accordingly."

PIMS' control link channel functions as proposed with one code word. MPR first redesigns PIMS with an arbitrary assumption that leads to an immediate reduction in return link capacity by a factor of 37.5. MPR, in its redesign of PIMS, requires the subscriber transceiver unit to acknowledge with its

"cap code" address as well as (1) the best serving transmitter identification, and (2) message disposition, so that the return link information will exceed the 20 data bits per frame available in POCSAG format, when MPR knows the polling channel and return link channel is synchronized and doesn't require subscriber identification to complete a poll.

MPR states on page 4 and 5 that they are aware that the return link channel is time-synchronized to the polling channel:

> "The return link channel is time-synchronized to the poll channel and uses POCSAG batch formatting."

MPR then goes on to state on page 5 that PIMS doesn't need to transmit cap code address in a synchronized system <u>but never reflects this result</u> in its polling channel capacity calculations:

> "Alternatively, the device's POCSAG address may not need to be transmitted, since the system knows which device's response is expected, albeit at a cost of increased complexity in the network processing."

In fact, the entire review of (1) Poll Channel Capacity, (2) Data Channel Capacity, and (3) Return Link Media Access Protocol is a totally unnecessary. The fact is that the Return Link channel has 20 bits of data available and this is more than enough for the best serving transmitter identification (TXID) in each market (excluding office cells) and short message disposition code. Since 10 bits are still available, we proposed also transmitting cap code address, in an abbreviated form, as a reliability check <u>but it is not required at all</u>. The following table describes the bit requirements currently envisioned for each type of transmission:

<u>PIMS Return Link Message Format</u>

Mode	Transmitter ID(TXID)	Subscriber Cap Code	Message Length	ACK/NAK Message #	Message Disposition	Totals Bits Code Words
Message Response	7	10*	-	-	3	**20 Bits 1 code word**
ACK/NAK	-	10*	-	10	-	**20 Bits 1 code word**
Access (for data channel)	7	18	5	-	-	**40 Bits 2 code words**

*** Optional**

MPR's analysis is flawed because they erroneously come to the conclusion that PIMS must transmit the complete POSCAG address when they have concluded it is unnecessary (see page 5). MPR states:

> "There are several problems with the return link protocol as described. First, the radio location poll-response is specified to contain the "base station ID or call sign, and its POCSAG address plus the disposition of this message." This will require a response of at least two codewords minimum, possibly three or four, depending on length of the base station ID (Page A9 implies the base station ID is one frame (2 codewords) in length). Thus, the poll response cannot be transmitted within its reserved time slot and the maximum poll rate of the system must be reduced (and thus maximum system capacity) to reserve adequate return link time for poll responses."

Since it is clear from the previous table that only 10 bits are needed (transmitter ID plus message disposition) and not 20 bits for 1 codeword, MPR criticism of the poll response is completely incorrect.

Similarly, MPR's criticism below of PIMS ARQ response is equally unfounded, given the need to likewise transmit only 10 bits including ACK/NAK plus the identify of the packet containing the error:

> "Second, a similar problem occurs for the ARQ response and for the random access slots. The ARQ response message is also likely to require two codewords to encode the device's POCSAG address, ACK/NAK status and message number (required for duplicate

detection/elimination). The data channel reservation request "indicates the message length to be transmitted, the serving transmitter site identification and the subscriber unit identification", which would require anywhere from 2-4 codewords, depending on length of base station id.

Thus, none of the return link channel messages will fit within the time slot allocated for their transmission."

Therefore, once again, only 10 bits or one code word is needed to provide the necessary response in a synchronous system in an ACK/NAK mode. In addition, the STM's ACK/NAK is synchronized in one trailing frame following each packet which is intentionally left blank in the data channel.

It is further interesting to note, that MPR attempts to find some problem with the error correction with PIMS when MTel specifically requested of MPR that NWN not be analyzed and recognized the non critical nature of this exercise that they unsuccessfully attempt to highlight with regard to PIMS (page 17, Final Report on NWN Protocol):

> "Any error protection scheme is a tradeoff of efficiency, complexity and probability of error. MTel's proposed protocol also utilizes ARQ, where messages with errors that are uncorrectable are retransmitted. These retransmissions obviously decrease the effective throughput of the channel and add to the overhead. The resulting "wasted" capacity is a function of the expected message success rate and the maximum number of retransmissions that will be attempted before discarding the message as undeliverable. <u>At MTel's request, the effect of retransmissions was not analyzed</u>. A realistic traffic model for message success rate has not been developed. Note, however, that many retransmission algorithms exist that minimize retransmission overhead, such as polling the device on non-acknowledgment rather than retransmitting immediately. These and other techniques are under review."

MPR further states that they are not familiar with a transceiver design that can turn on and off even in a synchronous system in the bit intervals that PageMart require (implied at 4800 bps). MPR states as follows:

"However, the more serious problem is that the return link media access protocol as described can not be implemented in real devices in a cost-effective manner. Back-to-back single codeword transmissions from different subscriber devices are required, with absolutely no time allocated for preamble, word synchronization or guard time between transmissions. This would require the simulcast transmitter network, all dedicated and co-located base receiver sites and all subscriber devices to be synchronized to each other within fractions of a bit interval. It would mean, for example, a system-synchronized clock would have to be distributed to all receiver sites, whether at co-located base stations, dedicated geographic receivers, building or office cells.

Even assuming such clock synchronization were economically feasible, allowance must still be made for the non-zero transmitter turn-on and decay times in the subscriber transceiver module. Fast attack and decay transceivers would significantly add to the cost of the STM, especially since they must be frequency agile as well.

To eliminate this non-realizable requirement for perfect synchronization, the return link protocol must be redesigned to allow for reasonable attack, synchronization and decay times, as well as expected message lengths. A reasonable conjecture might be to allow an additional codeword interval per return link message to allow for preamble, sync and guard intervals."

The aforementioned "non-realizable requirement for perfect synchronization" is completely incorrect. To address this issue, we will consider the step response of a composite RF filtering circuit consisting of nominal Q values of 100. Therefore, the equivalent low pass LaPlace transfer function equation of that passive network is.[14, 15]

$$F(s) = \frac{K}{(T_n S+1)^K}$$

---

[14] Daniel Graupe, Identification of Systems, Van. Nostrand Reinhold Co., 1972, pp. 64-66.

[15] Streic, V. Approximate Determination of Control Characteristics of an Aperiodic Response Process. Automatism, March 1960.

where, $T_n = 1/W_n$ the 3 dB response frequency of the equivalent base band circuit; and, $Q = W_o/W_n = 100$ (where W_o = carrier frequency); then, $W_n = W_o/100$; or $f_n = f_o/100 = 930$ MHz/100 = 9.3 MHz.

Thus, Tn = 17.11 nanoseconds/radian;

or, Tn = 107.53 nanoseconds/cycle

Now simple RC circuit analysis the rise time of an RC single root circuit is 2.2 RC or it takes 2.3 time constants to arrive at the 90% final value point. Therefore, it would take 2.3 x 17.11 = 39.35 nanoseconds for a single tuned circuit at 930 MHz (with a loaded Q of 100) to build up to the 90% final value. Hence, 2 to 4 cascaded tuned circuits would yield an elapsed response of less than 0.1 microseconds. Consequently, the rise time (and decay time) is less than 0.05% of a bit interval time. Thus, the "fast attack" circuit that MPR finds is a "non-realizable" requirement is entirely achievable.

MPR states that channel access protocol severely limits capacity.

> "The inbound data channel traffic capacity is severely hampered by the design of the channel access protocol. In the best case, inbound traffic can not exceed one-sixteenth of the outbound traffic, based on number of messages."

PIMS random access protocol permits up to 100 times greater subscriber access than NWN. First of all, PIMS has 8 frames per batch cycle which occurs on alternate batch cycles to accommodate a higher throughput of subscribers wishing access to a data channel than if the PIMS simply allowed all subscribers to sync-up to the random batch access interval and broadcast their request for data channel on a slotted ALOHA basis. MPR focuses on the probability of accessing a channel under conditions where a large base of subscribers all wish to make a request for a date channel reservation rather than a PIMS' ability to

accommodate a factor of 8 higher throughput than single time slot (on a single channel).

MPR goes on to state:

> "Random access is just that, random, and constraining the choice of slots to different segments of the population does not affect the probability of collision once the size of the population outweighs the number of available slots."

However, its not the probability of collision that we're interested in, but the subscriber access throughput to reserve a data channel for a return data channel transmission. For example, a gas station with 8 pumps and 8 queues handles more customer throughput than 1 pump and 1 queue even though all eight lines may be equally long. However, the probability of obtaining pump service from a "random queue" in the aforementioned example is approximately the same (or probability of collision). Therefore, PIMS' throughput is the issue, not the probability of collision. Note that PIMS offers subscribers access to the return link on alternative batches. This works out to give PIMS between 50 to 100 times the access NWN affords their customers because NWN offers a 7+ millisecond time slot after each message, and also must set aside time for ACK/NAK. Thus, long messages could deny access to many subscribers while building long queues.

Furthermore, PIMS does not simply perform as a slotted ALOHA manner as MPR states:

> "One-fourth of the total return link is dedicated to this function and is accessed in a slotted-ALOHA manner."

The correct concept is multiple slotted ALOHA <u>with capture</u>. The difference is between maximum channel throughput efficiency of 37% per slot (frame) and

57% per slot with capture.[16] Thus, with subscriber units at varying distances from each return link receiver site, some collision will not occur because certain receiver sites will capture based on the strength of one STM over another. Also, because of the distributed nature of the STM's population throughout a city, further reductions in collisions will result given the spatial dispersion of STMs to receiver site groups.

MPR states their concern about PIMS' turn-on and turn-off time interval in a cellular system that has mutually exclusive channel assignments of its adjacent cell. The separation between non-overlapping cells provides adequate isolation in the "key down" overlapping with a "key up" transmitter at least one cell removed. MPR states the following:

> "PageMart proposes two alternatives to transmitting the base station call sign. In the first alternative, "one geographic cell, in each four geographic cell group, is to broadcast its station identification in each frame for a designated batch. During this batch, the other three geographic cells simply broadcast the sync pulse and power down". Presumably, these high powered transmitters will be able to power down instantaneously, and power up again instantaneously, so as not to interfere with the call sign transmission of the neighboring cell. It also implies that the signal strength measurement is to be taken during this interval, during the normal wakeup period of the subscriber device, i.e. 2 codewords or 13.3 milliseconds."

One has to wonder what the overlap problem might be, however, in a TDD system such as NWN where significant inefficiencies may be required to achieve

---

[16] Distributed Telecommunication Networks, Roy Rosher Lifetime Learning Publication (Wadsworth Inc.) 1982. The analysis of the ALOHA packet broadcast channel assumed that, when any part of two or more packets overlap, all packets involved in the collision must be retransmitted. In reality, there is at least some probability that one of the packets involved in a collision will be sufficiently strong to capture the receiver and be received accurately. If this were the case, not every packet involved in a collision would have to be retransmitted, which would reduce the apparent interference and increase the channel throughput at any level of traffic.

a "quieting" period between the high-powered forward link and the low powered subscriber return link.

MPR asserts that NWN is 2.7 times more spectrally efficient than PIMS

> "The proposed MTel NWN system is 2.7 times more spectrally efficient than the equivalent PageMart PIMS system, when considering the bits delivered per frequency domain, time domain and space domain."

PIMS' capacity correctly stated is as proposed to the Commission. Taking into consideration the MPR redesign of the PIMS system, it is not surprising that MPR ends up with NWN being 2.7 times more spectrally efficient. However, lets look at the facts causing such a dramatic change of estimate to that provided by PageMart in their PIMS Rulemaking document:

PIMS Capacity Factors Considered by MPR and PageMart

Factor	MPR	PageMart	Comment
Poll Channel Capacity (Transactions/Hr) @ _____bps	3,000 @4,800	112,700 @4,800 225,400 @ 9,600	MPR incorrectly assumed PIMS requires more than one codeword to respond.
Office & Building Cells	None	Represents 2/3 System Capacity	MPR arbitrarily disregarded PIMS throughput capability using office/building cells.
Geographical Cell Reuse	9 cell Reuse	4 Cell Reuse	MPR elected to ignore current cellular reuse technology by their own cited authority, Dr. Lee.

What is difficult to understand, is how a simulcast system such as NWN in a major MSA can expect to be as efficient as a cellular system including office and building level reuse capability. MPR's approach was to deny the possibility of office and building cells, reduce the throughput of the polling channel by a factor of 37.5 (even when the MPR author recognized that it didn't have to function the way MPR assumed) and to require PIMS to use a 9 cell reuse plan that is 3 times less efficient than their own cited cellular authority advocates.

MPR then goes on to compare PIMS to NWN using their assumption that disables the polling channel.

PIMS Capacity (4800bps -10 hr busy period)

	PageMart	MPR	Difference Factor
Polling Channel	450,080	12,000	(37.5X)
Data Channels (Geographical Cells Only)	35,000	N/A	-
Data Channels (Geo., Building & Office Cells)	109,000	N/A	-

Therefore, frequency reuse is not relevant, and building and office cells are also not relevant to MPR's analysis. However, looking at their analysis (which they say is the same), one sees what system throughput enhancing assumptions they have used to ennance NWN's net data rate:

NWN

5 Channel Data Rate (250 kHz)

@ 8,150 messager/hr. X 6,000 Bytes / Message X 8 Bits / 1 Byte X hr. / 3600 Sec = 108,667 Bits / Sec

1 Channel Data Rate (50 kHz)

$\frac{108,667}{5}$ = 21,733 bps Net or (91% efficient)

Therefore, system overhead (location, ACK/NAK, check sum only) equals (24,000 - 21,733)/24,000 = 9.4%. PIMS however adds 42% forward correction and other overhead for POCSAG. It is therefore interesting to note the MTel claims that NWN has POCSAG forward error correction, but does not include it in their calculations (PIMS assumes a 42% reduction in throughput) that assumes NWN total overhead is a mere 9%

C. Comments to Comparison of Maximum Capacity of PageMart and MTel Messaging Services.

MPR claims NWN has 2.5 times the capacity of PIMS.

> "This brief analysis shows that the MTel NWN system supports nearly 2.5 times as many subscribers as the PageMart PIMS systems, when considering the bits delivered per frequency domain, time domain and space domain."

PIMS has an order of magnitude more capacity than NWN on a per hertz per MSA basis. The reason the result was achieved is that (1) MPR reduced PIMS polling channel capacity by a factor of 37.5 times and (2) neutralized the capability of PIMS, by assumption (1), to employ frequency reuse either in geographical cells or building cells. In effect the 6001 messages/hour results converts PIMS to a simple simulcast system operating at a gross data rate of 9.6K bps in a 25 kHz channel. However, PageMart has shown that none of MPR's key assumptions are correct. If the aforementioned corrections are used, the following is a valid comparison between PIMS and NWN, using MPR's own assumption and analysis of relatively short message size (3,000 characters):

Subscriber Capacity Comparison (Major MSA)

System	Phase	Rate (bps)	Geographical Cells Only**	Geo., Building and Office Cells
MPR analysis				
PIMS	growth	4,800	46,161	-
NWN	mature	24,000	81,635	N/A
			(114,500 CRC only)	
PageMart analysis				
PIMS	growth	4,800	190,000	590,000
PIMS	growth	9,600	380,000	1,180,000
PIMS	mature	4,800	286,000	867,000*
PIMS	mature	9,600	572,000	1,734,000*

* Limited by polling channel capacity
** With Forward Error Correction

Assumptions:
1. Same as MPR except for Polling Channel
2. PIMS has 58% POCSAG protocol efficiency (forward error correction and sync bit)
3. NWN has 83% protocol efficiency (no forward error correction simply CRC error detection)
4. Each system uses 250 KHz

Therefore, when the false MPR assumptions are removed, the real comparisons dramatically favor PIMS and its ability to substantially grow the number of cells in buildings and offices over time for further frequency reuse. NWN however is "capped" on capacity as are all simulcast paging systems.

Exhibit 1

United States Patent [19]

Lee

[11] **Patent Number: 4,932,049**

[45] **Date of Patent: Jun. 5, 1990**

[54] **CELLULAR TELEPHONE SYSTEM**

[75] Inventor: **William C. Lee**, Corona Del Mar, Calif.

[73] Assignee: **PacTel Corporation**, San Francisco, Calif.

[21] Appl. No.: **307,070**

[22] Filed: **Feb. 6, 1989**

[51] Int. Cl.[5] H04B 7/10

[52] U.S. Cl. 379/60; 455/33; 379/59

[58] Field of Search 379/58, 59, 60; 455/33

[56] **References Cited**

U.S. PATENT DOCUMENTS

4,144,411	3/1979	Frenkiel	379/60
4,485,486	11/1984	Webb et al.	455/33
4,704,734	11/1987	Menich et al.	455/33
4,727,590	2/1988	Kawano et al.	455/33
4,755,998	10/1988	Felix et al.	379/59
4,771,448	9/1988	Koohgoli et al.	379/60
4,790,000	12/1988	Kinoshita	379/59
4,794,635	12/1988	Hess	379/60
4,799,253	1/1989	Stern et al.	379/59

Primary Examiner—Robert Lev
Attorney, Agent, or Firm—McCubbrey, Bartels, Meyer & Ward

[57] **ABSTRACT**

A cellular telephone system is described of the type wherein a plurality of contiguous cells, each having a different assigned set of transmission frequency channels, are arranged with handoff circuitry for maintaining continuous communication with mobile telephones moving from cell to cell. The system includes at least one cell having a plurality of transmitting and receiving antenna sets. Each set is positioned at a respective antenna sub-site at the perpibery of the cell or other suitable location, and is configured so that propagation and reception of signals is limited to substantially within the boundaries of the cell. Control circuitry monitor the strength of the signal received by each of the antenna sets at each frequency channel in the assigned set. Transmission, at each frequency channel in the assigned set, is confined to the antenna set at one sub-site in the cell having the strongest received signal at each frequency.

15 Claims, 2 Drawing Sheets

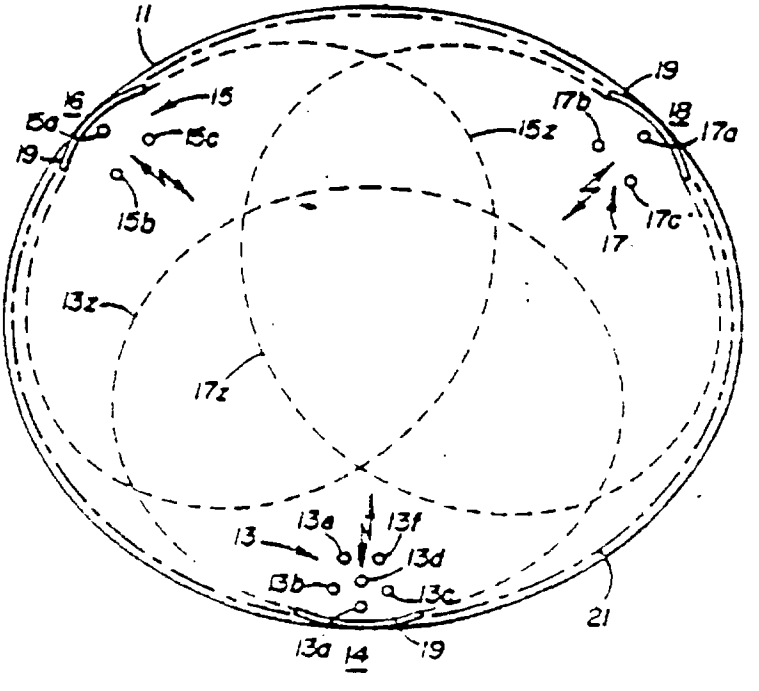

Exhibit 2

MicroLite™

Fiber Optic

Decibel
Multi
Media
Microcell
Systems

TECHNOLOGIES MEET

WHERE COMMUNICATION

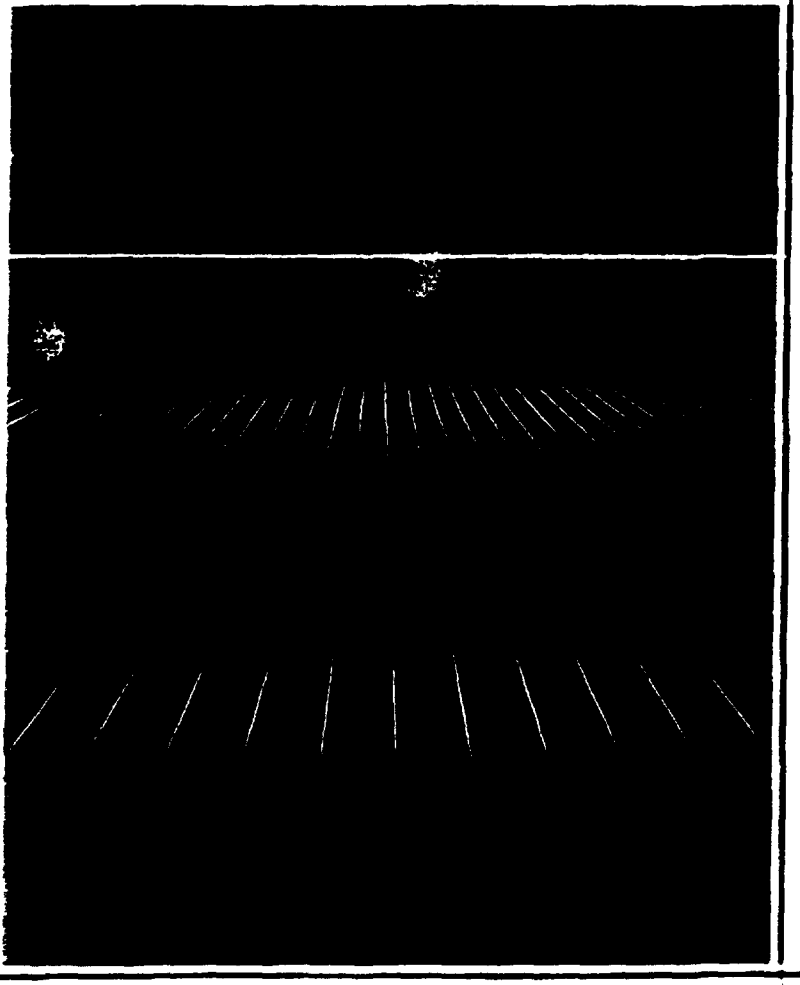

Increase Service Area Capacity And Add Cellular Subscribers.

Most cellular telephone users, especially those who use hand-held phones, know the feeling of being disconnected suddenly, without warning. It may happen while you're driving in congested rush-hour traffic, or as you enter a canyon, tunnel, parking garage or building. It may even happen as you walk or drive through an airport or around a corner.

The problem is often traced back to insufficient capacity in high-demand areas, or to "dead or weak spots" created by obstructions such as high-rise buildings, parking garages or tunnels. The solution: MicroLite,™ the patented fiber optic microcell system developed by Decibel.

Provide Clean, Clear Signals In Congested Or Blocked Areas.

MicroLite was designed to meet the growing demands of system operators for increased cellular subscriber capacity and improved area coverage. By locating the microcell where the subscribers are concentrated such as in downtown areas, buildings, airports or convention centers, MicroLite provides improved coverage and enhanced system capacity.

In highly congested areas, a series of individual MicroLite units operating as stand-alone microcells can be used to divide existing cells and increase the call handling capacity in crowded cellular areas. Several MicroLite units can be placed at one location to form sectorized microcells.

The Power And Flexibility Of Fiber Optics.

MicroLite microcell is a compact, fiber optic-based, low-power device with the ability to enhance cell site coverage and capacity with unmatched flexibility. All signal processing takes place at the cell site. Radio signals travel to and from the cell site over optical fibers. This high-quality, lightweight media allows unprecedented flexibility. The cellular network designer is no longer constrained by site selection criteria dictated by the need to have radios and associated equipment at the antenna site.

A complete fiber optic microcell system includes a cell site optical interface panel and a remote transceiver enclosed in a weather-resistant cabinet. The remote contains a linear RF power amplifier, a low noise receiver amplifier, transmit and receive filters, an optical transmitter and optical receiver. Several power output options are available to meet a variety of coverage and capacity requirements. An optional alarm system is available to monitor and report on the status of the remote transceiver.

For cellular systems, MicroLite offers more than just a "fill in" system. It provides an exciting link to the future of personal communications. The small size and "go anywhere" design of the remote

transceiver allows new flexibility to locate cell sites where they are needed most. MicroLite eliminates problems associated with environmental and aesthetic objections, exorbitant real estate costs, zoning problems or unavailability of site locations.

MicroLite Handles TDMA, CDMA As Well As Narrow Band And Traditional Analog AMPS.

The MicroLite system is designed to be transparent to the cell site. This ensures that the investment in microcell equipment will continue to perform even if you change MTSO or base station suppliers. High linearity throughout the system ensures compatibility with TDMA, CDMA and N-AMPS as well as regular analog systems. This linear design supports both today's analog systems and tomorrow's digital modulation techniques. System capacity can be 70 or more analog channels. Distances between the cell site interface and the remote transceiver can be as long as 24 miles (40 km), and can fill in RF dead spots several miles across.

Place Cell Sites At Convenient, Economical Locations.

In most urban areas, cost effective cell sites are not always available. With MicroLite's compact size and flexibility, you can select the ideal location for maximum cell site coverage at the lowest cost. MicroLite mounts easily on utility poles, billboards, buildings and at a variety of unobtrusive locations that provide the optimum coverage for high use cellular areas. There is no need for building additional towers, and expensive site preparation costs are eliminated. Existing cell sites may be used to house equipment serving several microcells, further reducing site costs while improving maintenance speed and efficiency.

Within metropolitan areas, the microcells can be vertically stacked in office buildings to enhance portable coverage or to form wireless telephone systems. MicroLite units can also operate within or along the edge of an area served by an existing cell site to provide coverage to weak signal areas or dead spots. A series of MicroLite remote transceivers can be located along highways to provide coverage through canyons, valleys or tunnels.

MicroLite is a member of Decibel Products' Multi Media Microcell Systems family. It is designed to work with other products including MicroFill.™ Decibel's Structure Specific 75 ohm communications system, the 16-Channel DB4416 Power Combiner, PrismPlus, and a selection of specialized low-profile interior and exterior antennas. Together, these products provide cellular system engineers with the tools to meet the challenges of today's subscribers while building the foundation for future personal communications networks.

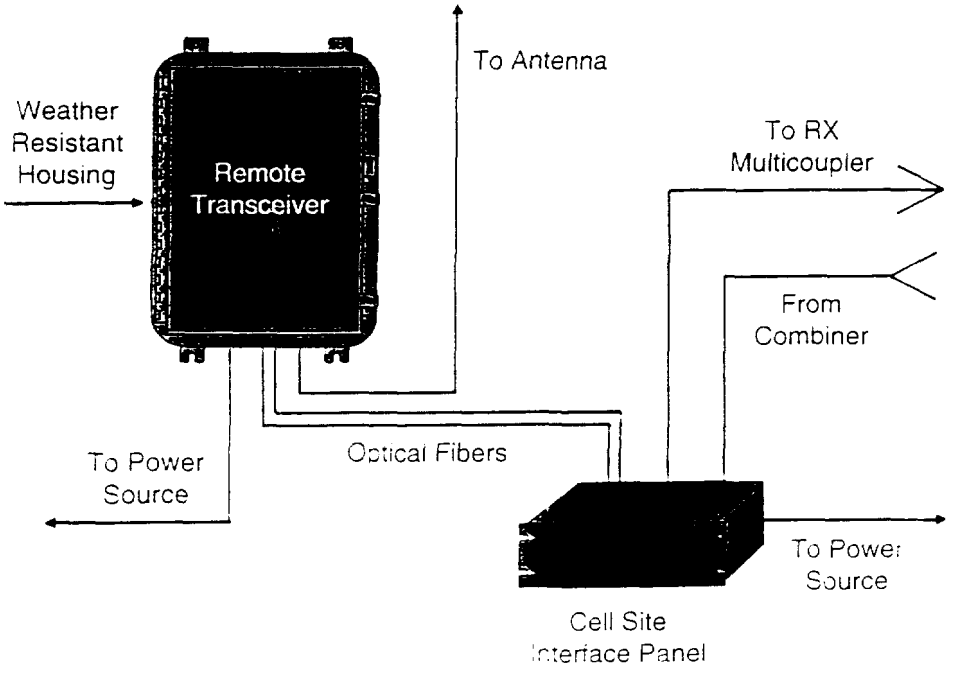

Decibel Is Committed To Your Future Applications.

Decibel products have more than 40 years of development, research and manufacturing behind them. Our technical leadership and dedication to excellence in design and system integration is evident in every product we produce. Service that begins with the initial consultation, continues with comprehensive customer support after the sale. Our 24-hour telephone hotline assures continuous, uninterrupted service. Decibel is committed to providing the most advanced communications technology to accommodate tomorrow's applications.

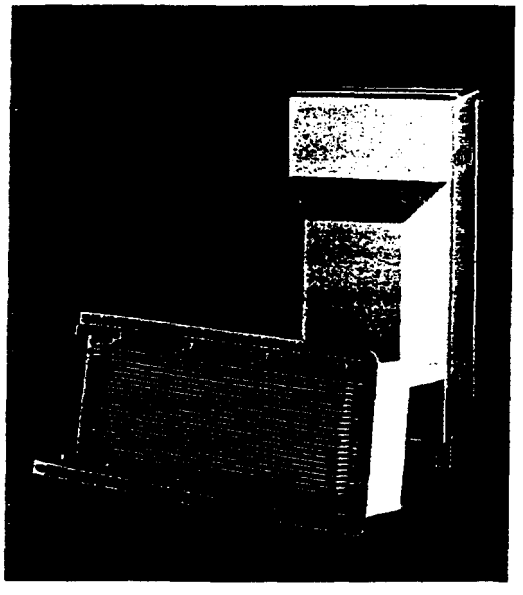

MicroLite™ Remote Transmit and Receiver Module System with Power Supply/Mount.

Optional RF Alarm System with LCD Display and Open Collector Output.

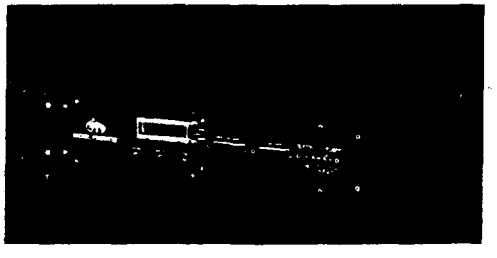

Cell Site Interface Panel.

DECIBEL

Multi Media Microcell Systems

Where Communication Technologies Meet

3184 Quebec Street
P.O. Box 569610
Dallas, Texas 75356-9610
214•631•0310
Fax 214•631•4706

An Allance Telecommunications Company

Copyright 1993
Decibel Products
Company

DB471 . -XY

Compact Broadband Directional Antenna

800- 960 MHz

Model Number	DB471N-XY	DB471E-XY
Termination	Type N-Female	7–16 Female
Frequency Range	800-960 MHz	
Gain	5.5dBd (7.6dBi)	
VSWR	1.5 :1 or better	
Beamwidth (3 dB from max)	Horizontal : 110° Vertical : 70°	
Front to Back Ratio	>20 dB	
Polarization	Vertical	
Max. Input Power	60 watts	
Other Information	Mounting bracket can be rotated 90°, Connector weather guard included.	
Weight	2.3 oz. (1000 g)	
Max. Wind Area	64 in² (406 mm²)	
Windload	22 lbs.	
Max. Wind Speed	100 mph. (160 km/std)	
Material	Aluminum base PC Board ABS Radome	
Color	Off-white	
Mounting	Large hose clamp	
Lightning Protection	Metal parts at ground	
Packing Size	12"x12"x10"	
Shipping Weight	4 Lbs. (1800 g)	

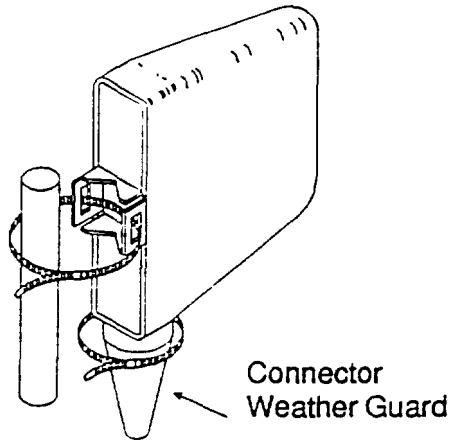

Mounting to a Vertical Member

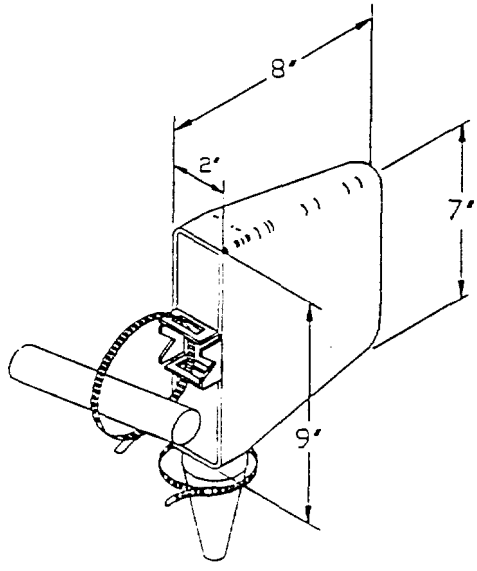

Mounting to a Horizontal Member

Typical Pattern

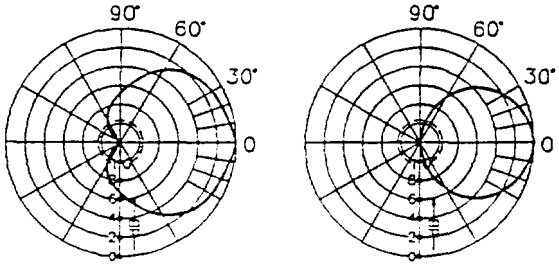

Horizontal Vertical

Typical VSWR

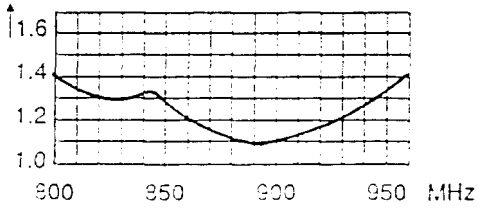

Gain (over λ/2-Dipole)

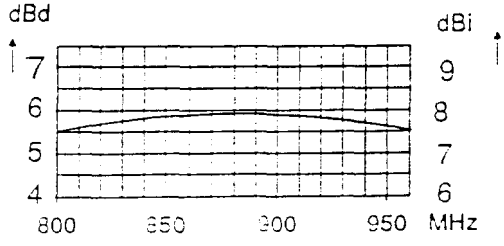

Exhibit 3

I. EXECUTIVE SUMMARY

1.1 General Information

The SmartCELL™ is a Microcell System designed to provide improved Cellular Radio service to areas not covered adequately by existing cellular technology. The SmartCELL™ Microcell System will also provide service to areas with dense user population. The System is also designed to provide these services with a much lower infrastructure cost than conventional Cellular Radio Systems. The SmartCELL™ Microcell System makes extensive use of components developed for small cellular mobile equipment to provide a compact, cost effective response to the recognized need for microcell based Personal Communications Services (PCS).

1.2 General System Operational Description

The SmartCELL™ Microcell System uses Cellular Compatible Mobile Station Radio Transceiver Subsystems to communicate with the radio equipment in the existing cell sites and Cellular Compatible Base Station Transceiver Subsystems in the microcell sites to communicate with portable units within the Microcell coverage area. The transceiver subsystem is interconnected over four wire voice grade facilities through Cell Site Controller Subsystems at the existing Mobile Cell Site and the microcell site respectively.(see Figure 1.1). The use of frequency agile transceivers at each end of the system allows the use of the same control or voice channels that are used at the mobile cell site or of different channels if required by interference or other considerations. It is expected that the voice channels used for microcell service will not be broadcast at the mobile cellular cell site and that the control channel used at the microcell site will be different (offset) than the one used at the cellular cell site. Scanning receiver(s) at the microcell transceiver locations will be used to detect potential interference between the Mobile Cellular and Microcell Systems (foreign carrier detect). Inter-Microcell handoff is being developed for a future compatible add-on release.

The Microcell Common Controller Subsystem can interconnect with both the Microcell Channel Equipment and the Cell Site Channel Equipment by four wire voice grade circuits (metallic or non-metallic). The Mobile Cell Site Transceiver Subsystems can interface with the radio equipment in the existing Cell