Sites either over the air or by direct connections. The various components of the SmartCELL™ Microcell System can be placed in such a manner that the interconnection and operating costs are minimized.

1.3 Compatibility with Existing Equipment

The SmartCELL™ Microcell System is designed to be compatible with existing network hardware and software. The SmartCELL™ Microcell System can also take advantage of the investment in existing cellular infrastructure by using idle capacity in existing Cell Sites to provide service to areas with poor coverage or beyond the current coverage area. The use of widely available four wire voice grade facilities for all interconnections and the compact size of the equipment allows the rapid deployment of Microcell services. The SmartCELL™ Microcell System is capable of operating with existing mobile cellular with appropriate adjustments for channel assignment differences.

1.4 System Capacity and Physical Size

The SmartCELL™ Microcell System can support up to 64 single channel Base Stations with one Cell site Common Controller Subsystem. The required Microcell site based equipment consists of one Microcell Common Controller and from one (1) to sixty-four (64) Microcell Radio Voice Channel Transceivers. The Control Subsystem for a maximum configuration is contained in a single cabinet. The cabinet can be floor or wall mounted and is approximately 22 inches wide, 20 inches tall and 22 inches deep. This cabinet contains all control and switching equipment and power for all directly (metallically) connected to Transceivers or those housed in the Control Unit Cabinet. The Transceivers are contained in an enclosure approximately 20 inches tall 22 inches wide and 5 inches thick. The Transceivers and antennas are contained in a plastic enclosure which can be surfaced mounted on interior walls. They can also be mounted directly in the Control Unit Cabinet. Weatherproof housings and flush mount enclosures are supplied as an option. Optional 115 VAC power supplies are available. Equipment Primary power is 24 VDC. Battery backup is available as an additional option.

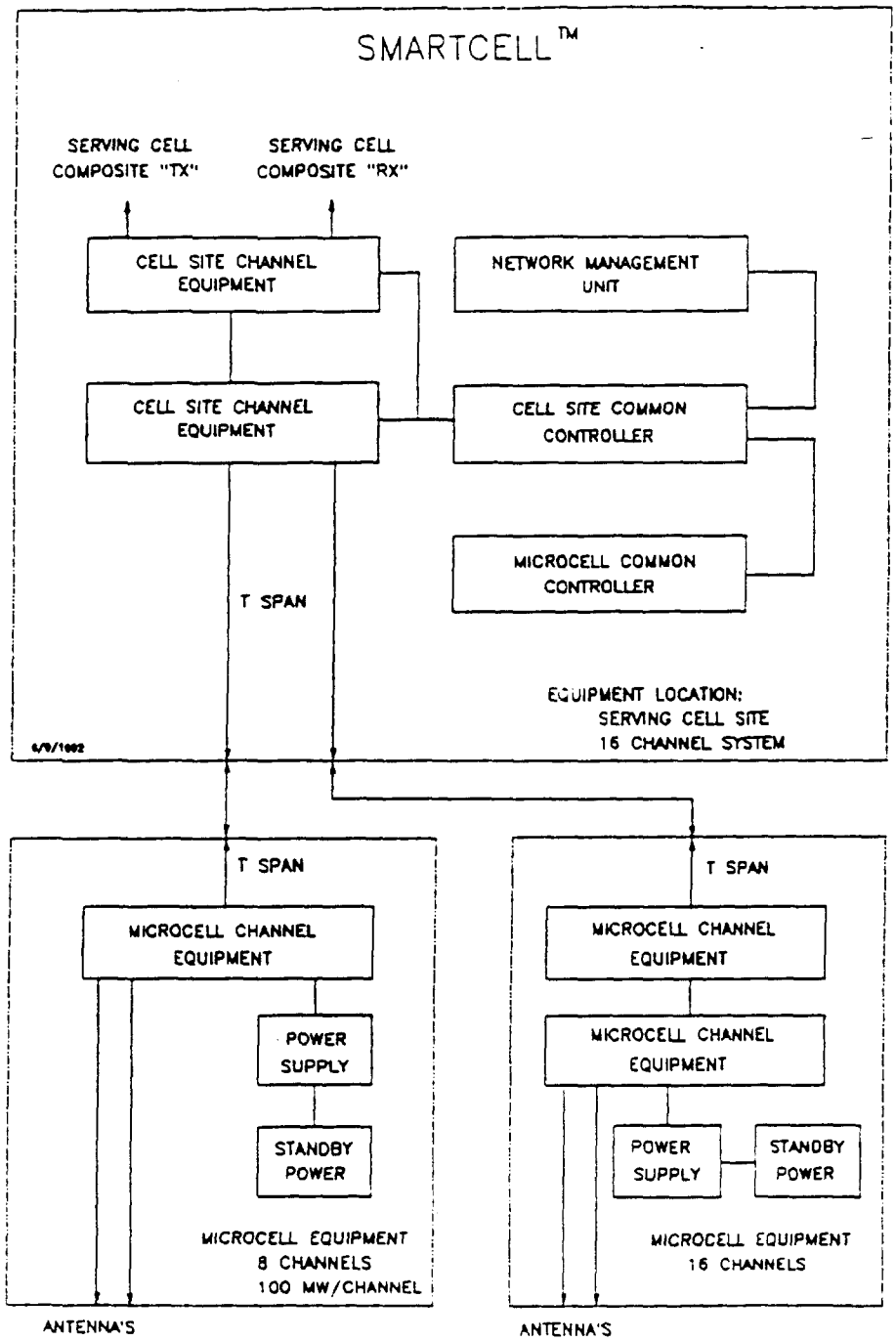

FIGURE 10. EXAMPLE OF SYSTEM EQUIPMENT LAYOUT

5.10

VI TECHNICAL SPECIFICATION

6.1 Electrical Specifications

6.1.1 Cell Site Channel Equipment Unit

TRANSMITTERS

ITEM	SPECIFICATION
Frequency Range	824.040 MHZ to 848.970 MHZ
Frequency Stability	±0.24 PPM
RF Output Power	-40 dBm to -95 dBm (2 dB increments)
RF Power Transition Time	<20 ms
RF Output Power Tolerance	±1 dBM
Channel Switching Time	20 ms Adjacent Channel 40 ms Other Channels
Carrier Inhibit Time	<2 ms
Carrier On-Off Time	<2 ms
Modulation Deviation Limiting	<±12.0 kHz
Modulation Noise & Distortion	<-26 dB
Harmonic & Spurious Emission	<-41
SAT Frequency Deviation	2.0 kHz ±10%

RECEIVERS

ITEM	SPECIFICATION
Frequency Range	869.040 MHZ to 893.970 MHZ
Channel Switching Time	<20 ms Adjacent Channel <40 ms Other Channel
RF Sensitivity	-120 dBm
RF Signal Level Measurement	-120 dBm to -30 dBm in 1 dB steps ±1 dBm
Intermodulation Response	>65 dB
Hum and Noise	<-32 dB
Distortion	-26 db
Spurious Response	<60 dB
Selectivity 6 dB 65 dB	<+18.2 kHz >-18.2 kHz >+40 kHz <-40.0 kHz

VI TECHNICAL SPECIFICATION

6.1 Electrical Specifications

6.1.1 Cell Site Channel Equipment Unit

TRANSMITTERS

ITEM	SPECIFICATION
Frequency Range	824.040 MHZ to 848.970 MHZ
Frequency Stability	±0.24 PPM
RF Output Power	-40 dBm to -95 dBm (2 dB increments)
RF Power Transition Time	<20 ms
RF Output Power Tolerance	±1 dBM
Channel Switching Time	20 ms Adjacent Channel 40 ms Other Channels
Carrier Inhibit Time	<2 ms
Carrier On-Off Time	<2 ms
Modulation Deviation Limiting	<±12.0 kHz
Modulation Noise & Distortion	<-26 dB
Harmonic & Spurious Emission	<-41
SAT Frequency Deviation	2.0 kHz ±10%

RECEIVERS

ITEM	SPECIFICATION
Frequency Range	869.040 MHZ to 893.970 MHZ
Channel Switching Time	<20 ms Adjacent Channel <40 ms Other Channel
RF Sensitivity	-120 dBm
RF Signal Level Measurement	-120 dBm to -30 dBm in 1 dB steps ±1 dBm
Intermodulation Response	>65 dB
Hum and Noise	<-32 dB
Distortion	-26 db
Spurious Response	<60 dB
Selectivity 6 dB 65 dB	<+18.2 kHz >-18.2 kHz >+40 kHz <-40.0 kHz

6.1.2 Microcell Channel Equipment

TRANSMITTERS

ITEM	SPECIFICATION
Frequency Range	869.040 MHZ to 893.970 MHZ
Frequency Stability	±0.24 PPM
RF Output Power	+20 dBm to -30 dBm (2 dB increments)
RF Power Transition Time	<20 ms
RF Output Power Tolerance	±1 dBM
Channel Switching Time	20 ms Adjacent Channel 40 ms Other Channels
Carrier Inhibit Time	<2 ms
Carrier On-Off Time	<2 ms
Modulation Deviation Limiting	<±12.0 kHz
Modulation Noise & Distortion	<-26 dB
Harmonic & Spurious Emission	<-41
SAT Frequency Deviation	2.0 kHz ±10%

RECEIVERS

ITEM	SPECIFICATION
Frequency Range	824.040 MHZ to 848.970 MHZ
Channel Switching Time	<20 ms Adjacent Channel <40 ms Other Channel
RF Sensitivity	-120 dBm
RF Signal Level Measurement	-120 dBm to -30 dBm in 1 dB steps ±1 dBm
Intermodulation Response	>65 dB
Hum and Noise	<-32 dB
Distortion	-26 db
Spurious Response	<60 dB
Selectivity 6 dB 65 dB	<+18.2 kHz >-18.2 kHz >+40 kHz <-40.0 kHz

6.2 POWER REQUIREMENTS AND PHYSICAL SIZE

MICROCELL CHANNEL EQUIPMENT UNIT, fully loaded.

PRIMARY POWER	24 VDC @ 10.5 AMPS
DIMENSIONS HxWxD Inches	3.5 x 19 x 14.5
WEIGHT, lbs.	34

Power consumption by card assembly.

T1	7 watts
Codec	3 watts
Adpcm/codec	3 watts
Base Station Controller	4 watts
Transceiver module	23 watts

CELL SITE CHANNEL EQUIPMENT UNIT, fully loaded.

PRIMARY POWER	24 VDC @ 8 AMPS
DIMENSIONS HxWxD Inches	3.5 x 19 x 14.5
WEIGHT, lbs.	34

CELL SITE COMMON CONTROLLER

PRIMARY POWER	24 VDC @ 1.5 AMPS
DIMENSIONS HxWxD Inches	3.5 x 19 x 23
WEIGHT, lbs.	35

MICROCELL COMMON CONTROLLER

PRIMARY POWER	24 VDC @ 1.5 AMPS
DIMENSIONS HxWxD Inches	3.5 x 19 x 23
WEIGHT, lbs.	35

MICROCELL NETWORK MANAGEMENT UNIT

PRIMARY POWER	24 VDC @ 10.5 AMPS
DIMENSIONS HxWxD Inches	7 x 19 x 18
WEIGHT, lbs.	36

6.3 MICROCELL CHANNEL EQUIPMENT UNIT ELECTRICAL SPECIFICATIONS

ELECTRICAL SPECIFICATIONS OF ASSEMBLY;

PRIMARY POWER	24 VDC @ 10.5 AMPS
RF SECTION	
OUTPUT POWER/CHANNEL (dBm)	
maximum	+20
minimum	-30
RECEIVER SENSITIVITY (dBm)	-105
RX SENSITIVITY W/LNA (dBm)	-120
CHANNEL CAPACITY, PER FRAME	8
T1 CARD	
T1 INTERFACE	DSX-1 OR CSU
E1 INTERFACE	CCITT, G703/704
LINE CODING	B8ZS
FRAME FORMAT	SF OR ESF
LINE RATE T1	1.544 MBPS
E1	2.048 MBPS
56 KBPS INTERFACE	V.35, V.11, DSU
64 KBPS INTERFACE	V.35, V.11, DSU
POWER CONSUMPTION	7 WATTS
CLOCK SOURCE	INTERNAL, EXTERNAL, DERIVED

Exhibit 4

EFFICIENCY OF A NEW MICROCELL SYSTEM

the

by

W. C. Y. LEE
PacTel Corporation
Walnut Creek, California

I. Introduction

A conventional Microcell uses the cell splitting technique to reduce the size of the cell in order to increase the capacity. In general, when the new cell radius is one half of the old cell radius, the old cell can fit four new small cells. Each small cell would carry the same capacity as the old cell. Then the same areas of the old cell can increase the capacity four times that of the old one. This increases the system capacity. The measured system capacity is the number of channels per square miles or square kilometers. However, when the cell becomes small, the four times of capacity increase will not be observed. This is due to the fact that the interference is harder to control in small cells then in larger cells. When a cell radius is less than 1 kilometer, the cell splitting may only increase system capacity by two times. The radius capacity, m, is defined as the number of cahnnels per cell expressed as follows:

$$m = \frac{M}{K} \qquad \text{number of channels / cell}$$

where M is the total channels and K is the frequency reuse factor. m is inversely proportional to K. m is a fixed number depending on which specified radio equipment is deployed in the cellular system. The size reduction of a cell does not change the radio capacity. In today's analog cellular system, an accepted voice quality has to be maintained by engineering the frequency reuse factor K = 7, i.e., the co-channel cell separation D = 4.6R, or the carrier-to-interference ratio, C/I, $(C/I)_i$ = 18 dB. In this paper a new Microcell system[1] can be implemented for increasing not only system capacity but also radio capacity.

II. A New Microcell System Design

A Microcell is divided into three (can be more than three) submicrocells which are also called zones. In each zone there is a zone site at which the antenna and the radios are installed. The zone site can be located at the center of each zone (see Fig. 1) or at one edge of each zone (see Fig. 2). When a vehicle is at one of the three zones, all three zones receivers receive the signal strengths from the vehicle transmitter. After comparing the signal strengths, the zone transmitter which site receives the strongest strength is turned on to serve the mobile. When the vehicle is moving to another zone, the new zone transmitter is turned on and the old zone transmitter is turned off. The same frequency is used by the vehicle. Therefore, no handoff action is taken by the MTSO. There is only one zone transmitter turned on but all three zone receivers are turned on for any one frequency which is associated with a vehicle. A Microcell may handle 60 frequencies assigned to 60 vehicles. In average, each zone may handle 20 mobile calls associated with 20 frequencies.

III. Efficiency of the New Microcell System

The new Microcell System can be implemented in three different approaches.

A. Selective Omni-zone Approach

We may place a zone site at the center of each zone as shown in Fig. 1. The transmit power of each zone site would be center excited. In this case, we can

calculate the C/I ratio from the new system shown in Fig. 3. The separation D_1 of any two nearest co-channel zones (worst case scenario) in two corresponding microcells is $4.6R_1$. Where R_1 is the zone radius, this separation proves the voice quality of the new Microcell is better than that of the regular analog system. The C/I ratio of a worst case scenario is also calculated. In this scenario, the co-channel vehicles operate in their zones of corresponding cells are within the circle shown in Fig. 3. The interfering zones are identified by A-zones and three B-zones. The serving zone is in the center cell and is indicated by R_1. Then

$$C/I = \frac{R_1^{-4}}{\sum_{i=1}^{6} D_i^{-4}} = \frac{R_1^{-4}}{\underbrace{3(4.6R_1)^{-4}}_{A-zones} + \underbrace{3(5.75R_1)^{-4}}_{B-zones}} = 105\ (=)\ 20\,dB$$

indicates that even in a worst case scenario of this Microcell system, the C/I is 2 dB better than the regular analog system. Also in Fig. 3, we can show that the separation of co-channel cells is D = 3R where R is the cell radius. Since

$$K \triangleq \frac{(D/R)^2}{3} = 3$$

the new Microcell system proves the increase of radio capacity as K = 7 for a regular cell system to K = 3 for this microcell system which increases 7/3 or 2.33 times. K = 3 is the smallest number in a cellular system regardless of whether it is an analog or digital system except for a CDMA system in which K approaches one. This omni-zone approach provides a superior voice quality in the K = 3 system. However, it is costly to find three center locations of three zones. Also in reality, the control of the transmitted power in omni-zones is difficult. Therefore, the next approach is stated below.

B. Selected Edge-excited Zone Approach

In an edge excited zone approach, all the zone sites are moved from the center of the zones to the edges of the zones, and are also located on the perimeter of the cell boundary as shown in Fig. 2. The calculation of C/I in this edge-excited zone approach is based on the K = 3 configuration shown in Fig. 4. The center cell is the serving cell. One selected zone is serving the mobile call. The center of the cell is the weak spot for receiving the signal from the zone site. There are six interfering cells around the serving cell. Amongst the six interfering cells, three of which may have two zone sites in each cell to interfer with the mobile call in the center cell. The other three cells may have only one zone site in each cell to interfer with the mobile call. Since only one zone site is turned on at a time in a cell on any one frequency, the probability of interfering with the mobile call from each interfering zone site is one third. The distance from each interfering zone site to the vehicle can be obtained from Fig. 4. Three interfering cells, each of which has two C-zones which may interfer with the mobile call. However, the probability is only two-thirds. The probability that the remaining three interfering cells, each having one D-zone which may interfer with the mobile call is one-third. The C/I ratio is obtained at the vehicle from six co-channel cells (denoted "1") as

$$C/I = \frac{R^{-4}}{\underbrace{3\left[\frac{2}{3}(3.6R)^{-4}\right]}_{C-zones} + \underbrace{3\left[\frac{1}{3}(4R)^{-4}\right]}_{D-zones}}$$

$$= 63\ (=)\ 18\,dB$$

In this edge-excited zone approach, the C/I can still be maintained at 18 dB which is the level for acceptable voice quality. Of course, the K = 3 configuration shown in Fig. 4 proves the increase of radio capacity. As we know, the omni-zone approach still provides the best voice quality. There is another approach stated in the following section.

C. Non-Selective Edge-excited Approach

There are situations when all the zones have to be turned on. We call this a non-selective edge-excited zone configuration. In a non-selective edge-excited zone configuration, all the cells are treated as omni-cells because all zones sites are transmitting concurrently. In an analog system, the regular center-excited omni-cells require the co-channel interference reduction factor q which is equivalent to q = D/R = 4.6 as mentioned previously.

In edge-excited zone cells, the D_1/R_1 has to be 4.6 in order to maintain the voice quality. Where D_1 is the channel zone separation and R_1 is the distance from the zone transmitter to the zone boundary, R_1 is also equal to the cell radius. Then new q ($q = D/R_1$) becomes 3.6 as shown in Fig. 5. Then the frequency reuse factor K becomes

$$K = \frac{(q)^2}{3} = \frac{(3.6)^2}{3} = 4.32 \approx 4$$

which proves that the edge-excited approach can increase the radio capacity by 7/4 = 1.75 times.

IV. Summary

The radio capacity can be increased by 2.33 times if a selective zone approach is used. The radio capacity can be increased by 1.75 times if a non-selective zone appraoch is used. The efficiency of using this Microcell configuration reaches a maximum because K = 3 is the smallest number in a frequency reuse system. When applying the analog system with a non-selective zone configuration, the radio capacity can be increased by 1.75 times. When applying microcells to CDMA systems, the non-selective-zone configuration can be used to further reduce the interference. The attributes of Microcell have been stated in Referene 4.

References

1. W. C. Y. Lee "Cellular Telephone System," U.S. Patent 4,937,049.

2. W. C. Y. Lee "Microcell Telephone System," U.S. Patent, Microcell System for Cellular Telephone Systems, 5067147, November 19, 1991.

3. W. C. Y. Lee "Mobile Cellular Telecommunications Systems," McGraw Hill, 1989, p. 57, p. 379.

4. W. C. Y. Lee "Microcell Architecture," IEEE Communications Magazine, November 1991, pp. 19-23.

Figure 1 Microcell Omni-zone Configuration

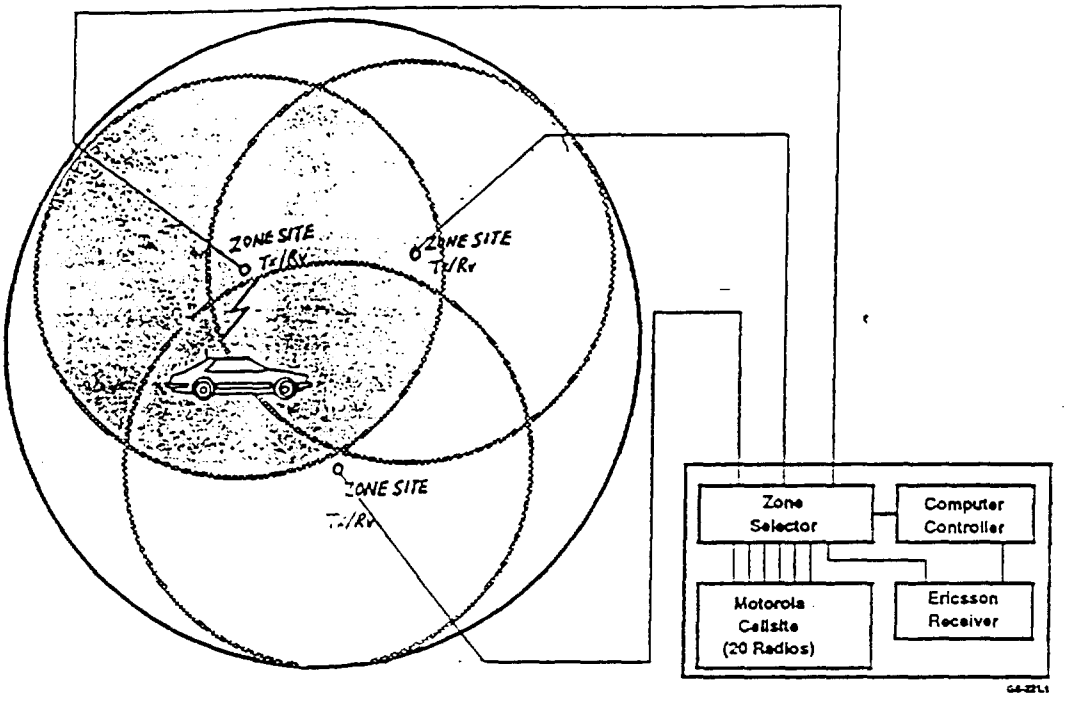

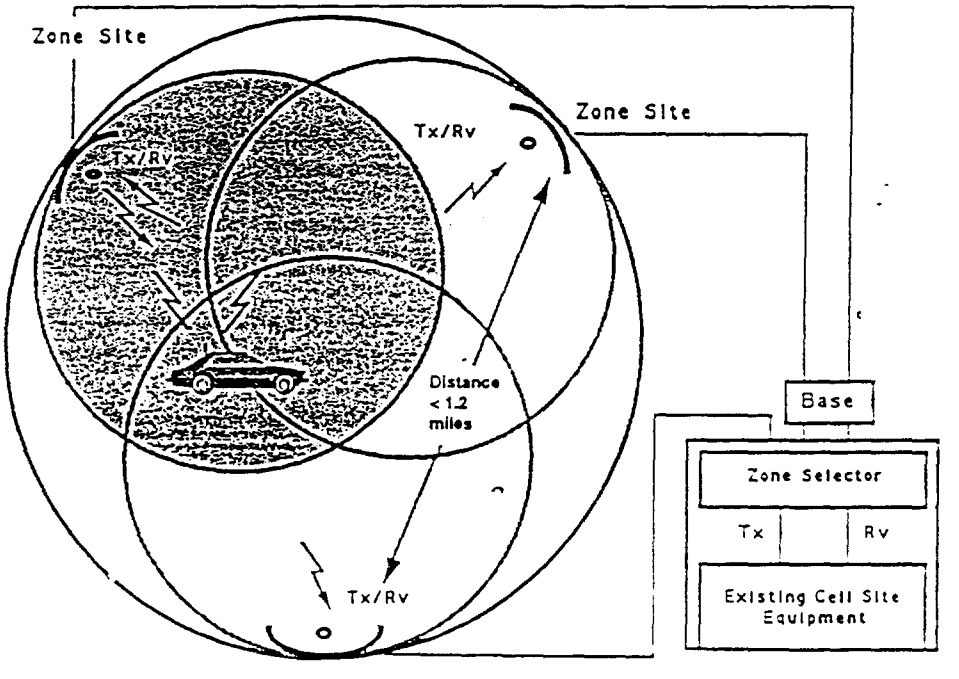

Figure 2 Microcell Edge-excited Zone Configuration

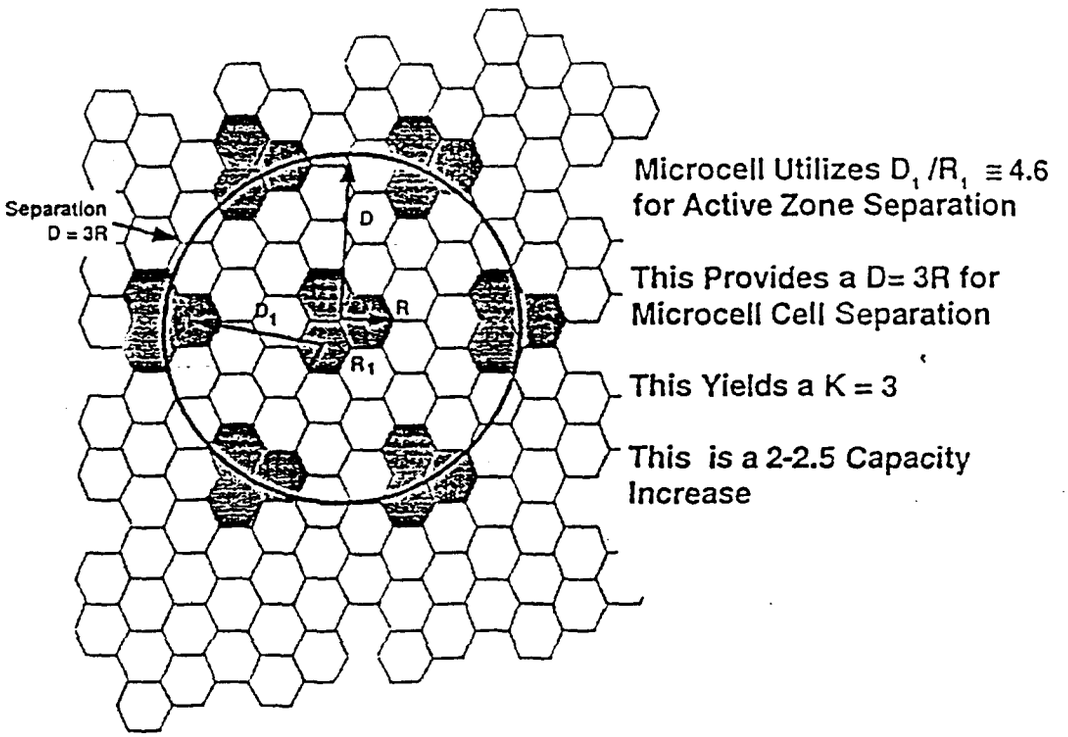

Figure 3 Microcell Application

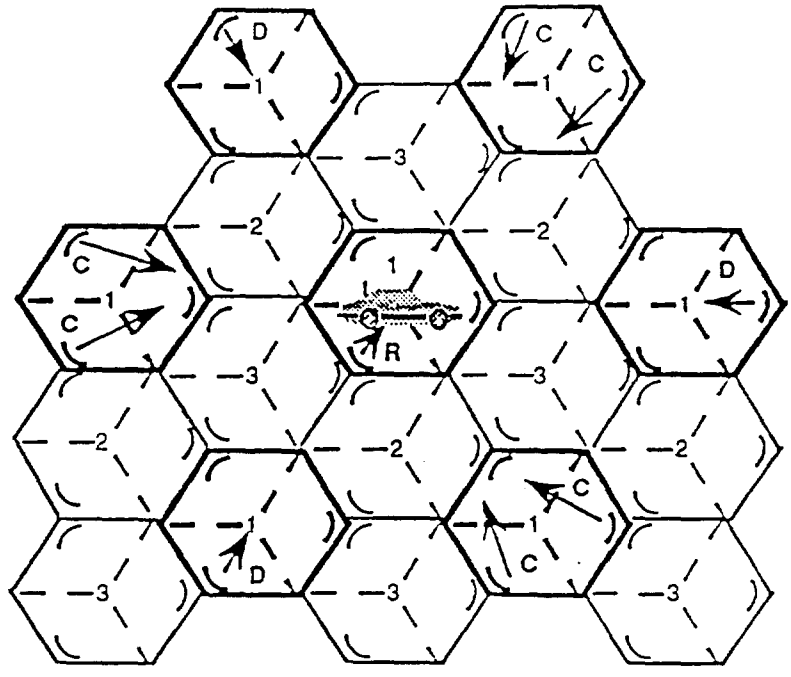

Fig 4 Configuration of the selective edge-excited zone cells

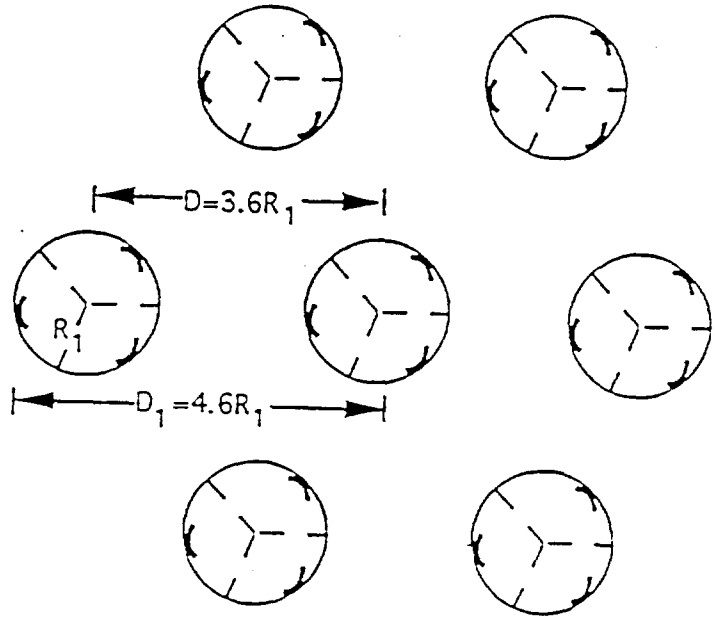

Fig 5 The configuration of the non-selective zone cells

Exhibit 5

Transmission Loss Over Smooth Earth

(at 30, 300 and 3,000 MHz; half-wave dipoles at 250 and 30 ft.)

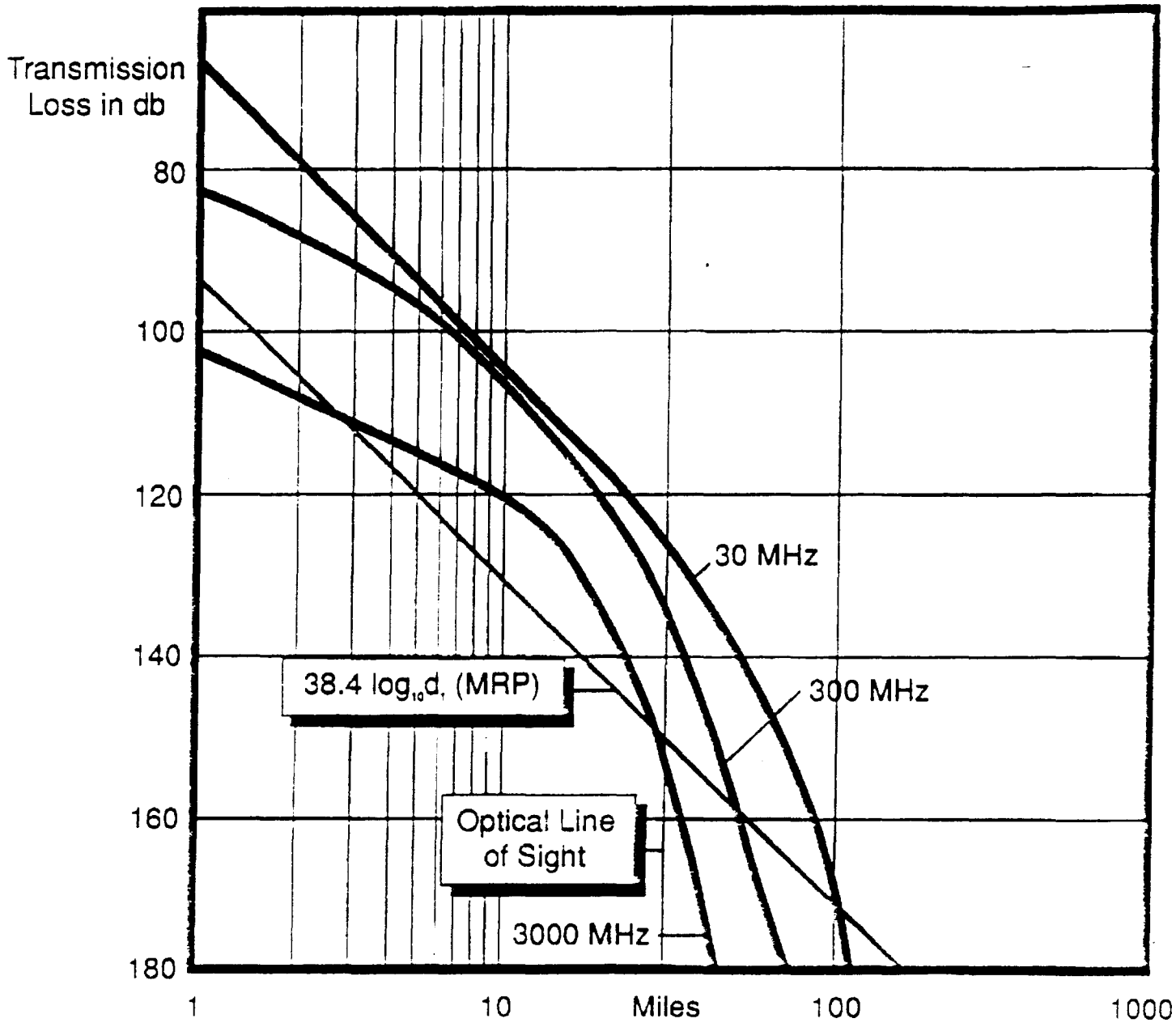

Bullington, K., Radio Propagation for Vehicular Communications. IEEE Trans. on Veh. Tech. Vol. VT-26, No. 4, November 1977, p. 307.

Exhibit 6

MOTOROLA

SILVERLINK 2000

Personal Telephone CT2/CAI Compatible

The Personal Communications Gateway

CT2...the new, advanced second generation digital cordless telephony. Bringing a family of products that provides freedom in communications, CT2 technology offers the user superior audio quality, a more secure means of communications, and, for the first time, a personal cordless telephone system capable of multiple environment use.

In today's highly mobile society, personal communications are a must. Personal means pocketable. And Motorola delivers the pocketable **SILVERLINK 2000** ...a small, light yet durable personal cordless telephone.

KEY FEATURES

- Pocket Size
- CAI Compatible
- Access Up To 4 Service Providers
- Access Up To 8 Personal Bases
- Memory Storage and Dialing
- Last Number Redial
- Adjustable Ringer Volume
- Adjustable Speaker Volume
- Keypad Lock
- Choice of Primary or Rechargeable Battery

SILVERLINK Telepoint Base Station

Performance Specifications – All specifications comply with CAI (MPT1375) and all standards therein.

GENERAL

MODELS:	S35XGB1202AP 2 LINE W/ INTERNAL COMBINERS	S35XGB1402AP 4 LINE W/ INTERNAL COMBINERS	S35XGB1602AP 6 LINE W/ INTERNAL COMBINERS	S35XGB1200AP 2 LINE W/O INTERNAL COMBINERS	S35XGB1400AP 4 LINE W/O INTERNAL COMBINERS	S35XGB1600AP 6 LINE W/O INTERNAL COMBINERS
Dimensions:	57.6 cmH x 39.4cmW x 28.7cmD 22.7"H x 15.5"W x 11.3"D					
Weight:	25 lbs (2 line, no battery) 27.5 lbs (4 line, no battery) 30 lbs (6 line, no battery) 9 lbs additional for battery			11.3 Kg (2 line, no battery) 12.4 Kg (4 line, no battery) 13.6 Kg (6 line, no battery) 4 Kg additional for optional battery		
Standard Operating Temperature:	0° to 60°C					
Rain Intrusion:	MIL-STD 810C/D (Procedure 1)					
Color:	One standard color, light grey					
Digital Speech Coding Type:	Adaptive Differential Pulse Code Modulation (ADPCM)					
Channel Bit Rate:	72 KBPS					
Data Rate Stability:	50 ppm Reference 72 KBPS					
Speech Bit Rate:	32 KBPS					
Signaling Channel Rate:	1 or 2 KBPS					
Modem Speeds:	1200 Baud Standard, 2400 Baud optional.					
Power Consumption with 6 transceivers:	60 Watts					
Input Voltage:	110/230 VAC, 50-60 Hz					
Memory Size:	10,000 Subscribers minimum per 2 lines. Expandable. 600 call details minimum per 2 lines. Expandable.					
Special List Sizes: (new lists, zap lists, hot lists, etc.)	10,000 subscribers minimum. Expandable.					

RF SYSTEM PARAMETERS

Frequency Band:	864.1-868.1 MHZ
Channel Spacing:	100 kHz
Total Channel Capability:	40
Duplex Method:	Time Division Duplex (TDD) (Transmit and Receive on same frequency)
Transmit/Receive Period:	1/1 millisecond
Modulation:	Binary FSK
Maximum Simultaneous Conversations per base:	6

TRANSMITTER

RF Output power:	10 mW maximum (adjustable)
Output Impedance:	50 Ohms
Frequency Tolerance:	+/- 10 kHz
Peak Frequency Deviation:	19.8 kHz (+/- 5.4 kHz)
Adjacent Channel Power:	Not exceeding 10 uW at 100 kHz from nominal operating frequency in 80 kHz bandwidth
Spurious Emissions:	Not exceeding 4 nW at frequencies: 41-68, 87.5-118, 162-230 and 470-862 MHz Not exceeding 250 nW at all other frequencies < 1 GHz Not exceeding 1 uW at freauencies > 1 GHz
Intermodulation:	Less than 4 nW ERP (10 kHz bandwidth)

RECEIVER

Sensitivity (.001 BER):	40 dB uV/m typical
Spurious & Image Rejection:	Per CAI MPT 1375
Intermodulation:	-40 dB (at Reference 45 db uV/m)

TELEPHONE INTERFACE CHARACTERISTICS

Audio Distortion:	Less than 5% 300-3000 Hz + 1 dB, -3dB
Audio Frequency Response:	Better than 35 dB
Audio Signal to Noise Ratio:	Better than 60 dB (300-1000 Hz)
Input Longitudinal Balance:	Better than 65 dB (1000-3400 Hz)

NATIONAL MOTOROLA Communications SERVICE

Support Services
Wherever Motorola sells, our product is backed by service. In the U.S., we have 900 authorized or company-owned centers. In addition, our products are serviced throughout the world by a wide network of company or authorized independent distributor service organizations.

Winner 1988 Malcolm Baldrige National Quality Award

MOTOROLA
1301 E. Algonquin Rd., Schaumburg, Illinois 60196

Specifications subject to change without notice. Ⓜ, and Motorola are registered trademarks of Motorola, Inc. SILVERLINK is a trademark of Motorola, Inc. © 1990 Motorola, Inc. Printed in USA (9010) CP. Produced by Marketing Services

Motorola, Inc. is an Equal Employment Opportunity/Affirmative Action Employer.

SILVERLINK 2000 Personal Telephone

Performance Specifications – All specifications comply with CAI (MPT1375) and all standards therein.

GENERAL

Model:	S35XCD1000AA
Dimensions:	2.20 x 5.91 x .95 inches (5.58 x 15.01 x 2.41 cm)
Volume:	8.5 cubic inches (136 cubic cm)
Weight:	6.58 ounces (186.5 grams) with AAAs, 7.14 ounces (200 grams) with Ni-Cd
Operating Temperature:	-20° to +60° C (-4° F to 140° F)
Digital Speech Coding Type:	Adaptive Differential Pulse Code Modulation (ADPCM)
Channel Bit Rate:	72 kbit/s
Data Rate Stability:	100 ppm Reference 72 kbit/s
Speech Bit Rate:	32 kbit/s
Power Requirements:	Three AAA alkaline batteries (1.5 V each cell) One Nickel Cadmium rechargeable battery pack (optional)
Battery life:	Alkaline: 6 hrs. continuous talk time / 40 hrs. continuous standby time Nickel Cadmium: 3 hrs. continuous talk time / 24 hrs. continuous standby time

RF SYSTEM PARAMETERS

Frequency Band:	864.1-868.1 MHz
Channel Spacing:	100 kHz
Total Channel Capability:	40
Duplex Method:	Time Division Duplex (TDD) (Transmit and Receive on same frequency)
Transmit/Receive Period:	1/1 millisecond
Modulation:	Binary FSK

TRANSMITTER

RF Output power:	10 mW ERP maximum
Frequency Tolerance:	+/- 10 kHz
Peak Frequency Deviation:	19.8 kHz (+/- 5.4 kHz)
Adjacent Channel Power:	Not exceeding 10 uW at 100 kHz from nominal operating frequency in 80 kHz bandwidth
Spurious Emissions:	Not exceeding 4 nW at frequencies: 41-68, 87.5-118, 162-230 and 470-862 MHz Not exceeding 250 nW at all other frequencies < 1 GHz Not exceeding 1 uW at frequencies > 1 GHz

RECEIVER

Sensitivity (.001 BER):	40 dB uV/m typical
Spurious & Image Rejection:	Per CAI MPT1375
Intermodulation:	-40 dB (at Reference 45 dB uV/m)

BATTERY CHARGER

Input:	110, 120, 220, 240 VAC, 50-60 Hz
Output per Charging Pos.:	45 mA (nominal) telephone / 20 mA (nominal) cell pack
Size:	5.83 x 3.78 x 2.17 inches (14.8 x 9.6 x 5.5 cm)
Weight:	4.64 ounces (132 grams)

NATIONAL MOTOROLA Communications SERVICE

Support Services
Wherever Motorola sells, our product is backed by service. In the U.S., we have 900 authorized or company-owned centers. In addition, our products are serviced throughout the world by a wide network of company or authorized independent distributor service organizations.

Winner 1988 Malcolm Baldrige National Quality Award

MOTOROLA
1301 E. Algonquin Rd., Schaumburg, Illinois 60196

Specifications subject to change without notice. M, and Motorola are registered trademarks of Motorola, Inc. SILVERLINK is a trademark of Motorola, Inc. © 1990 Motorola, Inc. Printed in USA (9010) CP. Produced by Marketing Services.

Motorola, Inc. is an Equal Employment Opportunity/Affirmative Action Employer.

MOTOROLA

SILVERLINK 2010 and 2020

Personal Base Stations
CT2/CAI Compatible

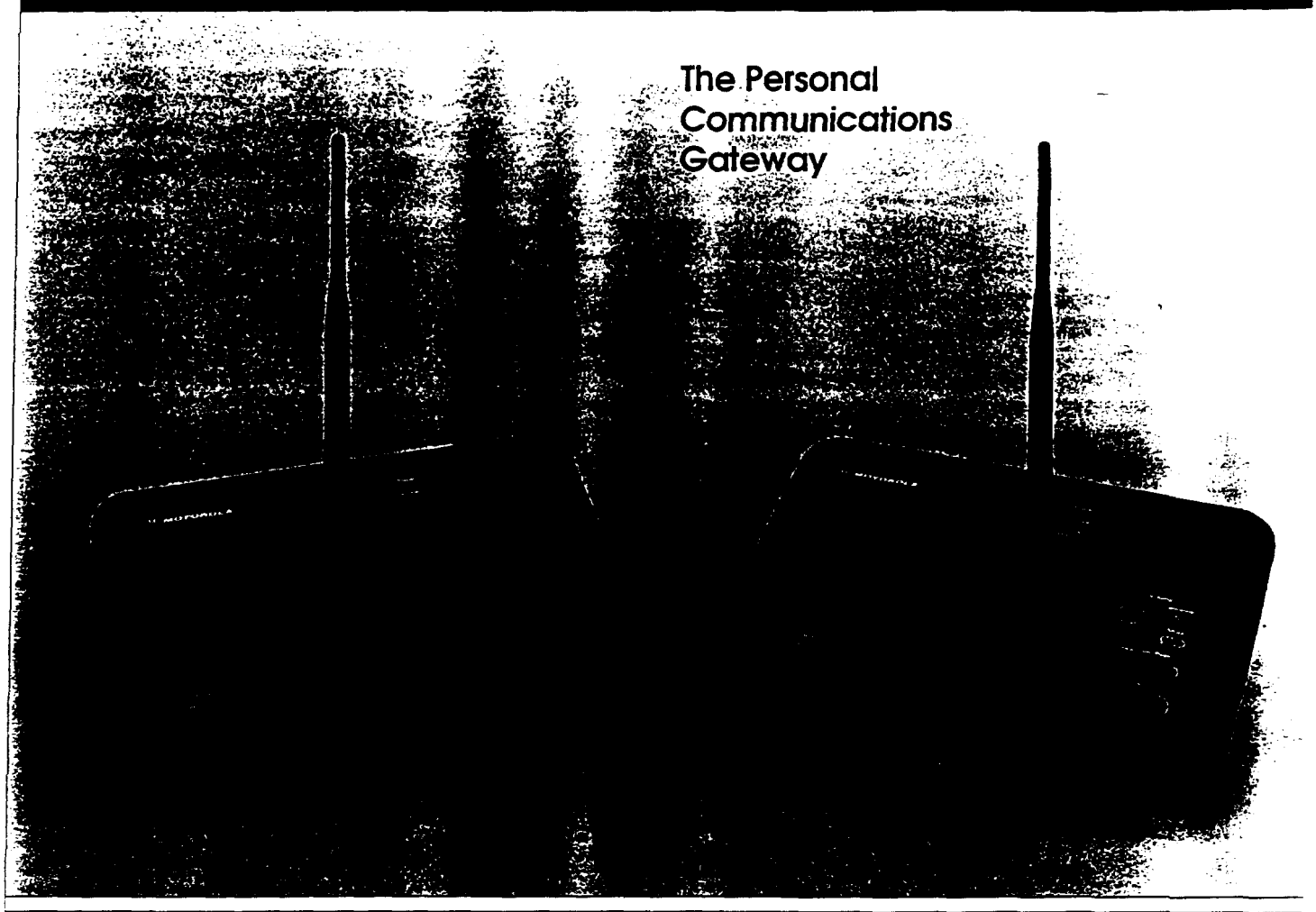

CT2...the new, advanced second generation digital cordless telephony. Bringing a family of products that provides freedom in communications, CT2 technology offers the user superior audio quality, a more secure means of communication, and, for the first time, a personal cordless telephone system capable of multiple environment use.

The **SILVERLINK** personal base stations allow the user to initiate and receive calls with any CAI compatible personal telephone. The personal base stations are stylish, designed for use in the home or office, and include the most desired telephone features. Motorola offers a family of personal base stations that gives the user flexibility in configuring their personal cordless communication system.

KEY FEATURES:

- CAI Compatible
- DTMF/LD Capable
- Single Line
- Outgoing Call Restriction
- Incoming Call Priority
- Secure Registration
- Multiple Registration (Up to 8 ID's)
- Programmable Dialing Parameters
- Back Up Battery Power Capability
- Intercom/Page **(SILVERLINK 2020)**
- Speaker Phone **(SILVERLINK 2020)**

SILVERLINK 2010 & 2020 PERSONAL BASE STATION

Performance Specifications – All specifications comply with CAI (MPT1375) and all standards therein.

GENERAL

Model:	S35XCC1100AP **(SILVERLINK 2010)**, S35XCC1107AP **(SILVERLINK 2020)**
Dimensions:	8.82 x 6.42 x 2.68 inches, (22.4 x 16.3 x 6.9 cm)
Weight:	28.67 ounces (814 grams)
Operating Temperature:	-20° to +60° C
Digital Speech Coding Type:	Adaptive Differential Pulse Code Modulation (ADPCM)
Channel Bit Rate:	72 KBPS
Data Rate Stability:	50 ppm Reference 72 KBPS
Speech Bit Rate:	32 KBPS
Voltage:	110, 120, 220, 240 VAC, 50-60 Hz
Back up battery:	6 AA Alkaline cells provide 8 hours continuous talk time/
(batteries not included)	24 hours standby time (without speaker phone activation)

RF SYSTEM PARAMETERS

Frequency Band:	864.1-868.1 MHz
Channel Spacing:	100 kHz
Total Channel Capability:	40
Duplex Method:	Time Division Duplex (TDD) (Transmit and Receive on same frequency)
Transmit/Receive Period:	1/1 millisecond
Modulation:	Binary FSK

TRANSMITTER

RF Output power:	10 mW maximum
Output Impedance:	50 Ohms
Frequency Tolerance:	+/- 10 kHz
Peak Frequency Deviation:	19.8 kHz (+/- 5.4 kHz)
Adjacent Channel Power:	Not exceeding 10 uW at 100 kHz from nominal operating frequency in 80 kHz bandwidth
Spurious Emissions:	Not exceeding 4 nW at frequencies: 41-68, 87.5-118, 162-230 and 470-862 MHz Not exceeding 250 nW at all other frequencies < 1 GHz Not exceeding 1 uW at frequencies > 1 GHz

RECEIVER

Sensitivity (.001 BER):	40 dB uV/m typical
Spurious & Image Rejection:	Per CAI MPT1375
Intermodulation:	-40 dB (at Reference 45 dB uV/m)

TELEPHONE INTERFACE CHARACTERISTICS

Audio Distortion:	Less than 5%
Audio Frequency Response:	300-3000 Hz, +1 dB, -3 dB
Audio Signal-to-noise ratio:	Better than 35 dB
Input Longitudinal Balance:	Better than 60 dB (300-1000 Hz), Better than 65 dB (1000-3400 Hz)

NATIONAL MOTOROLA Communications SERVICE

Support Services
Wherever Motorola sells, our product is backed by service. In the U.S., we have 900 authorized or company-owned centers. In addition, our products are serviced throughout the world by a wide network of company or authorized independent distributor service organizations.

Winner 1988 National Quality Award

MOTOROLA
1301 E. Algonquin Rd., Schaumburg, Illinois 60196
Specifications subject to change without notice.
Ⓜ, and Motorola are registered trademarks of Motorola, Inc. SILVERLINK is a trademark of Motorola, Inc. © 1990 Motorola, Inc. Printed in USA (9010) CP. Produced by Marketing Services

Motorola, Inc. is an Equal Employment Opportunity/Affirmative Action Employer.

MOTOROLA

SILVERLINK

Telepoint Base Station
CT2/CAI Compatible

CT2...the new, advanced second generation digital cordless telephony. Bringing a new family of products that provides freedom in communications, CT2 technology offers the user superior audio quality, a more secure means of communications, and a personal cordless telephone capable of multiple environment use.

The public base station connects to the PSTN and provides subscribers with a low cost telephony service. Motorola's base station is designed for maximum operator flexibility: expandable from two to six telephone lines, a cabinet for indoor and outdoor applications, a variety of antenna choices, and modular architecture.

KEY FEATURES:

- CAI Compatible
- 100% Continuous Duty Transmitter
- Excellent Speech Quality
- Time Division Duplex operation
- Microprocessor Control
- Expandable Database
- Modular Design
- Built-in Diagnostics
- Memory Protection
- Auto Download / Upload of Data
- Secure Algorithm Protection
- Indoor / Outdoor Design
- Secure Cabinet

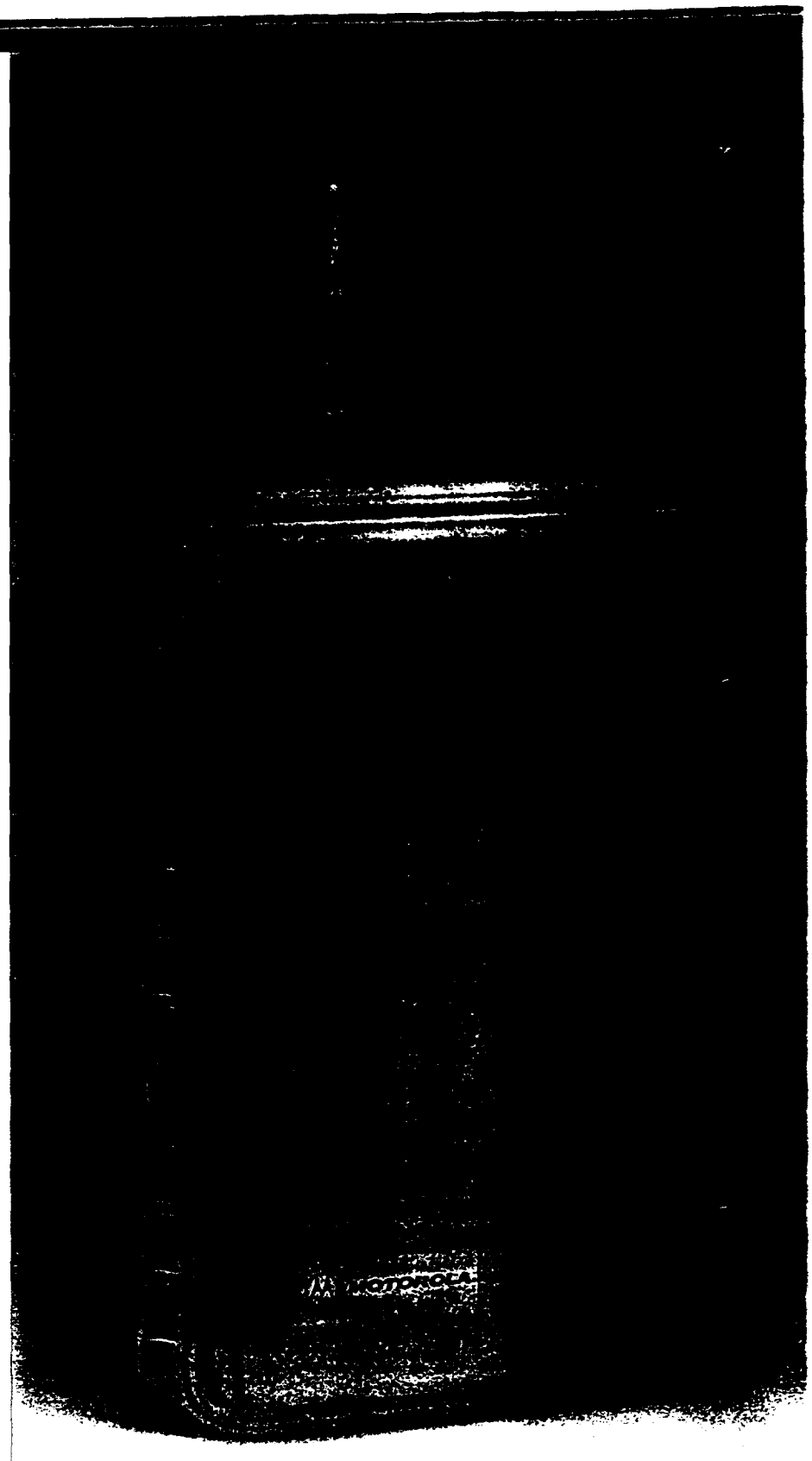

Exhibit 7

MicroFill™

Structure Specific Coverage

Decibel
Multi
Media
Microcell
Systems

WHERE COMMUNICATION TECHNOLOGIES MEET

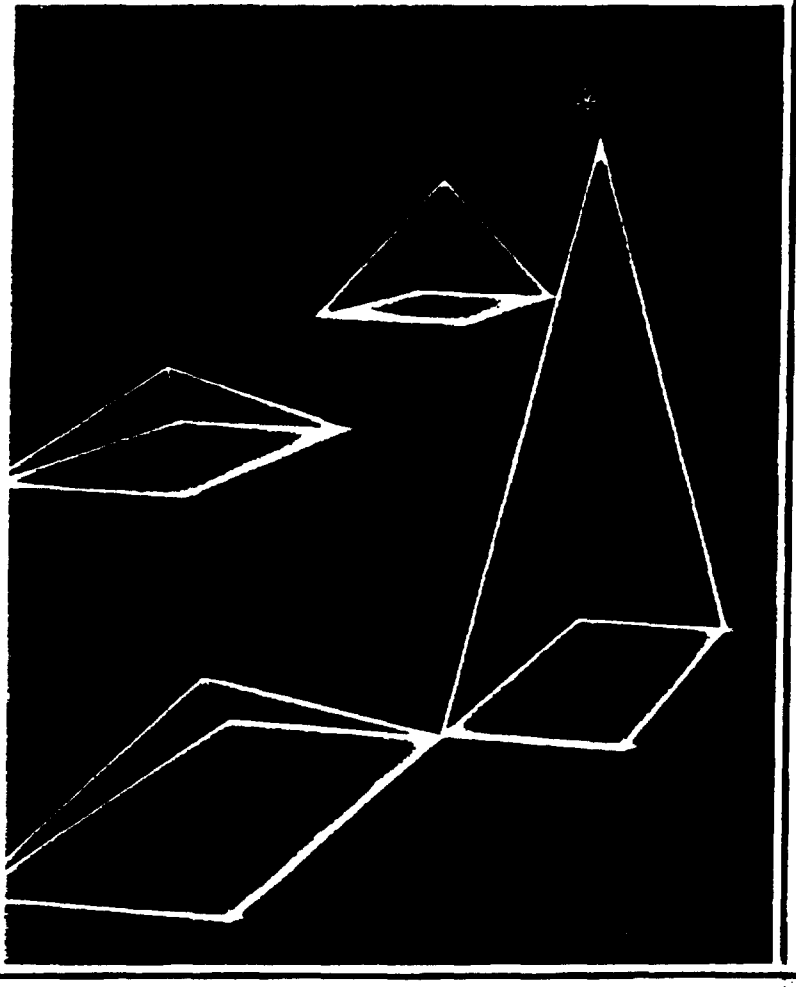

Improve In-Building Coverage And Add Cellular Subscribers.

Anyone who uses hand-held cellular phones understands the frustration of dropped calls and poor or scratchy voice quality. Equally annoying is the inability to make calls inside buildings, subway stations, pedestrian tunnels and other covered structures—particularly when these are often the very places from which calls need to be made.

Fortunately, there's a solution: MicroFill from Decibel Products, an RF distribution system specifically designed to provide basic service or microcellular coverage inside buildings, tunnels and other such structures.

Provide Clean, Clear Signals With Reduced Interference.

Currently, cellular coverage inside buildings and other structures is provided by radiating a signal from a nearby cell site that is strong enough to penetrate exterior walls and saturate the interior. Unfortunately, this power approach to in-building coverage often causes interference to other calls in the network. Such interference occurs because direct and reflected RF signals from the high-power site reduce the signal-to-interference ratio in cells which use the same frequencies. As a result, system capacity is limited and call quality lowered.

MicroFill, on the other hand, is designed to counter co-channel interference, thereby allowing system operators to provide the higher quality of service today's cellular customers demand. MicroFill uses state-of-the-art amplifiers, 75 ohm coaxial cable and specially designed antennas to distribute precisely controlled RF signals throughout the desired area. The result is clear, clean communications with little or no interference to co-channel cells.

Cost Savings As Much As 75% With No Performance Loss.

The MicroFill system uses a 75 ohm coaxial cable distribution system. In many buildings, 75 ohm cables have been pre-installed for use with CATV and LANs. With 75 ohm cable, a cost savings of up to 75 percent over current 50 ohm cables of equal electrical specifications is possible. Since the amplifiers and the antennas are designed for 75 ohm impedance, no electrical performance is sacrificed.

By utilizing a distributed gain/radiation system, only the required amount of signal is radiated at various locations inside a structure to provide coverage. Buildings with no coverage can be provided with cellular service easily and cost effectively. Buildings already served by high-powered sites can continue to be served while power and interference are reduced.

In high-use environments, such as downtown office buildings, network capacity can be increased by "off loading" in-building users to a MicroFill system served by a dedicated cell. In conjunction with

Decibel's MicroLite™ Fiber Optic Microcell System, the dedicated cell can serve several buildings.

MicroFill Handles TDMA, CDMA And Narrow Band As Well As Analog.

The MicroFill system is designed to be transparent to the cell site. This ensures that the investment in Decibel equipment will continue to perform even if you change MTSO or base station suppliers. High linearity throughout the system ensures compatibility with TDMA, CDMA and N-AMPS as well as analog systems. This linear design supports both today's analog systems and tomorrow's digital modulation scheme.

MicroFill Installs Easily and Economically At Many Convenient Locations.

MicroFill's 75 ohm cables are designed for in-building distribution and are therefore easy to install. DC power is supplied to the in-line amplifiers through the coaxial cable. This further reduces the cost of installation, since in most cases an electrician is not required. The power source supplying the amplifiers is placed in an equipment closet and plugged into a standard electrical outlet. Uplink and downlink directional couplers provide easy setup and maintenance, as well as monitoring points in the system.

Omni and directional antennas are available to equalize coverage and signal strength. The antenna radomes are designed to be as inconspicuous as possible, looking no more objectionable than a smoke detector.

MicroFill is a member of Decibel Products' Multi Media Microcell Systems family. It is designed to work with other products including MicroLite, a fiber optic microcell system, the 16-Channel DB4416 Power Combiner, PrismPlus repeaters and a selection of specialized low-profile interior and exterior antennas. Together, these products provide cellular system engineers with the tools to meet the challenges of today's subscribers while building the foundation for future personal communications networks.

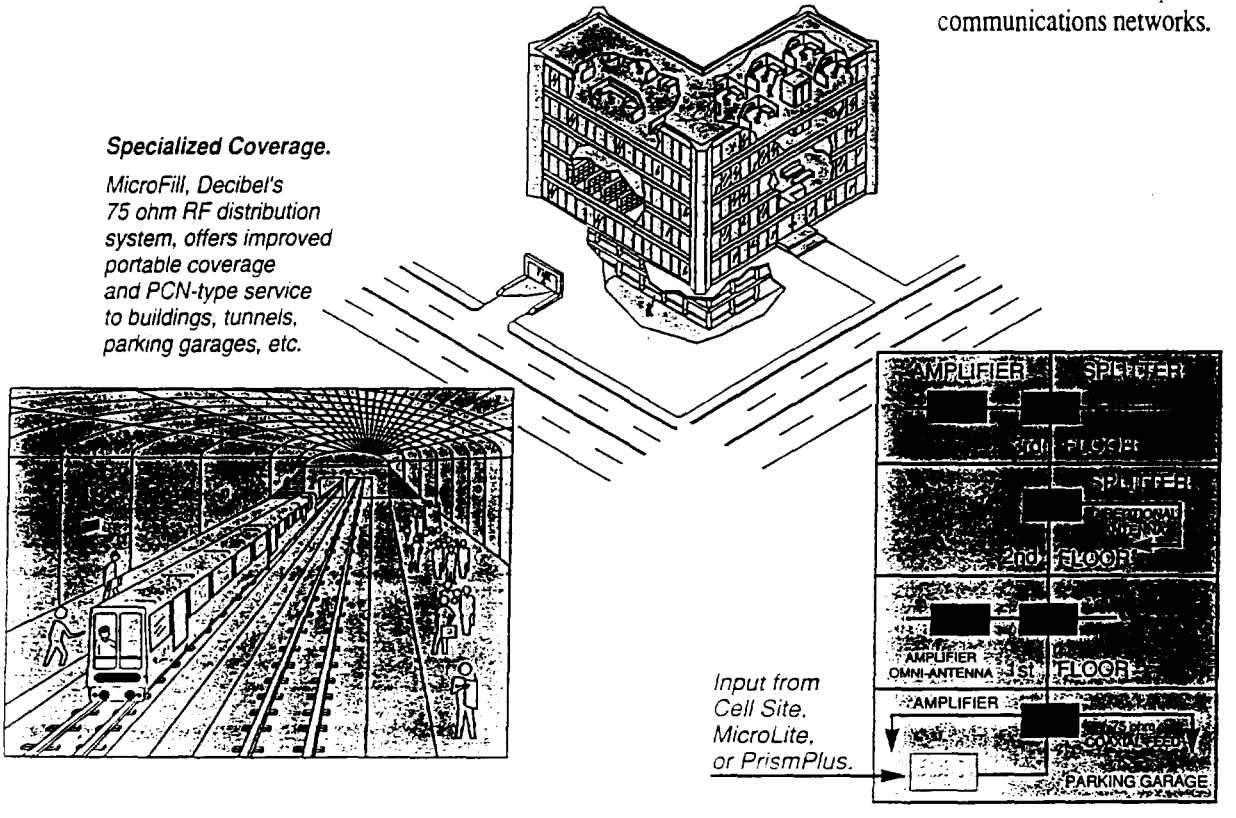

Specialized Coverage.

MicroFill, Decibel's 75 ohm RF distribution system, offers improved portable coverage and PCN-type service to buildings, tunnels, parking garages, etc.

DECIBEL PRODUCTS

Micro Fill Indoor Antenna

DB781S50N-C, DB781S75F-C

Model Number	DB781S50N-C	DB781S75F-C
Impedance	50 ohms	75 ohms
Termination	Type N-Female	Type F-Female
Frequency Range	824-894 MHz	
Gain	1.0 dBd or 3.1 dBi	
VSWR	≤1.5:1	
Pattern Characteristic	"Butterfly" pattern with freespace null directly below antenna	
Polarization	Perpendicular to C-C plane	
Max. Input Power	50 Watts	
Other Information	Application: Indoor Tx/Rx	
Weight	1.7 lbs	
Material	Back Panel: Brass Radiating Elements: Brass Radome: ABS Plastic	
Color	Off-White	
Mounting	Four mounting holes in backplate.	
Packing Size	12" x 12" x 12"	
Shipping Weight	2.7 lbs	

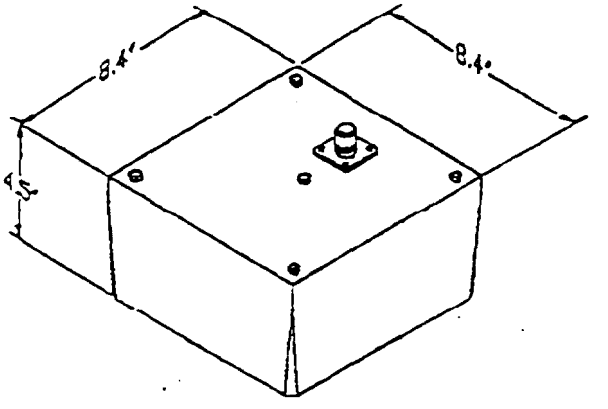

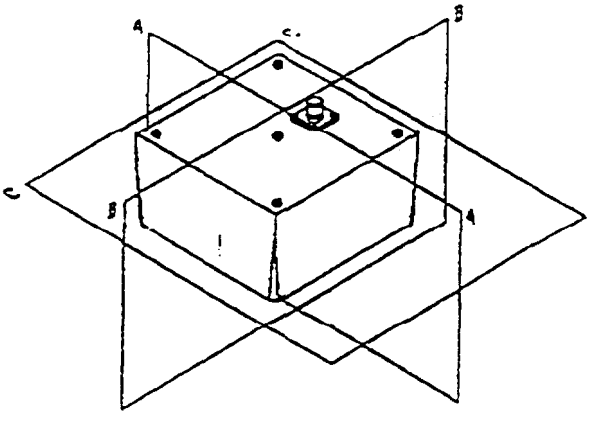

Plane A-A

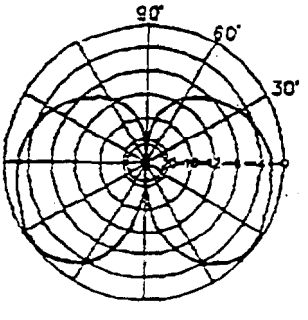

Plane B-B

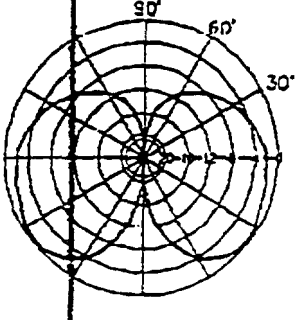

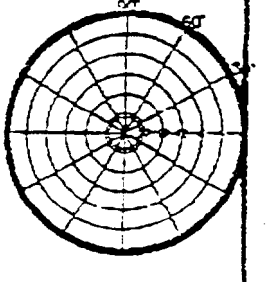

Plane C-C

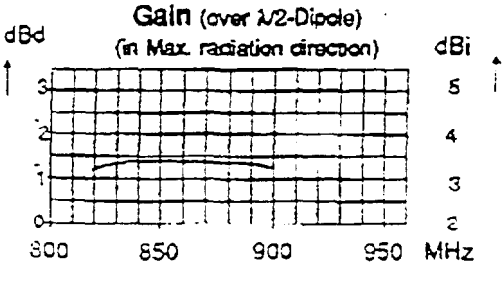

DECIBEL PRODUCTS

Micro Fill Indoor Antenna

DB781D50N-C, DB781D75F-C

Model Number	DB781D50N-C	DB781D75F-C
Impedance	50 ohms	75 ohms
Termination	Type N-Female	Type F-Female
Frequency Range	824-894 MHz	
Gain	> 4.0 dBd or >6.1 dBi Max in A-A and C-C plane	
VSWR	<1.5:1	
Beamwidth (3 dB from max)	225° N.A. N.A.	A-A plane B-B plane C-C plane
Polarization	Perpendicular to C-C plane	
Max. Input Power	50 Watts	
Other Information	Application: Indoor Tx/Rx	
Weight	2.2 lbs	
Material	Back Panel: Radiating Elements: Radome:	Brass Brass ABS Plastic
Color	Off-White	
Mounting	Four mounting holes in backplate.	
Packing Size	12" x 12" x 12"	
Shipping Weight	3.2 lbs	

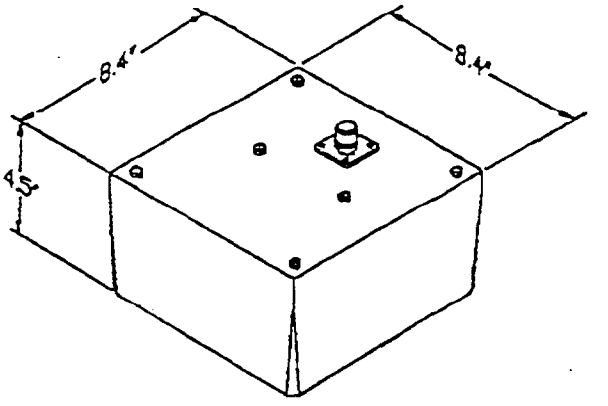

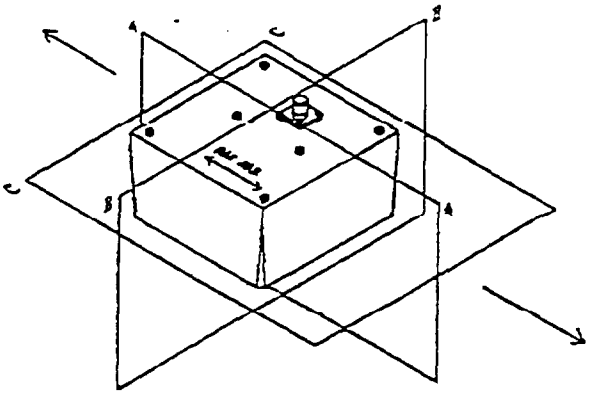

Plane A-A

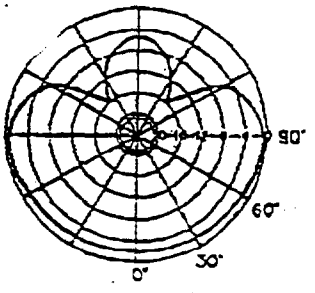

Plane B-B

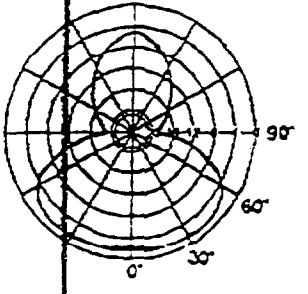

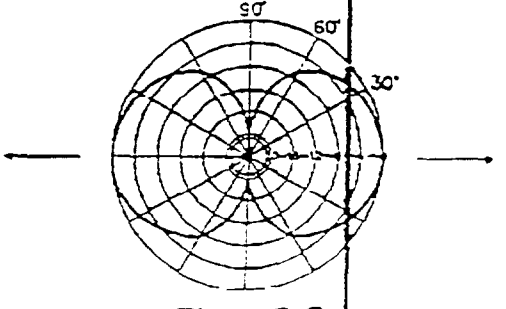
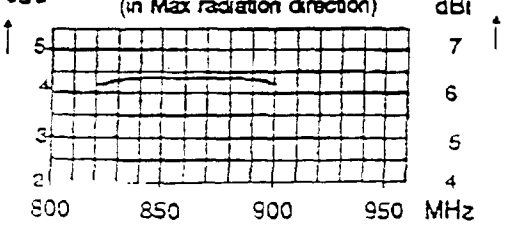
Plane C-C