DECIBEL PRODUCTS

Micro Fill Indoor Antenna

DB781LP50N-C, DB781LP50F-C

Model Number	DB781LP50N-C	DB781LP50F-C
Impedance	50 ohms	75 ohms
Termination	Type N-Female	Type F-Female
Frequency Range	824-894 MHz	
Gain	> 6.5 dBd or >8.6 dBi	
VSWR	<1.5:1	
Beamwidth (3 dB from max)	70° 90° 85°	A-A plane B-B plane C-C plane
Polarization	Perpendicular to C-C plane	
Max. Input Power	50 Watts	
Other Information	Application: Indoor Tx/Rx >10 dB F/B ratio	
Weight	1.7 lbs	
Material	Back Panel: Radiating Element: Radome:	Brass Brass ABS Plastic
Color	Off-White	
Mounting	Four mounting holes in backplate.	
Packing Size	12" x 12" x 12"	
Shipping Weight	2.7 lbs	

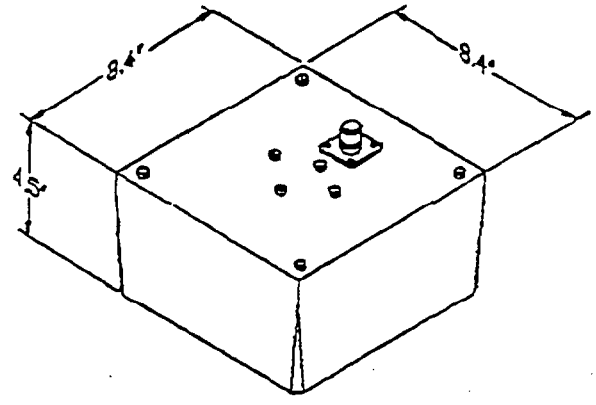

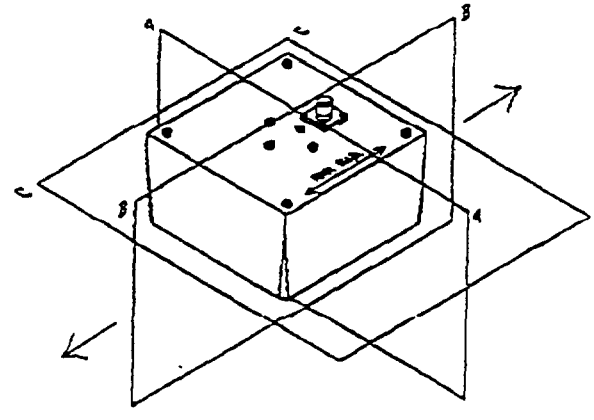

Plane B-B

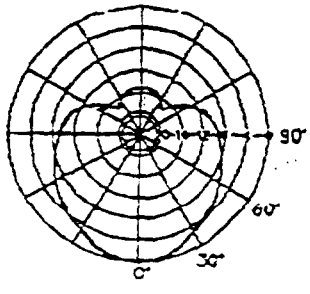

Plane A-A

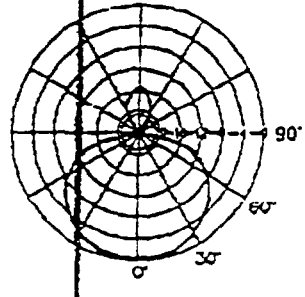

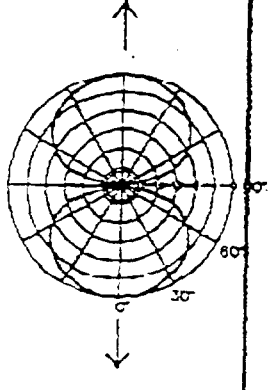

Plane C-C

Gain (over λ/2-Dipole)
(in Max radiation direction)

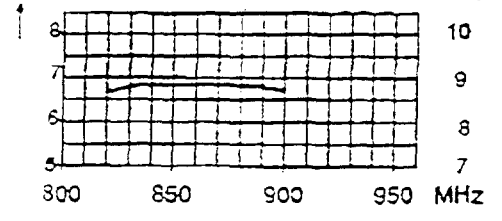

DECIBEL PRODUCTS

Micro Fill Indoor Antenna
DB791S50N-C, DB791S75F-C

Model Number	DB791S50N-C	DB791F75F-C
Impedance	50 ohms	75 ohms
Termination	Type N-Female	Type F-Female
Frequency Range	824-894 MHz	
Gain	>6.0 dBd or >8.1 dBi	
VSWR	<1.5:1	
Beamwidth (3 dB from max)	80° 120° 105°	A-A Plane B-B Plane C-C Plane
Polarization	Perpendicular to C-C plane	
Max. Input Power	50 Watts	
Other Information	Application: Indoor Corner Tx/Rx with >10 dB Front to Back Ratio	
Weight	1.4 lbs	
Material	Back Panel: Radiating Elements: Radome:	Brass Brass ABS Plastic
Color	Off-White	
Mounting	Four mounting holes in backplate.	
Packing Size	12" x 12" x 12"	
Shipping Weight	2.4 lbs	

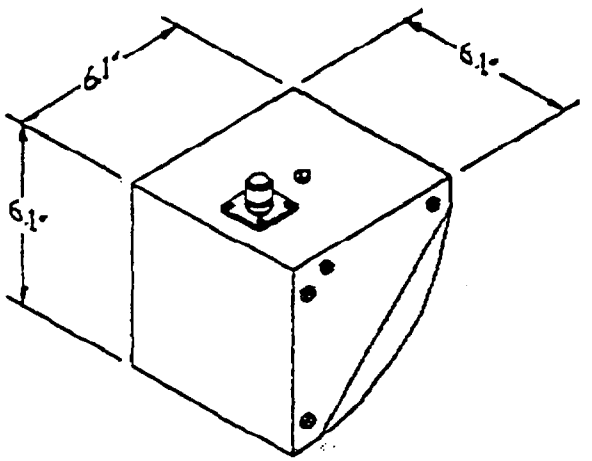

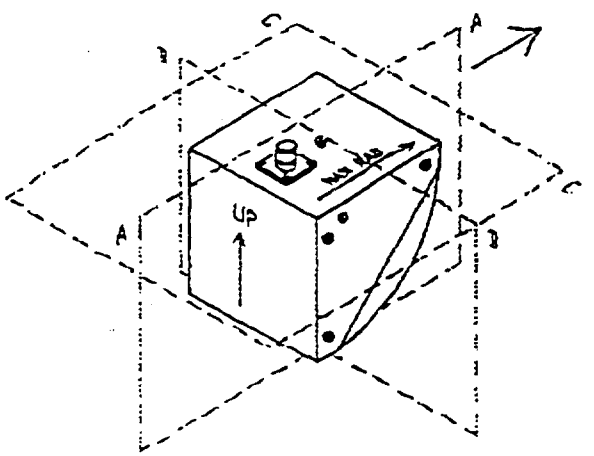

Plane A-A

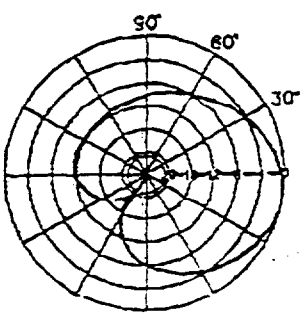

Plane B-B

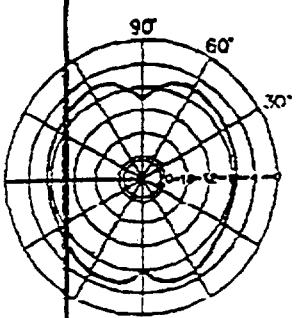

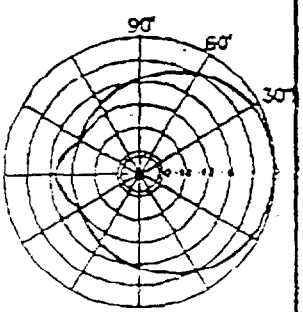

Plane C-C

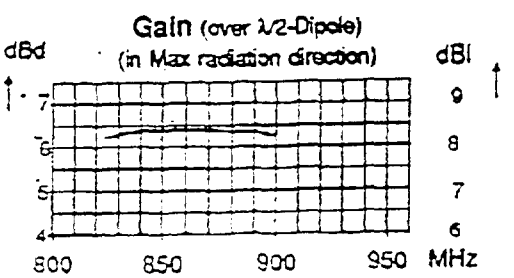

Exhibit 8

PCMCIA "Pager Card" Prototype
(Forerunner of PCMCIA Transceiver Card)

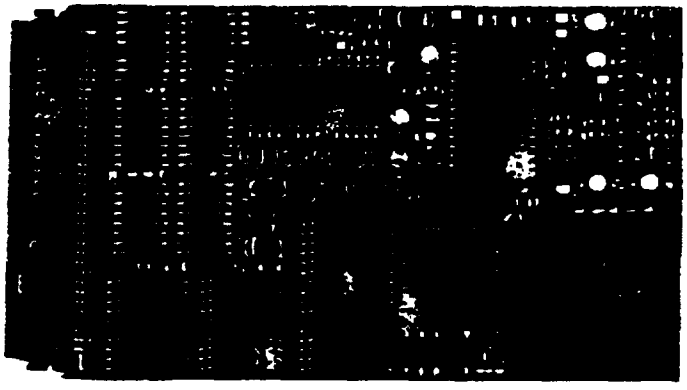

Physical Characteristics

Card Type:	PCMCIA Type II
Interface:	PCMCIA Memory Card or I/O
Antenna:	• Flush mount (battery could be incorporated into external handle; AAA preferred, AA probably too large) • Some manufacturers may require custom design and location. • Contact platform manufacturers on EMI and RFE compatability. This is consistent with other PCMCIA card product manufacturers.
Switch:	Power On-Off
Indicator:	Blinking LED • Message waiting indicator • Low battery indicator when voltage drops to design unit
Display:	None
Lable:	PCMCIA STU release/paragraph 3.1.7 lable

PCMCIA "Pager Card" Prototype
(Continued)

Power Source

Battery:

- 700 hours out of portable (350 hours lower limit)
- Internal see PCMCIA STD release 1.0 paragraph 3.1.6 battery location
- Consider re-chargeable options when card is inserted in platform
- Use portable power source when card is inserted in PCMCIA slot
- Insert and remove with portable power active

Product Features

Data Rate: 2,400 BPS; product evolution should anticipate upgrade to 4,800 or 9,600 BPS as 2nd generation product

Format: POCSAG (2400 BPS)

Address: Minimum of 4 POCSAG addresses. Minimum of 16 addresses including the 2 POCSAG function bits.

Memory: 32K bytes minimum

Internal Clock: Time and date stamp of all received messages or last packet received.

Electrical Requirements/ Commensurate with Motorola Bravo pager
RF Requirements Commensurate with Motorola Bravo pager

Portable Unit
(PDMCIA Card Driver Software)

Display Features: PCMIA pager card should rely on software in the portable unit to manage the information in RAM

- Message waiting indicator
- Number of messages, type of message, time and date stamp of message arrival
- Low battery indicator for PCMCIA card when voltage not within operational limit
- Battery charging indicator (min./max.)
- PCMCIA card in-range indicator

PCMCIA Transceiver Card

Receiver: See PCMCIA receiver card

Transmitter:

Power Out:	100 mw to 500 mw
Frequency:	930 MHz
Modulation:	Constant Amplitude
Bandwidth:	FCC masking specification for 25 kHz bandwidth

Exhibit 9

U. S. Portable Computer Installed Base

	1985	1990	1995
Laptop	396 K	3859K	12,072K
Notebook		169K	6122K
Pen-based		9K	6110K
Handheld		94K	11,462K
Total	396K	5537K	37,229K
% Growth		1300%	570%

Source: DATAQUEST, 1991

Summary Biographical Information -- Roger D. Linquist

PageMart, Inc.

CEO, PageMart, Inc. 1989-Present

- *Paging Business*
  - Founder of PageMart
  - Direct Broadcast Satellite (DBS) Control of paging transmitters (pioneering DBS system in Dallas/Ft. Worth, February 1990)

PacTel Personal Communications

CEO, PacTel Personal Communications, 1986-1989

- *Cellular Business (largest U.S. subscriber base)*
  - 100% or controlling interest: Los Angeles, San Diego, Sacramento, Atlanta, Detroit
  - Active minority interest (system management): San Francisco/San Jose
  - Passive minority interest: Dallas/Ft. Worth
- *Paging Business (Third largest)*
- *Automatic Vehicle Location*

Communications Industries

CEO (V. P., COO), Communications Industries, 1982-86

- *Paging Business (Third largest)*
- *Cellular Business*
  - Founding Director of Cellular Telecommunications Industry Association (CTIA)
  - 100% interest: Atlanta and San Diego
  - Minority interest: San Francisco/San Jose and Dallas/Ft. Worth
- *Manufacturing Business*
  - Paging switch manufacturer (BBL)
  - Mobile Communications Components Manufacturer (Decibel Products)

McKinsey & Co., Inc. (Management Consultants)

Management Consultant, McKinsey & Co, Inc., 1976-82

- *Telecommunications Business Practice*
- *Computer and Computer Peripheral Business Practice*
- *Space Systems Technology Businesses*

Texas Instruments

Department Manager, Video Systems and Calculator Products, 1974-1976

- *Consumer Products Division*
  - Video Systems Program (all electronic CCD camera)
  - Business calculator products

Branch Manager, Systems & Information Sciences, 1971-74

- *Central Research Laboratory*
  - Interactive Cable TV System Program (hardware and software development)
  - Advanced RF Receiver Technology (all solid state VHF/UHF TV Turner)

EDUCATION

Northwestern University	-- MBA
Purdue University	-- MSME
Purdue University	-- BSME

Summary Biographical Information -- Malcolm Lorang

PageMart, Inc.

V. P. Engineering, PageMart, 1989-Present
- Advanced wireless system and equipment design

International Teletrac Systems

Corporate Scientist, International Teletrac Systems, 1988-89
- Corporate Systems/Architect Engineer
- Liaison to AVM manufacturers and AVM Product/Architect Engineer

Texas Instruments

Member of Technical Staff, Texas Instruments, 1972-1988
- **Government Products Group:** Member of Technical Staff - Systems Engineer
- **Semiconductor Group:** System design for next generation Telco product IC's
- **Corporate Lab/Corporate Engineering Center:** Architect/Systems and Circuit Engineer of Bernouille disk product, facilities computer communications network product, video coding products and rf systems design.

Magnavox Research Labs

Senior Engineer, Magnavox Research Labs, 1957-1972
- System Architect and Engineer on Specialized communications systems, primarily on Spread Spectrum Communications Systems.

FORMAL EDUCATION

West Coast University -- MS, Operation Research
-- MS, System Engineering
-- MS, Management Science
Pacific State University -- BSEE

References

References from M-Tel Comments

MT4 W.C.Y. Lee
Mobile Communications Engineering
McGraw-Hill Book Company
1982

MT5 W.C.Y. Lee
Mobile Communications Design Fundamentals
Howard W. Sams & Co.,
1986

MT7 W. C. Y. Lee
Mobile Cellular Telecommunications Systems,
McGraw-Hill Book Company
1989 (see page 27 or attached figure)

PageMart References

1) W.C.Y. Lee, Patent Number 4,932,049; Feb. 6, 1989
Cellular Telephone System

2) W.C.Y. Lee, Patent Number 5,067,147; Nov. 7, 1989
Microcell System For Cellular Telephone System

3) W.C.Y. Lee, Patent Number 4,249,181; Feb. 3, 1981
Cellular Mobile Radiotelephone System
Using Tilted Antenna Radiation Patterns

4) John G. Proakis
Digital Communication
McGraw-Hill Series in Electrical Engineering
Communications and Signal Processing, 1989

5) M. Blanco
"Probability of Symbol Error For M-ary FSK with
Diversity," IEEE Trams. Commun., Vol. COM-37 (1989)

6) Kenneth Bullington
Radio Propagation for Vehicular Communications
IEEE Trans. Vehicular Technology, Vol. VT-26, No. 4, Nov. 77

7) Neal H. Shepherd, Radio Wave Loss Deviation and Shadow Loss at 900 MHz IEEE Transaction on Vehicular Technology, Vol. VT-26, No. 4, Nov. 1977.

8) "Methods and statistics for estimating field strength values in the land mobile services using the frequency range 30 MHz to 1 GHz." CCITT-XV Plenary Assembly, Geneva, Rep. 567, vol. 5, 1982.

9) P. I. Wells and P.V. Tryon, "The attenuation of UHF radio signals in houses." *IEEE Trans. Veh. Technol.*, V1-26, pp. 358-36.1977.

10) H. H. Hoffman and D. C. Cox, "Attenuation of 900 MHz radio wave propogating into a metal building." *IEEE Trans. Antennas Propagation*, vol. AP-30, pp. 808-811, 1982.

11) D. C. Cox, R. R. Murray, and A. W. Norris, "Measurements of 800 MHz radio transmission into buildings with metallic walls." *Bell Sys Tech. J.*, vol. 62, pp. 2695-2718, 1983.

12) E. H. Walker, "Penetration of radio signals into buildings in the cellular radio environment." *Bell Syst Tech. J.*, vol. 62, no. 9, PP. 2719-2734. 1984.

13) D. C. Cox, R. R. Murray, and A. W. Norris, "800 MHz attenuatic measured in and around suburban houses." *Bell Labs. Tech. J.*, vol. 63, pp. 921-954, 1986.

14) D. C. Cox, R. R. Murray, and A. W. Norris, "Antenna height dependence of 800 MHz attenuation measured in houses." *IEEE Trans, Veh. Technol.*, vol VT-34, pp. 108-115, 1985.

15) J. Horikoshi, K. Tanaka, and T. Morinaga, "1.2 GHz band wave propagation measuurements in concrete buildings for indoor radio communications." *IEEE Trans. Veh. Technol*, vol. VT-35, pp. 146-152, 1986.

16) *General Electric Systems Application Manual*, sec. 80-A1. Table IV-3, General Electric Corp., Lynchburgh, VA. Dec. 1972.

17) Kozono, S., and K. Watanabe, "Influence of Environmental Buildings on UHF Land Mobile Radio Propagation," *IEEE Trans. on Communications* Com-25 (Oct. 1977): 1113-1143.

18) Walker, E. H., "Penetration of Radio Signals into Building in the Cellular Radio Environment." *Bell System Technical Journal* 62: Pt. I (Nov. 1983): 2719-2734.

19) N. H. Shepherd "Radio Wave Loss Deviation and Shadow Loss at 900 MHz." *IEEE Transactions Veh. Technol.* vol. VT-26, pp. 309-313 1977.

20) William Stallings, Handbook of Computer Communications Standards, vol. 1 A Stallings/MacMillan Book. pp. 79-81.

21) Philip Harley, Short Distance Attenuation Measurements at 900 MHz and 1.8 GHz using low antenna heights for microcells. *IEEE Journal Selected Areas in Communications*, vol. 7, no. 1., Jan 89.

22) Special Issue *IEEE Trans. Vehicular Technology* vol. 37, no. 1, Feb 88 on propagation models.

23) Bultitude, Robert and Bedal, Keith "Propagation Characteristics on Micorcellular Urban Mobile Radio Channels at 910 MHz." *IEEE Journal on Selected Areas in Communication*, vol. 7, no. 1, Jan 89, pp. 31-39.

24) Special Issue BSTJ, Jan 1979, vol. 58, no. 1 on Advanced Mobile Phone Service

25) Strejc, V. "Approximate Determination of the Control Characteristics of an Aperiodic Response Process," *Automatisme*, March 1960.

26) A. L. McBride and S. A. Gronemever, "MSK and Offset 2PSK Modulation." *IEEE Trans. on Comm.*, vol. COM-24, Aug. 1976.

27) M. Ramadam, "Practical Considerations in the Design of Minimum - Bandwidth, 90 mb 8-PSK Digital Microwave Systems" Proc. *IEEE International Conf. on Comm.*, June 1976, pp. 29-1 to 29-6.

C

MOTOROLA INC.

July 13, 1992

Mr. Roger D. Linquist, Chairman
PageMart, Inc.
6688 North Central Expressway
Suite 900
Dallas, Texas 75206

Subject: Personal Information Messaging Service (PIMS)

Dear Mr. Linquist:

We have had an opportunity to review the PIMS system design and have concluded that Motorola could develop and manufacture both the network equipment and the subscriber receiver/transmitter unit using a combination of existing and emerging technologies. The system elements utilized in the design would require a base station unit containing multiple transmitters for the forward link; a base station unit containing multiple receivers for the return link; a trunking control unit; and a subscriber unit containing a receiver and transmitter. All of the network equipment technology is essentially available today; however , additional development will be necessary to ensure against receiver desensitization, in harsh RF site locations. The subscriber receiver/transmitter unit will require further development if it is to use the PCMCIA card package. We believe such a "pager card" to be feasible.

Network controlled frequency agility
Our current Synthesized Bravo Plus pager can switch frequencies in response to over the air commands from the paging terminal. Your proposed subscriber unit might require additional functionality which will be extentions of the technology.

Return Link transmitter
Achieving the required transmitter performance using pager battery systems and pager antennas represents a substantial technological challenge. The subscriber unit design may be simplified if the pager card has access to the host portable computer battery power in order to have a sustained transmit capability even at the hundred milliwatt level. The "pager card" will probably need an external attachment to the PCMCIA card package in order to accommodate a more efficient antenna.

Enhanced Digital Modulation
The high speed coding techniques available to achieve 4,800 bps or ERMES data rate of 6,250 bps are achievable and suitable to the subscriber transceiver unit. Various pager manufacturers are currently developing ERMES supporting technology.

In summary, we believe that a "pager card" can be developed to meet requirements with reasonable cost and size assuming transmitter power can be sourced from the host portable computer, and a more efficient, external antenna is used. We look forward to continuing the development of your proposal.

Regards,

Fernando Gomez

Fernando Gomez
Director, Paging Products Operation
Motorola, Inc.

c: Jerry Leonard

D

SFA INC.

CORPORATE OFFICE
1401 McCORMICK DRIVE ■ LANDOVER, MARYLAND 20785
(301) 925-9400 ■ FAX (301) 925-8612

October 5, 1992

Mr. Roger Linquist
President
PageMart, Incorporated
6688 N. Central Expressway
Suite 900
Dallas, TX 75206

Dear Mr. Linquist:

SFA, Inc. is pleased to submit its report on the feasibility study of the Personal Information Messaging Service (PIMS) proposed by PageMart to the FCC in its Petition of Rulemaking in February 1992.

We welcome the opportunity to answer any questions you may have about this study, or to provide you with additional information on our analysis.

Sincerely,

Donald Nowak
Manager
Telecommunications Division

DN/jj

Enclosure

PIMS FEASIBILITY STUDY

Prepared for PageMart, Inc. on its
Personal Information Managing Service (PIMS)
Proposed to the Federal Communications Commission
in its February 1992 Petition for Rulemaking.

Prepared By:

Ernest R. Freeman
J. Robert Bounds
Mirza M. Ahmad
Katherine Y. Ernhart

SFA, Inc.
1401 McCormick Drive
Landover, MD 20785

SFA's Background

SFA, Inc. was founded in 1969 to provide engineering, scientific and technical services to government and industry. As a result of SFA's proven capability for providing low-cost, high-quality research, engineering and manufacturing support, the company has achieved a ten-fold increase in sales and staffing in less than 10 years. Twice in recent years we have made *Inc. Magazine's* honor roll of America's 500 fastest-growing, privately-held companies. We now maintain a full-time staff of more than 400 employees.

Today, SFA's Telecommunications Division is backed by a fully equipped radio/microwave test laboratory including an independently operated 38,000 square foot manufacturing facility. Our manufacturing capability allows prototype and limited production implementation of both mechanical and electrical assemblies and subassemblies.

SFA's long experience with telecommunications technology gives us an insight into new developments in the industry before these developments become widely established. We are able to forecast and meet our clients' requirements efficiently and effectively. As an example, SFA tracks developments in areas such as slow-scan television radio transmission, and is even performing research into the application of artificial neural networks to communication.

FEASIBILITY OF PAGEMART'S PIMS PROPOSAL

EXECUTIVE SUMMARY

SFA has analyzed PageMart's proposed Personal Information Messaging Service (PIMS) to determine whether PIMS is technically feasible. Each major design issue was evaluated, including frequency reuse, system coverage, interference, signalling protocol, system capacity, and use of current technologies. Based on this review, SFA concludes that PIMS is a technically and commercially feasible system offering advanced data communications capabilities. SFA has also determined that there are no technical design issues in the proposal for which empirical implementation solutions do not already exist in engineering literature or in real-world communication experience. The fundamental design of PIMS is sound and workable as proposed in the Technical Appendix to PageMart's February 1992 Petition for Rulemaking and March 1992 Pioneers Preference Request.

In an innovative and creative manner the PIMS design selectively exploits certain features of Cellular, SMR, trunking, POCSAG paging, mobile satellite technology, packet switching, simulcasting, radio location, data communications and micro/pico cell concepts to achieve high throughput in a two-way data transmission system.

PIMS system can be described as a combination of several existing (e.g., cellular, paging) and emerging (e.g., micro/pico cell, mobile satellite) technologies, blended to create an advanced messaging service resulting in major performance improvements in system throughput. None of the technologies proposed by PIMS, whether existing or emerging require any verification in themselves since these technologies are now well known through real-world experience. Even those technologies proposed in PIMS which may be classified as "emerging" are now well beyond the testing stage and are being rapidly employed.

This report is organized into four sections as follows:

Section I: **System Overview**

Section II: **Technical Discussion**

Section III: **System Architecture and Technology**

Section IV: **Conclusion**

After reviewing PageMart's PIMS proposal with respect to existing technical literature, published empirical data and wireless communications industry experience together with SFA's accumulated technical data, we have determined that PIMS is not only technically feasible, but is an important system development in wireless, non-interactive communications. The following technical feasibility conclusions were reached on key aspects of the PIMS system:

- **PageMart's PIMS proposal based on a 4 cell reuse is not only feasible, but desirable;**
- **PIMS' return link is fully functional in and out of buildings;**
- **PIMS' return link and forward link is approximately balanced resulting in fewer than two receiver sites per transmit site;**
- **Adjacent channel interference is the return link is controllable through conventional engineering design practices;**
- **The polling channel can readily support PIMS subscriber capacity estimates;**
- **The return link capacity is effectively matched to the forward polling link;**
- **PageMart's PIMS system capacity estimates are conservative;**
- **PIMS system capacity will proportionally increase as improvements in hardware/software are made;**
- **PageMart's "cellular" approach to PIMS is different than cellular telephone; and**
- **The technical feasibility of PIMS is confirmed by its use of existing commercial technology.**

SECTION I SYSTEM OVERVIEW

PIMS is a high capacity data transmission system ideally suited for professionals, white collar workers, and consumers en mass requiring longer messages than currently available in conventional paging. PIMS distinguishes itself from other systems by offering high system throughput, radiolocation, low cost, open protocol, device independence, and mass appeal with virtually unlimited growth potential in the number of subscribers.

A complete PIMS network and its operation can be described as follows (a more detailed discussion is contained in Section II and III). The basic elements of PIMS are shown in Figures 1 through 5.

1. The data transmitting party (a computer terminal, fax machine or other device) transmits the message to the system controller on the landline network (PSTN) by dialing the appropriate telephone number of the system controller. The system controller has multiple incoming telephone ports capable of receiving digital information. This first step requires no further analysis or explanation, as this is a very common method of data transmission.

2. The system controller which receives the data is basically a high speed computer, programmed to control the network traffic. The system controller consists of a CPU, storage devices, and input and output ports. System controllers can be designed and programmed to perform a vast number of functions and are commonly used in hundreds of network applications around the world.

3. After receiving the message, the controller processes the message according to the address and routing information used with the message. Using the address and routing information, the controller attempts to contact the subscriber unit via a satellite Ku-band uplink/downlink. The area cell transmitters are equipped to receive the routing information via a Ku-band receiver.

4. Upon receiving the routing information the area cell transmitters ring the intended receiver on the polling channel using simulcast broadcast. The number of cell transmitter(s) involved in the simulcast transmission depend on whether the message is local, regional or nationwide. This information can be added to the subscriber unit address. The two extreme cases of a polling channel broadcast are as large as nationwide or as local as a single micro cell transmitter inside a building. Each cell transmitter involved in the simulcast broadcast transmits its own unique transmitter identification (TXID) during the broadcast.

5. The intended subscriber unit recognizes the TXID it receives from the nearest cell transmitter (or strongest signal) and sends an acknowledgement (ACK) on the return link channel (see section II). All receive stations (Tx/Rx or Rx only) receive the ACK (if within communicating distance). The ACK includes the subscriber units unique ID and the TXID which it has received. The subscriber unit identification received on the return link channel also provides the approximate location of the calling (acknowledging) party.

6. The system controller upon receiving the ACK and receiver location information, sends a "GoTo" command to the subscriber unit which instructs the unit to switch to a specific channel at a given time and also the message length - concurrently the system controller forwards the message via telephone lines or satellite to the cell transmitter indicated by the subscriber unit as having the strongest signal.

7. Once the message is received by the cell transmitter, it is held in queue at the transmitter site for transmission at the appropriate time slot (see section II). The message is then transmitted on the data channel at its appointed time. PIMS does not dictate or endorse a particular format for message transmission on the data channel. The speed of data transmission on the data channel is determined by the subscriber units in PIMS due to its open data transmission protocol. In some cases this speed could be as high as 19.2 Kbps.

8. After each packet of the message has been successfully received, the subscriber unit sends back an acknowledgment (ACK). Otherwise an Automatic Repeat Request (ARQ) or a NACK, as appropriate, is transmitted on the return link channel.

This basically completes a typical transmission cycle. There can be some variations to the above described "typical" transmission cycle. For example, the message request can be generated by a subscriber unit. Communications can also be limited strictly between a landline entity and a subscriber unit within a building cell and or an office cell. The basic mechanism of establishing a data transmission link remains the same.

SECTION II - TECHNICAL DISCUSSION

To determine the feasibility of PIMS, SFA believes the proposed system can be broken down into four major design issues:

A. Cellular Concept and Frequency Reuse
B. System Coverage and Return Link
C. Adjacent Channel Interference
D. Signalling System and System Capacity

OUTSIDE (FREE SPACE) MODE

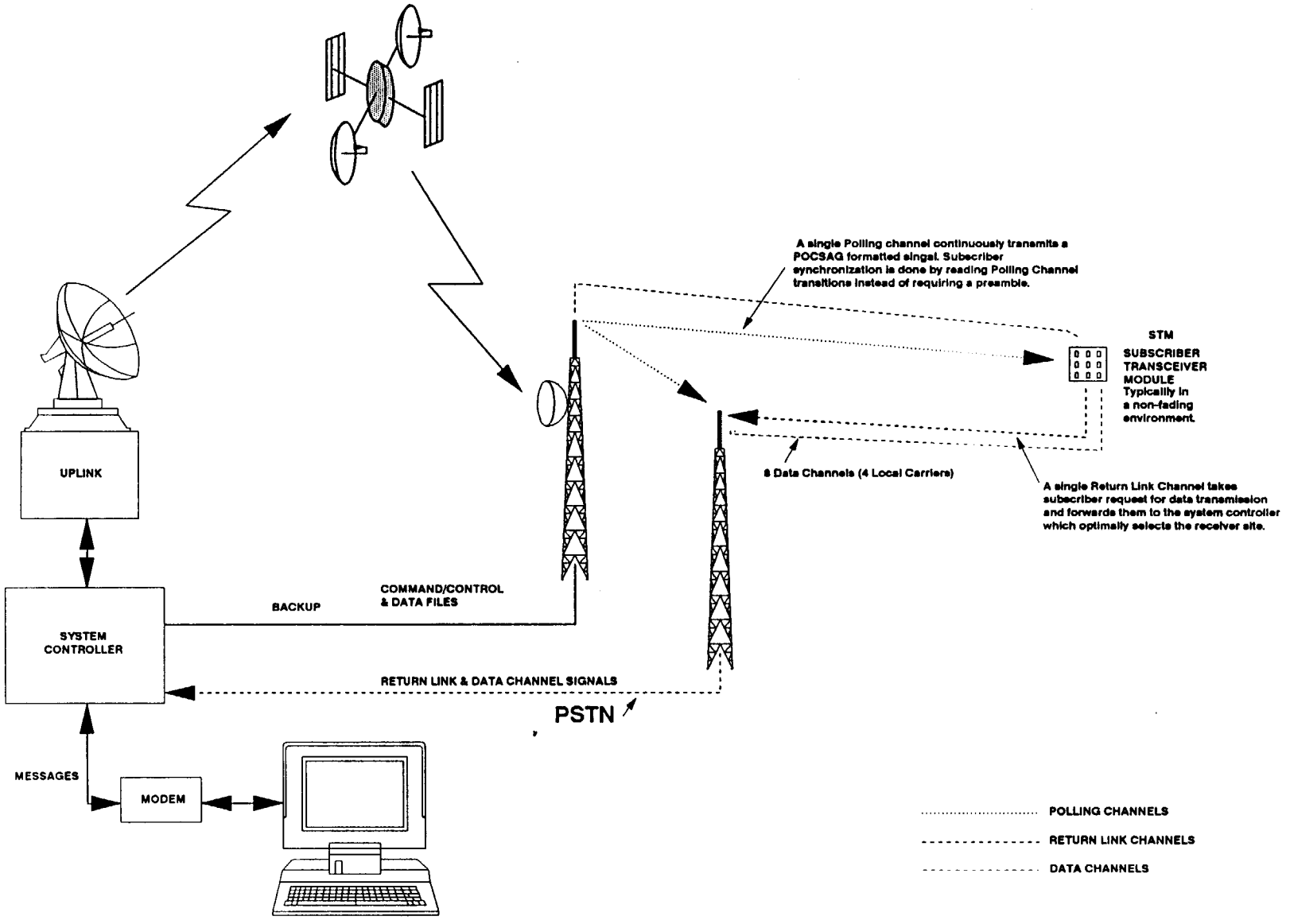

Figure 1

INBOUND MESSAGE/ACKNOWLEDGEMENT

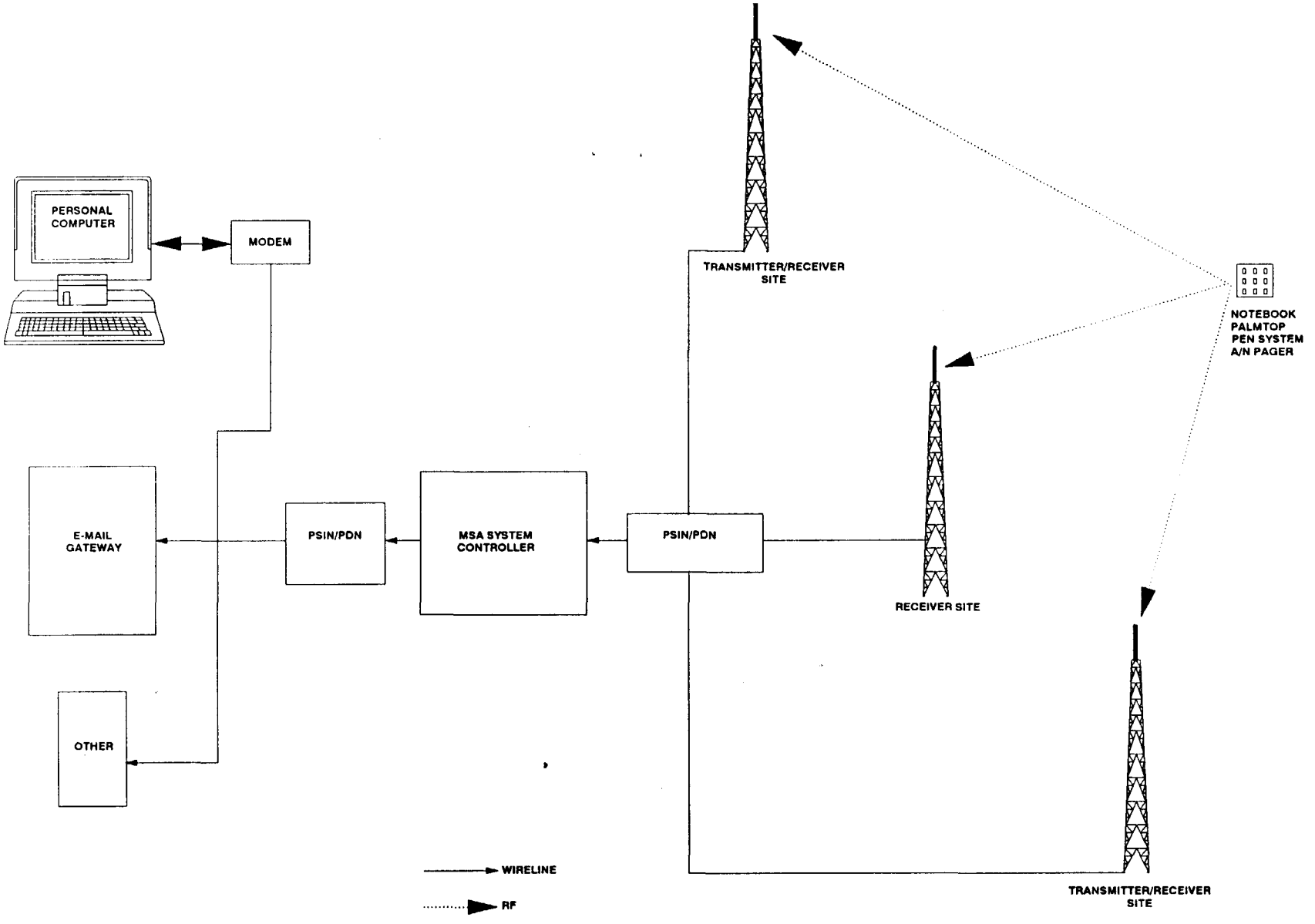

Figure 2

MESSAGE OUTBOUND TO SUBSCRIBER

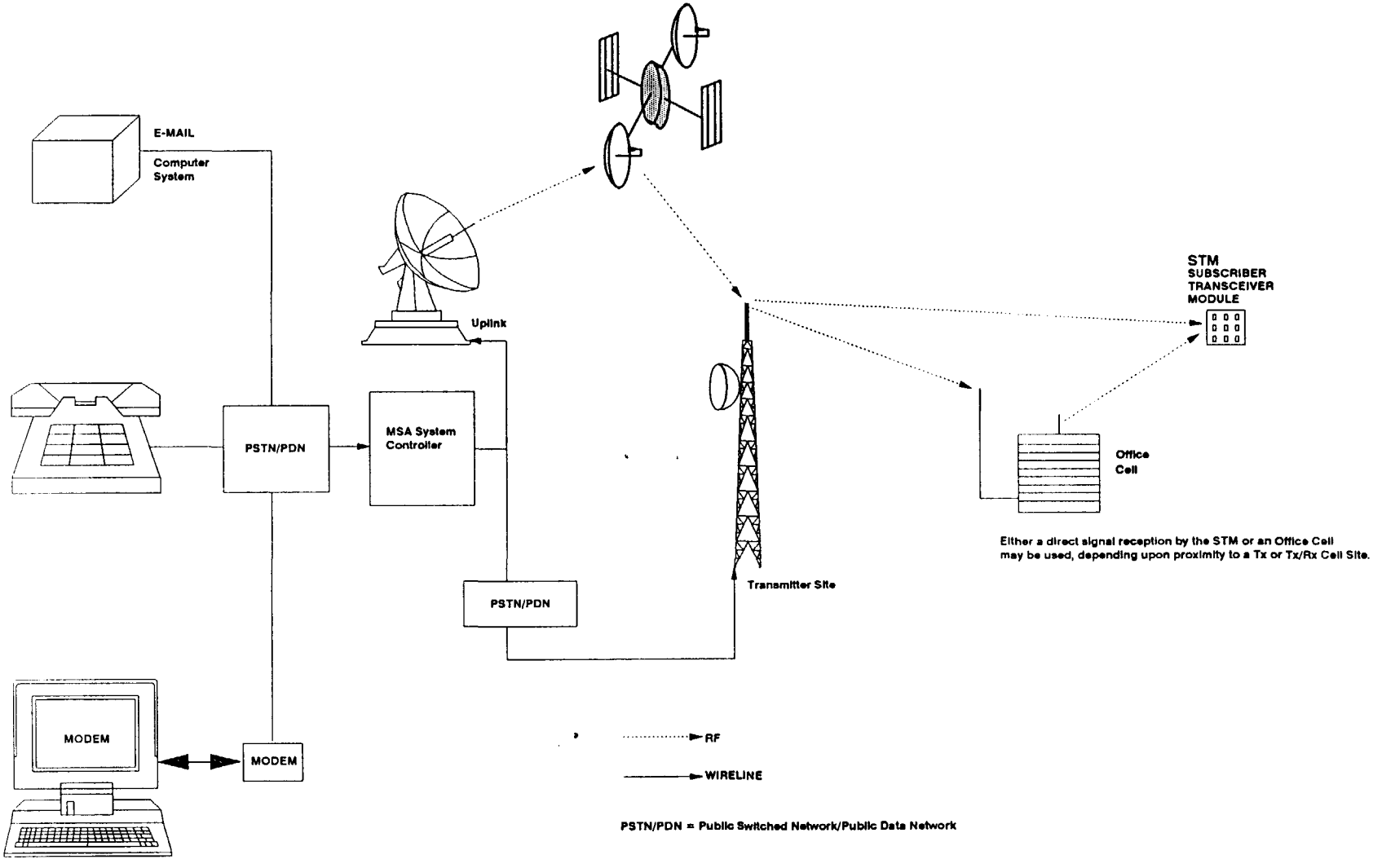

Figure 3

INBUILDING OPERATION MODES

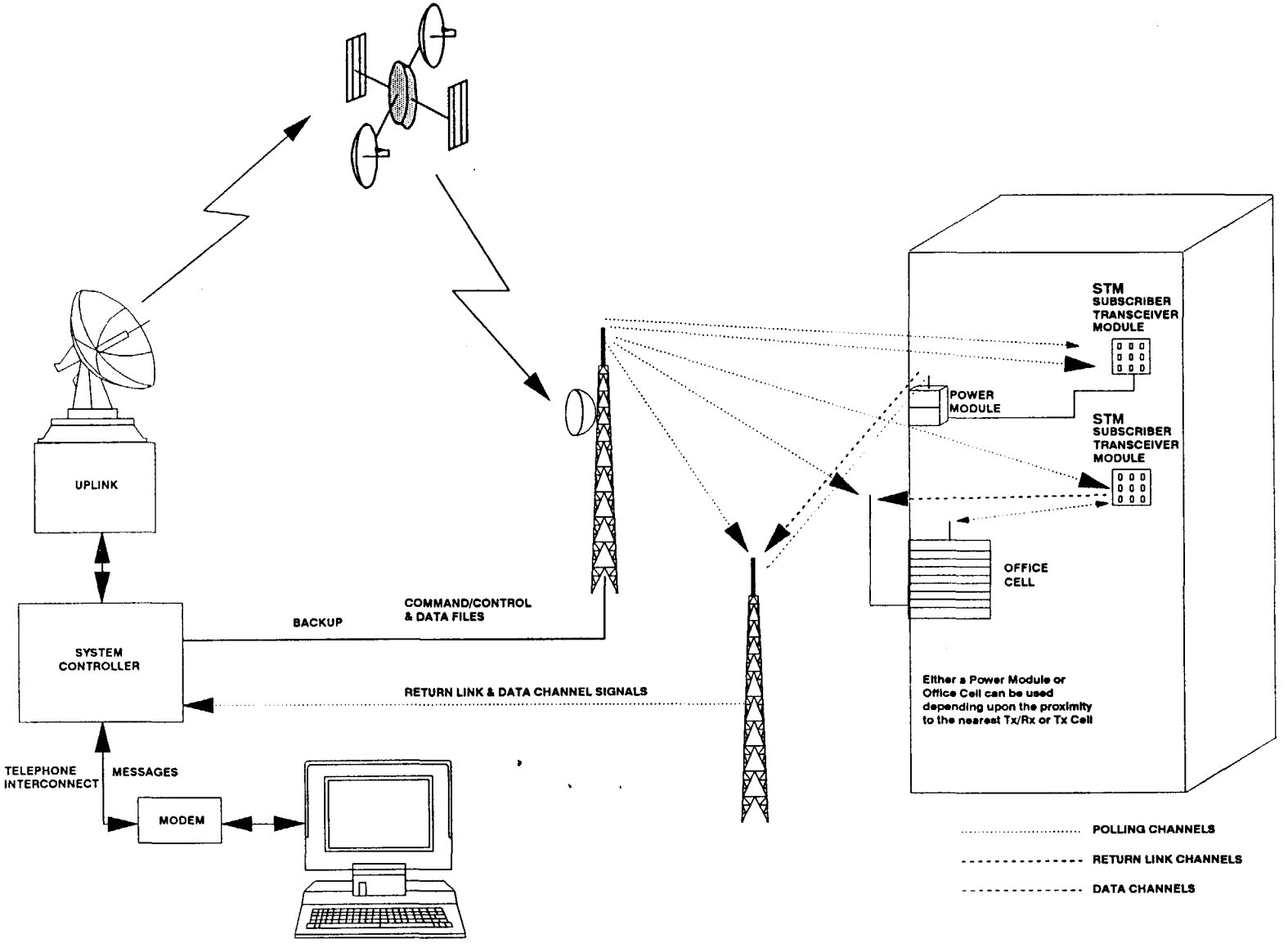

Figue 4