8-4-91

2E-10.1 What is the term for an electrical circuit in which there can be no current?
A. A closed circuit
B. A short circuit
C. An open circuit
D. A hyper circuit

2E-11.1 What is the term for a failure in an electrical circuit that causes excessively high current?
A. An open circuit
B. A dead circuit
C. A closed circuit
D. A short circuit

One question must be from the following:

2E-12-1.1 What is the term used to describe a current that flows only in one direction?
A. Alternating current
B. Direct current
C. Periodic current
D. Pulsating current

HO#1 Pg 2

2E-12-2.1 What is the term used to describe a current that flows first in one direction, then in the opposite direction, over and over?
A. Alternating current
B. Direct current
C. Negative current
D. Positive current

HO#1 Pg 2

2E-12-3.1 What is the term for the number of complete cycles of an alternating waveform that occur in one second?
A. Pulse repetition rate
B. Hertz
C. Frequency per wavelength
D. Frequency

2E-12-3.2 A certain AC signal makes 2000 complete cycles in one second. What property of the signal does this number describe?
A. The frequency of the signal
B. The pulse repetition rate of the signal
C. The wavelength of the signal
D. The hertz per second of the signal

2E-12-3.3 What is the basic unit of frequency?
A. The hertz
B. The cycle
C. The kilohertz
D. The megahertz

2E-12-4.1 What range of frequencies are usually called *audio frequencies*?
A. 0 to 20 Hz
B. 20 to 20,000 Hz
C. 200 to 200,000 Hz
D. 10,000 to 30,000 Hz

2E-12-4.2 A signal at 725 Hz is in what frequency range?
A. Audio frequency
B. Intermediate frequency
C. Microwave frequency
D. Radio frequency

2E-12-4.3 Why do we call signals in the range 20 Hz to 20,000 Hz *audio frequencies*?
A. Because the human ear rejects signals in this frequency range
B. Because the human ear responds to sounds in this frequency range
C. Because frequencies in this range are too low for a radio to detect
D. Because a radio converts signals in this range directly to sounds the human ear responds to

2E-12-5.1 Signals above what frequency are usually called *radio-frequency* signals?
A. 20 Hz
B. 2000 Hz
C. 20,000 Hz
D. 1,000,000 Hz

2E-12-5.2 A signal at 7125 kHz is in what frequency range?
A. Audio frequency
B. Radio frequency
C. Hyper-frequency
D. Super-high frequency

2E-13.1 What is the term for the distance an AC signal travels during one complete cycle?
A. Wave velocity
B. Velocity factor
C. Wavelength
D. Wavelength per meter

2E-13.2 In the time it takes a certain radio signal to pass your antenna, the leading edge of the wave travels 12 meters. What property of the signal does this number refer to?
A. The signal frequency
B. The wave velocity
C. The velocity factor
D. The signal wavelength

12

8-4-91

Subelement 2F—Circuit Components (2 Questions)

One question must be from the following:

2F-1.1 What is the symbol used on schematic diagrams to represent a resistor?

HO #1 Pg 3

A.
B.
C.
D.

2F-1.2 What is the symbol used on schematic diagrams to represent a variable resistor or potentiometer?

A.
B. 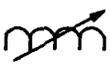
C. 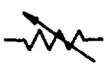
D.

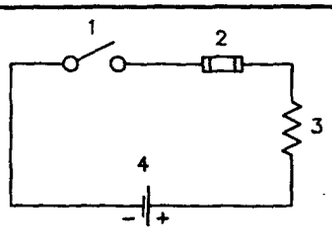

(Refer to Question 2F-1.3)

Figure 2F-1

2F-1.3 In diagram 2F-1, which component is a resistor?
A. 1
B. 2
C. 3
D. 4

HO #1 Pg 3

2F-2.1 What is the symbol used on schematic diagrams to represent a single-pole, single-throw switch?

HO #1 Pg 3

A.
B.
C.
D. 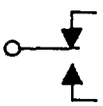

2F-2.2 What is the symbol used on schematic diagrams to represent a single-pole, double-throw switch?

A.
B. 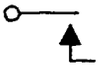
C.
D.

2F-2.3 What is the symbol used on schematic diagrams to represent a double-pole, double-throw switch?

A.
B. 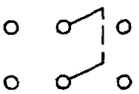
C. 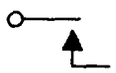
D. 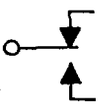

2F-2.4 What is the symbol used on schematic diagrams to represent a single-pole 5-position switch?

A. 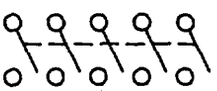
B. 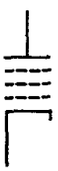
C. 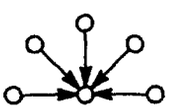
D. 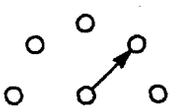

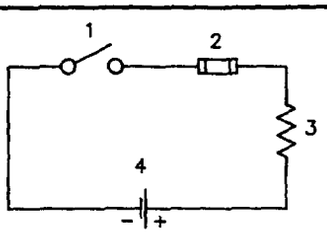

(Refer to Question 2F-2.5)

Figure 2F-2

2F-2.5 In diagram 2F-2, which component is a switch?
A. 1
B. 2
C. 3
D. 4

HO #1 Pg 3

4

8-4-91

2F-3.1 What is the symbol used on schematic diagrams to represent a fuse?

HO #1 Pg 3

A.

B.

C.

D.

2F-4.1 What is the symbol used on schematic diagrams to represent a single-cell battery?

A.

B.

C.

D.

2F-4.2 What is the symbol used on schematic diagrams to represent a multiple-cell battery?

A. 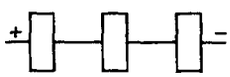

B.

C.

D.

One question must be from the following:

2F-5.1 What is the symbol normally used to represent an earth-ground connection on schematic diagrams?

HO #1 Pg 3

A.

B.

C.

D.

2F-5.2 What is the symbol normally used to represent a chassis-ground connection on schematic diagrams?

A.

B.

C.

D.

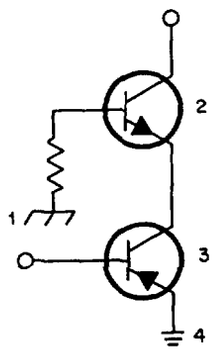

(Refer to Questions 2F-5.3 and 2F-5.4)

Figure 2F-5

2F-5.3 In diagram 2F-5, which symbol represents a chassis ground connection?

A. 1
B. 2
C. 3
D. 4

2F-5.4 In diagram 2F-5, which symbol represents an earth ground connection?

HO #1 Pg 3

A. 1
B. 2
C. 3
D. 4

2F-6.1 What is the symbol used to represent an antenna on schematic diagrams?

HO #1 Pg 3

A.

B.

C.

D.

4

8-4-91

2F-7.1 What is the symbol used to represent an NPN bipolar transistor on schematic diagrams?

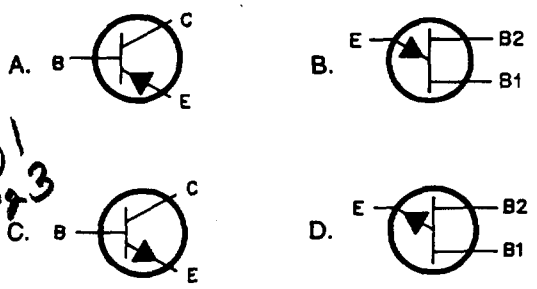

HD#1 Pg 3

2F-7.2 What is the symbol used to represent a PNP bipolar transistor on schematic diagrams?

HD#1 Pg 3

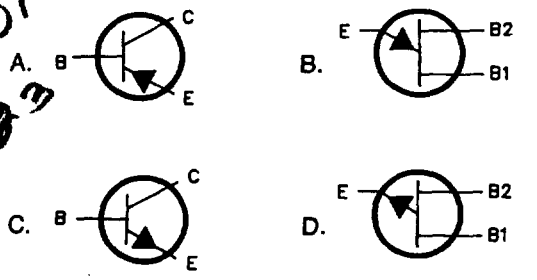

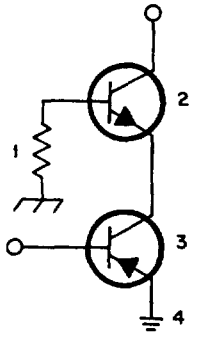

(Refer to Questions 2F-7.3 and 2F-7.4)

Figure 2F-7

2F-7.3 In diagram 2F-7, which symbol represents a PNP bipolar transistor?

A. 1
B. 2
C. 3
D. 4

HD#1 Pg 3

2F-7.4 In diagram 2F-7, which symbol represents an NPN bipolar transistor?

A. 1
B. 2
C. 3
D. 4

HD#1 Pg 3

2F-8.1 What is the symbol used to represent a triode vacuum tube on schematic diagrams?

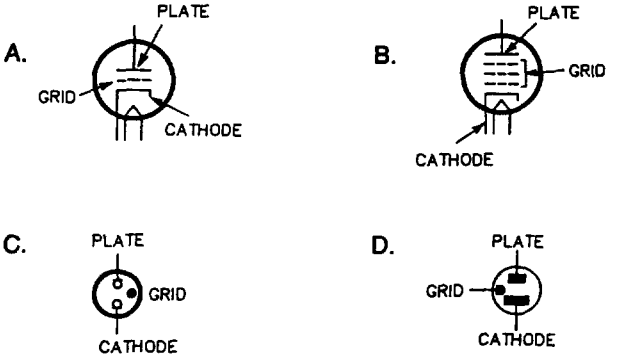

1

8-4-91

Subelement 2G—Practical Circuits (2 Questions)

One question must be from the following:

2G-1-1.1 What is the unlabeled block (?) in this diagram?

Pg 4 HD#1 Pg 4

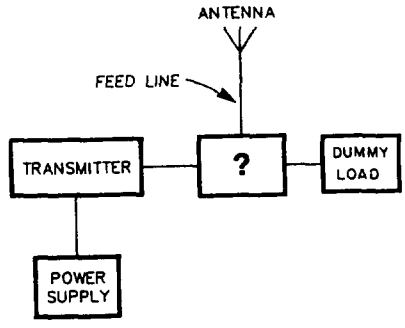

A. A terminal-node controller
B. An antenna switch
C. A telegraph key
D. A TR switch

2G-1-1.2 What is the unlabeled block (?) in this diagram?

Pg 4 HD#1 Pg 4

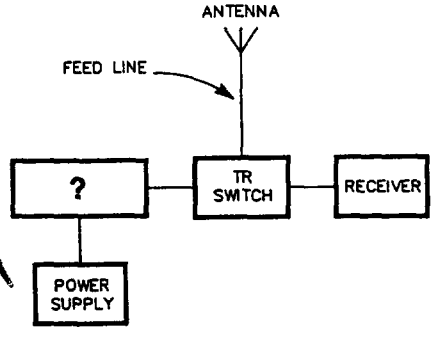

A. A microphone
B. A receiver
C. A transmitter
D. An SWR meter

2G-1-1.3 What is the unlabeled block (?) in this diagram?

Pg 4 HD#1 Pg 4

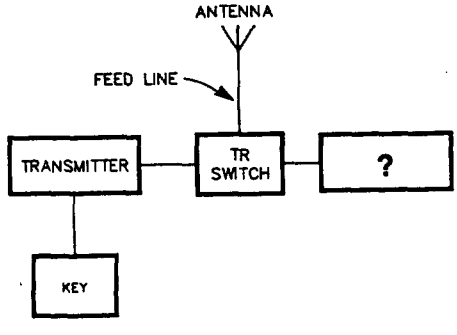

A. A key click filter
B. An antenna tuner
C. A power supply
D. A receiver

2G-1-1.4 What is the unlabeled block (?) in this diagram?

Pg 4 HD1 Pg 4

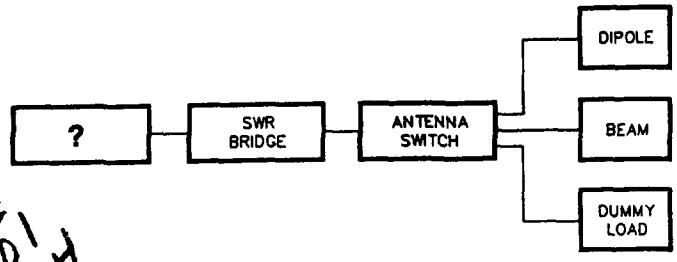

A. A transceiver
B. A TR switch
C. An antenna tuner
D. A modem

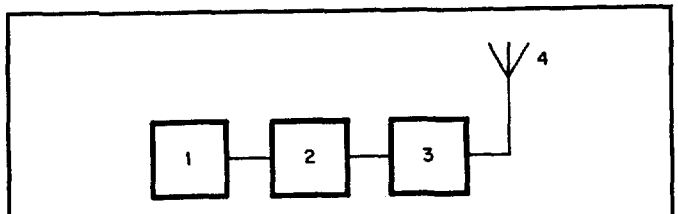

(Refer to Question 2G-1-1.5)

Figure 2G-1

2G-1-1.5 In block diagram 2G-1, which symbol represents an antenna?

HD#1 Pg 3

A. 1
B. 2
C. 3
D. 4

2G-1-2.1 What is the unlabeled block (?) in this diagram?

Pg 4 HD#1 Pg 4

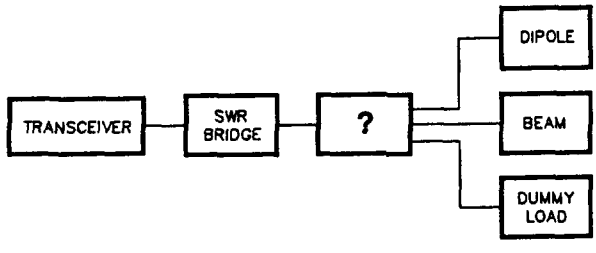

A. A pi network
B. An antenna switch
C. A key click filter
D. A mixer

0

8-4-91

2G-1-2.2 What is the unlabeled block (?) in this diagram?

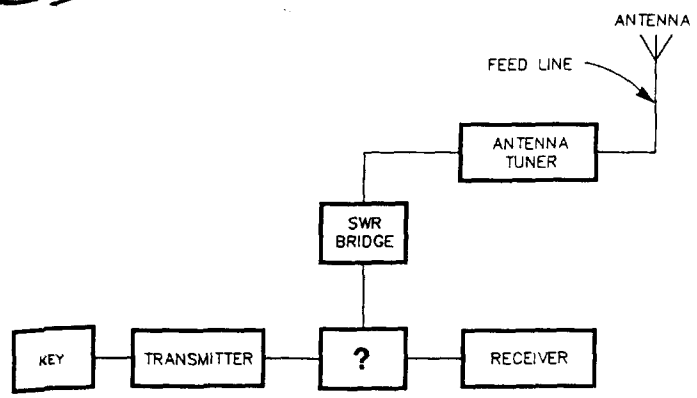

A. A TR switch
B. A variable frequency oscillator
C. A linear amplifier
D. A microphone

2G-1-2.3 What is the unlabeled block (?) in this diagram?

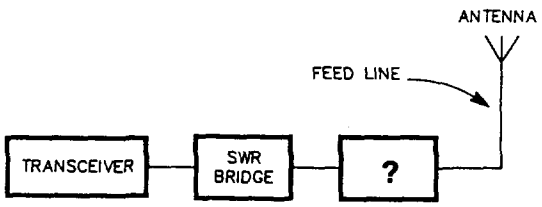

A. An antenna switch
B. An impedance-matching network
C. A key click filter
D. A terminal-node controller

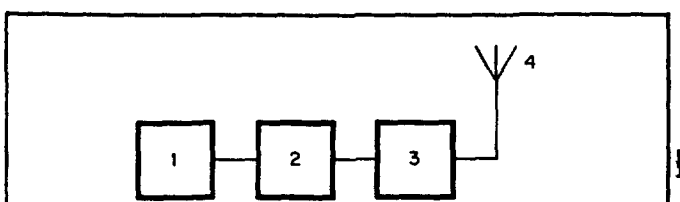

(Refer to Questions 2G-1-2.4 and 2G-1-2.5)

Figure 2G-1

2G-1-2.4 In block diagram 2G-1, if component 1 is a transceiver and component 2 is an SWR meter, what is component 3?
A. A power supply
B. A receiver
C. A microphone
D. An impedance matching device

2G-1-2.5 In block diagram 2G-1, if component 2 is an SWR meter and component 3 is an impedance matching device, what is component 1?
A. A power supply
B. An antenna
C. An antenna switch
D. A transceiver

Pg 4

One question must be from the following:

2G-2.1 In an amateur station designed for Morse radiotelegraph operation, what station accessory will you need to go with your transmitter?
A. A terminal-node controller
B. A telegraph key
C. An SWR meter
D. An antenna switch

HD1 Pg 4

2G-2.2 What is the unlabeled block (?) in this diagram of a Morse telegraphy station?

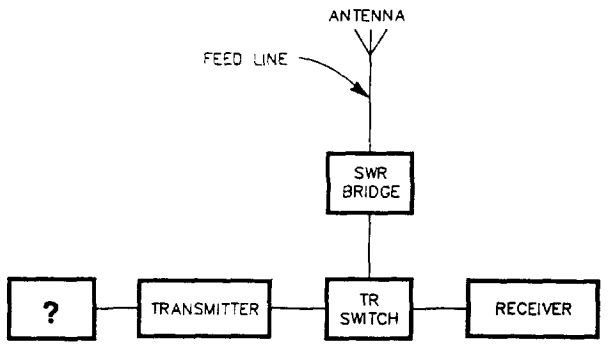

A. A sidetone oscillator
B. A microphone
C. A telegraph key
D. A DTMF keypad

2G-2.3 What station accessory do many amateurs use to help form good Morse code characters?
A. A sidetone oscillator
B. A key-click filter
C. An electronic keyer
D. A DTMF keypad

2G-3.1 In an amateur station designed for radiotelephone operation, what station accessory will you need to go with your transmitter?
A. A splatter filter
B. A terminal-voice controller
C. A receiver audio filter
D. A microphone

Pg 4 HD #1 Pg 4

2G-3.2 What is the unlabeled block (?) in this diagram of a radiotelephone station?

Pg 4 #1 HD Pg 4

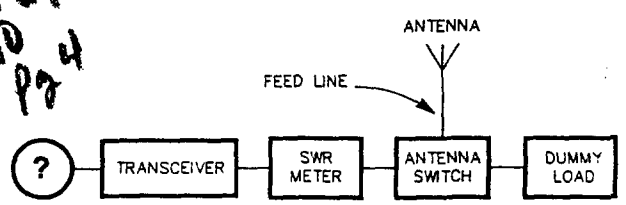

A. A splatter filter
B. A terminal-voice controller
C. A receiver audio filter
D. A microphone

2G-4.1 In an amateur station designed for radioteletype operation, what station accessories will you need to go with your transmitter?
A. A modem and a teleprinter or computer system
B. A computer, a printer and a RTTY refresh unit
C. A terminal-node controller
D. A modem, a monitor and a DTMF keypad

6

8-4-91

2G-4.2 What is the unlabeled block (?) in this diagram?

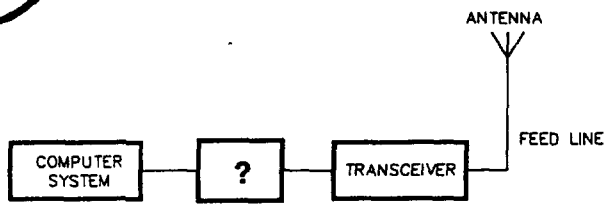

A. An RS-232 interface
B. SWR bridge
C. Modem
D. Terminal-network controller

2G-5.1 In a packet-radio station, what device connects between the radio transceiver and the computer terminal?

Pg 4

A. A terminal-node controller
B. An RS-232 interface
C. A terminal refresh unit
D. A tactical network control system

2G-5.2 What is the unlabeled block (?) in this diagram of a packet-radio station?

Pg 4

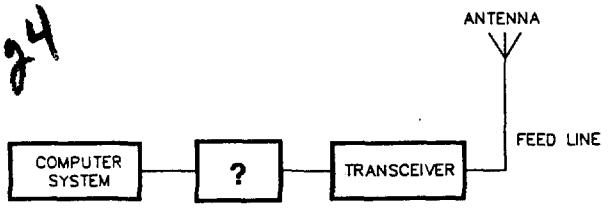

A. A terminal-node controller
B. An RS-232 interface
C. A terminal refresh unit
D. A tactical network control system

2G-5.3 Where does a terminal-node controller connect in an amateur packet-radio station?
A. Between the antenna and the radio
B. Between the computer and the monitor
C. Between the computer or terminal and the radio
D. Between the keyboard and the computer

Subelement 2H—Signals and Emissions (2 Questions)

One question must be from the following:

2H-1-1.1 What keying method is used to transmit CW?
A. Frequency-shift keying of a radio-frequency signal
B. On/off keying of a radio-frequency signal
C. Audio-frequency-shift keying of an oscillator tone
D. On/off keying of an audio-frequency signal

2H-1-1.2 What emission type describes international Morse code telegraphy messages?

Pg 8

A. RTTY
B. Image
C. CW
D. Phone

2H-1-2.1 What emission type describes narrow-band direct-printing telegraphy emissions?
A. RTTY
B. Image
C. CW
D. Phone

2H-1-2.2 What keying method is used to transmit RTTY messages?
A. Frequency-shift keying of a radio-frequency signal
B. On/off keying of a radio-frequency signal
C. Digital pulse-code keying of an unmodulated carrier
D. On/off keying of an audio-frequency signal

2H-1-3.1 What emission type describes frequency-modulated voice transmissions?
A. FM phone
B. Image
C. CW
D. Single-sideband phone

2H-1-4.1 What emission type describes single-sideband suppressed-carrier (SSB) voice transmissions?
A. FM phone
B. Image
C. CW
D. Single-sideband phone

2H-2.1 What does the term *key click* mean?
A. The mechanical noise caused by closing a straight key too hard
B. The clicking noise from an excessively square CW keyed waveform
C. The sound produced in a receiver from a CW signal faster than 20 WPM
D. The sound of a CW signal being copied on an AM receiver

2H-2.2 How can key clicks be eliminated?
A. By reducing your keying speed to less than 20 WPM
B. By increasing power to the maximum allowable level
C. By using a power supply with better regulation
D. By using a key-click filter

2H-3.1 What does the term *chirp* mean?
A. A distortion in the receiver audio circuits
B. A high-pitched audio tone transmitted with a CW signal
C. A slight shift in oscillator frequency each time a CW transmitter is keyed
D. A slow change in transmitter frequency as the circuit warms up

10

8-4-91

2H-3.2 What can be done to the power supply of a CW transmitter to avoid chirp?
A. Resonate the power supply filters
B. Regulate the power supply output voltages
C. Use a buffer amplifier between the transmitter output and the feed line
D. Hold the power supply current to a fixed value

2H-4.1 What is a common cause of superimposed hum?
A. Using a nonresonant random-wire antenna
B. Sympathetic vibrations from a nearby transmitter
C. Improper neutralization of the transmitter output stage
D. A defective filter capacitor in the power supply

2H-4.2 What type of problem can a bad power-supply filter capacitor cause in a transmitter or receiver?
A. Sympathetic vibrations in nearby receivers
B. A superimposed hum or buzzing sound
C. Extreme changes in antenna resonance
D. Imbalance in the mixers

One question must be from the following:

2H-5.1 What is the 4th harmonic of a 7160-kHz signal?
A. 28,640 kHz
B. 35,800 kHz
C. 28,160 kHz
D. 1790 kHz

Pg 4 HO#1 Pg 3

2H-5.2 You receive an FCC Notice of Violation stating that your station was heard on 21,375 kHz. At the time listed on the notice, you were operating on 7125 kHz. What is a possible cause of this violation?
A. Your transmitter has a defective power-supply filter capacitor
B. Your CW keying speed was excessively fast
C. Your transmitter was radiating excess harmonic signals
D. Your transmitter has a defective power-supply filter choke

2H-6.1 What may happen to body tissues that are exposed to large amounts of UHF or microwave RF energy?
A. The tissue may be damaged because of the heat produced
B. The tissue may suddenly be frozen
C. The tissue may be immediately destroyed because of the Maxwell Effect
D. The tissue may become less resistant to cosmic radiation

Pg 7

2H-6.2 What precaution should you take before working near a high-gain UHF or microwave antenna (such as a parabolic, or dish antenna)?
A. Be certain the antenna is FCC type accepted
B. Be certain the antenna and transmitter are properly grounded
C. Be certain the transmitter cannot be operated
D. Be certain the antenna safety interlocks are in place

Pg 7

2H-6.3 You are installing a VHF or UHF mobile radio in your vehicle. What is the best location to mount the antenna on the vehicle to minimize any danger from RF exposure to the driver or passengers?
A. In the middle of the roof
B. Along the top of the windshield
C. On either front fender
D. On the trunk lid

Discussed during class

2H-7.1 You discover that your tube-type transmitter power amplifier is radiating spurious emissions. What is the most likely cause of this problem?
A. Excessively fast keying speed
B. Undermodulation
C. Improper neutralization
D. Tank-circuit current dip at resonance

2H-7.2 Your transmitter radiates signals outside the amateur band where you are transmitting. What term describes this radiation?
A. Off-frequency emissions
B. Transmitter chirp
C. Incidental radiation
D. Spurious emissions

2H-7.3 What problem can occur if you operate your transmitter without the cover and other shielding in place?
A. Your transmitter can radiate spurious emissions
B. Your transmitter may radiate a "chirpy" signal
C. The final amplifier efficiency of your transmitter may decrease
D. You may cause splatter interference to other stations operating on nearby frequencies

2H-7.4 What type of interference will you cause if you operate your SSB transmitter with the microphone gain adjusted too high?
A. You may cause digital interference to computer equipment in your neighborhood
B. You may cause splatter interference to other stations operating on nearby frequencies
C. You may cause atmospheric interference in the air around your antenna
D. You may cause processor interference to the microprocessor in your rig

HO#2 Pg 2

2H-7.5 What may happen if you adjust the microphone gain or deviation control on your FM transmitter too high?
A. You may cause digital interference to computer equipment in your neighborhood
B. You may cause interference to other stations operating on nearby frequencies
C. You may cause atmospheric interference in the air around your antenna
D. You may cause processor interference to the microprocessor in your rig

HO#2 Pg 3

2H-7.6 What type of interference can excessive amounts of speech processing in your SSB transmitter cause?
A. You may cause digital interference to computer equipment in your neighborhood
B. You may cause splatter interference to other stations operating on nearby frequencies
C. You may cause atmospheric interference in the air around your antenna
D. You may cause processor interference to the microprocessor in your rig

HO#2 Pg 2

7

8-4-91

Subelement 2I—Antennas and Feed Lines (3 Questions)

One question must be from the following:

2I-1.1 What is the approximate length (in feet) of a half-wavelength dipole antenna for 3725 kHz?
A. 126 ft
B. 81 ft
C. 63 ft
D. 40 ft

2I-1.2 What is the approximate length (in feet) of a half-wavelength dipole antenna for 7125 kHz?
A. 84 ft
B. 42 ft
C. 33 ft
D. 66 ft

2I-1.3 What is the approximate length (in feet) of a half-wavelength dipole antenna for 21,125 kHz?
A. 44 ft
B. 28 ft
C. 22 ft
D. 14 ft

2I-1.4 What is the approximate length (in feet) of a half-wavelength dipole antenna for 28,150 kHz?
A. 22 ft
B. 11 ft
C. 17 ft
D. 34 ft

2I-1.5 How is the approximate length (in feet) of a half-wavelength dipole antenna calculated?
A. By substituting the desired operating frequency for f in the formula:

$$\frac{150}{f \text{ (in MHz)}}$$

B. By substituting the desired operating frequency for f in the formula:

$$\frac{234}{f \text{ (in MHz)}}$$

C. By substituting the desired operating frequency for f in the formula:

$$\frac{300}{f \text{ (in MHz)}}$$

D. By substituting the desired operating frequency for f in the formula:

$$\frac{468}{f \text{ (in MHz)}}$$

2I-2.1 What is the approximate length (in feet) of a quarter-wavelength vertical antenna for 3725 kHz?
A. 20 ft
B. 32 ft
C. 40 ft
D. 63 ft

2I-2.2 What is the approximate length (in feet) of a quarter-wavelength vertical antenna for 7125 kHz?
A. 11 ft
B. 16 ft
C. 21 ft
D. 33 ft

2I-2.3 What is the approximate length (in feet) of a quarter-wavelength vertical antenna for 21,125 kHz?
A. 7 ft
B. 11 ft
C. 14 ft
D. 22 ft

2I-2.4 What is the approximate length (in feet) of a quarter-wavelength vertical antenna for 28,150 kHz?
A. 5 ft
B. 8 ft
C. 11 ft
D. 17 ft

2I-2.5 When a vertical antenna is lengthened, what happens to its resonant frequency?
A. It decreases
B. It increases
C. It stays the same
D. It doubles

2I-3.1 Why do many amateurs use a 5/8-wavelength vertical antenna rather than a 1/4-wavelength vertical antenna for their VHF or UHF mobile stations?
A. A 5/8-wavelength antenna can handle more power than a 1/4-wavelength antenna
B. A 5/8-wavelength antenna has more gain than a 1/4-wavelength antenna
C. A 5/8-wavelength antenna exhibits less corona loss than a 1/4-wavelength antenna
D. A 5/8-wavelength antenna looks more like a CB antenna, so it does not attract as much attention as a 1/4-wavelength antenna

2I-3.2 What type of radiation pattern is produced by a 5/8-wavelength vertical antenna?
A. A pattern with most of the transmitted signal concentrated in two opposite directions
B. A pattern with the transmitted signal going equally in all compass directions, with most of the radiation going high above the horizon
C. A pattern with the transmitted signal going equally in all compass directions, with most of the radiation going close to the horizon
D. A pattern with more of the transmitted signal concentrated in one direction than in other directions

One question must be from the following:

2I-4-1.1 What type of antenna produces a radiation pattern with more of the transmitted signal concentrated in a particular direction than in other directions?
A. A dipole antenna
B. A vertical antenna
C. An isotropic antenna
D. A beam antenna

2I-4-1.2 What type of radiation pattern is produced by a Yagi antenna?
A. A pattern with the transmitted signal spread out equally in all compass directions
B. A pattern with more of the transmitted signal concentrated in one direction than in other directions
C. A pattern with most of the transmitted signal concentrated in two opposite directions
D. A pattern with most of the transmitted signal concentrated at high radiation angles

4

8-4-91

2I-4-1.3 Approximately how long (in wavelengths) is the driven element of a Yagi antenna?
A. 1/4 wavelength
B. 1/3 wavelength
C. 1/2 wavelength
D. 1 wavelength

HO2 pg3 just elec

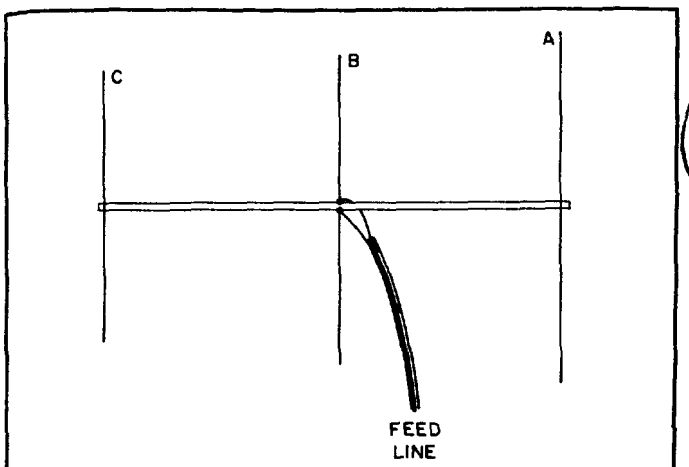

(Refer to Questions 2I-4-2.1 through 2I-4-2.3)

Figure 2I-4

2I-4-2.1 On the Yagi antenna shown in Figure 2I-4, what is the name of section B?
A. Director
B. Reflector
C. Boom
D. Driven element

see prev

2I-4-2.2 On the Yagi antenna shown in Figure 2I-4, what is the name of section C?
A. Director
B. Reflector
C. Boom
D. Driven element

see prev

2I-4-2.3 On the Yagi antenna shown in Figure 2I-4, what is the name of section A?
A. Director
B. Reflector
C. Boom
D. Driven element

see prev

2I-4-2.4 What are the names of the elements in a 3-element Yagi antenna?
A. Reflector, driven element and director
B. Boom, mast and reflector
C. Reflector, base and radiator
D. Driven element, trap and feed line

see prev

2I-5.1 How should the antenna on a hand-held transceiver be positioned while you are transmitting?
A. Away from your head and away from others standing nearby
B. Pointed in the general direction of the repeater or other station you are transmitting to
C. Pointed in a general direction 90 degrees away from the repeater or other station you are transmitting to
D. With the top of the antenna angled down slightly to take the most advantage of ground reflections

Pg 7

2I-5.2 Why should you always locate your antennas so that no one can come in contact with them while you are transmitting?
A. Such contact can detune the antenna, causing television interference
B. To prevent RF burns and excessive exposure to RF energy
C. The antenna is more likely to radiate harmonics when it is touched
D. Such contact may reflect the transmitted signal back to the transmitter, damaging the final amplifier

Pg 7

2I-5.3 You are going to purchase a new antenna for your VHF or UHF hand-held radio. Which type of antenna is the best choice to produce a radiation pattern that will be least hazardous to your face and eyes?
A. A 1/8-wavelength whip
B. A 7/8-wavelength whip
C. A 1/2-wavelength whip
D. A short, helically wound, flexible antenna

One question must be from the following:

2I-6.1 What is a *coaxial cable*?
A. Two parallel conductors encased along the edges of a flat plastic ribbon
B. Two parallel conductors held at a fixed distance from each other by insulating rods
C. Two conductors twisted around each other in a double spiral
D. A center conductor encased in insulating material which is covered by a conducting sleeve or shield

Pg 4

2I-6.2 What kind of antenna feed line is constructed of a center conductor encased in insulation which is then covered by an outer conducting shield and weatherproof jacket?
A. Twin lead
B. Coaxial cable
C. Open-wire feed line
D. Wave guide

Pg 4

2I-6.3 What are some advantages of using coaxial cable as an antenna feed line?
A. It is easy to make at home, and it has a characteristic impedance in the range of most common amateur antennas
B. It is weatherproof, and it has a characteristic impedance in the range of most common amateur antennas
C. It can be operated at a higher SWR than twin lead, and it is weatherproof
D. It is unaffected by nearby metallic objects, and has a characteristic impedance that is higher than twin lead

2I-6.4 What commonly available antenna feed line can be buried directly in the ground for some distance without adverse effects?
A. Twin lead
B. Coaxial cable
C. Parallel conductor
D. Twisted pair

HO#1 Pg 3

2I-6.5 When an antenna feed line must be located near grounded metal objects, which commonly available feed line should be used?
A. Twisted pair
B. Twin lead
C. Coaxial cable
D. Ladder-line

HO#1 Pg 3

7

8-4-91

2I-7.1 What is parallel-conductor feed line?
A. Two conductors twisted around each other in a double spiral
B. Two parallel conductors held a uniform distance apart by insulating material
C. A conductor encased in insulating material which is then covered by a conducting shield and a weatherproof jacket
D. A metallic pipe whose diameter is equal to or slightly greater than the wavelength of the signal being carried

2I-7.2 How can *TV-type twin lead* be used as a feed line?
A. By carefully running the feed line parallel to a metal post to ensure self resonance
B. TV-type twin lead cannot be used in an amateur station
C. By installing an impedance-matching network between the transmitter and feed line
D. By using a high-power amplifier and installing a power attenuator between the transmitter and feed line

2I-7.3 What are some advantages of using parallel-conductor feed line?
A. It has a lower characteristic impedance than coaxial cable, and will operate at a higher SWR than coaxial cable
B. It will operate at a higher SWR than coaxial cable, and it is unaffected by nearby metal objects
C. It has a lower characteristic impedance than coaxial cable, and has less loss than coaxial cable
D. It will operate at higher SWR than coaxial cable and it has less loss than coaxial cable

pg 8

2I-7.4 What are some disadvantages of using parallel-conductor feed line?
A. It is affected by nearby metallic objects, and it has a characteristic impedance that is too high for direct connection to most amateur transmitters
B. It is more difficult to make at home than coaxial cable and it cannot be operated at a high SWR
C. It is affected by nearby metallic objects, and it cannot handle the power output of a typical amateur transmitter
D. It has a characteristic impedance that is too high for direct connection to most amateur transmitters, and it will operate at a high SWR

2I-7.5 What kind of antenna feed line is constructed of two conductors maintained a uniform distance apart by insulated spreaders?
A. Coaxial cable
B. Ladder-line open conductor line
C. Twin lead in a plastic ribbon
D. Twisted pair

HO #1 pg 3

2I-8.1 A certain antenna has a feed-point impedance of 35 ohms. You want to use a 50-ohm-impedance coaxial cable to feed this antenna. What type of device will you need to connect between the antenna and the feed line?
A. A balun
B. An SWR bridge
C. An impedance matching device
D. A low-pass filter

2I-8.2 A certain antenna system has an impedance of 1000 ohms on one band. What must you use to connect this antenna system to the 50-ohm output on your transmitter?
A. A balun
B. An SWR bridge
C. An impedance matching device
D. A low-pass filter

2I-9.1 The word *balun* is a contraction for what phrase?
A. Balanced-antenna-lobe use network
B. Broadband-amplifier linearly unregulated
C. Balanced unmodulator
D. Balanced to unbalanced

2I-9.2 Where would you install a balun if you wanted to feed your dipole antenna with 450-ohm parallel-conductor feed line?
A. At the transmitter end of the feed line
B. At the antenna feed point
C. In only one conductor of the feed line
D. From one conductor of the feed line to ground

2I-9.3 Where might you install a balun if you wanted to feed your dipole antenna with 50-ohm coaxial cable?
A. You might install a balun at the antenna feed point
B. You might install a balun at the transmitter output
C. You might install a balun ½ wavelength from the transmitter
D. You might install baluns in the middle of each side of the dipole

2I-10-1.1 A four-element Yagi antenna is mounted with its elements parallel to the ground. A signal produced by this antenna will have what type of polarization?
A. Broadside polarization
B. Circular polarization
C. Horizontal polarization
D. Vertical polarization

2I-11-1.1 A four-element Yagi antenna is mounted with its elements perpendicular to the ground. A signal produced by this antenna will have what type of polarization?
A. Broadside polarization
B. Circular polarization
C. Horizontal polarization
D. Vertical polarization

10

ELEMENT 2 ANSWER KEY

SUBELEMENT 2A

Numbers in this section refer to pages in *Now You're Talking!*

2A-1.1	A	2-3
2A-1.2	D	2-3
2A-1.3	D	2-3
2A-1.4	B	2-3
2A-2.1	C	2-4
2A-2.2	A	2-4
2A-3.1	A	2-3
2A-3.2	D	2-4
2A-4.1	B	2-4
2A-4.2	D	2-5
2A-5.1	C	2-5
2A-5.2	B	2-5
2A-6.1	B	2-5
2A-6.2	C	2-5
2A-7.1	D	2-4
2A-8.1	A	2-5
2A-8.2	D	2-5
2A-9.1	D	2-6
2A-9.2		(withdrawn)
2A-9.3	B	2-6
2A-10.1		(withdrawn)
2A-10.2	C	2-6
2A-10.3	A	2-6
2A-10.4	C	2-6
2A-10.5	B	2-6
2A-10.6	C	2-6
2A-10.7	A	2-6
2A-10.8	B	2-6
2A-10.9	C	2-6
2A-10.10	D	2-6
2A-11.1	A	2-6
2A-11.2	B	2-6
2A-12.1	C	2-9
2A-12.2	A	2-9
2A-12.3	D	2-9
2A-13.1	A	2-6
2A-14.1	B	2-11
2A-15.1	C	2-14
2A-15.2	D	2-14
2A-15.3	A	2-14
2A-15.4	B	2-14
2A-15.5	D	2-14
2A-16.1	A	2-5
2A-17.1	A	2-7
2A-17.2	A	2-7
2A-17.3	A	2-7
2A-17.4	A	2-7
2A-17.5		(withdrawn)
2A-17.6	D	2-7
2A-17.7	D	2-7
2A-17.8	C	2-7
2A-17.9	C	2-7
2A-17.10	D	2-7
2A-17.11	D	2-7
2A-17.12	D	2-7
2A-17.13	C	2-7
2A-18.1	D	2-7
2A-18.2	C	2-7
2A-18.3	C	2-7
2A-18.4	C	2-7
2A-18.5	C	2-7
2A-19.1	C	2-7
2A-19.2	B	2-7
2A-19.3	C	2-7
2A-19.4	D	2-7
2A-19.5	B	2-7
2A-20.1	C	2-7
2A-20.2	C	2-7
2A-20.3	D	2-7
2A-21.1	C	2-5
2A-21.2	A	2-5
2A-21.3	D	2-5
2A-21.4	B	2-5
2A-22.1	C	2-5
2A-22.2	A	2-5
2A-23.1	B	2-5
2A-24.1	B	2-5
2A-25.1	C	2-5
2A-26.1	D	2-5
2A-27.1	C	2-15
2A-27.2	B	2-15
2A-27.3	B	2-15
2A-27.4	A	2-15
2A-27.5	B	2-15
2A-27.6	C	2-15
2A-27.7	B	2-15
2A-28.1	D	2-15
2A-28.2	C	2-15
2A-29.1	B	2-17
2A-29.2	D	2-17
2A-30.1	A	2-16
2A-30.2	B	2-16
2A-30.3	D	2-16
2A-31.1	D	2-16
2A-32.1	A	2-16
2A-32.2	D	2-16
2A-33.1	A	2-16
2A-34.1	A	2-16
2A-34.2	B	2-16
2A-34.3	D	2-16
2A-35.1	A	2-17
2A-36.1	C	2-17
2A-36.2	D	2-17
2A-37.1	A	2-17
2A-37.2	C	2-17
2A-38.1	C	2-15
2A-38.2	D	2-15
2A-38.3	A	2-15
2A-39.1	C	2-17
2A-39.2	B	2-17
2A-39.3	B	2-17
2A-40.1	C	2-17
2A-40.2	D	2-17
2A-40.3	D	2-17

SUBELEMENT 2B

2B-1-1.1	A	9-8
2B-1-1.2	C	9-4
2B-1-1.3	C	9-12
2B-1-2.1	D	9-11
2B-2-1.1	A	9-8
2B-2-1.2	B	9-12
2B-2-2.1	C	9-8
2B-2-3.1	C	9-12
2B-2-3.2	D	9-12
2B-2-3.3	A	9-12
2B-2-3.4	B	9-13
2B-2-3.5	C	9-13
2B-2-4.1	D	9-8
2B-2-4.2	A	9-13
2B-2-4.3	A	9-13
2B-2-5.1	D	9-12
2B-2-5.2	B	9-12
2B-2-5.3	A	9-12
2B-2-6.1	B	9-9
2B-2-6.2	C	9-9
2B-2-6.3	D	9-9
2B-2-6.4	A	9-9
2B-2-6.5	B	9-9
2B-3-1.1	C	9-14
2B-3-1.2	D	9-14
2B-3-2.1	A	9-14
2B-3-2.2	C	9-14
2B-3-2.3	A	9-14
2B-3-2.4	D	9-14
2B-3-2.5	A	9-14
2B-3-2.6	C	9-14
2B-3-2.7	A	9-14
2B-3-2.8	D	9-14
2B-3-2.9	B	9-14
2B-3-2.10	A	9-14
2B-3-2.11	C	9-14
2B-4-1.1	B	9-24

2B-4-2.1	B	9-24
2B-5-1.1	C	9-27
2B-5-1.2	D	9-27
2B-5-2.1	A	9-29
2B-5-2.2	B	9-31
2B-6-1.1	C	9-19
2B-6-2.1	D	9-18
2B-6-3.1	A	9-18
2B-6-4.1	B	9-19
2B-6-5.1	C	9-19
2B-6-5.2	D	9-19

SUBELEMENT 2C

2C-1.1	A	9-3
2C-1.2	B	9-3
2C-2.1	D	9-3
2C-2.2	B	9-3
2C-2.3	B	9-3
2C-2.4	A	9-3
2C-3.1	A	9-3
2C-3.2	B	9-3
2C-3.3	D	9-3
2C-3.4	A	9-4
2C-3.5	C	9-4
2C-3.6	D	9-3
2C-4.1	C	9-3
2C-4.2	D	9-3
2C-5.1	A	9-3
2C-5.2	B	9-3
2C-6.1	C	9-5
2C-6.2	C	9-5

SUBELEMENT 2D

2D-1.1	B	8-9
2D-1.2	A	8-9
2D-2.1	D	8-9
2D-2.2	C	8-9
2D-2.3	D	8-9
2D-2.4	B	8-9
2D-3.1	A	8-3
2D-3.2	C	8-3
2D-3.3	B	8-3
2D-3.4	C	8-3
2D-4.1	B	8-11
2D-4.2	A	8-10
2D-4.3	C	8-10
2D-4.4	A	8-10
2D-4.5	B	8-10
2D-4.6	B	8-10
2D-5.1	D	8-9
2D-5.2	A	8-9
2D-6.1	D	7-21
2D-6.2	D	7-21
2D-6.3	A	7-21
2D-6.4	D	7-21
2D-6.5	A	7-21
2D-7-1.1	C	8-17
2D-7-1.2	D	8-17
2D-7-2.1	B	7-6
2D-7-2.2	C	7-6
2D-7-2.3	D	7-6
2D-7-2.4	C	7-6
2D-7-3.1	A	7-7
2D-7-3.2	A	7-6
2D-7-3.3	B	7-7
2D-7-3.4	C	7-7
2D-8-1.1	C	10-4
2D-8-1.2	B	10-4
2D-8-1.3	C	10-4
2D-8-1.4	B	10-5
2D-8-2.1	A	10-4
2D-8-2.2	A	10-4
2D-8-2.3	A	10-4
2D-8-2.4	C	10-6
2D-8-2.5	D	10-4
2D-8-2.6	B	10-5
2D-8-3.1	A	10-3
2D-8-3.2	B	10-3

SUBELEMENT 2E

2E-1-1.1	C	3-2
2E-1-2.1	B	3-2
2E-1-2.2	D	3-2
2E-1-3.1	B	3-2
2E-1-3.2	D	3-2
2E-1-4.1	B	3-13
2E-1-5.1	C	3-2
2E-1-5.2	C	3-2
2E-1-6.1	B	3-2
2E-1-7.1	B	3-2
2E-2-1.1	D	3-4
2E-2-2.1	C	3-5
2E-3-1.1	A	3-4
2E-3-1.2	D	3-4
2E-3-1.3	C	3-4
2E-3-2.1	A	3-4
2E-4.1	C	3-5
2E-5.1	A	3-5
2E-6-1.1	D	3-6
2E-6-1.2	A	3-6
2E-6-2.1	D	3-6
2E-7.1	C	3-7
2E-7.2	C	3-7
2E-7.3	B	3-7
2E-7.4	C	3-7
2E-8.1	D	3-10
2E-8.2	A	3-10
2E-9-1.1	C	3-10
2E-9-1.2	C	3-10
2E-9-2.1	B	3-10
2E-10.1	C	3-9
2E-11.1	D	3-9
2E-12-1.1	B	3-12
2E-12-2.1	A	3-12
2E-12-3.1	D	3-12
2E-12-3.2	A	3-12
2E-12-3.3	A	3-12
2E-12-4.1	B	3-12
2E-12-4.2	A	3-12
2E-12-4.3	B	3-12
2E-12-5.1	C	3-12
2E-12-5.2	B	3-12
2E-13.1	C	3-12
2E-13.2	D	3-13

SUBELEMENT 2F

2F-1.1	B	4-2
2F-1.2	C	4-2
2F-1.3	C	4-2
2F-2.1	A	4-2
2F-2.2	A	4-2
2F-2.3	B	4-2
2F-2.4	D	4-2
2F-2.5	A	4-2
2F-3.1	C	4-3
2F-4.1	C	4-4
2F-4.2	B	4-4
2F-5.1	D	4-4
2F-5.2	B	4-4
2F-5.3	A	4-4
2F-5.4	D	4-4
2F-6.1	D	4-4
2F-7.1	C	4-5
2F-7.2	A	4-5
2F-7.3	C	4-5
2F-7.4	B	4-5
2F-8.1	A	4-6

SUBELEMENT 2G

2G-1-1.1	B	5-2
2G-1-1.2	C	5-2
2G-1-1.3	D	5-2
2G-1-1.4	A	5-3
2G-1-1.5	D	5-3
2G-1-2.1	B	5-3
2G-1-2.2	A	5-4
2G-1-2.3	B	5-3
2G-1-2.4	D	5-3
2G-1-2.5	D	5-3
2G-2.1	B	5-4
2G-2.2	C	5-4
2G-2.3	C	5-3
2G-3.1	D	5-4
2G-3.2	D	5-4
2G-4.1	A	5-5
2G-4.2	C	5-5
2G-5.1	A	5-5
2G-5.2	A	5-5
2G-5.3	C	5-5

SUBELEMENT 2H

2H-1-1.1	B	2-7

2H-1-1.2	C	2-7
2H-1-2.1	A	2-7
2H-1-2.2	A	2-7
2H-1-3.1	A	2-7
2H-1-4.1	D	2-7
2H-2.1	B	10-6
2H-2.2	D	10-6
2H-3.1	C	10-6
2H-3.2	B	10-6
2H-4.1	D	10-7
2H-4.2	B	10-7
2H-5.1	A	10-1
2H-5.2	C	10-1
2H-6.1	A	8-11
2H-6.2	C	8-11
2H-6.3	A	8-11
2H-7.1	C	10-3
2H-7.2	D	10-1
2H-7.3	A	10-6
2H-7.4	B	9-20
2H-7.5	B	9-20
2H-7.6	B	9-20

SUBELEMENT 2I

2I-1.1	A	7-7
2I-1.2	D	7-7
2I-1.3	C	7-7
2I-1.4	C	7-7
2I-1.5	D	7-7
2I-2.1	D	7-14
2I-2.2	D	7-14
2I-2.3	B	7-14
2I-2.4	B	7-14
2I-2.5	A	7-14
2I-3.1	B	7-21
2I-3.2	C	7-21
2I-4-1.1	D	7-19
2I-4-1.2	B	7-19
2I-4-1.3	C	7-20
2I-4-2.1	D	7-20
2I-4-2.2	A	7-20
2I-4-2.3	B	7-20
2I-4-2.4	A	7-20
2I-5.1	A	7-21
2I-5.2	B	7-21
2I-5.3	C	7-22
2I-6.1	D	7-2
2I-6.2	B	7-2
2I-6.3	B	7-2
2I-6.4	B	7-2
2I-6.5	C	7-2
2I-7.1	B	7-3
2I-7.2	C	7-3
2I-7.3	D	7-3
2I-7.4	A	7-4
2I-7.5	B	7-5
2I-8.1	C	7-4
2I-8.2	C	7-4
2I-9.1	D	7-5
2I-9.2	A	7-5
2I-9.3	A	7-5
2I-10-1.1	C	7-21
2I-11-1.1	D	7-24

8-4-91 Technician

325 questions in Tech pool.

123 reviewed = 37.8%

202 - not reviewed = 62.2%

8-4-91

Chapter 13

Element 3A Question Pool —With Answers

DON'T START HERE

This chapter contains the complete question pool for the Element 3A exam. Element 3A is part of the Technician exam. To earn a Technician license, you must also pass the Element 2 exam (Chapter 12). The Technician license does not require a code test.

Before you read the questions and answers printed in this chapter, be sure to read the text in the previous chapters. Use these questions as review exercises, when the text tells you to study them. Don't try to memorize all the questions and answers.

HOW MANY QUESTIONS?

The FCC specifies that an Element 3A exam must include 25 questions, and also specifies that a certain number of questions from each subelement must appear on the exam. The number of questions to be selected from each section is printed at the beginning of each subelement, and is summarized in Table 13-1.

Table 13-1
Technician Exam Content

Subelement	3AA	3AB	3AC	3AD	3AE	3AF	3AG	3AH	3AI
Number of Questions	5	3	3	4	2	2	1	2	3

WHO PICKS THE QUESTIONS?

The FCC allows Volunteer-Examiner teams to select the questions that will be used on amateur exams. If your test is coordinated by the ARRL/VEC, however, your test will be prepared by the VEC. The questions with multiple-choice answers and distractors (incorrect answers) printed here were released by the Volunteer Examiner Coordinator's Question Pool Committee for use until further notice. Most VECs have agreed to use these multiple-choice answers and distractors. If your test is coordinated by the ARRL/VEC or one of the other VECs using these multiple-choice answers, they will appear on your exam exactly as they are printed here. Some VECs may use the questions printed here with different answers and/or distractors; check with the VEC coordinating your test session.

PAGE REFERENCES

We have listed page references along with the answers in the answer key section of this chapter. These page numbers indicate where you will find the text discussion related to each question. If you have any problems with a question, refer to the page listed for that question. You may have to study beyond the listed page numbers.

Good luck with your studies.

Withdrawn Questions

FCC Rules changes sometimes make it necessary to withdraw certain questions from the pool. Withdrawn questions are noted in the following pages.

- Pg # indicates Pg # in my notes where subject was discussed
- (#) indicates no review of material
- Q # indicates Q # on test
- HO # - refer to Handout

8-4-91

SUBELEMENT 3AA—Commission's Rules
(5 Exam Questions)

3AA-1.1 What is the *control point* of an amateur station?
A. The location at which the control operator function is performed
B. The operating position of any amateur station operating as a repeater user station
C. The physical location of any Amateur Radio transmitter, even if it is operated by radio link from some other location
D. The variable frequency oscillator (VFO) of the transmitter

3AA-1.2 What is the term for the location at which the control operator function is performed?
A. The operating desk
B. The control point
C. The station location
D. The manual control location

3AA-2.1 This question has been withdrawn.

3AA-2.2 Which operator licenses authorize privileges on 52.525 MHz?
A. Extra, Advanced only
B. Extra, Advanced, General only
C. Extra, Advanced, General, Technician only
D. Extra, Advanced, General, Technician, Novice

HO#2 Pg 1

3AA-2.3 Which operator licenses authorize privileges on 146.52 MHz?
A. Extra, Advanced, General, Technician, Novice
B. Extra, Advanced, General, Technician only
C. Extra, Advanced, General only
D. Extra, Advanced only

#HO2 Pg 1

3AA-2.4 Which operator licenses authorize privileges on 223.50 MHz?
A. Extra, Advanced, General, Technician, Novice
B. Extra, Advanced, General, Technician only
C. Extra, Advanced, General only
D. Extra, Advanced only

HO#2 Pg 1

3AA-2.5 Which operator licenses authorize privileges on 446.0 MHz?
A. Extra, Advanced, General, Technician, Novice
B. Extra, Advanced, General, Technician only
C. Extra, Advanced, General only
D. Extra, Advanced only

HO#2 Pg 1

3AA-3.1 How often do amateur service licenses generally need to be renewed?
A. Every 10 years
B. Every 5 years
C. Every 2 years
D. They are lifetime licenses

Q3 Pg 5

3AA-3.2 The FCC currently issues amateur licenses carrying 10-year terms. What is the "grace period" during which the FCC will renew an expired 10-year license?
A. 2 years
B. 5 years
C. 10 years
D. There is no grace period

HO#2 Pg 1

3AA-3.3 What action would you take to modify your operator/primary station license?
A. Properly fill out FCC Form 610 and send it to the FCC in Gettysburg, PA
B. Properly fill out FCC Form 610 and send it to the nearest FCC field office
C. Write the FCC at their nearest field office
D. There is no need to modify an amateur license between renewals

3AA-4.1 On what frequencies within the 6-meter wavelength band may FM phone emissions be transmitted?
A. 50.0-54.0 MHz only
B. 50.1-54.0 MHz only
C. 51.0-54.0 MHz only
D. 52.0-54.0 MHz only

3AA-4.2 On what frequencies within the 2-meter wavelength band may FM image emissions be transmitted?
A. 144.1-148.0 MHz only
B. 146.0-148.0 MHz only
C. 144.0-148.0 MHz only
D. 146.0-147.0 MHz only

3AA-4.3 What emission type may always be used for station identification, regardless of the transmitting frequency?
A. CW
B. RTTY
C. MCW
D. Phone

3AA-5.1 If you are using a frequency within a band designated to the amateur service on a secondary basis and another station assigned to a primary service on that band causes interference, what action should you take?
A. Notify the FCC's regional Engineer in Charge of the interference
B. Increase your transmitter's power to overcome the interference
C. Attempt to contact the station and request that it stop the interference
D. Change frequencies; you may also be causing interference to the other station and that would be a violation of FCC rules

3AA-5.2 What is the basic principle of frequency sharing between two stations allocated to a primary service within a frequency band, but each in a different ITU Region or Subregion?
A. The station with a control operator holding a lesser class of license must yield the frequency to the station with a control operator holding a higher class license
B. The station with a lower power output must yield the frequency to the station with a higher power output
C. Both stations have an equal right to operate on the frequency
D. Stations in ITU Regions 1 and 3 must yield the frequency to stations in ITU Region 2

3AA-6-1.1 FCC Rules specify the maximum transmitter power that you may use with your amateur station. At what point in your station is the transmitter power measured?
A. By measuring the final amplifier supply voltage inside the transmitter or amplifier
B. By measuring the final amplifier supply current inside the transmitter or amplifier
C. At the antenna terminals of the transmitter or amplifier
D. On the antenna itself, after the feed line

on HO — not office

9

8-4-91

3AA-6-1.2 What is the term used to define the average power supplied to the antenna transmission line during one RF cycle at the crest of the modulation envelope?
A. Peak transmitter power
B. Peak output power
C. Average radio-frequency power
D. Peak envelope power

Pg 9 Q2

3AA-6-2.1 Notwithstanding the numerical limitations in the FCC Rules, how much transmitting power shall be used by an amateur station?
A. There is no regulation other than the numerical limits
B. The minimum power level required to achieve S9 signal reports
C. The minimum power necessary to carry out the desired communication
D. The maximum power available, as long as it is under the allowable limit

HO not clear

3AA-6-3.1 What is the maximum transmitting power permitted an amateur station on 146.52 MHz?
A. 200 watts PEP output
B. 500 watts ERP
C. 1000 watts DC input
D. 1500 watts PEP output

3AA-6-4.1 What is the maximum transmitting power permitted an amateur station in beacon operation?
A. 10 watts PEP output
B. 100 watts PEP output
C. 500 watts PEP output
D. 1500 watts PEP output

3AA-7-1.1 What is the maximum sending speed permitted for a RTTY transmission between 28 and 50 MHz?
A. 56 kilobauds
B. 19.6 kilobauds
C. 1200 bauds
D. 300 bauds

3AA-7-1.2 What is the maximum sending speed permitted for a RTTY transmission between 50 and 220 MHz?
A. 56 kilobauds
B. 19.6 kilobauds
C. 1200 bauds
D. 300 bauds

3AA-7-1.3 What is the maximum sending speed permitted for a RTTY transmission above 220 MHz?
A. 300 bauds
B. 1200 bauds
C. 19.6 kilobauds
D. 56 kilobauds

3AA-7-2.1 What is the maximum frequency shift permitted for RTTY when transmitted below 50 MHz?
A. 100 Hz
B. 500 Hz
C. 1000 Hz
D. 5000 Hz

3AA-7-2.2 What is the maximum frequency shift permitted for RTTY when transmitted above 50 MHz?
A. 100 Hz or the sending speed, in bauds, whichever is greater
B. 500 Hz or the sending speed, in bauds, whichever is greater
C. The FCC rules do not specify a maximum frequency shift above 50 MHz
D. 5000 Hz or the sending speed, in bauds, whichever is greater

3AA-7-3.1 What is the authorized bandwidth of a RTTY, data or multiplexed emission using a specified digital code within the frequency range of 50 to 220 MHz?
A. 20 kHz
B. 50 kHz
C. The total bandwidth shall not exceed that of a single-sideband emission
D. The total bandwidth shall not exceed 10 times that of a CW emission

3AA-7-3.2 What is the authorized bandwidth of a RTTY, data or multiplexed emission using an unspecified digital code within the frequency range of 220 to 450 MHz?
A. 50 kHz
B. 150 kHz
C. 200 kHz
D. 100 kHz

3AA-7-3.3 What is the maximum authorized bandwidth of a RTTY, data or multiplexed emission using an unspecified digital code within the 420 to 450 MHz amateur band?
A. 50 kHz
B. 200 kHz
C. 300 kHz
D. 100 kHz

3AA-8-1.1 How must a control operator who has a Novice license and a Certificate of Successful Completion of Examination for Technician privileges identify the station when transmitting on 146.34 MHz?
A. The new Technician may not operate on 146.34 until his or her new license arrives
B. The licensee gives his or her call sign, followed by any suitable word that denotes the slant mark and the identifier "KT"
C. No special form of identification is needed
D. The license gives his or her call sign and states the location of the VE examination where he or she obtained the certificate of successful completion

3AA-8-2.1 Which language(s) must be used when making the station identification by telephony?
A. The language being used for the contact may be used if it is not English, providing the US has a third-party communications agreement with that country
B. English must be used for identification
C. Any language may be used, if the country which uses that language is a member of the International Telecommunication Union
D. The language being used for the contact must be used for identification purposes

Pg 5 HO #2 pg 1

3AA-8-3.1 What does the FCC recommend to aid correct station identification when using phone?
A. A speech compressor
B. Q signals
C. A recognized phonetic alphabet
D. Unique words of the operator's choice

3AA-9-1.1 What is the term used to describe an amateur station transmitting communications for the purpose of observation of propagation and reception or other related experimental activities?
A. Beacon operation
B. Repeater operation
C. Auxiliary operation
D. Radio control operation

Pg 5

13

8-4-91

3AA-9-2.1 What class of amateur operator license must you hold to operate a beacon station?
A. Technician, General, Advanced or Amateur Extra class
B. General, Advanced or Amateur Extra class
C. Amateur Extra class only
D. Any license class

3AA-10.1 What is the maximum transmitter power an amateur station is permitted when transmitting signals to control a model craft?
A. One watt
B. One milliwatt
C. Two watts
D. Three watts

3AA-10.2 What minimum information must be indicated on the label affixed to a transmitter transmitting signals to control a model craft?
A. Station call sign
B. Station call sign and operating times
C. Station call sign and the station licensee's name and address
D. Station call sign, class of license, and operating times

3AA-10.3 What are the station identification requirements for an amateur station transmitting signals to control a model craft?
A. Once every ten minutes, and at the beginning and end of each transmission
B. Once every ten minutes
C. At the beginning and end of each transmission
D. Station identification is not required provided that a label indicating the station call sign and the station licensee's name and address is affixed to the station transmitter

3AA-10.4 Where must the writing indicating the station call sign and the licensee's name and address be affixed in order to operate under the special rules for radio control of remote model craft and vehicles?
A. It must be in the operator's possession
B. It must be affixed to the transmitter
C. It must be affixed to the craft or vehicle
D. It must be filed with the nearest FCC Field Office

3AA-11-1.1 If an amateur repeater is causing harmful interference to another amateur repeater and a frequency coordinator has coordinated (recommends) the operation of one station and not the other, who is primarily responsible for resolving the interference?
A. The licensee of the non-coordinated (unrecommended) repeater
B. Both repeater licensees
C. The licensee of the coordinated (recommended) repeater
D. The frequency coordinator

3AA-11-1.2 If an amateur repeater is causing harmful interference to another amateur repeater and a frequency coordinator has coordinated (recommends) the operation of both stations, who is primarily responsible for resolving the interference?
A. The licensee of the repeater which has been coordinated for the longest period of time
B. Both repeater licensees
C. The licensee of the repeater which has been coordinated the most recently
D. The frequency coordinator

3AA-11-1.3 If an amateur repeater is causing harmful interference to another amateur repeater and a frequency coordinator has not coordinated the operation of either station, who is primarily responsible for resolving the interference?
A. Both repeater licensees
B. The licensee of the repeater which has been in operation for the longest period of time
C. The licensee of the repeater which has been in operation for the shortest period of time
D. The frequency coordinator

3AA-11-2.1 Under what circumstances does the FCC declare a *temporary state of communication emergency*?
A. When a declaration of war is received from Congress
B. When the maximum usable frequency goes above 28 MHz
C. When communications facilities in Washington, DC, are disrupted
D. When a disaster disrupts normal communications systems in a particular area

3AA-11-2.2 By what means should a request for a declaration of a *temporary state of communication emergency* be initiated?
A. Communication with the FCC Engineer-In-Charge of the affected area
B. Communication with the US senator or congressman for the area affected
C. Communication with the local Emergency Coordinator
D. Communication with the Chief of the FCC Private Radio Bureau

3AA-11-2.3 What information is included in an FCC declaration of a *temporary state of communication emergency*?
A. Designation of the areas affected and of organizations authorized to use radio communications in the affected area
B. Designation of amateur frequency bands for use only by amateurs participating in emergency communications in the affected area, and complete suspension of Novice operating privileges for the duration of the emergency
C. Any special conditions and special rules to be observed during the communication emergency
D. Suspension of amateur rules regarding station identification and business communication

3AA-11-2.4 If a disaster disrupts normal communication systems in an area where the amateur service is regulated by the FCC, what kinds of transmissions are authorized to amateur stations in such an area?
A. Communications which are necessary to meet essential communication needs and facilitate relief actions
B. Communications which allow a commercial business to continue to operate in the affected area
C. Communications for which material compensation has been paid to the amateur operator for delivery into the affected area
D. Communications which are to be used for program production or newsgathering for broadcasting purposes

8

8-4-91

3AA-12.1 What is meant by the term *broadcasting*?
A. Transmissions intended for reception by the general public, either direct or relayed
B. Retransmission by automatic means of programs or signals emanating from any class of station other than amateur
C. The transmission of any one-way radio communication, regardless of purpose or content
D. Any one-way or two-way radio communication involving more than two stations

Pg5

3AA-12.2 Which of the following is an amateur station that cannot automatically retransmit radio signals of other amateur stations?
A. Auxiliary station
B. Repeater station
C. Beacon station
D. Space station

Pg5

3AA-12.3 Which of the following is an amateur station that is permitted to automatically retransmit radio signals of other amateur stations?
A. Beacon station
B. Space station
C. Official bulletin station
D. RACES station

3AA-12.4 What type of radio signals may be directly retransmitted by an amateur station?
A. AM radio station
B. Police or fire department radio station
C. NOAA weather station
D. US Government communications between the space shuttle and associated Earth stations with prior approval from the National Aeronautics and Space Administration (NASA)

3AA-12.5 When may US Government communications between the space shuttle and associated Earth stations be directly retransmitted by an amateur station?
A. After prior approval has been obtained from the FCC in Washington, DC
B. No radio stations other than amateur may be retransmitted in the amateur service
C. After prior approval has been obtained from the National Aeronautics and Space Administration (NASA)
D. After prior approval has been obtained from the nearest FCC Engineer-In-Charge

3AA-13.1 What kinds of one-way communications by amateur stations are not considered broadcasting?
A. All types of one-way communications by amateurs are considered by the FCC as broadcasting
B. Beacon operation, remote control of a device, emergency communications, information bulletins consisting solely of subject matter of direct interest to the amateur service, and telegraphy practice
C. Only code-practice transmissions conducted simultaneously on all available amateur bands below 30 MHz and conducted for more than 40 hours per week are not considered broadcasting
D. Only actual emergency communications during a declared communications emergency are exempt

Pg5 Q5

3AA-13.2 Which of the following one-way communications may not be transmitted in the amateur service?
A. Transmissions to remotely control a device at a distant location
B. Transmissions to assist persons learning or improving their proficiency in Morse code
C. Brief transmissions to make adjustments to the station
D. Transmission of music

HD1 Pg1

3AA-13.3 What kinds of one-way information bulletins may be transmitted by amateur stations?
A. NOAA weather bulletins
B. Commuter traffic reports from local radio stations
C. Regularly scheduled announcements concerning Amateur Radio equipment for sale or trade
D. Messages directed only to amateur operators consisting solely of subject matter of direct interest to the amateur service

Pg5

3AA-13.4 What types of one-way amateur communications may be transmitted by an amateur station?
A. Beacon operation, radio control, code practice, retransmission of other services
B. Beacon operation, radio control, transmitting an unmodulated carrier, NOAA weather bulletins
C. Beacon operation, remote control of a device, information bulletins consisting solely of subject matter of direct interest to the amateur service, telegraphy practice and emergency communications
D. Beacon operation, emergency-drill-practice transmissions, automatic retransmission of NOAA weather transmissions, code practice

Pg5

3AA-14.1 What types of material compensation, if any, may be involved in third-party communications transmitted by an amateur station?
A. Payment of an amount agreed upon by the amateur operator and the parties involved
B. Assistance in maintenance of auxiliary station equipment
C. Donation of amateur equipment to the control operator
D. No compensation may be accepted

HD1 Pg1

3AA-14.2 What types of business communications, if any, may be transmitted by an amateur station on behalf of a third party?
A. The FCC rules specifically prohibit communications with a business for any reason
B. Business communications involving the sale of Amateur Radio equipment
C. Communications to a business may be provided during an emergency as provided by the FCC rules
D. Business communications aiding a broadcast station

4

8-4-91

3AA-14.3 Does the FCC allow third-party messages when communicating with Amateur Radio operators in a foreign country?

A. Third-party messages with a foreign country are only allowed on behalf of other amateurs.
B. Yes, provided the third-party message involves the immediate family of one of the communicating amateurs
C. Under no circumstances may US amateurs exchange third-party messages with an amateur in a foreign country
D. Yes, when communicating with a person in a country with which the US shares a third-party agreement

HO not clear

3AA-15.1 Under what circumstances, if any, may a third party participate in radio communications from an amateur station if the third party is ineligible to be a control operator of one of the stations?

A. A control operator must be present at the control point and continuously monitor and supervise the third party participation. Also, contacts may only be made with amateurs in the US and countries with which the US has a third-party communications agreement
B. A control operator must be present and continuously monitor and supervise the radio communication to ensure compliance with the rules only if contacts are made with amateurs in countries with which the US has no third-party communications agreement
C. A control operator must be present and continuously monitor and supervise the radio communication to ensure compliance with the rules. In addition, the control operator must key the transmitter and make the station identification.
D. A control operator must be present and continuously monitor and supervise the radio communication to ensure compliance with the rules. In addition, if contacts are made on frequencies below 30 MHz, the control operator must transmit the call signs of both stations involved in the contact at 10-minute intervals

HO not clear

3AA-15.2 Where must the control operator be situated when a third party is participating in radio communications from an amateur station?

A. If a radio remote control is used, the control operator may be physically separated from the control point, when provisions are incorporated to shut off the transmitter by remote control
B. If the control operator supervises the third party until he or she is satisfied of the competence of the third party, the control operator may leave the control point
C. The control operator must be present at the control point
D. If the third party holds a valid radiotelegraph license issued by the FCC, no supervision is necessary

HO not clear

3AA-15.3 What must the control operator do while a third party is participating in radio communications?

A. If the third party holds a valid commercial radiotelegraph license, no supervision is necessary
B. The control operator must tune up and down 5 kHz from the transmitting frequency on another receiver, to ensure that no interference is taking place
C. If a radio control link is available, the control operator may leave the room
D. The control operator must continuously monitor and supervise the third party's participation

HO not clear

3AA-15.4 In an exchange of international third-party communications, when is the station identification procedure required?

A. Only at the beginning of the communications
B. At the end of each exchange of communications
C. The station identification procedure is not required during international third-party communications
D. Only at the end of multiple exchanges of communications

3AA-16.1 Under what circumstances, if any, may an amateur station transmit radio communications containing obscene words?

A. Obscene words are permitted when they do not cause interference to any other radio communication or signal
B. Obscene words are prohibited in Amateur Radio transmissions
C. Obscene words are permitted when they are not retransmitted through repeater or auxiliary stations
D. Obscene words are permitted, but there is an unwritten rule among amateurs that they should not be used on the air

HO #1 P21
HO #2 P21

3AA-16.2 Under what circumstances, if any, may an amateur station transmit radio communications containing indecent words?

A. Indecent words are permitted when they do not cause interference to any other radio communication or signal
B. Indecent words are permitted when they are not retransmitted through repeater or auxiliary stations
C. Indecent words are permitted, but there is an unwritten rule among amateurs that they should not be used on the air
D. Indecent words are prohibited in Amateur Radio transmissions

HO #1 P21
HO #2 P21

3AA-16.3 Under what circumstances, if any, may an amateur station transmit radio communications containing profane words?

A. Profane words are permitted when they are not retransmitted through repeater or auxiliary stations
B. Profane words are permitted, but there is an unwritten rule among amateurs that they should not be used on the air
C. Profane words are prohibited in Amateur Radio transmissions
D. Profane words are permitted when they do not cause interference to any other radio communication or signal

HO #1 P21
HO #2 P21

5

8-4-91

3AA-17.1 Which of the following VHF/UHF bands may not be used by Earth stations for satellite communications?
A. 6 meters
B. 2 meters
C. 23 centimeters
D. 70 centimeters

SUBELEMENT 3AB—Operating Procedures (3 Exam Questions)

3AB-1.1 What is the meaning of: "Your report is five seven . . ."?
A. Your signal is perfectly readable and moderately strong
B. Your signal is perfectly readable, but weak
C. Your signal is readable with considerable difficulty
D. Your signal is perfectly readable with near pure tone

3AB-1.2 What is the meaning of: "Your report is three three . . ."?
A. The contact is serial number thirty-three
B. The station is located at latitude 33 degrees
C. Your signal is readable with considerable difficulty and weak in strength
D. Your signal is unreadable, very weak in strength

3AB-1.3 What is the meaning of: "Your report is five nine plus 20 dB . . ."?
A. Your signal strength has increased by a factor of 100
B. Repeat your transmission on a frequency 20 kHz higher
C. The bandwidth of your signal is 20 decibels above linearity
D. A relative signal-strength meter reading is 20 decibels greater than strength 9

3AB-2-1.1 How should a QSO be initiated through a station in repeater operation?
A. Say "breaker, breaker 79"
B. Call the desired station and then identify your own station
C. Call "CQ" three times and identify three times
D. Wait for a "CQ" to be called and then answer it

3AB-2-1.2 Why should users of a station in repeater operation pause briefly between transmissions?
HO #1 pg 4
HO #2 pg 1
A. To check the SWR of the repeater
B. To reach for pencil and paper for third-party communications
C. To listen for any hams wanting to break in
D. To dial up the repeater's autopatch

3AB-2-1.3 Why should users of a station in repeater operation keep their transmissions short and thoughtful?
HO #2 pg 1
A. A long transmission may prevent someone with an emergency from using the repeater
B. To see if the receiving station operator is still awake
C. To give any non-hams that are listening a chance to respond
D. To keep long-distance charges down

3AB-2-1.4 What is the proper procedure to break into an on-going QSO through a station in repeater operation?
A. Wait for the end of a transmission and start calling
B. Shout, "break, break!" to show that you're eager to join the conversation
C. Turn on your 100-watt amplifier and override whoever is talking
D. Send your call sign during a break between transmissions

6

8-4-91

3AB-2-1.5 What is the purpose of repeater operation?
A. To cut your power bill by using someone's higher power system
B. To enable mobile and low-power stations to extend their usable range
C. To reduce your telephone bill
D. To call the ham radio distributor 50 miles away

3AB-2-1.6 What is meant by "making the repeater time out"?
A. The repeater's battery supply has run out
B. The repeater's transmission time limit has expired during a single transmission
C. The warranty on the repeater duplexer has expired
D. The repeater is in need of repairs

3AB-2-1.7 During commuting rush hours, which types of operation should relinquish the use of the repeater?
A. Mobile operators
B. Low-power stations
C. Highway traffic information nets
D. Third-party communications nets

3AB-2-2.1 Why should simplex be used where possible instead of using a station in repeater operation?
A. Farther distances can be reached
B. To avoid long distance toll charges
C. To avoid tying up the repeater unnecessarily
D. To permit the testing of the effectiveness of your antenna

3AB-2-2.2 When a frequency conflict arises between a simplex operation and a repeater operation, why does good amateur practice call for the simplex operation to move to another frequency?
A. The repeater's output power can be turned up to ruin the front end of the station in simplex operation
B. There are more repeaters than simplex operators
C. Changing the repeater's frequency is not practical
D. Changing a repeater frequency requires the authorization of the Federal Communications Commission

3AB-2-3.1 What is the usual input/output frequency separation for stations in repeater operation in the 2-meter wavelength band?
A. 1 MHz
B. 1.6 MHz
C. 170 Hz
D. 0.6 MHz

3AB-2-3.2 What is the usual input/output frequency separation for stations in repeater operation in the 70-centimeter band?
A. 1.6 MHz
B. 5 MHz
C. 600 kHz
D. 5 kHz

3AB-2-3.3 What is the usual input/output frequency separation for a 6-meter station in repeater operation?
A. 1 MHz
B. 600 kHz
C. 1.6 MHz
D. 20 kHz

3AB-2-3.4 What is the usual input/output frequency separation for a 1.25-meter station in repeater operation?
A. 1000 kHz
B. 600 kHz
C. 1600 kHz
D. 1.6 GHz

3AB-2-4.1 What is a *repeater frequency coordinator?*
A. Someone who coordinates the assembly of a repeater station
B. Someone who provides advice on what kind of system to buy
C. The club's repeater trustee
D. A person or group that recommends frequency pairs for repeater usage

3AB-3.1 Why should local amateur communications be conducted on VHF and UHF frequencies?
A. To minimize interference on HF bands capable of long-distance sky-wave communication
B. Because greater output power is permitted on VHF and UHF
C. Because HF transmissions are not propagated locally
D. Because absorption is greater at VHF and UHF frequencies

3AB-3.2 How can on-the-air transmissions be minimized during a lengthy transmitter testing or loading up procedure?
A. Choose an unoccupied frequency
B. Use a dummy antenna
C. Use a non-resonant antenna
D. Use a resonant antenna that requires no loading up procedure

3AB-3.3 What is the proper Q signal to use to determine whether a frequency is in use before making a transmission?
A. QRV?
B. QRU?
C. QRL?
D. QRZ?

3AB-4.1 What is the proper distress calling procedure when using telephony?
A. Transmit MAYDAY
B. Transmit QRRR
C. Transmit QRZ
D. Transmit SOS

3AB-4.2 What is the proper distress calling procedure when using telegraphy?
A. Transmit MAYDAY
B. Transmit QRRR
C. Transmit QRZ
D. Transmit SOS

3AB-5-1.1 What is one requirement you must meet before you can participate in RACES drills?
A. You must be registered with ARRL
B. You must be registered with a local racing organization
C. You must be registered with the responsible civil defense organization
D. You need not register with anyone to operate RACES

3AB-5-1.2 What is the maximum amount of time allowed per week for RACES drills?
A. Eight hours
B. One hour
C. As many hours as you want
D. Six hours, but not more than one hour per day

8-4-91

3AB-5-2.1 How must you identify messages sent during a RACES drill?
A. As emergency messages
B. As amateur traffic
C. As official government messages
D. As drill or test messages

3AB-6-1.1 What is the term used to describe first-response communications in an emergency situation?
A. Tactical communications
B. Emergency communications
C. Formal message traffic
D. National Traffic System messages

Pg 5

3AB-6-1.2 What is one reason for using tactical call signs such as "command post" or "weather center" during an emergency?
A. They keep the general public informed about what is going on
B. They promote efficiency and coordination in public-service communications activities
C. They are required by the FCC
D. They promote goodwill among amateurs

3AB-6-2.1 What is the term used to describe messages sent into or out of a disaster area that pertain to a person's well being?
A. Emergency traffic
B. Tactical traffic
C. Formal message traffic
D. Health and welfare traffic

Pg 5 Q 6

3AB-6-3.1 Why is it important to provide a means of operating your amateur station separate from the commercial AC power lines?
A. So that you can take your station mobile
B. So that you can provide communications in an emergency
C. So that you can operate field day
D. So that you will comply with Subpart 97.169 of the FCC Rules

3AB-6-3.2 Which type of antenna would be a good choice as part of a portable HF amateur station that could be set up in case of a communications emergency?
A. A three-element quad
B. A three-element Yagi
C. A dipole
D. A parabolic dish

SUBELEMENT 3AC—Radio-Wave Propagation (3 Exam Questions)

3AC-1-1.1 What is the *ionosphere*?
A. That part of the upper atmosphere where enough ions and free electrons exist to affect radio-wave propagation
B. The boundary between two air masses of different temperature and humidity, along which radio waves can travel
C. The ball that goes on the top of a mobile whip antenna
D. That part of the atmosphere where weather takes place

Pg 6

3AC-1-1.2 What is the region of the outer atmosphere that makes long-distance radio communications possible as a result of bending of radio waves?
A. Troposphere
B. Stratosphere
C. Magnetosphere
D. Ionosphere

Pg 6

3AC-1-1.3 What type of solar radiation is most responsible for ionization in the outer atmosphere?
A. Thermal
B. Ionized particle
C. Ultraviolet
D. Microwave

3AC-1-2.1 Which ionospheric layer limits daytime radio communications in the 80-meter wavelength band to short distances?
A. D layer
B. F1 layer
C. E layer
D. F2 layer

Pg 6

3AC-1-2.2 What is the lowest ionospheric layer?
A. The A layer
B. The D layer
C. The E layer
D. The F layer

Pg 6

3AC-1-3.1 What is the lowest region of the ionosphere that is useful for long-distance radio wave propagation?
A. The D layer
B. The E layer
C. The F1 layer
D. The F2 layer

3AC-1-4.1 Which layer of the ionosphere is mainly responsible for long-distance sky-wave radio communications?
A. D layer
B. E layer
C. F1 layer
D. F2 layer

3AC-1-4.2 What are the two distinct sub-layers of the F layer of the ionosphere during the daytime?
A. Troposphere and stratosphere
B. F1 and F2
C. Electrostatic and electromagnetic
D. D and E

3AC-1-4.3 Which two daytime ionospheric layers combine into one layer at night?
A. E and F1
B. D and E
C. F1 and F2
D. E1 and E2

9

8-4-91

3AC-2.1 Which layer of the ionosphere is most responsible for absorption of radio signals during daylight hours?
A. The E layer
B. The F1 layer
C. The F2 layer
D. The D layer

Pg 6

3AC-2.2 When is ionospheric absorption most pronounced?
A. When tropospheric ducting occurs
B. When radio waves enter the D layer at low angles
C. When radio waves travel to the F layer
D. When a temperature inversion occurs

Pg 6

3AC-2.3 During daylight hours, what effect does the D layer of the ionosphere have on 80-meter radio waves?
A. The D layer absorbs the signals
B. The D layer bends the radio waves out into space
C. The D layer refracts the radio waves back to earth
D. The D layer has little or no effect on 80-meter radio wave propagation

3AC-2.4 What causes *ionospheric absorption* of radio waves?
A. A lack of D layer ionization
B. D layer ionization
C. The presence of ionized clouds in the E layer
D. Splitting of the F layer

Pg 6

3AC-3.1 What is usually the condition of the ionosphere just before sunrise?
A. Atmospheric attenuation is at a maximum
B. Ionization is at a maximum
C. The E layer is above the F layer
D. Ionization is at a minimum

Pg 6

3AC-3.2 At what time of day does maximum ionization of the ionosphere occur?
A. Dusk
B. Midnight
C. Midday
D. Dawn

Pg 6

3AC-3.3 Minimum ionization of the ionosphere occurs daily at what time?
A. Shortly before dawn
B. Just after noon
C. Just after dusk
D. Shortly before midnight

Pg 6

3AC-3.4 When is E layer ionization at a maximum?
A. Dawn
B. Midday
C. Dusk
D. Midnight

Pg 6

3AC-4.1 What is the name for the highest radio frequency that will be refracted back to earth?
A. Lowest usable frequency
B. Optimum working frequency
C. Ultra high frequency
D. Critical frequency

3AC-4.2 What causes the *maximum usable frequency* to vary?
A. Variations in the temperature of the air at ionospheric levels
B. Upper-atmospheric wind patterns
C. The amount of ultraviolet and other types of radiation received from the sun
D. Presence of ducting

3AC-4.3 What does the term *maximum usable frequency* refer to?
A. The maximum frequency that allows a radio signal to reach its destination in a single hop
B. The minimum frequency that allows a radio signal to reach its destination in a single hop
C. The maximum frequency that allows a radio signal to be absorbed in the lowest ionospheric layer
D. The minimum frequency that allows a radio signal to be absorbed in the lowest ionospheric layer

Pg 3

3AC-5.1 When two stations are within each other's skip zone on the frequency being used, what mode of propagation would it be desirable to use?
A. Ground wave propagation
B. Sky wave propagation
C. Scatter-mode propagation
D. Ionospheric ducting propagation

3AC-5.2 You are in contact with a distant station and are operating at a frequency close to the maximum usable frequency. If the received signals are weak and somewhat distorted, what type of propagation are you probably experiencing?
A. Tropospheric ducting
B. Line-of-sight propagation
C. Backscatter propagation
D. Waveguide propagation

3AC-6.1 What is the transmission path of a wave that travels directly from the transmitting antenna to the receiving antenna called?
A. Line of sight
B. The sky wave
C. The linear wave
D. The plane wave

HO#1 Pg 5

3AC-6.2 How are VHF signals within the range of the visible horizon propagated?
A. By sky wave
B. By direct wave
C. By plane wave
D. By geometric wave

HO#1 Pg 5

3AC-7.1 Ducting occurs in which region of the atmosphere?
A. F2
B. Ionosphere
C. Troposphere
D. Stratosphere

HO#1 Pg 6

3AC-7.2 What effect does tropospheric bending have on 2-meter radio waves?
A. It increases the distance over which they can be transmitted
B. It decreases the distance over which they can be transmitted
C. It tends to garble 2-meter phone transmissions
D. It reverses the sideband of 2-meter phone transmissions

Pg 6

3AC-7.3 What atmospheric phenomenon causes tropospheric ducting of radio waves?
A. A very low pressure area
B. An aurora to the north
C. Lightning between the transmitting and receiving station
D. A temperature inversion

Pg 6

5