8-4-91

3AC-7.4 Tropospheric ducting occurs as a result of what phenomenon?
A. A temperature inversion
B. Sun spots
C. An aurora to the north
D. Lightning between the transmitting and receiving station

Pg 6

3AC-7.5 What atmospheric phenomenon causes VHF radio waves to be propagated several hundred miles through stable air masses over oceans?
A. Presence of a maritime polar air mass
B. A widespread temperature inversion
C. An overcast of cirriform clouds
D. Atmospheric pressure of roughly 29 inches of mercury or higher

Pg 6

3AC-7.6 In what frequency range does tropospheric ducting occur most often?
A. LF
B. MF
C. HF
D. VHF

Pg 6

SUBELEMENT 3AD—Amateur Radio Practice (4 Exam Questions)

3AD-1-1.1 Where should the green wire in an AC line cord be attached in a power supply?
A. To the fuse
B. To the "hot" side of the power switch
C. To the chassis
D. To the meter

3AD-1-1.2 Where should the black (or red) wire in a three-wire line cord be attached in a power supply?
A. To the filter capacitor
B. To the DC ground
C. To the chassis
D. To the fuse

3AD-1-1.3 Where should the white wire in a three-wire line cord be attached in a power supply?
A. To the side of the transformer's primary winding that has a fuse
B. To the side of the transformer's primary winding without a fuse
C. To the black wire
D. To the rectifier junction

3AD-1-1.4 Why is the retaining screw in one terminal of a light socket made of brass while the other one is silver colored?
A. To prevent galvanic action
B. To indicate correct wiring polarity
C. To better conduct current
D. To reduce skin effect

3AD-1-2.1 How much electrical current flowing through the human body is usually fatal?
A. As little as 100 milliamperes may be fatal
B. Approximately 10 amperes is required to be fatal
C. More than 20 amperes is needed to kill a human being
D. No amount of current will harm you. Voltages of over 2000 volts are always fatal, however

3AD-1-2.2 What is the minimum voltage considered to be dangerous to humans?
A. 30 volts
B. 100 volts
C. 1000 volts
D. 2000 volts

3AD-1-2.3 How much electrical current flowing through the human body is usually painful?
A. As little as 50 milliamperes may be painful
B. Approximately 10 amperes is required to be painful
C. More than 20 amperes is needed to be painful to a human being
D. No amount of current will be painful. Voltages of over 2000 volts are always painful, however

3AD-1-3.1 Where should the main power-line switch for a high voltage power supply be situated?
A. Inside the cabinet, to interrupt power when the cabinet is opened
B. On the rear panel of the high-voltage supply
C. Where it can be seen and reached easily
D. This supply should not be switch-operated

3AD-2-1.1 How is a voltmeter typically connected to a circuit under test?
A. In series with the circuit
B. In parallel with the circuit
C. In quadrature with the circuit
D. In phase with the circuit

Pg 7

8

8-4-91

3AD-2-2.1 How can the range of a voltmeter be extended?
A. By adding resistance in series with the circuit under test
B. By adding resistance in parallel with the circuit under test
C. By adding resistance in series with the meter
D. By adding resistance in parallel with the meter

3AD-3-1.1 How is an ammeter typically connected to a circuit under test?
Pg 7 Q15
A. In series with the circuit
B. In parallel with the circuit
C. In quadrature with the circuit
D. In phase with the circuit

3AD-3-2.1 How can the range of an ammeter be extended?
A. By adding resistance in series with the circuit under test
B. By adding resistance in parallel with the circuit under test
C. By adding resistance in series with the meter
D. By adding resistance in parallel with the meter

3AD-4.1 What is a *multimeter*?
A. An instrument capable of reading SWR and power
B. An instrument capable of reading resistance, capacitance and inductance
C. An instrument capable of reading resistance and reactance
D. An instrument capable of reading voltage, current and resistance

3AD-5-1.1 Where in the antenna transmission line should a peak-reading wattmeter be attached to determine the transmitter output power?
A. At the transmitter output
B. At the antenna feed point
C. One-half wavelength from the antenna feed point
D. One-quarter wavelength from the transmitter output

3AD-5-1.2 For the most accurate readings of transmitter output power, where should the RF wattmeter be inserted?
A. The wattmeter should be inserted and the output measured one-quarter wavelength from the antenna feed point
B. The wattmeter should be inserted and the output measured one-half wavelength from the antenna feed point
C. The wattmeter should be inserted and the output power measured at the transmitter antenna jack
D. The wattmeter should be inserted and the output power measured at the Transmatch output

3AD-5-1.3 At what line impedance are RF wattmeters usually designed to operate?
A. 25 ohms
B. 50 ohms
C. 100 ohms
D. 300 ohms

3AD-5-1.4 What is a *directional wattmeter*?
Pg 7
A. An instrument that measures forward or reflected power
B. An instrument that measures the directional pattern of an antenna
C. An instrument that measures the energy consumed by the transmitter
D. An instrument that measures thermal heating in a load resistor

3AD-5-2.1 If a directional RF wattmeter indicates 90 watts forward power and 10 watts reflected power, what is the actual transmitter output power?
Pg 7 Q13
A. 10 watts
B. 80 watts
C. 90 watts
D. 100 watts

3AD-5-2.2 If a directional RF wattmeter indicates 96 watts forward power and 4 watts reflected power, what is the actual transmitter output power?
Pg 7
A. 80 watts
B. 88 watts
C. 92 watts
D. 100 watts

3AD-6.1 What is a *marker generator*?
A. A high-stability oscillator that generates a series of reference signals at known frequency intervals
B. A low-stability oscillator that "sweeps" through a band of frequencies
C. An oscillator often used in aircraft to determine the craft's location relative to the inner and outer markers at airports
D. A high-stability oscillator whose output frequency and amplitude can be varied over a wide range

3AD-6.2 What type of circuit is used to inject a frequency calibration signal into a communications receiver?
A. A product detector
B. A receiver incremental tuning circuit
C. A balanced modulator
D. A crystal calibrator

3AD-6.3 How is a *marker generator* used?
A. To calibrate the tuning dial on a receiver
B. To calibrate the volume control on a receiver
C. To test the amplitude linearity of an SSB transmitter
D. To test the frequency deviation of an FM transmitter

3AD-7.1 What piece of test equipment produces a stable, low-level signal that can be set to a specific frequency?
A. A wavemeter
B. A reflectometer
C. A signal generator
D. A balanced modulator

3AD-7.2 What is an *RF signal generator* commonly used for?
A. Measuring RF signal amplitude
B. Aligning receiver tuned circuits
C. Adjusting the transmitter impedance-matching network
D. Measuring transmission line impedance

11

8-4-91

3AD-8-1.1 What is a *reflectometer*?
A. An instrument used to measure signals reflected from the ionosphere
B. An instrument used to measure radiation resistance
C. An instrument used to measure transmission-line impedance
D. An instrument used to measure standing wave ratio

3AD-8-1.2 What is the device that can indicate an impedance mismatch in an antenna system?
A. A field-strength meter
B. A set of lecher wires
C. A wavemeter
D. A reflectometer

3AD-8-2.1 For best accuracy when adjusting the impedance match between an antenna and feed line, where should the match-indicating device be inserted?
A. At the antenna feed point
B. At the transmitter
C. At the midpoint of the feed line
D. Anywhere along the feed line

3AD-8-2.2 Where should a reflectometer be inserted into a long antenna transmission line in order to obtain the most valid standing wave ratio indication?
A. At any quarter-wavelength interval along the transmission line
B. At the receiver end
C. At the antenna end
D. At any even half-wavelength interval along the transmission line

3AD-9.1 When adjusting a transmitter filter circuit, what device is connected to the transmitter output?
A. A multimeter
B. A set of Litz wires
C. A receiver
D. A dummy antenna

3AD-9.2 What is a *dummy antenna*?
A. An isotropic radiator
B. A nonradiating load for a transmitter
C. An antenna used as a reference for gain measurements
D. The image of an antenna, located below ground

Pg 1
HO#1
Pg 2

3AD-9.3 Of what materials may a dummy antenna be made?
A. A wire-wound resistor
B. A diode and resistor combination
C. A noninductive resistor
D. A coil and capacitor combination

3AD-9.4 What station accessory is used in place of an antenna during transmitter tests so that no signal is radiated?
A. A Transmatch
B. A dummy antenna
C. A low-pass filter
D. A decoupling resistor

Q14
HO#1
Pg 2
Pg 1

3AD-9.5 What is the purpose of a *dummy load*?
A. To allow off-the-air transmitter testing
B. To reduce output power for QRP operation
C. To give comparative signal reports
D. To allow Transmatch tuning without causing interference

Pg 1
HO#1
Pg 2

3AD-9.6 How many watts should a dummy load for use with a 100-watt single-sideband phone transmitter be able to dissipate?
A. A minimum of 100 watts continuous
B. A minimum of 141 watts continuous
C. A minimum of 175 watts continuous
D. A minimum of 200 watts continuous

3AD-10.1 What is an *S-meter*?
A. A meter used to measure sideband suppression
B. A meter used to measure spurious emissions from a transmitter
C. A meter used to measure relative signal strength in a receiver
D. A meter used to measure solar flux

3AD-10.2 A meter that is used to measure relative signal strength in a receiver is known as what?
A. An S-meter
B. An RST-meter
C. A signal deviation meter
D. An SSB meter

3AD-11-1.1 Large amounts of RF energy may cause damage to body tissue, depending on the wavelength of the signal, the energy density of the RF field, and other factors. How does RF energy effect body tissue?
A. It causes radiation poisoning
B. It heats the tissue
C. It cools the tissue
D. It produces genetic changes in the tissue

Q12
Pg 7

3AD-11-1.2 Which body organ is most susceptible to damage from the heating effects of radio frequency radiation?
A. Eyes
B. Hands
C. Heart
D. Liver

3AD-11-2.1 Scientists have devoted a great deal of effort to determine safe RF exposure limits. What organization has established an RF protection guide?
A. The Institute of Electrical and Electronics Engineers
B. The American Radio Relay League
C. The Environmental Protection Agency
D. The American National Standards Institute

3AD-11-2.2 What is the purpose of the ANSI RF protection guide?
A. It protects you from unscrupulous radio dealers
B. It sets RF exposure limits under certain circumstances
C. It sets transmitter power limits
D. It sets antenna height requirements

3AD-11-2.3 The American National Standards Institute RF protection guide sets RF exposure limits under certain circumstances. In what frequency range is the maximum exposure level the most stringent (lowest)?
A. 3 to 30 MHz
B. 30 to 300 MHz
C. 300 to 3000 MHz
D. Above 1.5 GHz

13

8-4-91

3AD-11-2.4 The American National Standards Institute RF protection guide sets RF exposure limits under certain circumstances. Why is the maximum exposure level the most stringent (lowest) in the ranges between 30 MHz and 300 MHz?
A. There are fewer transmitters operating in this frequency range
B. There are more transmitters operating in this frequency range
C. Most transmissions in this frequency range are for an extended time
D. Human body lengths are close to whole-body resonance in that range

3AD-11-2.5 The American National Standards Institute RF protection guide sets RF exposure limits under certain circumstances. What is the maximum safe power output to the antenna terminal of a hand-held VHF or UHF radio, as set by this RF protection guide?
A. 125 milliwatts
B. 7 watts
C. 10 watts
D. 25 watts

3AD-11-3.1 After you make internal tuning adjustments to your VHF power amplifier, what should you do before you turn the amplifier on?
A. Remove all amplifier shielding to ensure maximum cooling
B. Connect a noise bridge to eliminate any interference
C. Be certain all amplifier shielding is fastened in place
D. Be certain no antenna is attached so that you will not cause any interference

SUBELEMENT 3AE—Electrical Principles (3 Exam Questions)

3AE-1-1.1 What is meant by the term *resistance*?
A. The opposition to the flow of current in an electric circuit containing inductors
B. The opposition to the flow of current in an electric circuit containing capacitance
C. The opposition to the flow of current in an electric circuit containing reactance
D. The opposition to the flow of current in an electric circuit that does not contain reactance

HO2 pg2

3AE-1-2.1 What is an *ohm*?
A. The basic unit of resistance
B. The basic unit of capacitance
C. The basic unit of inductance
D. The basic unit of admittance

HO#2 pg2

3AE-1-2.2 What is the unit measurement of resistance?
A. Volt
B. Ampere
C. Joule
D. Ohm

HO#2 pg2

3AE-1-3.1 Two equal-value resistors are connected in series. How does the total resistance of this combination compare with the value of either resistor by itself?
A. The total resistance is half the value of either resistor
B. The total resistance is twice the value of either resistor
C. The total resistance is the same as the value of either resistor
D. The total resistance is the square of the value of either resistor

HO#2 pg2

3AE-1-3.2 How does the total resistance of a string of series-connected resistors compare to the values of the individual resistors?
A. The total resistance is the square of the sum of all the individual resistor values
B. The total resistance is the square root of the sum of the individual resistor values
C. The total resistance is the sum of the squares of the individual resistor values
D. The total resistance is the sum of all the individual resistance values

HO#2 pg2

3AE-1-4.1 Two equal-value resistors are connected in parallel. How does the total resistance of this combination compare with the value of either resistor by itself?
A. The total resistance is twice the value of either resistor
B. The total resistance is half the value of either resistor
C. The total resistance is the square of the value of either resistor
D. The total resistance is the same as the value of either resistor

HO#2 pg2

3AE-1-4.2 How does the total resistance of a string of parallel-connected resistors compare to the values of the individual resistors?
A. The total resistance is the square of the sum of the resistor values
B. The total resistance is more than the highest-value resistor in the combination
C. The total resistance is less than the smallest-value resistor in the combination
D. The total resistance is the same as the highest-value resistor in the combination

HO#2 pg2

3

8-4-91

3AE-2.1 What is *Ohm's Law*?
A. A mathematical relationship between resistance, voltage and power in a circuit
B. A mathematical relationship between current, resistance and power in a circuit
C. A mathematical relationship between current, voltage and power in a circuit
D. A mathematical relationship between resistance, current and applied voltage in a circuit

3AE-2.2 How is the current in a DC circuit calculated when the voltage and resistance are known?
A. I = E / R
B. P = I × E
C. I = R × E
D. I = E × R

3AE-2.3 What is the input resistance of a load when a 12-volt battery supplies 0.25 amperes to it?
A. 0.02 ohms
B. 3 ohms
C. 48 ohms
D. 480 ohms

3AE-2.4 The product of the current and what force gives the electrical power in a circuit?
A. Magnetomotive force
B. Centripetal force
C. Electrochemical force
D. Electromotive force

3AE-2.5 What is the input resistance of a load when a 12-volt battery supplies 0.15 amperes to it?
A. 8 ohms
B. 80 ohms
C. 100 ohms
D. 800 ohms

3AE-2.6 When 120 volts is measured across a 4700-ohm resistor, approximately how much current is flowing through it?
A. 39 amperes
B. 3.9 amperes
C. 0.26 ampere
D. 0.026 ampere

3AE-2.7 When 120 volts is measured across a 47000-ohm resistor, approximately how much current is flowing through it?
A. 392 A
B. 39.2 A
C. 26 mA
D. 2.6 mA

3AE-2.8 When 12 volts is measured across a 4700-ohm resistor, approximately how much current is flowing through it?
A. 2.6 mA
B. 26 mA
C. 39.2 A
D. 392 A

3AE-2.9 When 12 volts is measured across a 47000-ohm resistor, approximately how much current is flowing through it?
A. 255 μA
B. 255 mA
C. 3917 mA
D. 3917 A

3AE-3-1.1 What is the term used to describe the ability of a component to store energy in a magnetic field?
A. Admittance
B. Capacitance
C. Inductance
D. Resistance

3AE-3-2.1 What is the basic unit of inductance?
A. Coulomb
B. Farad
C. Henry
D. Ohm

3AE-3-2.2 What is a *henry*?
A. The basic unit of admittance
B. The basic unit of capacitance
C. The basic unit of inductance
D. The basic unit of resistance

3AE-3-2.3 What is a *microhenry*?
A. A basic unit of inductance equal to 10^{-12} henrys
B. A basic unit of inductance equal to 10^{-6} henrys
C. A basic unit of inductance equal to 10^{-3} henrys
D. A basic unit of inductance equal to 10^{6} henrys

3AE-3-2.4 What is a *millihenry*?
A. A basic unit of inductance equal to 10^{-12} henrys
B. A basic unit of inductance equal to 10^{-6} henrys
C. A basic unit of inductance equal to 10^{-3} henrys
D. A basic unit of inductance equal to 10^{6} henrys

3AE-3-3.1 Two equal-value inductors are connected in series. How does the total inductance of this combination compare with the value of either inductor by itself?
A. The total inductance is half the value of either inductor
B. The total inductance is twice the value of either inductor
C. The total inductance is equal to the value of either inductor
D. No comparison can be made without knowing the exact inductances

3AE-3-3.2 How does the total inductance of a string of series-connected inductors compare to the values of the individual inductors?
A. The total inductance is equal to the average of all the individual inductances
B. The total inductance is equal to less than the value of the smallest inductance
C. The total inductance is equal to the sum of all the individual inductances
D. No comparison can be made without knowing the exact inductances

3AE-3-4.1 Two equal-value inductors are connected in parallel. How does the total inductance of this combination compare with the value of either inductor by itself?
A. The total inductance is half the value of either inductor
B. The total inductance is twice the value of either inductor
C. The total inductance is equal to the square of either inductance
D. No comparison can be made without knowing the exact inductances

12

8-4-91

3AE-3-4.2 How does the total inductance of a string of parallel-connected inductors compare to the values of the individual inductors?
A. The total inductance is equal to the sum of the inductances in the combination
B. The total inductance is less than the smallest inductance value in the combination
C. The total inductance is equal to the average of the inductances in the combination
D. No comparison can be made without knowing the exact inductances

3AE-4-1.1 What is the term used to describe the ability of a component to store energy in an electric field?
A. Capacitance
B. Inductance
C. Resistance
D. Tolerance

HO#2 P25

3AE-4-2.1 What is the basic unit of capacitance?
A. Farad
B. Ohm
C. Volt
D. Ampere

P28 HO#2 P25

3AE-4-2.2 What is a *microfarad*?
A. A basic unit of capacitance equal to 10^{-12} farads
B. A basic unit of capacitance equal to 10^{-6} farads
C. A basic unit of capacitance equal to 10^{-2} farads
D. A basic unit of capacitance equal to 10^{6} farads

P28

3AE-4-2.3 What is a *picofarad*?
A. A basic unit of capacitance equal to 10^{-12} farads
B. A basic unit of capacitance equal to 10^{-6} farads
C. A basic unit of capacitance equal to 10^{-2} farads
D. A basic unit of capacitance equal to 10^{6} farads

P28

3AE-4-2.4 What is a *farad*?
A. The basic unit of resistance
B. The basic unit of capacitance
C. The basic unit of inductance
D. The basic unit of admittance

P28

3AE-4-3.1 Two equal-value capacitors are connected in series. How does the total capacitance of this combination compare with the value of either capacitor by itself?
A. The total capacitance is twice the value of either capacitor
B. The total capacitance is equal to the value of either capacitor
C. The total capacitance is half the value of either capacitor
D. No comparison can be made without knowing the exact capacitances

HO#2 P25

3AE-4-3.2 How does the total capacitance of a string of series-connected capacitors compare to the values of the individual capacitors?
A. The total capacitance is equal to the sum of the capacitances in the combination
B. The total capacitance is less than the smallest value of capacitance
C. The total capacitance is equal to the average of the capacitances in the combination
D. No comparison can be made without knowing the exact capacitances

HO#2 P25

3AE-4-4.1 Two equal-value capacitors are connected in parallel. How does the total capacitance of this combination compare with the value of either capacitor by itself?
A. The total capacitance is twice the value of either capacitor
B. The total capacitance is half the value of either capacitor
C. The total capacitance is equal to the value of either capacitor
D. No comparison can be made without knowing the exact capacitances

3AE-4-4.2 How does the total capacitance of a string of parallel-connected capacitors compare to the values of the individual capacitors?
A. The total capacitance is equal to the sum of the capacitances in the combination
B. The total capacitance is less than the smallest value of capacitance in the combination
C. The total capacitance is equal to the average of the capacitances in the combination
D. No comparison can be made without knowing the exact capacitances

3

8-4-91

SUBELEMENT 3AF—Circuit Components
(2 Exam Questions)

3AF-1-1.1 What are the four common types of resistor construction?
A. Carbon-film, metal-film, micro-film and wire-film
B. Carbon-composition, carbon-film, metal-film and wire-wound
C. Carbon-composition, carbon-film, electrolytic and metal-film
D. Carbon-film, ferrite, carbon-composition and metal-film

HO not done

3AF-1-2.1 What is the primary function of a resistor?
A. To store an electric charge
B. To store a magnetic field
C. To match a high-impedance source to a low-impedance load
D. To limit the current in an electric circuit

3 #2 Pg HO P7

3AF-1-2.2 What is a *variable resistor*?
A. A resistor that changes value when an AC voltage is applied to it
B. A device that can transform a variable voltage into a constant voltage
C. A resistor with a slide or contact that makes the resistance adjustable
D. A resistor that changes value when it is heated

3AF-1-3.1 What do the first three color bands on a resistor indicate?
A. The value of the resistor in ohms
B. The resistance tolerance in percent
C. The power rating in watts
D. The value of the resistor in henrys

3AF-1-3.2 How can a carbon resistor's electrical tolerance rating be found?
A. By using a wavemeter
B. By using the resistor's color code
C. By using Thevenin's theorem for resistors
D. By using the Baudot code

3AF-1-3.3 What does the fourth color band on a resistor indicate?
A. The value of the resistor in ohms
B. The resistance tolerance in percent
C. The power rating in watts
D. The resistor composition

3AF-1-3.4 When the color bands on a group of resistors indicate that they all have the same resistance, what further information about each resistor is needed in order to select those that have nearly equal value?
A. The working voltage rating of each resistor
B. The composition of each resistor
C. The tolerance of each resistor
D. The current rating of each resistor

3AF-1-4.1 Why do resistors generate heat?
A. They convert electrical energy to heat energy
B. They exhibit reactance
C. Because of skin effect
D. To produce thermionic emission

HO #2 Pg 2

3AF-1-4.2 Why would a large size resistor be substituted for a smaller one of the same resistance?
A. To obtain better response
B. To obtain a higher current gain
C. To increase power dissipation capability
D. To produce a greater parallel impedance

3AF-1-5.1 What is the symbol used to represent a fixed resistor on schematic diagrams?

HO #1 Pg 3

A.
B.
C.
D.

3AF-1-5.2 What is the symbol used to represent a variable resistor on schematic diagrams.

A.
B.
C.
D.

3AF-2-1.1 What is an inductor *core*?
A. The point at which an inductor is tapped to produce resonance
B. A tight coil of wire used in a transformer
C. An insulating material placed between the plates of an inductor
D. The central portion of a coil; may be made from air, iron, brass or other material

3AF-2-1.2 What are the component parts of a coil?
A. The wire in the winding and the core material
B. Two conductive plates and an insulating material
C. Two or more layers of silicon material
D. A donut-shaped iron core and a layer of insulating tape

3AF-2-1.3 Describe an *inductor*.
A. A semiconductor in a conducting shield
B. Two parallel conducting plates
C. A straight wire conductor mounted inside a Faraday shield
D. A coil of conducting wire

3AF-2-1.4 For radio frequency power applications, which type of inductor has the least amount of loss?
A. Magnetic wire
B. Iron core
C. Air core
D. Slug tuned

Pg 8 Q 19

3AF-2-2.1 What is an *inductor*?
A. An electronic component that stores energy in an electric field
B. An electronic component that converts a high voltage to a lower voltage
C. An electronic component that opposes DC while allowing AC to pass
D. An electronic component that stores energy in a magnetic field

Pg 3

11

8-4-91

3AF-2-2.2 What are the electrical properties of an inductor?
A. An inductor stores a charge electrostatically and opposes a change in voltage
B. An inductor stores a charge electrochemically and opposes a change in current
C. An inductor stores a charge electromagnetically and opposes a change in current
D. An inductor stores a charge electromechanically and opposes a change in voltage

3AF-2-3.1 What factors determine the amount of inductance in a *coil*?
A. The type of material used in the core, the diameter of the core and whether the coil is mounted horizontally or vertically
B. The diameter of the core, the number of turns of wire used to wind the coil and the type of metal used in the wire
C. The type of material used in the core, the number of turns used to wind the core and the frequency of the current through the coil
D. The type of material used in the core, the diameter of the core, the length of the coil and the number of turns of wire used to wind the coil

3AF-2-3.2 What can be done to raise the inductance of a 5-microhenry air-core coil to a 5-millihenry coil with the same physical dimensions?
A. The coil can be wound on a non-conducting tube
B. The coil can be wound on an iron core
C. Both ends of the coil can be brought around to form the shape of a donut, or toroid
D. The coil can be made of a heavier-gauge wire

3AF-2-3.3 As an iron core is inserted in a coil, what happens to the inductance?
A. It increases
B. It decreases
C. It stays the same
D. It becomes voltage-dependent

3AF-2-3.4 As a brass core is inserted in a coil, what happens to the inductance?
A. It increases
B. It decreases
C. It stays the same
D. It becomes voltage-dependent

3AF-2-4.1 What is the symbol used to represent an adjustable inductor on schematic diagrams?

A.
B.
C.
D.

3AF-2-4.2 What is the symbol used to represent an iron-core inductor on schematic diagrams?

HO #1 Pg 3 Q18

A. 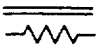
B.
C. 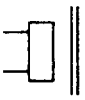
D. 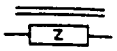

3AF-2-4.3 What is the symbol used to represent an inductor wound over a toroidal core on schematic diagrams?

A. 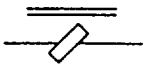
B.
C.
D. 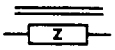

3AF-3-1.1 What is a capacitor *dielectric*?
A. The insulating material used for the plates
B. The conducting material used between the plates
C. The ferrite material that the plates are mounted on
D. The insulating material between the plates

HO not clear

3AF-3-1.2 What are the component parts of a capacitor?
A. Two or more conductive plates with an insulating material between them
B. The wire used in the winding and the core material
C. Two or more layers of silicon material
D. Two insulating plates with a conductive material between them

HO not clear

3AF-3-1.3 What is an *electrolytic capacitor*?
A. A capacitor whose plates are formed on a thin ceramic layer
B. A capacitor whose plates are separated by a thin strip of mica insulation
C. A capacitor whose dielectric is formed on one set of plates through electrochemical action
D. A capacitor whose value varies with applied voltage

3AF-3-1.4 What is a *paper capacitor*?
A. A capacitor whose plates are formed on a thin ceramic layer
B. A capacitor whose plates are separated by a thin strip of mica insulation
C. A capacitor whose plates are separated by a layer of paper
D. A capacitor whose dielectric is formed on one set of plates through electrochemical action

3AF-3-2.1 What is a *capacitor*?

HO #2 Pg 5

A. An electronic component that stores energy in a magnetic field
B. An electronic component that stores energy in an electric field
C. An electronic component that converts a high voltage to a lower voltage
D. An electronic component that converts power into heat

11

8-4-91

3AF-3-2.2 What are the electrical properties of a capacitor?
A. A capacitor stores a charge electrochemically and opposes a change in current
B. A capacitor stores a charge electromagnetically and opposes a change in current
C. A capacitor stores a charge electromechanically and opposes a change in voltage
D. A capacitor stores a charge electrostatically and opposes a change in voltage

3AF-3-2.3 What factors must be considered when selecting a capacitor for a circuit?
A. Type of capacitor, capacitance and voltage rating
B. Type of capacitor, capacitance and the kilowatt-hour rating
C. The amount of capacitance, the temperature coefficient and the KVA rating
D. The type of capacitor, the microscopy coefficient and the temperature coefficient

3AF-3-2.4 How are the characteristics of a capacitor usually *specified?*
A. In volts and amperes
B. In microfarads and volts
C. In ohms and watts
D. In millihenrys and amperes

Pg 8

3AF-3-3.1 What factors determine the amount of capacitance in a *capacitor?*
A. The dielectric constant of the material between the plates, the area of one side of one plate, the separation between the plates and the number of plates
B. The dielectric constant of the material between the plates, the number of plates and the diameter of the leads connected to the plates
C. The number of plates, the spacing between the plates and whether the dielectric material is N type or P type
D. The dielectric constant of the material between the plates, the surface area of one side of one plate, the number of plates and the type of material used for the protective coating

HO not clear

3AF-3-3.2 As the plate area of a capacitor is increased, what happens to its capacitance?
A. Decreases
B. Increases
C. Stays the same
D. Becomes voltage dependent

HO not clear

3AF-3-3.3 As the plate spacing of a capacitor is increased, what happens to its capacitance?
A. Increases
B. Stays the same
C. Becomes voltage dependent
D. Decreases

HO not clear

3AF-3-4.1 What is the symbol used to represent an electrolytic capacitor on schematic diagrams?

A.
B.
C.
D.

3AF-3-4.2 What is the symbol used to represent a variable capacitor on schematic diagrams?

A.
B. 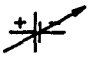
C.
D. 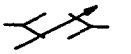

7

8-4-91

SUBELEMENT 3AG—Practical Circuits
(1 Exam Question)

3AG-1-1.1 Which frequencies are attenuated by a low-pass filter?
A. Those above its cut-off frequency
B. Those within its cut-off frequency
C. Those within 50 kHz on either side of its cut-off frequency
D. Those below its cut-off frequency

Pg 1

3AG-1-1.2 What circuit passes electrical energy below a certain frequency and blocks electrical energy above that frequency?
A. A band-pass filter
B. A high-pass filter
C. An input filter
D. A low-pass filter

Pg 1

3AG-1-2.1 Why does virtually every modern transmitter have a built-in low-pass filter connected to its output?
A. To attenuate frequencies below its cutoff point
B. To attenuate low frequency interference to other amateurs
C. To attenuate excess harmonic radiation
D. To attenuate excess fundamental radiation

Pg 1

3AG-1-2.2 You believe that excess harmonic radiation from your transmitter is causing interference to your television receiver. What is one possible solution for this problem?
A. Install a low-pass filter on the television receiver
B. Install a low-pass filter at the transmitter output
C. Install a high-pass filter on the transmitter output
D. Install a band-pass filter on the television receiver

Pg 1

3AG-2-1.1 What circuit passes electrical energy above a certain frequency and attenuates electrical energy below that frequency?
A. A band-pass filter
B. A high-pass filter
C. An input filter
D. A low-pass filter

Pg 1

3AG-2-2.1 Where is the proper place to install a high-pass filter?
A. At the antenna terminals of a television receiver
B. Between a transmitter and a Transmatch
C. Between a Transmatch and the transmission line
D. On a transmitting antenna

Pg 1

3AG-2-2.2 Your Amateur Radio transmissions cause interference to your television receiver even though you have installed a low-pass filter at the transmitter output. What is one possible solution for this problem?
A. Install a high-pass filter at the transmitter terminals
B. Install a high-pass filter at the television antenna terminals
C. Install a low-pass filter at the television antenna terminals also
D. Install a band-pass filter at the television antenna terminals

Pg 1

3AG-3-1.1 What circuit attenuates electrical energy above a certain frequency and below a lower frequency?
A. A band-pass filter
B. A high-pass filter
C. An input filter
D. A low-pass filter

Pg 1

3AG-3-1.2 What general range of RF energy does a band-pass filter reject?
A. All frequencies above a specified frequency
B. All frequencies below a specified frequency
C. All frequencies above the upper limit of the band in question
D. All frequencies above a specified frequency and below a lower specified frequency

3AG-3-2.1 The IF stage of a communications receiver uses a filter with a peak response at the intermediate frequency. What term describes this filter response?
A. A band-pass filter
B. A high-pass filter
C. An input filter
D. A low-pass filter

3AG-4-1.1 What circuit is likely to be found in all types of receivers?
A. An audio filter
B. A beat frequency oscillator
C. A detector
D. An RF amplifier

Pg 8 Q20

3AG-4-1.2 What type of transmitter does this block diagram represent?

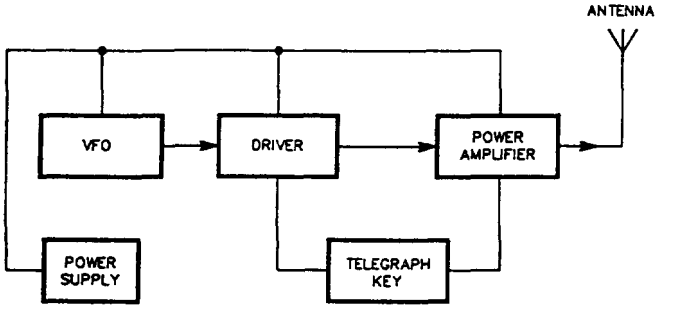

A. A simple packet-radio transmitter
B. A simple crystal-controlled transmitter
C. A single-sideband transmitter
D. A VFO-controlled transmitter

3AG-4-1.3 What type of transmitter does this block diagram represent?

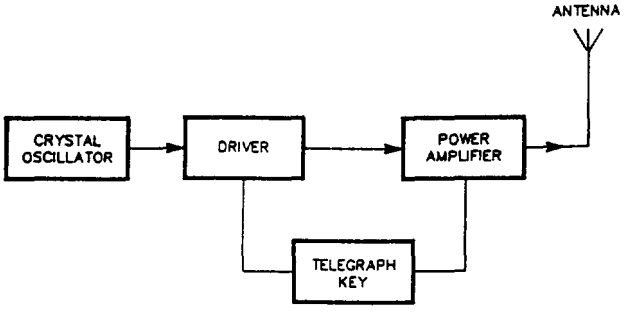

A. A simple packet-radio transmitter
B. A simple crystal-controlled transmitter
C. A single-sideband transmitter
D. A VFO-controlled transmitter

4

8-4-91

3AG-4-1.4 What is the unlabeled block (?) in this diagram?

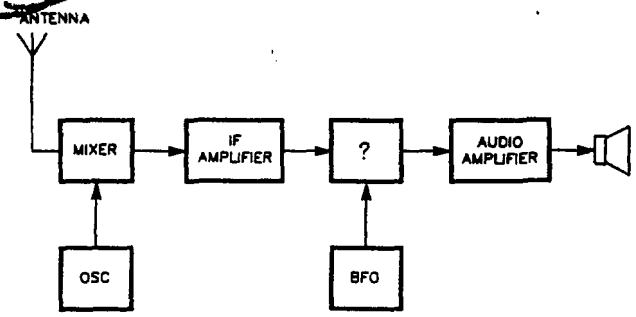

A. An AGC circuit
B. A detector
C. A power supply
D. A VFO circuit

3AG-4-1.5 What type of device does this block diagram represent?

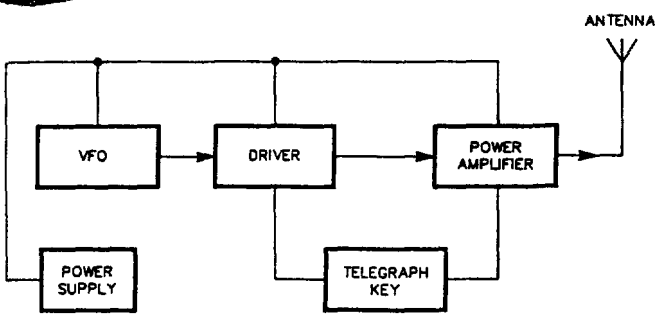

A. A double-conversion receiver
B. A variable-frequency oscillator
C. A simple superheterodyne receiver
D. A simple CW transmitter

3AG-4-2.1 What type of device does this block diagram represent?

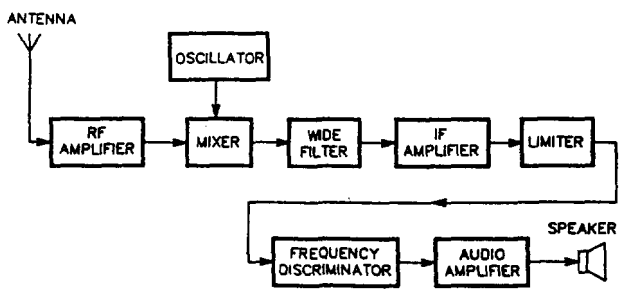

A. A double-conversion receiver
B. A variable-frequency oscillator
C. A simple superheterodyne receiver
D. A simple FM receiver

3AG-4-2.2 What is the unlabeled block (?) in this diagram?

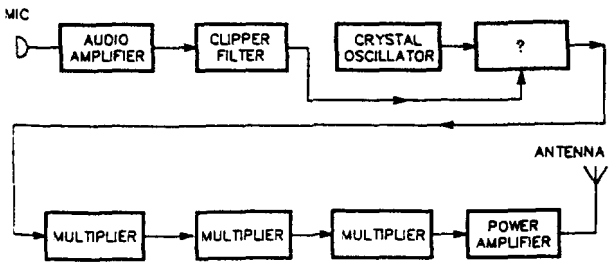

A. A band-pass filter
B. A crystal oscillator
C. A reactance modulator
D. A rectifier modulator

SUBELEMENT 3AH—Signals and Emissions (2 Exam Questions)

3AH-1.1 What is the meaning of the term *modulation*?
A. The process of varying some characteristic of a carrier wave for the purpose of conveying information
B. The process of recovering audio information from a received signal
C. The process of increasing the average power of a single-sideband transmission
D. The process of suppressing the carrier in a single-sideband transmitter

3AH-2-1.1 If the modulator circuit of your FM transmitter fails, what emission type would likely result?
A. An unmodulated carrier wave
B. A phase modulated carrier wave
C. An amplitude modulated carrier wave
D. A frequency modulated carrier wave

3AH-2-1.2 What emission does not have sidebands resulting from modulation?
A. AM phone
B. Test
C. FM phone
D. RTTY

3AH-2-2.1 What is the FCC emission designator for a Morse code telegraphy signal produced by switching the transmitter output on and off?
A. Test
B. AM phone
C. CW
D. RTTY

Q22 pg8

3AH-2-2.2 What is CW?
A. Morse code telegraphy using amplitude modulation
B. Morse code telegraphy using frequency modulation
C. Morse code telegraphy using phase modulation
D. Morse code telegraphy using pulse modulation

pg8

3AH-2-3.1 What is RTTY?
A. Amplitude-keyed telegraphy
B. Frequency-shift-keyed telegraphy
C. Frequency-modulated telephony
D. Phase-modulated telephony

3AH-2-3.2 What is the emission designation for telegraphy by frequency shift keying without the use of a modulating tone?
A. RTTY
B. MCW
C. CW
D. Single-sideband phone

3AH-2-4.1 What emission type results when an on/off keyed audio tone is applied to the microphone input of an FM transmitter?
A. RTTY
B. MCW
C. CW
D. Single-sideband phone

3AH-2-4.2 What is tone-modulated international Morse code telegraphy?
A. Telephony produced by audio fed into an FM transmitter
B. Telegraphy produced by an on/off keyed audio tone fed into a CW transmitter
C. Telegraphy produced by on/off keying of the carrier amplitude
D. Telegraphy produced by an on/off keyed audio tone fed into an FM transmitter

11

8-4-91

3AH-2-5.1 What is the emission designated as "MCW"?
A. Frequency-modulated telegraphy using audio tones
B. Frequency-modulated telephony
C. Frequency-modulated facsimile using audio tones
D. Phase-modulated television

3AH-2-5.2 In an ITU emission designator like A1A, what does the first symbol describe?
A. The nature of the signal modulating the main carrier
B. The type of modulation of the main carrier
C. The speed of a radiotelegraph transmission
D. The type of the information to be transmitted

3AH-2-5.3 What emission type results when an on-off keyed audio oscillator is connected to the microphone jack of an FM phone transmitter?
A. SS
B. RTTY
C. MCW
D. Image

3AH-2-6.1 In an ITU emission designator like F3B, what does the second symbol describe?
A. The nature of the signal modulating the main carrier
B. The type of modulation of the main carrier
C. The type of information to be transmitted
D. The frequency modulation index of a carrier

3AH-2-6.2 How would you transmit packet using an FM 2-meter transceiver?
A. Use your telegraph key to interrupt the carrier wave
B. Modulate your FM transmitter with audio tones from a terminal node controller
C. Use your mike for telephony
D. Use your touch-tone (DTMF) key pad to signal in Morse code.

Q21 not covered

3AH-2-7.1 What type of emission results when speaking into the microphone of a 2-meter FM hand-held transceiver?
A. Amplitude modulated phone
B. Code telegraphy
C. An unmodulated carrier wave
D. Frequency modulated phone

Pg 8

3AH-2-7.2 What emission type do most 2-meter FM transmitters transmit?
A. Interrupted pure carrier wave
B. Frequency modulated phone
C. Single-sideband voice emissions
D. Amplitude modulated carrier waves

Pg 8

*3AH-2-8.1 What is the most important consideration when installing a 10-meter dipole inside an attic?
A. It will exhibit a low angle of radiation
B. The dipole must always be run horizontally polarized
C. It will be covered by an insulation to prevent fire and high enough to prevent being accidentally touched during transmission
D. Dipoles usually don't work in attics

*There is a problem with the answer (C) to question 3AH-2-8.1, as released by the VEC Question Pool Committee. The most important consideration is that an indoor antenna should be treated with respect because of the possibility of adverse biological effects due to near-field radiation. Another point to keep in mind is that insulated wire does *not* reduce or eliminate the risk of RF burns. Finally, a dipole does not pose a fire hazard from RF, whether it uses insulated or uninsulated wire.

3AH-2-8.2 Which type of transmitter will produce a frequency modulated carrier wave?
A. A CW transmitter
B. An amplitude modulated transmitter
C. A single-sideband transmitter
D. A phase modulated transmitter

3AH-3.1 What is the term used to describe a constant-amplitude radio-frequency signal?
A. An RF carrier
B. An AF carrier
C. A sideband carrier
D. A subcarrier

3AH-3.2 What is another name for an unmodulated radio-frequency signal?
A. An AF carrier
B. An RF carrier
C. A sideband carrier
D. A subcarrier

HO not clear

3AH-4.1 What characteristic makes FM telephony especially well-suited for local VHF/UHF radio communications?
A. Good audio fidelity and intelligibility under weak-signal conditions
B. Better rejection of multipath distortion than the AM modes
C. Good audio fidelity and high signal-to-noise ratio above a certain signal amplitude threshold
D. Better carrier frequency stability than the AM modes

3AH-5.1 What emission is produced by a transmitter using a reactance modulator?
A. CW
B. Unmodulated carrier
C. Single-sideband, suppressed-carrier phone
D. Phase modulated phone

3AH-5.2 What other emission does phase modulation most resemble?
A. Amplitude modulation
B. Pulse modulation
C. Frequency modulation
D. Single-sideband modulation

3AH-6.1 Many communications receivers have several IF filters that can be selected by the operator. Why do these filters have different bandwidths?
A. Because some ham bands are wider than others
B. Because different bandwidths help increase the receiver sensitivity
C. Because different bandwidths improve S-meter readings
D. Because some emission types occupy a wider frequency range than others

3AH-6.2 List the following signals in order of increasing bandwidth (narrowest signal first): CW, FM voice, RTTY, SSB voice.
A. RTTY, CW, SSB voice, FM voice
B. CW, FM voice, RTTY, SSB voice
C. CW, RTTY, SSB voice, FM voice
D. CW, SSB voice, RTTY, FM voice

14

8-4-91

3AH-7-1.1 To what is the deviation of an FM transmission proportional?
A. Only the frequency of the audio modulating signal
B. The frequency and the amplitude of the audio modulating signal
C. The duty cycle of the audio modulating signal
D. Only the amplitude of the audio modulating signal

3AH-7-2.1 What is the result of overdeviation in an FM transmitter?
A. Increased transmitter power consumption
B. Out-of-channel emissions (splatter)
C. Increased transmitter range
D. Inadequate carrier suppression

H#2 pg3

3AH-7-2.2 What is *splatter*?
A. Interference to adjacent signals caused by excessive transmitter keying speeds
B. Interference to adjacent signals caused by improper transmitter neutralization
C. Interference to adjacent signals caused by overmodulation of a transmitter
D. Interference to adjacent signals caused by parasitic oscillations at the antenna

H#2 pg3

SUBELEMENT 3AI—Antennas and Feed Lines (3 Exam Questions)

3AI-1-1.1 What antenna type best strengthens signals from a particular direction while attenuating those from other directions?
A. A beam antenna
B. An isotropic antenna
C. A monopole antenna
D. A vertical antenna

Pg 4+8

3AI-1-1.2 What is a *directional antenna*?
A. An antenna whose parasitic elements are all constructed to be directors
B. An antenna that radiates in direct line-of-sight propagation, but not skywave or skip propagation
C. An antenna permanently mounted so as to radiate in only one direction
D. An antenna that radiates more strongly in some directions than others

Pg 4+8

3AI-1-1.3 What is a *Yagi* antenna?
A. Half-wavelength elements stacked vertically and excited in phase
B. Quarter-wavelength elements arranged horizontally and excited out of phase
C. Half-wavelength linear driven element(s) with parasitically excited parallel linear elements
D. Quarter-wavelength, triangular loop elements

3AI-1-1.4 What is the general configuration of the radiating elements of a horizontally polarized Yagi?
A. Two or more straight, parallel elements arranged in the same horizontal plane
B. Vertically stacked square or circular loops arranged in parallel horizontal planes
C. Two or more wire loops arranged in parallel vertical planes
D. A vertical radiator arranged in the center of an effective RF ground plane

3AI-1-1.5 What type of parasitic beam antenna uses two or more straight metal-tubing elements arranged physically parallel to each other?
A. A delta loop antenna
B. A quad antenna
C. A Yagi antenna
D. A Zepp antenna

3AI-1-1.6 How many directly driven elements does a Yagi antenna have?
A. None; they are all parasitic
B. One
C. Two
D. All elements are directly driven

3AI-1-1.7 What is a *parasitic beam antenna*?
A. An antenna where the director and reflector elements receive their RF excitation by induction or radiation from the driven element
B. An antenna where wave traps are used to assure magnetic coupling among the elements
C. An antenna where all elements are driven by direct connection to the feed line
D. An antenna where the driven element receives its RF excitation by induction or radiation from the directors

6

8-4-91

3AI-1-2.1 What is a *cubical quad antenna*?
A. Four parallel metal tubes, each approximately 1/2 electrical wavelength long
B. Two or more parallel four-sided wire loops, each approximately one electrical wavelength long
C. A vertical conductor 1/4 electrical wavelength high, fed at the bottom
D. A center-fed wire 1/2 electrical wavelength long

Q24 HO#2 Pg3

3AI-1-2.2 What kind of antenna array is composed of a square full-wave closed loop driven element with parallel parasitic element(s)?
A. Delta loop
B. Cubical quad
C. Dual rhombic
D. Stacked Yagi

HO#2 Pg3

3AI-1-2.3 Approximately how long is one side of the driven element of a cubical quad antenna?
A. 2 electrical wavelengths
B. 1 electrical wavelength
C. 1/2 electrical wavelength
D. 1/4 electrical wavelength

HO#2 Pg3

3AI-1-2.4 Approximately how long is the wire in the driven element of a cubical quad antenna?
A. 1/4 electrical wavelength
B. 1/2 electrical wavelength
C. 1 electrical wavelength
D. 2 electrical wavelengths

HO#2 Pg3

3AI-1-3.1 What is a *delta loop antenna*?
A. A variation of the cubical quad antenna, with triangular elements
B. A large copper ring, used in direction finding
C. An antenna system composed of three vertical antennas, arranged in a triangular shape
D. An antenna made from several coils of wire on an insulating form

3AI-2-1.1 To what does the term *horizontal* as applied to wave polarization refer?
A. The magnetic lines of force in the radio wave are parallel to the earth's surface
B. The electric lines of force in the radio wave are parallel to the earth's surface
C. The electric lines of force in the radio wave are perpendicular to the earth's surface
D. The radio wave will leave the antenna and radiate horizontally to the destination

3AI-2-1.2 What electromagnetic wave polarization does a cubical quad antenna have when the feed point is in the center of a horizontal side?
A. Circular
B. Helical
C. Horizontal
D. Vertical

HO#2 Pg3

3AI-2-1.3 What electromagnetic wave polarization does a cubical quad antenna have when all sides are at 45 degrees to the earth's surface and the feed point is at the bottom corner?
A. Circular
B. Helical
C. Horizontal
D. Vertical

3AI-2-2.1 What is the polarization of electromagnetic waves radiated from a half-wavelength antenna perpendicular to the earth's surface?
A. Circularly polarized waves
B. Horizontally polarized waves
C. Parabolically polarized waves
D. Vertically polarized waves

3AI-2-2.2 What is the electromagnetic wave polarization of most man-made electrical noise radiation in the HF-VHF spectrum?
A. Horizontal
B. Left-hand circular
C. Right-hand circular
D. Vertical

3AI-2-2.3 To what does the term *vertical* as applied to wave polarization refer?
A. The electric lines of force in the radio wave are parallel to the earth's surface
B. The magnetic lines of force in the radio wave are perpendicular to the earth's surface
C. The electric lines of force in the radio wave are perpendicular to the earth's surface
D. The radio wave will leave the antenna and radiate vertically into the ionosphere

3AI-2-2.4 What electromagnetic wave polarization does a cubical quad antenna have when the feed point is in the center of a vertical side?
A. Circular
B. Helical
C. Horizontal
D. Vertical

HO#2 Pg3

3AI-2-2.5 What electromagnetic wave polarization does a cubical quad antenna have when all sides are at 45 degrees to the earth's surface and the feed point is at a side corner?
A. Circular
B. Helical
C. Horizontal
D. Vertical

3AI-3-1.1 What is meant by the term *standing wave ratio*?
A. The ratio of maximum to minimum inductances on a feed line
B. The ratio of maximum to minimum resistances on a feed line
C. The ratio of maximum to minimum impedances on a feed line
D. The ratio of maximum to minimum voltages on a feed line

HO#2 Pg4

3AI-3-1.2 What is *standing wave ratio* a measure of?
A. The ratio of maximum to minimum voltage on a feed line
B. The ratio of maximum to minimum reactance on a feed line
C. The ratio of maximum to minimum resistance on a feed line
D. The ratio of maximum to minimum sidebands on a feed line

HO#2 Pg4

3AI-3-2.1 What is meant by the term *forward power*?
A. The power traveling from the transmitter to the antenna
B. The power radiated from the front of a directional antenna
C. The power produced during the positive half of the RF cycle
D. The power used to drive a linear amplifier

HO#2 Pg4

7

8-4-91

3AI-3-2.2 What is meant by the term *reflected power*?
A. The power radiated from the back of a directional antenna
B. The power returned to the transmitter from the antenna
C. The power produced during the negative half of the RF cycle
D. Power reflected to the transmitter site by buildings and trees

HO #2 Pg 4

3AI-3-3.1 What happens to the power loss in an unbalanced feed line as the standing wave ratio increases?
A. It is unpredictable
B. It becomes nonexistent
C. It decreases
D. It increases

HO #2 Pg 4

3AI-3-3.2 What type of feed line is best suited to operating at a high standing wave ratio?
A. Coaxial cable
B. Flat ribbon "twin lead"
C. Parallel open-wire line
D. Twisted pair

Q 23 HO #2 Pg 4

3AI-3-3.3 What happens to RF energy not delivered to the antenna by a lossy coaxial cable?
A. It is radiated by the feed line
B. It is returned to the transmitter's chassis ground
C. Some of it is dissipated as heat in the conductors and dielectric
D. It is canceled because of the voltage ratio of forward power to reflected power in the feed line

HO #2 Pg 4

3AI-4-1.1 What is a *balanced line*?
A. Feed line with one conductor connected to ground
B. Feed line with both conductors connected to ground to balance out harmonics
C. Feed line with the outer conductor connected to ground at even intervals
D. Feed line with neither conductor connected to ground

Pg 8

3AI-4-1.2 What is an *unbalanced line*?
A. Feed line with neither conductor connected to ground
B. Feed line with both conductors connected to ground to suppress harmonics
C. Feed line with one conductor connected to ground
D. Feed line with the outer conductor connected to ground at uneven intervals

Q 25 Pg 8

3AI-4-2.1 What is a *balanced antenna*?
A. A symmetrical antenna with one side of the feed point connected to ground
B. An antenna (or a driven element in an array) that is symmetrical about the feed point
C. A symmetrical antenna with both sides of the feed point connected to ground, to balance out harmonics
D. An antenna designed to be mounted in the center

3AI-4-2.2 What is an *unbalanced antenna*?
A. An antenna (or a driven element in an array) that is not symmetrical about the feed point
B. A symmetrical antenna, having neither half connected to ground
C. An antenna (or a driven element in an array) that is symmetrical about the feed point
D. A symmetrical antenna with both halves coupled to ground at uneven intervals

3AI-4-3.1 What device can be installed on a balanced antenna so that it can be fed through a coaxial cable?
A. A balun
B. A loading coil
C. A triaxial transformer
D. A wavetrap

3AI-4-3.2 What is a *balun*?
A. A device that can be used to convert an antenna designed to be fed at the center so that it may be fed at one end
B. A device that may be installed on a balanced antenna so that it may be fed with unbalanced feed line
C. A device that can be installed on an antenna to produce horizontally polarized or vertically polarized waves
D. A device used to allow an antenna to operate on more than one band

3AI-5-1.1 List the following types of feed line in order of increasing attenuation per 100 feet of line (list the line with the lowest attenuation first): RG-8, RG-58, RG-174 and open-wire line.
A. RG-174, RG-58, RG-8, open-wire line
B. RG-8, open-wire line, RG-58, RG-174
C. open-wire line, RG-8, RG-58, RG-174
D. open-wire line, RG-174, RG-58, RG-8

3AI-5-1.2 You have installed a tower 150 feet from your radio shack, and have a 6-meter Yagi antenna on top. Which of the following feed lines should you choose to feed this antenna: RG-8, RG-58, RG-59 or RG-174?
A. RG-8
B. RG-58
C. RG-59
D. RG-174

3AI-5-2.1 You have a 200-foot coil of RG-58 coaxial cable attached to your antenna, but the antenna is only 50 feet from your radio. To minimize feed-line loss, what should you do with the excess cable?
A. Cut off the excess cable to an even number of wavelengths long
B. Cut off the excess cable to an odd number of wavelengths long
C. Cut off the excess cable
D. Roll the excess cable into a coil a tenth of a wavelength in diameter

3AI-5-2.2 How does feed-line length affect signal loss?
A. The length has no effect on signal loss
B. As length increases, signal loss increases
C. As length decreases, signal loss increases
D. The length is inversely proportional to signal loss

HO not due

8

3AI-5-3.1 What is the general relationship between frequencies passing through a feed line and the losses in the feed line?

HO #2 p24

A. Loss is independent of frequency
B. Loss increases with increasing frequency
C. Loss decreases with increasing frequency
D. There is no predictable relationship

3AI-5-3.2 As the operating frequency decreases, what happens to conductor losses in a feed line?

HO not clear

A. The losses decrease
B. The losses increase
C. The losses remain the same
D. The losses become infinite

3AI-5-3.3 As the operating frequency increases, what happens to conductor losses in a feed line?

HO not clear

A. The losses decrease
B. The losses increase
C. The losses remain the same
D. The losses decrease to zero

3AI-6-1.1 You are using open-wire feed line in your amateur station. Why should you ensure that no one can come in contact with the feed line while you are transmitting?

Common sense

A. Because contact with the feed line while transmitting will cause a short circuit, probably damaging your transmitter
B. Because the wire is so small they may break it
C. Because contact with the feed line while transmitting will cause parasitic radiation
D. Because high RF voltages can be present on open-wire feed line

3AI-6-2.1 How can you minimize exposure to radio frequency energy from your transmitting antennas?

A. Use vertical polarization
B. Use horizontal polarization
C. Mount the antennas where no one can come near them
D. Mount the antenna close to the ground

3

ELEMENT 3A ANSWER KEY

SUBELEMENT 3AA

Numbers in this section refer to pages in *Now You're Talking!*

3AA-1.1	A	2-19
3AA-1.2	B	2-19
3AA-2.1		(withdrawn)
3AA-2.2	C	2-20
3AA-2.3	B	2-20
3AA-2.4	A	2-20
3AA-2.5	B	2-20
3AA-3.1	A	2-20
3AA-3.2	A	2-20
3AA-3.3	A	2-20
3AA-4.1	B	2-19
3AA-4.2	A	2-20
3AA-4.3	A	2-25
3AA-5.1	D	2-21
3AA-5.2	C	2-21
3AA-6-1.1	C	2-20
3AA-6-1.2	D	2-20
3AA-6-2.1	C	2-20
3AA-6-3.1	D	2-20
3AA-6-4.1	B	2-20
3AA-7-1.1	C	2-20
3AA-7-1.2	B	2-20
3AA-7-1.3	D	2-20
3AA-7-2.1	C	2-20
3AA-7-2.2	C	2-20
3AA-7-3.1	A	2-20
3AA-7-3.2	D	2-20
3AA-7-3.3	D	2-20
3AA-8-1.1	B	2-24
3AA-8-2.1	B	2-24
3AA-8-3.1	C	2-24
3AA-9-1.1	A	2-22
3AA-9-2.1	A	2-22
3AA-10.1	A	2-22
3AA-10.2	C	2-22
3AA-10.3	D	2-22
3AA-10.4	B	2-22
3AA-11-1.1	A	2-21
3AA-11-1.2	B	2-21
3AA-11-1.3	A	2-21
3AA-11-2.1	D	2-21
3AA-11-2.2	A	2-21
3AA-11-2.3	C	2-21
3AA-11-2.4	A	2-21
3AA-12.1	A	2-23
3AA-12.2	C	2-24
3AA-12.3	B	2-24
3AA-12.4	D	2-24
3AA-12.5	C	2-24
3AA-13.1	B	2-22
3AA-13.2	D	2-22
3AA-13.3	D	2-22
3AA-13.4	C	2-22
3AA-14.1	D	2-23
3AA-14.2	C	2-23
3AA-14.3	D	2-24
3AA-15.1	A	2-24
3AA-15.2	C	2-24
3AA-15.3	D	2-24
3AA-15.4	B	2-24
3AA-16.1	B	2-24
3AA-16.2	D	2-24
3AA-16.3	C	2-24
3AA-17.1	A	2-21

SUBELEMENT 3AB

3AB-1.1	A	9-14
3AB-1.2	C	9-14
3AB-1.3	D	9-14
3AB-2-1.1	B	9-19
3AB-2-1.2	C	9-19
3AB-2-1.3	A	9-19
3AB-2-1.4	D	9-19
3AB-2-1.5	B	9-18
3AB-2-1.6	B	9-19
3AB-2-1.7	D	9-19
3AB-2-2.1	C	9-19
3AB-2-2.2	C	2-24
3AB-2-3.1	D	9-18
3AB-2-3.2	B	9-18
3AB-2-3.3	A	9-18
3AB-2-3.4	C	9-18
3AB-2-4.1	D	2-21
3AB-3.1	A	2-24
3AB-3.2	B	9-12
3AB-3.3	C	9-9
3AB-4.1	A	2-21
3AB-4.2	D	2-21
3AB-5-1.1	C	2-22
3AB-5-1.2	B	2-22
3AB-5-2.1	D	2-22
3AB-6-1.1	A	2-22
3AB-6-1.2	B	2-22
3AB-6-2.1	D	2-22
3AB-6-3.1	B	2-22
3AB-6-3.2	C	2-22

SUBELEMENT 3AC

3AC-1-1.1	A	9-3
3AC-1-1.2	D	9-3
3AC-1-1.3	C	9-41
3AC-1-2.1	A	9-41
3AC-1-2.2	B	9-41
3AC-1-3.1	B	9-41
3AC-1-4.1	D	9-42
3AC-1-4.2	B	9-42
3AC-1-4.3	C	9-42
3AC-2.1	D	9-41
3AC-2.2	B	9-41
3AC-2.3	A	9-41
3AC-2.4	B	9-41
3AC-3.1	D	9-42
3AC-3.2	C	9-42
3AC-3.3	A	9-42
3AC-3.4	B	9-42
3AC-4.1	D	9-44
3AC-4.2	C	9-44
3AC-4.3	A	9-44
3AC-5.1	C	9-45
3AC-5.2	C	9-45
3AC-6.1	A	9-46
3AC-6.2	B	9-46
3AC-7.1	C	9-46
3AC-7.2	A	9-46
3AC-7.3	D	9-46
3AC-7.4	A	9-46
3AC-7.5	B	9-46
3AC-7.6	D	9-46

SUBELEMENT 3AD

3AD-1-1.1	C	8-13
3AD-1-1.2	D	8-13
3AD-1-1.3	B	8-13
3AD-1-1.4	B	8-13
3AD-1-2.1	A	8-14
3AD-1-2.2	A	8-14
3AD-1-2.3	A	8-14
3AD-1-3.1	C	8-14
3AD-2-1.1	B	8-15
3AD-2-2.1	C	8-15
3AD-3-1.1	A	8-15
3AD-3-2.1	D	8-15
3AD-4.1	D	8-16
3AD-5-1.1	A	8-16
3AD-5-1.2	C	8-16
3AD-5-1.3	B	8-16
3AD-5-1.4	A	8-16
3AD-5-2.1	B	8-16
3AD-5-2.2	C	8-16
3AD-6.1	A	8-17
3AD-6.2	D	8-17
3AD-6.3	A	8-17
3AD-7.1	C	8-17
3AD-7.2	B	8-17
3AD-8-1.1	D	8-17
3AD-8-1.2	D	8-17
3AD-8-2.1	A	8-17
3AD-8-2.2	C	8-17
3AD-9.1	D	8-18

3AD-9.2	B	8-18
3AD-9-3	C	8-18
3AD-9.4	B	8-18
3AD-9.5	A	8-18
3AD-9.6	A	8-18
3AD-10.1	C	8-18
3AD-10.2	A	8-18
3AD-11-1.1	B	8-18
3AD-11-1.2	A	8-18
3AD-11-2.1	D	8-19
3AD-11-2.2	B	8-19
3AD-11-2.3	B	8-19
3AD-11-2.4	D	8-19
3AD-11-2.5	B	8-19
3AD-11-3.1	C	8-19

SUBELEMENT 3AE

3AE-1-1.1	D	3-6
3AE-1-2.1	A	3-6
3AE-1-2.2	D	3-6
3AE-1-3.1	B	3-9
3AE-1-3.2	D	3-9
3AE-1-4.1	B	3-9
3AE-1-4.2	C	3-9
3AE-2.1	D	3-8
3AE-2.2	A	3-8
3AE-2.3	C	3-8
3AE-2.4	D	3-10
3AE-2.5	B	3-8
3AE-2.6	D	3-8
3AE-2.7	D	3-8
3AE-2.8	A	3-8
3AE-2.9	A	3-8
3AE-3-1.1	C	3-15
3AE-3-2.1	C	3-16
3AE-3-2.2	C	3-16
3AE-3-2.3	B	3-16
3AE-3-2.4	C	3-16
3AE-3-3.1	B	3-16
3AE-3-3.2	C	3-16
3AE-3-4.1	A	3-16
3AE-3-4.2	B	3-16
3AE-4-1.1	A	3-16
3AE-4-2.1	A	3-16
3AE-4-2.2	B	3-16
3AE-4-2.3	A	3-16
3AE-4-2.4	B	3-16
3AE-4-3.1	C	3-17
3AE-4-3.2	B	3-17
3AE-4-4.1	A	3-17
3AE-4-4.2	A	3-17

SUBELEMENT 3AF

3AF-1-1.1	B	4-7
3AF-1-2.1	D	4-7
3AF-1-2.2	C	4-9
3AF-1-3.1	A	4-9
3AF-1-3.2	B	4-9
3AF-1-3.3	B	4-10
3AF-1-3.4	C	4-9
3AF-1-4.1	A	4-10
3AF-1-4.2	C	4-10
3AF-1-5.1	B	4-2
3AF-1-5.2	C	4-2
3AF-2-1.1	D	4-10
3AF-2-1.2	A	4-10
3AF-2-1.3	D	4-10
3AF-2-1.4	C	4-11
3AF-2-2.1	D	4-10
3AF-2-2.2	C	4-10
3AF-2-3.1	D	4-10
3AF-2-3.2	B	4-10
3AF-2-3.3	A	4-10
3AF-2-3.4	B	4-10
3AF-2-4.1	A	4-11
3AF-2-4.2	B	4-11
3AF-2-4.3	C	4-11
3AF-3-1.1	D	4-12
3AF-3-1.2	A	4-12
3AF-3-1.3	C	4-14
3AF-3-1.4	C	4-13
3AF-3-2.1	B	4-12
3AF-3-2.2	D	4-11
3AF-3-2.3	A	4-12
3AF-3-2.4	B	4-12
3AF-3-3.1	A	4-12
3AF-3-3.2	B	4-12
3AF-3-3.3	D	4-12
3AF-3-4.1	D	4-13
3AF-3-4.2	A	4-14

SUBELEMENT 3AG

3AG-1-1.1	A	5-7
3AG-1-1.2	D	5-7
3AG-1-2.1	C	5-8
3AG-1-2.2	B	5-7
3AG-2-1.1	B	5-8
3AG-2-2.1	A	5-8
3AG-2-2.2	B	5-8
3AG-3-1.1	A	5-8
3AG-3-1.2	D	5-8
3AG-3-2.1	A	5-8
3AG-4-1.1	C	5-11
3AG-4-1.2	D	5-9
3AG-4-1.3	B	5-9
3AG-4-1.4	B	5-12
3AG-4-1.5	D	5-9
3AG-4-2.1	D	5-12
3AG-4-2.2	C	5-10

SUBELEMENT 3AH

3AH-1.1	A	5-9
3AH-2-1.1	A	5-9
3AH-2-1.2	B	9-46
3AH-2-2.1	C	5-9
3AH-2-2.2	A	5-9
3AH-2-3.1	B	9-21
3AH-2-3.2	A	9-21
3AH-2-4.1	B	9-41
3AH-2-4.2	D	9-41
3AH-2-5.1	A	9-41
3AH-2-5.2	B	9-41
3AH-2-5.3	C	9-41
3AH-2-6.1	A	9-41
3AH-2-6.2	B	9-41
3AH-2-7.1	D	9-41
3AH-2-7.2	B	9-41
3AH-2-8.1	C	8-18
3AH-2-8.2	D	9-41
3AH-3.1	A	9-41
3AH-3.2	B	9-41
3AH-4.1	C	9-41
3AH-5.1	D	5-10
3AH-5.2	C	5-9
3AH-6.1	D	9-47
3AH-6.2	C	9-47
3AH-7-1.1	D	9-47
3AH-7-2.1	B	9-47
3AH-7-2.2	C	9-47

SUBELEMENT 3AI

3AI-1-1.1	A	7-19
3AI-1-1.2	D	7-19
3AI-1-1.3	C	7-19
3AI-1-1.4	A	7-24
3AI-1-1.5	C	7-19
3AI-1-1.6	B	7-19
3AI-1-1.7	A	7-25
3AI-1-2.1	B	7-27
3AI-1-2.2	B	7-27
3AI-1-2.3	D	7-27
3AI-1-2.4	C	7-27
3AI-1-3.1	A	7-28
3AI-2-1.1	B	7-24
3AI-2-1.2	C	7-27
3AI-2-1.3	C	7-27
3AI-2-2.1	D	7-25
3AI-2-2.2	D	7-25
3AI-2-2.3	C	7-24
3AI-2-2.4	D	7-27
3AI-2-2.5	D	7-27
3AI-3-1.1	D	7-5
3AI-3-1.2	A	7-5
3AI-3-2.1	A	7-6
3AI-3-2.2	B	7-6
3AI-3-3.1	D	7-23
3AI-3-3.2	C	7-23
3AI-3-3.3	C	7-23
3AI-4-1.1	D	7-5
3AI-4-1.2	C	7-5
3AI-4-2.1	B	7-5
3AI-4-2.2	A	7-5
3AI-4-3.1	A	7-5

3AI-4-3.2	B	7-5
3AI-5-1.1	C	7-24
3AI-5-1.2	A	7-24
3AI-5-2.1	C	7-24
3AI-5-2.2	B	7-24
3AI-5-3.1	B	7-24
3AI-5-3.2	A	7-24
3AI-5-3.3	B	7-24
3AI-6-1.1	D	7-10
3AI-6-2.1	C	7-21

Attachment 5

REPORT OF INVESTIGATION
BY CHRIS McELWAIN

1. On Saturday 7/27/91 at 1P.M., I told Leo Fahmie, KJ6HI, an employee of Henry Radio, West Los Angeles, that I was interested in obtaining a ham license. He handed me a flyer (exb.A) , with addition in pen of Charlie Pascal and His new phone number. Leo said to make sure to mention his name to Charlie because it may help me get a spot in the class.

2. On Sunday 7/28/91 at 5:13 P.M. I called 213-313-3863 and made contact with Mr. Pascal. I told him that I was interested in getting my ham radio license with code. He told me there was a class on August 4th, and if I had any knowledge of code he could pass me. I told him "I pretty much know the letters, but can't copy 5 wpm." Charlie said that "I can take you all the way to General, Advanced, and Amateur Extra, whatever you'd like." Next He gave me the address which was 4754 La Villa Marina, unit J, Marina Del Rey, California. He gave me the phone number of Sandy, 213-305-1714. He told me to call her and let her know about registering and tell her I had already talked to Charlie. He told me the class would cost $150.00. He said to try to get into the class on the 4th, he said it work better for me, especially with the code. I told him that I have no one to practice the code with, he told me "I will get someone for you to practice with, we will fix you up, get in to the class on the 4th".

3. I called Sandy 7/29/91 7:25 P.M., in which I reached her answering machine. I left a message, that I was interested in the class on Sunday. I left my name, address and phone number.

4. On 7/30/91 I received a message from Mr. Pascal at 10:28A.M. He Said "If you're still interested call 213-305-1714". He left the time, date and address of the class.

5. On 7/31/91 I called Sandy and reached her. She said that "I have you as a possibility for the class and would be happy to have you in the class".

6. OOC, Dave Morse came to my house to brief me. At that time Dave and another Advanced class Amateur administered a quick 5 W.P.M. Code test. Both had determined there was no way I could pass the test at this time.

7. I called Sandy with Dave on the other extension. I left a message to let her know that I will come to the class. I told her that although I know some Morse Code I cannot copy 5 WPM.

8. I arrived at the class on Sunday 8/4/91. I ran into a friend Leslie Haliburton from the S.F.V. Amateur Radio Club, and intercepted her outside. I told her that I was Investigating the class and that no one was to know that I was a Licensed Amateur.

9. I immediately went to the phone and called Dave Morse to inform him that Leslie was in the class. About 9:30 Charlie started teaching the theory portion of the exam. At 12:05 we broke for a 1 hour lunch, for those who wanted to do code practice, it was done during lunch.

10. Charlie showed us the difference between a dit and dah. In practice Charlie only covered eleven letters, all 10 numbers and the period. THe letters consisted of (EISHTMONADU). Charlie said that" you know 11 letters the number and the period, you know enough for the code test". Then he sent the sentence (THE TRAIN IS NOT AT THE STATION.). Then he sent the next sentence (THE NAME IS TOM AND I AM IN TENNESSEE.). Then Charlie said that " the test will be one of the two sentences, I would violate the integrity of the test by telling which sentence". I asked who would give the test and he said," I will". About 45 minutes were spent in code preparation. The remainder of the afternoon, 1:10P.M. to 2:30, was spent on the theory preparation.

11. The 1st two VE's to arrive were Terence Pierce, KI6TY VE#9205, Lance B. Ferrenti, AB6DB VE#9804. They administered the Novice written exam. The two VE's graded the written exam for novice and everyone passed. They announced out loud how many people got 100.

12. As the 1st 2 VE's were finishing the grading the third VE, J.J. Quinn, KJ6HW VE#593, arrived. The 3 VE's Administered the Technician theory test. Some test scores were given out.

13. Charlie came into the room and announced that he would give the code test. He said, "1st I,ll send you the sentence, then random letters and the numbers". The test consisted of one sentence which was (THE NAME IS TOM AND I AM IN TENNESSEE.) "OK here comes the random letters" (approx. 11 letters that were learned), then Charlie said "here are the numbers". The speed seemed slow and when I asked about it Charlie explained that other people use the Farnsworth method. It is my opinion that the code speed was much less than 5 W.P.M. The code test was sent by Charlie on an MFJ keyboard, not via code tape. All papers were collected. One classmate said he couldn't copy the code, and a couple of people didn't take the code exam. All 3 VE's graded the papers.

14. Approx. 13 people participated in the class and one person came in to take the code test only. I was never given the cost of the exam, but was told that if I wanted to come back and take another code exam it would cost $5.25. No one was asked for any form of ID.

W5YI-VEC

National Volunteer Examiner Coordinator

This certifies that: CHRIS McELWAIN

NAME — STATION CALL SIGN

DATE OF ISSUE: 09/04/91

CITY/STATE (Session Site): VENICE, CA

10331 LINDLEY # 141

NUMBER AND STREET

NORTHRIDGE — CA — 91326

CITY — STATE — ZIP

has SUCCESSFULLY PASSED the following elements:

☒ 1(A) 5 wpm ~~☐ 1(B) 13 wpm~~ ~~☐ 1(C) 20 wpm~~ ☒ 2 ☒ 3(A) ~~☐ 3(B)~~ ~~☐ 4(A)~~ ~~☐ 4(B)~~

and will be given credit for this examination element when the appropriate additional examination element is (re)taken at a subsequent examination session within one year of the date of issue of this certificate.

has SUCCESSFULLY PASSED all elements for the following operator license class:

~~☐ Novice,~~ ☒ Technician, Plus ~~☐ General,~~ ~~☐ Advanced,~~ ~~☐ Amateur Extra.~~

If you already have an FCC-issued amateur radio license, this certificate validates temporary (interim) operation with the rights and privileges of your new operator class (see Section 97.35 of the Commission's Rules) until you receive the license for your new operator class, or for a period of one year of the date of issue of this certificate, whichever comes first.

When operating on an interim basis in the telegraphy mode, you must append your call sign with /KT (Technician), /AG (General), /AA (Advanced) or /AE (Extra Class.) Use the word "Temporary" before the identifier (KT, AG, AA or AE) when operating in the voice mode.

THIS CERTIFICATE IS NOT A LICENSE PERMIT OR ANY OTHER KIND OF OPERATING AUTHORITY

W5YI · VEC — HAM IT UP! — VOLUNTEER EXAMINING

Christopher J McElwain

SIGNATURE OF APPLICANT

VOLUNTEER EXAMINERS

	SIGNATURE	VE-#	STATION CALL SIGN
(1.)	[illegible]	9205	KI6TY
(2.)	James B. Ferrati	9804	AB6DB
(3.)	[illegible]	6593	KJ6HW

W5YI-VEC; NATIONAL VOLUNTEER EXAMINER COORDINATOR

FREDERICK O. MAIA, W5YI

P.O. Box 565101; Dallas, Texas; 75356 - Tel: (817) 461-6443

12:30 PM - Some of class already here f. review

Attachment (1)

Bending of signals like on 2 meters = tropo (for troposphere duct)
travel over 500 mile
Bending of waves - caused by increases distance - they would on that (Sand)

? equipment
? watt meter or SWR meter for most accurate
transmittal antenna term or transmitter antenna pack
best or most!
2 of these are on test

multimeter - volts, current & resistance
? What is a multimeter

& SWR meter same as
? is what does a directional watt meter
reads forward and reflected power

100 W forward + 10 back = 90
96 w f 4 watts reflect = 92

What is minimum voltage lethal to human?
30 ~~W~~ - (they actually use word dangerous ~~in test~~ " Sand)

Who sets standards - ANSI
("Amer Natl Stds ~~Inst~~ Sand) - ~~they do~~

? What does ANSI set
Sets RF exp limits

? In wiring up power supply where does
black & red wire go - fuse

In tuning or adjusting transmittal filter (2)
device — Dummy load

Electrical components

(1) capacitor - stores energy
rated in farads - stored in farads
capacitor has 2 plates

? What is material between 2 plates that (3) (4) (5)
~~allows capacitor to store energy~~ (7)
(6) ~~the electric material ferrite~~
Answer (2) (10)

? How is capacitor usually rated -
microfarads & volts

Sandy looking at all three tests - wanted
Charlie to clarify (she said this & had
tests in front of her)

? what is micro farad 10^{-6}

What is the law - Ohms (missed part of what he said)

Sandy - Under that question need to
understand it is understand 10^{-6} that
is kg (minus is key in test?)

? what does inductor do
Coils - stores and opposes current changes

? what does resistor do?
Resists

? What is 4th band on a resistor
tolerance

Sandy - "Ohm is basic unit of resistance & the 4th band indicates tolerance in %"

(3)

Modes of communication
(new student arrived - took quick break here)
Will be doing a new handout. Will try to get it to each of us in a week
Modes of com
CW - morse code = A1A
Telegraphy - Amplitude
CW = switch " carrier off + on
Sandy - "Amplitude modulation is used"
switches strength off + on

morse code designated by ITU
? In ITU, what does the first letter designation mean - A = type of emission used
International Telecomm. Union - not needed for test

FM Modulation - similar to PM Modulation (frequency, phase)

J3E = single sideband

Charlie thinks this is all we need to know

Antennas -
vertical - they are electric lines of force
there is something on two word test that says magnetic - wrong - play word
transmits electric lines of force perpendicular
(hint words - Sandy)