Before the
FEDERAL COMMUNICATIONS COMMISSION
Washington, D.C. 20554

In the Matter of Revision of Part 15 of the Commission's Rules to Permit Unlicensed National Information Infrastructure (U-NII) Devices in the 5 GHz Band	ET Docket No. 13-49

COMMENTS OF QUALCOMM INCORPORATED ON PUBLIC NOTICE SEEKING TO REFRESH THE RECORD

Dean R. Brenner
Senior Vice President, Government Affairs

John W. Kuzin
Vice President & Regulatory Counsel

1730 Pennsylvania Avenue, NW
Suite 850
Washington, DC 20006
202-263-0020

Dated: July 7, 2016

SUMMARY

Qualcomm applauds the FCC for issuing the *Public Notice* to refresh the record on sharing the 5.9 GHz Dedicated Short Range Communications ("DSRC") band with unlicensed U-NII-4 Wi-Fi operations. We are eager for the Commission to provide clarity on spectrum sharing in this band, so Qualcomm and other DSRC technology providers can ensure the rapid, broad, and successful deployment of DSRC services that improve road safety by supporting low-latency communications among vehicles, pedestrians, and roadway infrastructure. At the same time, Qualcomm supports increasing the available 5 GHz unlicensed spectrum by opening the lower portion of the DSRC band for sharing with Wi-Fi operations on a secondary basis. As detailed herein, Qualcomm's rechannelization proposal provides the best solution for achieving both of these important goals. Rechannelization best ensures the protection of DSRC safety-of-life services while providing additional 40-MHz, 80-MHz and 160-MHz-wide Wi-Fi channels.

Rechannelization will most reliably protect DSRC safety-of-life communications because it places these important messages in spectrum that remains exclusively allocated to DSRC and is as far away as possible from unlicensed operations in the current U-NII-3 band and the new U-NII-4 band. Out-of-band emissions ("OOBE") interference into DSRC Channel 172 at the lower end of the band from U-NII-3 operations was present under the prior U-NII-3 OOBE limits, and the FCC's recent relaxation of these OOBE limits increases the potential for interference from U-NII-3 into DSRC. Rechannelization allows the FCC to limit OOBE levels from U-NII-3 operations and the new U-NII-4 operations in the lower portion of the DSRC band to fully protect DSRC safety-of-life messages in the upper 30 MHz portion of the DSRC band.

In contrast to the rechannelization proposal, the detect-and-avoid proposal purports to open the entire 75 MHz-wide DSRC band for unlicensed use (even though Wi-Fi does not need to use the upper 30 MHz) and does not offer DSRC safety-of-life messages protection in

spectrum that remains exclusively allocated to DSRC. Instead, the detect-and-avoid proposal leaves DSRC safety-of-life channel 172 in place where it is subject to increasing levels of interference from growing U-NII-3 unlicensed operations that will be in heavy use inside of vehicles, homes, and businesses across America. And, as noted above, under the detect-and-avoid proposal, DSRC will suffer interference from in-band U-NII-4 Wi-Fi operations if DSRC signals are not properly detected. The detect-and-avoid proposal also would require the design and implementation of additional Wi-Fi device hardware, possible standards development work, and extensive verification testing for the simultaneous sensing of multiple 10 MHz channels.

In contrast to the detect-and-avoid proposal, rechannelization would have DSRC use 20 MHz channelization in the shared 5.850-5.895 GHz portion of the band because doing so will improve sharing by increasing the probability that unlicensed Wi-Fi equipment, which also uses 20 MHz channels, senses DSRC operations. Commercial Wi-Fi systems have successfully implemented 20 MHz channel sensing for over 15 years, and their performance is proven. Channel sensing in multiple 10 MHz channels simultaneously, which the detect-and-avoid proposal requires across the band, is not even defined in 802.11n, ac, or ax, so U-NII-4 operations under this proposal likely would require new hardware and extensive verification testing. Rechannelization would use 10 MHz channelization in the upper 30 MHz portion of the band that is exclusively reserved for DSRC safety-of-life operations, such as vehicle-to-vehicle ("V2V") collision avoidance communications, so DSRC safety-of-life systems testing that has occurred to date would still be valid.

Moreover, because it would require Wi-Fi operations to avoid the entire band when DSRC packets are detected, the detect-and-avoid proposal greatly restricts the band's availability for Wi-Fi. Widely-deployed DSRC roadway infrastructure and DSRC-equipped vehicles thus

will prevent Wi-Fi from accessing the entire U-NII-4 band within vehicles and in and around homes and businesses up to several hundred meters away or greater from DSRC communications. Under the detect-and-avoid proposal, as presented last year, if DSRC signals are detected anywhere within the 5.850-5.925 GHz band, Wi-Fi operations must exit the entire band — even if DSRC is not using any of the lower 45 MHz, which is the only part of the band that Wi-Fi needs to support an additional 80 MHz and an additional 160 MHz channel.

In addition, rechannelization need not delay the deployment of DSRC. As a leading developer of DSRC chipsets and Wi-Fi chipsets, Qualcomm has explained that it can rapidly integrate the rechannelization proposal into DSRC and Wi-Fi products. Claims that rechannelization will require more extensive testing than the detect-and-avoid proposal are completely false. Placing safety-of-life communications in a part of the DSRC band that is off limits to Wi-Fi will better protect those communications and eliminate any chance that unlicensed systems do not detect DSRC safety messages and begin transmissions that interfere with these life-critical communications. On the other hand, with energy sensing in the detect-and-avoid proposal, there is always the possibility of a missed detection.

To be clear, the detect-and-avoid proposal will require extensive testing to ensure that U-NII-4 devices detect and avoid DSRC communications all the time, which has considerable tradeoffs because maximizing the probability of detection increases the probability of false detections which makes the band much less usable for Wi-Fi. And, as explained above, leaving the safety-of-life communications in DSRC Channel 172 will subject them to OOBE interference from U-NII-3 operations that will be omnipresent in moving vehicles and in parks, libraries, homes and businesses. No amount of testing will eliminate the risk of interference from adjacent channel U-NII-3 operations to safety-of-life operations that remain in the lower part of the band.

In contrast, rechannelization can be implemented relatively quickly because it does not require hardware changes or significant changes to the DSRC standard, and it would require substantially less verification testing than the detect-and-avoid proposal. Accordingly, Qualcomm strongly believes that rechannelization provides the best long-term solution to ensure the success of DSRC.

In sum, Qualcomm is strongly committed to providing wireless technology and chipsets to enable the speedy deployment of DSRC services that improve vehicular safety. We have long been a developer and proponent of DSRC technology, and we will provide equipment to the FCC and fully support the agency's testing efforts set out in the *Public Notice*. Qualcomm looks forward to working with the FCC and all interested stakeholders to enable the successful deployment of DSRC technology and open additional spectrum for unlicensed Wi-Fi services in the 5.9 GHz U-NII-4 band.

CONTENTS

SUMMARY i

INTRODUCTION 2

DISCUSSION 3

I. Rechannelization Provides The Best Long-Term Solution For Spectrum Sharing Between DSRC And Unlicensed Wi-Fi Operations In The 5.850-5.925 GHz DSRC Band 3

A. Rechannelization Fully Protects DSRC Safety-of-Life Messages By Placing Them In Spectrum That Is Off-Limits To Unlicensed Wi-Fi Operations 3

B. Rechannelization Provides Two More 40 MHz Channels, One 80 MHz Channel And One 160 MHz Wide Channel For U-NII-4 Unlicensed Wi-Fi Operations 5

C. The FCC Can Set U-NII-4 OOBE Levels That Fully Protect DSRC Operations 6

D. DSRC Should Use 20 MHz Channels In The Shared 45 MHz Portion Of The Band To Enable Successful Sharing Between DSRC And Wi-Fi Operations 7

E. Rechannelization Does Not Require Any Hardware Changes, A Major Reworking Of DSRC Standards, Or Significant Retesting 9

II. The Detect-and-Avoid Proposal Will Not Protect DSRC From Interference And Will Require New Hardware And Extensive Testing To Ensure Successful Sharing 11

A. U-NII-3 OOBE Will Interfere With DSRC Safety Channel 172, Which The Detect-and-Avoid Proposal Leaves In Place 12

B. The Detect-and-Avoid Proposal Limits Greatly The Available Unlicensed U-NII-4 Spectrum 12

III. Assertions That Rechannelization Will Delay The Rollout Of DSRC Are Misplaced 13

A. The Detect-And-Avoid Proposal Requires Extensive Testing Prior To Deployment 13

B. The Fact That Changes To The DSRC Rules May Be Needed To Implement Rechannelization Is Not A Reason To Avoid The Better Proposal 14

CONCLUSION 17

Before the
FEDERAL COMMUNICATIONS COMMISSION
Washington, DC 20554

In the Matter of Revision of Part 15 of the Commission's Rules to Permit Unlicensed National Information Infrastructure (U-NII) Devices in the 5 GHz Band	ET Docket No. 13-49

COMMENTS OF QUALCOMM INCORPORATED ON PUBLIC NOTICE SEEKING TO REFRESH THE RECORD

QUALCOMM Incorporated ("Qualcomm") is pleased to comment on the Commission's *Public Notice* seeking input on sharing between Dedicated Short Range Communications ("DSRC") operations, which are a component of the Intelligent Transportation System ("ITS") wireless service, and unlicensed U-NII-4 operations in the 5.850-5.925 GHz band.[1] As explained herein, the rechannelization plan Qualcomm first proposed in May 2013[2] offers the best means of sharing the band while ensuring the long-term success of DSRC operations by moving safety-of-life messages to the upper portion of the DSRC band so they can operate in spectrum that remains exclusively allocated to DSRC while providing additional and much-needed wide bandwidth U-NII channels for Wi-Fi that is achieved by opening only the lower 45 MHz portion of the DSRC band for unlicensed Wi-Fi use on a secondary basis to DSRC.

---

[1] *See* FCC Public Notice, "Commission Seeks To Update And Refresh The Record In The "Unlicensed National Information Infrastructure (U-NII) Devices In The 5 GHz Band," ET Docket No. 13-49, FCC 16-68 (June 1, 2016) ("*Public Notice*").

[2] *See* Comments of Qualcomm Incorporated in ET Docket No. 13-49 (May 28, 2013).

INTRODUCTION

Qualcomm's rechannelization proposal is designed to satisfy two important policy objectives. *First and foremost*, the proposal fully enables and protects from harmful interference DSRC services, specifically DSRC safety-of-life communications. *Second*, the proposal provides additional contiguous spectrum for unlicensed Wi-Fi use at 5 GHz on a secondary, non-interfering basis to DSRC. Rechannelization aims to arrange the 5.850-5.925 GHz spectrum band more efficiently, in a manner that opens a portion of the band to unlicensed Wi-Fi use and prevents harmful interference to DSRC safety-of-life communications and enables the successful rollout of DSRC technology.

Rechannelization significantly reduces the time and effort to analyze co-existence of unlicensed Wi-Fi operations with DSRC safety applications and can allow the DSRC roll-out to proceed without delay. By taking a portion of the DSRC spectrum off the table for sharing with U-NII-4 operations, the rollout of DSRC safety services can occur broadly, rapidly, and without the threat of interference. Moreover, rechannelization can be implemented without any changes to DSRC hardware; a software modification is all that is needed.

Rechannelization also benefits unlicensed operations. 802.11ac W-Fi operations use channels of up to 160 MHz of contiguous bandwidth, and under the 802.11 channelization of the 5 GHz band, the uppermost 30 MHz of the DSRC band falls outside any 40/80/160 MHz channel. Thus, there is little, if any, tangible benefit in attempting to use this spectrum for a technology designed to use wider bandwidth 40/80/160 MHz channels, and, in fact, we do not believe that the upper 30 MHz would — even if allowed under the FCC's rules — ever be used for Wi-Fi. Placing the uppermost 30 MHz spectrum off limits to unlicensed use and providing exclusive use for DSRC safety-of-life services in that portion of the band will best protect these services without sacrificing spectrum needed for wide-bandwidth unlicensed Wi-Fi usage.

Accordingly, the main virtues of rechannelization are that it: (i) simplifies the necessary spectrum sharing R&D efforts and verification testing; and (ii) takes off the table the notion of sharing the spectrum on which DSRC safety-of-life services operate without impacting 802.11ac-based Wi-Fi operations because the uppermost 30 MHz portion of the 5.850 to 5.925 GHz DSRC band is not needed to complete any 40/80/160 MHz channel. Rechannelization can be implemented with minimal adverse impact on the successful rollout of critically important DSRC safety services while supporting the creation of up to four contiguous 160 MHz blocks of unlicensed spectrum in the expanded 5 GHz band for 802.11ac and 802.11ax Wi-Fi operations.

DISCUSSION

I. Rechannelization Provides The Best Long-Term Solution For Spectrum Sharing Between DSRC And Unlicensed Wi-Fi Operations In The 5.850-5.925 GHz DSRC Band

As a leading DSRC technology chipset provider, Qualcomm supports the rapid deployment of DSRC systems to improve roadway safety by enabling low-latency communications between vehicles, roadway infrastructure, and pedestrians to reduce vehicle collisions and improve traffic flow.[3] Qualcomm wants to ensure the long-term success of the technology and believes that rechannelization will enable successful spectrum sharing with future unlicensed usage of the 5.850-5.925 GHz DSRC band, as detailed below.

A. Rechannelization Fully Protects DSRC Safety-of-Life Messages By Placing Them In Spectrum That Is Off-Limits To Unlicensed Wi-Fi Operations

Rechannelization would provide the best protection for DSRC safety-of-life communications because it places such communications in spectrum that remains exclusively

[3] *See* Qualcomm Press Release, "Qualcomm Expands Industry Collaboration to Grow the Internet of Everything — Qualcomm increases customer momentum in the smart home, wearables, automotive, smart cities and health care segment," (May 14, 2015) *available at* https://www.qualcomm.com/news/releases/2015/05/14-0.

allocated to DSRC that also is as far away as possible, and thus avoids out-of-band emissions ("OOBE") interference from, unlicensed operations in the U-NII-3 band and in the new U-NII-4 band. This interference potential was present under the prior U-NII-3 OOBE limits and is likely to grow in light of the FCC's recent relaxation of those limits.[4]

An illustration of the rechannelization proposal is shown in Figure 1a and 1b below.

a. Existing DSRC Band Plan:

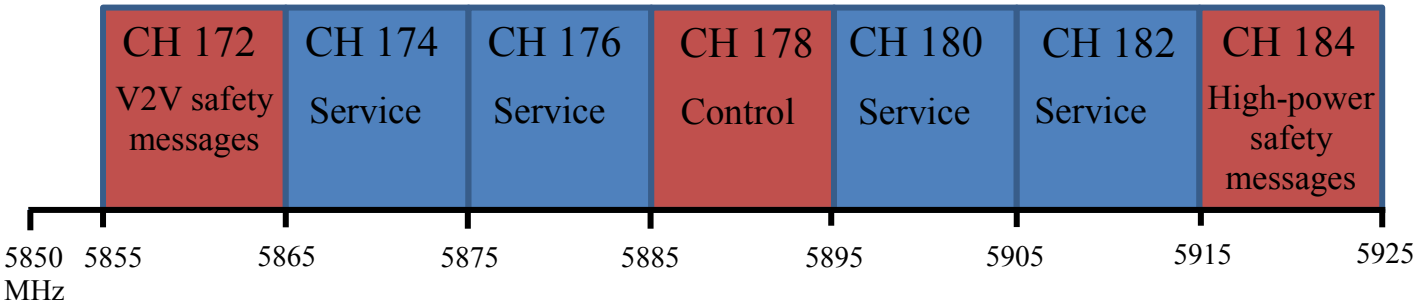

b. DSRC Band Plan Following Rechannelization:

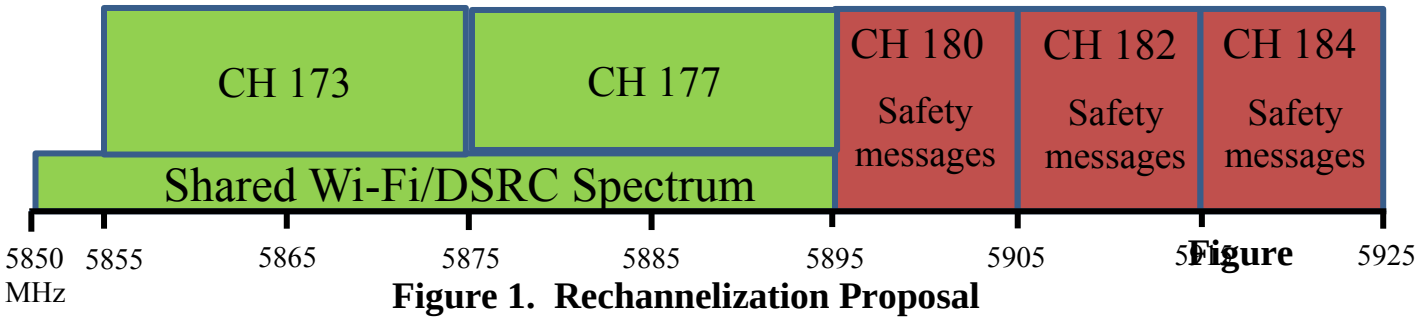

Figure 1. Rechannelization Proposal

As Figure 1 shows, rechannelization splits the DSRC band into two distinct blocks: (i) a lower 45 MHz block that runs from 5850 MHz to 5895 MHz and would be shared between non-safety-of-life DSRC messages and Wi-Fi operations in the new U-NII-4 band, and (ii) an upper 30 MHz

[4] *See* Revision of Part 15 of the Commission's Rules to Permit Unlicensed National Information Infrastructure (U-NII) Devices in the 5 GHz Band, *Memorandum Opinion and Order*, FCC 16-24, ET Docket No. 13-49 (rel. Mar. 2, 2016).

block that runs from 5895 MHz to 5925 MHz and carries DSRC safety-of-life messaging exclusively and would not be shared with any unlicensed U-NII-4 operations.

DSRC control channel 178 and safety channel 172 would be relocated to the upper portion of the DSRC band under the rechannelization proposal. Also, the upper portion would use 10 MHz-wide channels defined in the IEEE 802.11 standard. In the lower portion of the band, Qualcomm recommends using 20 MHz wide channels, as discussed in Section I.D below, because it would better enable sharing with 802.11ac operations that also use 20 MHz channelization.

B. Rechannelization Provides Two More 40 MHz Channels, One 80 MHz Channel And One 160 MHz Wide Channel For U-NII-4 Unlicensed Wi-Fi Operations

As shown in Figure 2 below, the rechannelization proposal provides substantial benefits for unlicensed Wi-Fi operations. Specifically, the proposal enables for unlicensed Wi-Fi use two additional 40 MHz channels, an additional 80 MHz channel, and an additional 160 MHz-wide channel, while only a single potential 20 MHz unlicensed channel, Channel 181, is made unavailable for unlicensed use.

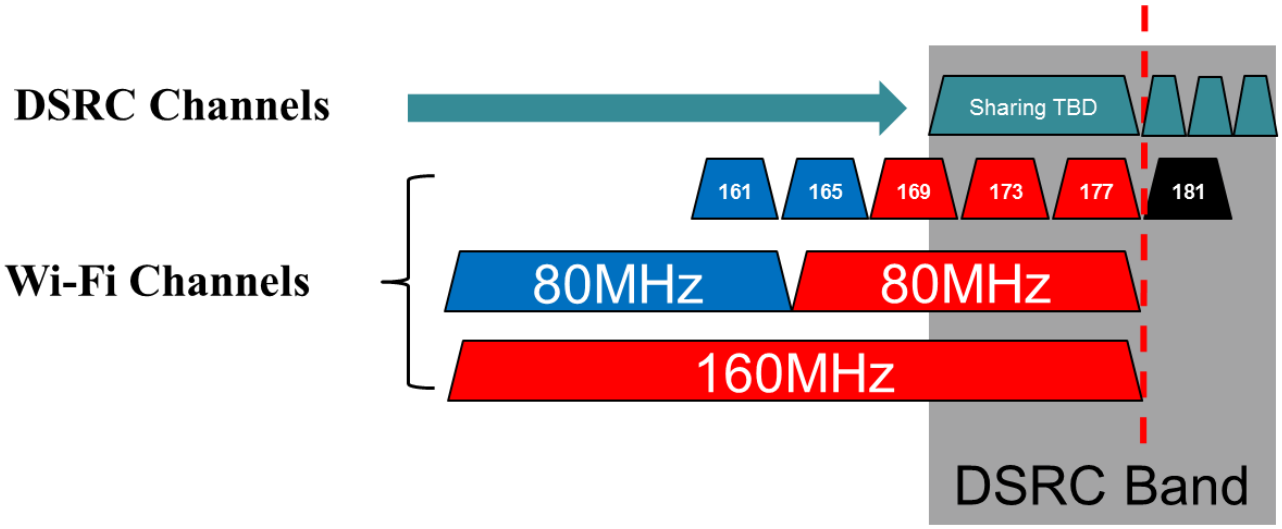

Figure 2. Benefits of Rechannelization

At the same time, the completion of two more 40 MHz channels, an additional 80 MHz channel, and an additional 160 MHz channel by adding 802.11 channels 169, 173, and 177, is a major benefit to 802.11ac Wi-Fi and future 802.11ax Wi-Fi operations.

C. <u>The FCC Can Set U-NII-4 OOBE Levels That Fully Protect DSRC Operations</u>

Qualcomm's rechannelization proposal limits U-NII-4 sharing with DSRC operations to a portion of the original DSRC allocation by allowing unlicensed Wi-Fi operations in the lower 45 MHz portion of the band on a secondary basis to DSRC. In this way, rechannelization allows the FCC to define a stricter U-NII-4 OOBE mask at the onset of U-NII-4 operations, given that the band is not currently open to unlicensed use, to fully protect DSRC safety-of-life operations located in the upper 30 MHz portion of the DSRC band. Rechannelization thus ensures these safety-of-life communications are not subject to interference that would occur with the detect-and-avoid proposal should an unlicensed 802.11ac Wi-Fi system fail to detect DSRC signals.

D. DSRC Should Use 20 MHz Channels In The Shared 45 MHz Portion Of The Band To Enable Successful Sharing Between DSRC And Wi-Fi Operations

Qualcomm's rechannelization proposal recommends that DSRC use 20 MHz channelization in the shared portion of the 5.9 GHz band to allow for successful sharing with unlicensed operations because it will increase the probability that Wi-Fi, which also uses 20 MHz channel blocks, will sense and yield to active DSRC operations. DSRC safety-of-life applications would still use 10 MHz-wide transmissions in the upper portion of the DSRC band where DSRC operations would remain exclusive.

It is easier for unlicensed 802.11ac Wi-Fi devices to detect and yield priority to DSRC operations when DSRC uses the same 20 MHz-wide channels as 802.11ac Wi-Fi and future 802.11ax Wi-Fi operations. 802.11ac (and .future 11ax) and DSRC "speak" the same 20 MHz "language," 802.11ac (and future .11ax) devices can detect DSRC preambles, decode DSRC packets, and check for bits that identify them without hardware modifications. And, by using existing Quality of Service enhancement mechanisms already in the 802.11 standards, *e.g.*, the priority mechanism in the IEEE 802.11e standard, DSRC can be given higher priority should the Commission decide to prioritize non-safety-of-life DSRC messages in the shared portion of the rechannelized band as Qualcomm recommends.

Qualcomm believes that DSRC non-safety-of-life messaging in the shared portion of the band should be given priority over Wi-Fi and other unlicensed operations in the shared portion of the band, but we recognize that the Commission is continuing to examine this issue.[5] Regardless of the Commission's ultimate decision, it is critically important that the FCC ensure safety-of-

[5] *See Public Notice* at 8; *see also* FCC Commissioner O'Rielly Blog, Defining Auto Safety of Life in 5.9 GHz (June 8, 2016) available at https://www.fcc.gov/news-events/blog/2016/06/08/defining-auto-safety-life-59-ghz.

life communications are reliably and timely transmitted and received, so appropriate action can be taken. The rechannelization proposal best achieves this by placing those communications in spectrum that remains exclusive to DSRC.

Coexistence between 20 MHz (and possibly wider bandwidth) 802.11ac Wi-Fi operation and 10 MHz DSRC operations — which the detect-and-avoid proposal faces across the entire 5.850-5.925 GHz DSRC band — would be much more challenging. 802.11ac Wi-Fi devices would need additional hardware to detect 10 MHz DSRC packets in multiple channels, and new spectrum sharing techniques would need to be developed and tested. While existing 802.11n and .11ac DSRC chipsets generally can detect 5, 10 and 20 MHz-wide preambles, only a single packet bandwidth can be detected at any given time depending on the operational mode. For example, a chip configured in 10 MHz DSRC mode is not able to detect 20 MHz or 5 MHz packets. Also, 802.11ac and 802.11ax do not even define 10 MHz signal detection or the means for handling 4 or more simultaneous spectrum sensing operations. To be clear, simultaneous detection of multiple bandwidths is possible, but it increases device complexity and cost.

There are other technical challenges to overcome when two 802.11 systems share the same spectrum but operate at different bandwidth modes. For one, the timing parameters (*e.g.*, interframe spacing, backoff window) are scaled differently. This makes packet-based sharing extremely difficult (if not impossible) without significantly altering chipset designs and making substantial modifications to 802.11 Wi-Fi standards. In addition, detecting a 10 MHz waveform when it is not within the receiver's filter bandwidth — which is necessary for the detect-and-avoid proposal — is very costly since typical WLAN devices use analog filters to remove energy that is outside the band of interest. To detect out-of-band DSRC signals while complying with the strict blocker requirements, WLAN chipsets would require a secondary analog receiver path,

which is another costly element. Thus, Qualcomm believes that development and deployment of a viable "detect-and-avoid" solution would require considerable time, effort, and expense.

For these reasons, Qualcomm recommends that DSRC use 20 MHz channelization in the lower shared portion of the DSRC band, which can be deployed quickly and will provide improved performance and spectrum sharing with unlicensed operations, particularly in light of the massive number of Wi-Fi devices with 20 MHz channelization that are currently deployed and in the supply chain.

Finally, whatever path the federal government decides to take, rechannelization or detect-and-avoid, the Commission should provide technology neutral regulations and rely upon industry-led standards efforts to support sharing. Such regulations and standards should provide substantial flexibility.[6]

E. Rechannelization Does Not Require Any Hardware Changes, A Major Reworking Of DSRC Standards, Or Significant Retesting

Rechannelization can be achieved without any changes to DSRC chipsets or related hardware. Movement of the 10 MHz-wide safety-of-life channel to the upper portion of the band and implementation of 20 MHz channelization in the lower, shared portion of the band can be achieved though software changes and be carried out quickly. In addition, the current SAE J2945/1 DSRC standard, which covers on-board requirements for V2V safety, can be readily revised to support a safety channel in the upper portion of the DSRC band.[7]

Moving the safety channel to the upper portion of the band would not require a redo of the testing that has been done to date. Rather, performance verification of operating the safety

---

[6] *See Public Notice* at 7-8.

[7] The SAE J2945/1 DSRC standard has only 3 references to channel 172. The first two are pointers to the FCC's DSRC rules, and the last is a table reference to the FCC rules. These can be revised to reference a relocated safety channel in the upper portion of the DSRC band.

channel in the upper portion of the band would be minimal. Applications and DSRC performance already extensively tested by the U.S. Department of Transportation and the auto industry could be readily shown to still hold. Indeed, radio characteristics of DSRC band transmissions are relatively uniform across the 75 MHz-wide DSRC band at 5.850-5.925 GHz. Hence, the channel and radio behavior of channel 172 is similar to the channels in the upper portion of the DSRC band. The new operating frequency would be only 50 MHz away, and thus operate with nearly identical propagation characteristics. While some testing may be needed to measure the impact of DSRC traffic in adjacent channels, such measurements may have been carried out already since DSRC applications have always planned to use all 7 DSRC channels

In addition, as explained above, the interference conditions due to OOBE from U-NII-3 operations will differ based upon the frequency separation to the upper and lower band-edges. Maintaining safety-of-life operations in Channel 172 and implementing the detect-and-avoid proposal faces greater technical risks than moving the safety operations to exclusive spectrum in the upper portion of the band.

Testing will be needed to verify any sharing proposal because it is essential that the introduction of unlicensed operations into the DSRC band not cause harmful interference. Qualcomm believes that testing to demonstrate the viability of rechannelization would be much less intensive than the testing that would be required to verify the viability of the detect-and-avoid proposal — particularly because safety-of-life communications would occur in channels that are shared with unlicensed Wi-Fi operations. With rechannelization, on the other hand, the safety-of-life channel would reside in spectrum that unlicensed devices are not permitted to use. The detect-and-avoid proposal also requires monitoring of multiple 10 MHz channels

simultaneously[8] and would face the detection challenges noted above[9] and necessitate a substantial amount of verification testing.

In sum, rechannelization can be implemented relatively quickly because it does not require hardware changes or significant changes to the standards, and it would require less verification testing than the detect-and-avoid proposal, and unquestionably provides the best long-term solution to ensure the success of upcoming DSRC deployments.

II. The Detect-and-Avoid Proposal Will Not Protect DSRC From Interference And Will Require New Hardware And Extensive Testing To Ensure Successful Sharing

In sharp contrast to the rechannelization proposal that fully protects DSRC safety-of-life messages by placing them in spectrum that is off-limits to unlicensed operations, the detect-and-avoid proposal opens the entire DSRC band to sharing with unlicensed operations.[10] This exposes all DSRC operations, both safety-of-life and non-safety-of-life, to potential interference from U-NII-4 operations should U-NII-4 equipment fail to detect DSRC communications. In addition, by leaving DSRC safety channel 172 in place, the detect-and-avoid proposal leaves channel 172 safety-of-life messages subject to interference caused by U-NII-3 OOBE, which the Commission recently relaxed. Also, as explained above, implementation of detect-and-avoid will require new Wi-Fi hardware to simultaneously detect 10 MHz-wide signals in multiple DSRC channels.

---

8 *See Public Notice* at 6.

9 As noted previously, detection probability can never be 100%, and its maximization can drive false detection probability to levels that greatly restrict the band's utility for Wi-Fi.

10 *See* detect-and-avoid proposal in Cisco *ex parte* filing in ET Docket No. 13-49 (Dec. 23, 2015).

A. U-NII-3 OOBE Will Interfere With DSRC Safety Channel 172, Which The Detect-and-Avoid Proposal Leaves In Place

The detect-and-avoid proposal leaves DSRC safety-of-life channel 172 where it currently resides and is subject to interference from existing U-NII-3 unlicensed Wi-Fi operations. Under this proposal, DSRC operations also may suffer interference from U-NII-4 Wi-Fi operations if the DSRC signals are not detected. As filings opposing a pending Petition for Reconsideration of the U-NII-3 OOBE levels[11] noted, the FCC can protect DSRC channel 172 by moving it to Channel 182, "which is more spectrally distant from the U-NII-3 band edge" and hence experiences much lower U-NII-3 OOBE.[12]

B. The Detect-and-Avoid Proposal Limits Greatly The Available Unlicensed U-NII-4 Spectrum

Because it would require Wi-Fi operations to avoid the entire band when DSRC packets are detected, the detect-and-avoid proposal greatly restricts the band's availability for unlicensed Wi-Fi use. Based on our technical assessment of the interference environment, widely-deployed DSRC roadside infrastructure and DSRC-equipped vehicles will prevent unlicensed users from accessing the entire U-NII-4 band within vehicles and in and around homes and businesses up to several hundred meters away from DSRC communications. This will impact the overwhelming majority of Wi-Fi systems in use today near roadway infrastructure and vehicular traffic. Under the detect-and-avoid proposal, if DSRC signals are detected anywhere within the 5.850-5.925 GHz band, Wi-Fi operations must avoid the entire band.

---

[11] *See* Petition for Reconsideration filed by the Association of Global Automakers, Inc. and the Alliance of Automobile Manufacturers, ET Docket No. 13-49 (filed May 6, 2016).

[12] *See* Opposition of Wireless Internet Service Providers Association ("WISPA") to Petition for Reconsideration in ET Docket No. 13-49 (June 23, 2016).

III. Assertions That Rechannelization Will Delay The Rollout Of DSRC Are Misplaced

Implementation of the rechannelization proposal will not delay the deployment of DSRC. As a leading developer of DSRC chipsets and Wi-Fi chipsets, Qualcomm can rapidly integrate its proposal into its DSRC and Wi-Fi products. In fact, no hardware changes are necessary to support rechannelization. Moving the channels as proposed and using 20 MHz channelization in the shared portion of the DSRC band can be supported via software changes.

Any claim that the rechannelization proposal will require more testing than the detect-and-avoid proposal is simply untrue. Placing safety-of-life communications in a portion of the DSRC band that is off limits to U-NII-4 operations will better protect those communications and eliminate any chance of interference that would occur when U-NII-4 systems do not detect DSRC signals and begin transmissions.

A. The Detect-And-Avoid Proposal Requires Extensive Testing Prior To Deployment

The detect-and-avoid proposal will require testing to ensure that it accurately sees and avoids DSRC communications, including critically-important safety-of-life communications in DSRC Channel 172. The proposal is faced with the many technical challenges described above in Section I.D., and includes determining the appropriate DSRC signal detection levels.

In addition, IEEE P802.11 DSRC Coexistence Tiger Team members recognized that the detect-and-avoid proposal would require changes to the behavior of 802.11ac systems because the current Clear Channel Assessment ("CCA") is not defined for 10 MHz channels. "[T]he secondary CCA mechanisms defined in 802.11ac do not comprehend secondary devices using Carrier Sense in multiple channels, certainly not the seven channels in DSRC; in the case of DSRC coexistence, secondary CCA at Carrier Sense levels (<-85dBm) would have to be

performed in multiple channels simultaneously. This would require changes in the base 802.11 specification and would add complexity to existing 802.11ac chipsets."[13]

Also, even more troubling was the Tiger Team's recognition that "[e]ven if Carrier Sense could be demonstrated to operate at levels below -90dBm in 10 MHz channels, **there is no guarantee that modified 802.11ac systems would not impact DSRC operation**. Adequate testing would be required to make sure that deployment of these 802.11 systems would not impact the critical functions of DSRC systems, particularly collision avoidance."[14]

Thus, no amount of testing will eliminate the risk of interference that remains by leaving the safety-of-life communications in DSRC Channel 172 that subjects these communications to OOBE interference from U-NII-3 operations that will be omnipresent in vehicles and in parks, libraries, homes and businesses. Qualcomm estimates that Channel 172 could experience interference from OOBE levels generated by U-NII-3 operations at a distance that is several hundred meters away.

B. The Fact That Changes To The DSRC Rules May Be Needed To Implement Rechannelization Is Not A Reason To Avoid The Better Proposal

Advocates who favor the detect-and-avoid proposal claim that the FCC should not implement the rechannelization proposal because it may require changes to the DSRC rules. However, that is not a sound reason to implement an inferior proposal. The Commission last modified the DSRC rules a decade ago — before the widespread deployment of the smartphone.

---

[13] *See* IEEE P802.11 1 Wireless LANs, "Final Report of DSRC Coexistence Tiger Team," doc.: IEEE 802.11-15/0347r0 (Mar. 2015) *available at* https://mentor.ieee.org/802.11/dcn/15/11-15-0347-00-0reg-final-report-of-dsrc-coexistence-tiger-team-clean.pdf ("Tiger Team Final Report") at 7.

[14] *Id*. (emphasis added).

Since that time, as Commissioners Rosenworcel and O'Rielly note, "there have been enormous changes in technology."[15]

There is no question that the DSRC regulations would greatly benefit by minor modifications that recognize these advances and take advantage of them. For example, the DSRC rules do not contemplate the transmission of safety messages directly to pedestrian/user devices to alert them of potential road hazards. The FCC should revisit its DSRC rules to provide for this capability and others given the extensive public benefits of such applications and services.

Qualcomm believes that any such changes to the DSRC rules would be a logical outgrowth of the instant proceeding and thus can be implemented without an additional Notice.[16] If the FCC deems it necessary, however, it can issue a *Further Notice of Proposed Rulemaking*, collect comments and reply comments and issue final rules in less than a year's time — and well before the three stages of testing contemplated by the *Public Notice* are completed.

Finally, while Qualcomm is working to enable the rapid rollout of DSRC technology, we also are developing other technologies to improve roadway safety through implementation of cellular-based Vehicle-to-Everything ("C-V2X") technologies that encompass a suite of capabilities, including V2V, vehicle-to infrastructure ("V2I"), vehicle-to-network ("V2N"), and

---

15 *See Public Notice*, Joint Statement of Commissioners Rosenworcel and O'Rielly.

16 *See, e.g.*, Revision of the Commission's Rules To Ensure Compatibility with Enhanced 911 Emergency Calling Systems; Petition of City of Richardson, Texas, *Order on Reconsideration*, CC Docket No. 94-102, FCC 02-318, 17 FCC Rcd 24282, 24290-91 (rel. Nov. 26, 2002) (holding that comments received in response to Public Notice constitute valid notice under the Administrative Procedure Act).

vehicle-to-pedestrian ("V2P") applications.[17] Qualcomm believes that an "all of the above" approach to vehicle, passenger, and pedestrian safety that uses DSRC, cellular, and other wireless communications capabilities will best serve America's roadway transportation system today and well into the future.

[17] *See* Qualcomm Cellular V2X website *available at* https://www.qualcomm.com/invention/technologies/lte/advanced-pro/cellular-v2x (*last accessed* July 7, 2016).

CONCLUSION

Qualcomm looks forward to working with the FCC and U.S. Department of Transportation to enable the deployment of widespread, interference-free DSRC communications systems that make America's roadways safer and more efficient and to open up a portion of the DSRC band for unlicensed Wi-Fi operations. Both the successful deployment of DSRC systems and the release of additional 5 GHz unlicensed spectrum are incredibly important goals, and Qualcomm believes that the rechannelization proposal offers the best means of successfully achieving them both.

Respectfully submitted,

QUALCOMM INCORPORATED

By: _____

Dean R. Brenner
Senior Vice President, Government Affairs

John W. Kuzin
Vice President & Regulatory Counsel

1730 Pennsylvania Avenue, NW
Suite 850
Washington, DC 20006
202-263-0020
Attorneys for QUALCOMM Incorporated

Dated: July 7, 2016