modifications should be made only if they do not degrade the reception by present unmodified NTSC receivers. The enhanced NTSC receiver and HDTV receiver can make use of the same modifications. It is very desireable that a specification for a new format be established quickly so that manufacturers can build HDTV and enhanced receivers. NYIT recommends that a new NTSC transmission standard should be allowed, but may not be mandatory. The modifications to NTSC, as well as the augmentation necessary for HDTV should be agreed on by the broadcast industry. Efforts towards this goal are underway at NAB, MST, SMPTE, EIA and ATSC. These efforts should be encouraged. NYIT commends the Commission for its efforts to establish standards that are in the best interests of both the American public and broadcasting industry.

VI. Policy Issues

NYIT has refrained from providing specific answers, at this time, to the questions asked regarding public issues. Our recommendations on spectrum allocation issues, mandatory NTSC standards, etc. have been discussed previously in this submission. However, we offer the following general observation:

HDTV will certainly be available by VCR, possibly cable and in the long run, by digital broad-band fiber-optic cable. Without compatible augmentation to high quality HDTV, the terrestrial broadcast industry will eventually suffer the economic fate of AM

radio, or of a TV station limited to black-and-white broadcasts. In such a case, HDTV will be available only to that portion of the population affluent enough to pay for its distribution by other means. Loss of audience by terrestrial broadcast stations will result in lower income and inferior service. This is not in the best interest of the American public. Distribution would become a "two tiered" system in which low income families would never have the benefit of "free" HDTV distribution.

VIV. Conclusion

The concerns of the Commission on the future of the terrestrial broadcast industry are well founded. Advanced and HDTV technology will soon be made available to the public with several forms of distribuiton. It is in the public interest that the American viewers also have the opportunity to receive high quality HDTV by terrestrial broadcast.

NYIT respectfully requests, that the Commission carefully consider the NYIT (Glenn) system and support NYIT's efforts to provide compatible terrestrial HDTV service. Therefore, we request that the Commission reserve the present VHF and UHF television broadcast spectrum allocation, so that HDTV augmentation channels can be provided for terrestrial broadcasters.

The NYIT (Glenn) HDTV transmission system deserves the

strongest consideration, since it is compatible with the existing NTSC transmission standard and provides full HDTV resolution. The system can transmit program material produced in the 1125-line, production format, yet can grow to higher resolution with the use of progressively scanned cameras and displays. The system requires, for HDTV transmission, a separate augmentation channel. This channel need not to be adjacent in frequency and need not be co-located with the NTSC transmission antenna.

We would like to thank the Commission for providing us the opportunity to comment on this very important, national issue.

Respectfully submitted,

NEW YORK INSTITUTE OF TECHNOLOGY
Service and Technology Research Center
8000 N. Ocean Drive
Dania, FL 33004

William E. Glenn

William E. Glenn, Ph.D.
Director

November 18, 1987

Comments of the

New York Institute of Technology

MM Docket No. 87-268

APPENDIX

1. **New Developments In a Compatible High Definition Television Transmission System**; Dr. William E. Glenn, 1987 NAB Engineering Conference Proceedings.

2. **HDTV Compatible Transmission System**; William E. Glenn and Karen G. Glenn, Reprint SMPTE Journal, March 1987.

3. **Imaging System Design Based on Psychophysical Data**; W.E. Glenn, K.G. Glenn, and C.J. Bastian, Proceedings of the SID, Vol 26/1, 1985.

4. **Improved HDTV with Compatible Transmission**; William E. Glenn, and Karen G. Glenn, Third International Colloquium on Advanced Television Systems, Ottawa, Canada, October, 1987.

NEW DEVELOPMENTS IN A COMPATIBLE HIGH DEFINITION TELEVISION TRANSMISSION SYSTEM

Dr. William E. Glenn
New York Institute of Technology
Dania, Florida

ABSTRACT

A compatible HDTV transmission system is under development at NYIT. This paper describes the resolution that can be achieved, the signal format, how compatibility of aspect ratio can be accomplished, and how the display can be provided with progressive scan.

Introduction

In previous years a compatible HDTV transmission system has been described.[1,2] This system has been designed based on exploiting data gathered from extensive psychophysical measurements of vision. The transmission consists of a standard 525-line color signal, that we will call "base-band", plus a second channel that contains detail information. This second "detail" signal contains all of the information necessary to upgrade a standard 525-line image to full resolution HDTV. The second signal is relatively narrow- band, since it is transmitted at low frame rates and uses diagonal sampling. This system lends itself to the use of a progressively scanned detail camera tube and can be easily displayed with progressive scan. Under these conditions the sharpness of the image is higher than HDTV images derived from interlaced cameras.

This paper addresses a number of questions asked about the system - namely:

1. What is the transmission spectrum?
2. How does one prevent registration problems in the image caused by propagation delay differences between the base transmission and detail signal?
3. How is it possible to make the 3x4 aspect ratio of NTSC compatible with the 3x5 aspect ratio of HDTV?
4. How can progressive scan in the camera and in the display be used without producing motion artifacts?
5. What is the resolution achievable with this system?

Transmission Format

The base-band channel of the transmission is a 525-line color signal. This would be a standard NTSC signal for terrestrial broadcast and cable transmission. For satellite transmission, it could be in NTSC format or, alternatively, in analog component format in order to yield a better signal-to-noise ratio. The additional detail transmission is in analog component format in all cases. Many two-channel bandwidth systems require that the channels be adjacent and that the entire spectrum be transmitted from a single antenna location. This is not a restriction for the two channels we propose to use. In many cases the detail transmission can be adjacent in the spectrum to the base-band signal. This would probably be the case for satellite, pre-recorded media, and for terrestrial transmission where an adjacent channel is available. When an adjacent channel is used, the detail transmission can use the carrier, synch and color burst of the base channel.

For terrestrial transmission and in cable transmission, it may not be possible to locate the detail transmission adjacent in frequency to the base channel. It may also be desirable to have the detail antenna at another location than the base channel antenna. For example, a VHF station may have its detail transmission in the UHF band. This is shown in the block diagram of Figure 1. In this case a code in vertical blanking is transmitted on the base channel that tells the HDTV receiver where to tune to find the corresponding detail transmission. If no detail is received (i.e., if the UHF signal is too weak or if the station does not have a detail transmission), the HDTV receiver will simply display the NTSC signal scan-converted to 1125 lines, but

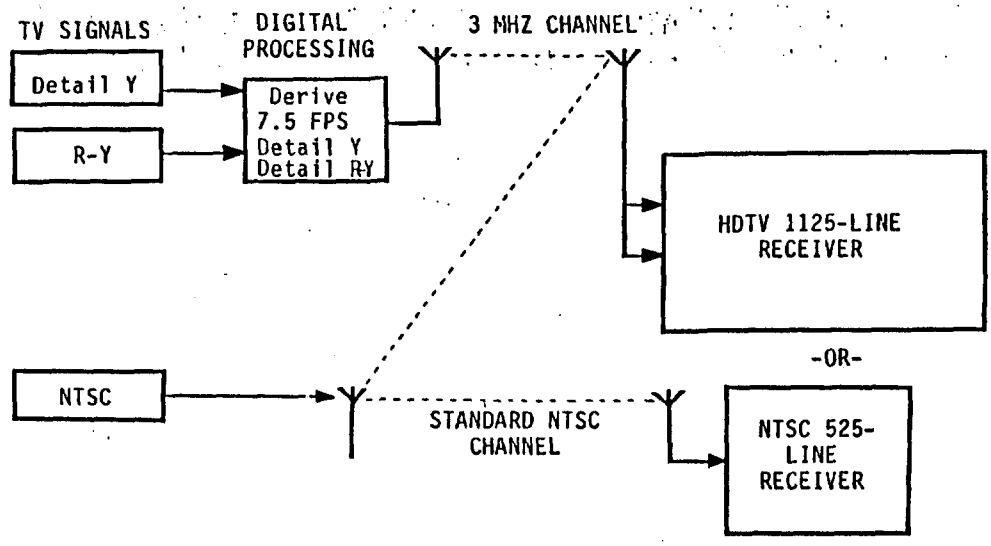

Figure 1. Proposed HDTV Compatible Transmission System

at standard resolution.

In the case of a non-adjacent detail transmission, the second signal has its own carrier, frame index and burst. Therefore transmission path delays for detail need not correspond to those of the base signal. The detail is clocked into a store in the receiver, based on its frame index and burst. It is clocked out, based on the synch and burst of the base-band transmission. Care must be taken to design the frame index code and burst signals so that they are at a lower amplitude than the video signal. This will minimize adjacent-channel and co-channel interference.

The detail signal is diagonally sampled as shown in Figure 2. The sampling is done at a clock rate of 3 x 3.58 MHz and transmitted with a bandwidth of 5.3 MHz and a frame rate of 15 fPS progressively scanned. If further bandwidth compression is needed a frame rate of 7.5 fPS can be used for detail. If 7.5 fPS is used, two stations can time-share a channel. Alternatively, half the clock frequency can be used with a detail bandwidth of 2.7 MHz.

The resolution of the NTSC, B-Y color signal is adequate for the B-Y signal in HDTV. However, the R-Y detail signal in NTSC has inadequate resolution for HDTV. Therefore we propose to transmit an additional R-Y detail signal along with the detail luminance transmission. This R-Y detail signal is derived from the R, G, B camera.

Compatibility of Aspect Ratio

Although 525-line images have a 3x4 aspect ratio, and 1125-line HDTV images have a 3x5 aspect ratio, compatibility between these two formats is possible. Figure 2 depicts a method for achieving aspect ratio compatibility. The 525-line image allows video to invade the horizontal blanking interval so that active video lasts for 56 microseconds instead of 52 microseconds. It starts immediately after burst and ends immediately before H synch. This provides an additional 8% more horizontal width. This part of the signal will be blanked by the 525-line receiver, but displayed by the 1125-line receiver. Since the HDTV receiver must scan convert the 525-line signal to 1125-line format, its time-base correction can make H blanking in the 1125-line display any interval needed by the picture tube.

In scan converting the 525-line image to 1125 lines, line interpolation is used. The low resolution portion of the HDTV image is obtained by scan converting the 525 line image to 1125 line format. This process uses 440 active lines of the 525-line format with a scan conversion ratio of 2.33 to 1. This provides 1024 active lines in the HDTV display, derived from 88% of the lines in the NTSC signal. This "crops" the height of the 525-line image by 12%. The combination of the 8% increased width and 12% decreased height provides the HDTV receiver with a 3x5 aspect ratio. This process has the advantage that only 8% of the width and 12% of the height need be protected when

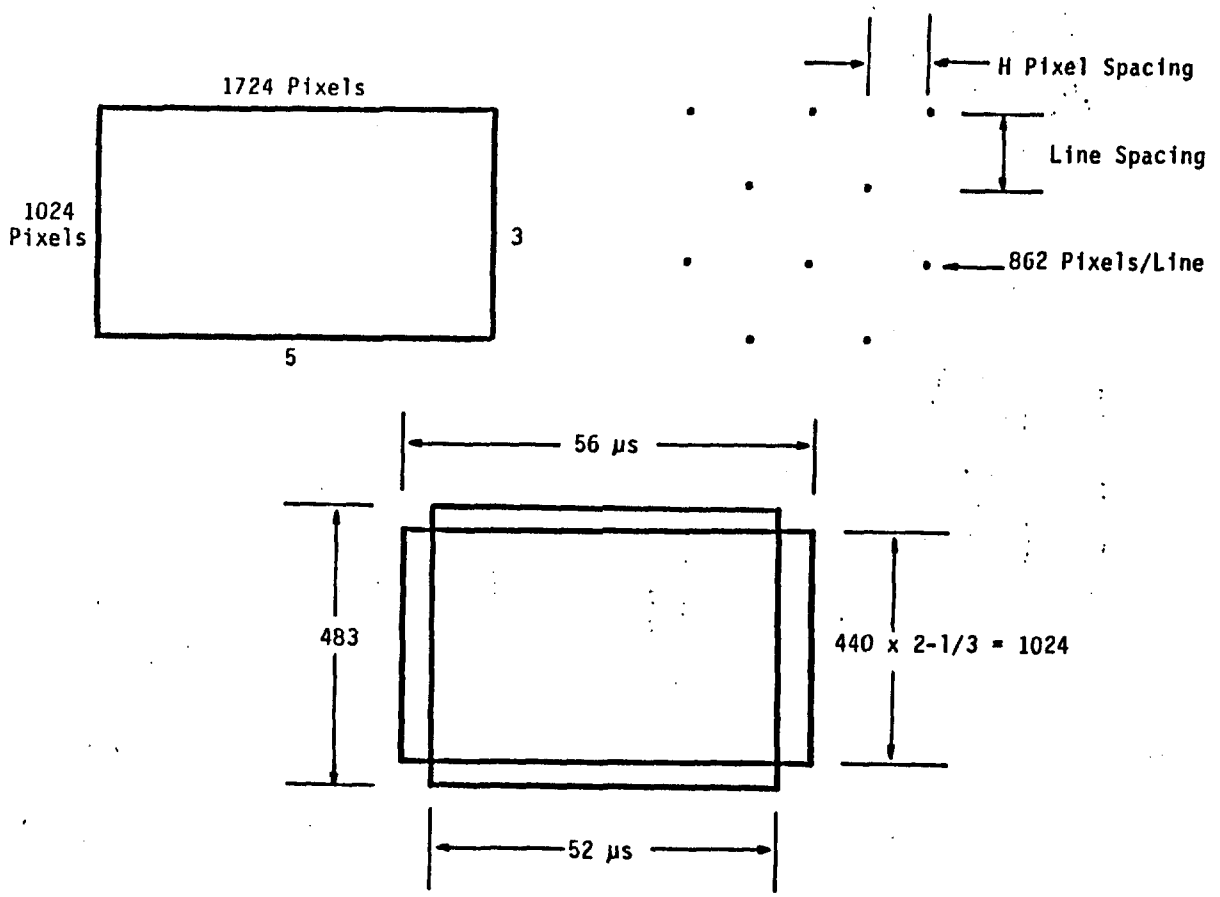

Figure 2. (Top Left) HDTV Detail Signal Pixel Format.
(Top Right) Magnified View of Pixel Format.
(Bottom) Method for Achieving Aspect Ratio Compatibility for 3x4 and 3x5 Video Signals [See Text for Explanation]

shooting program material to be displayed in either format.

Camera with progressively scanned detail

It has long been recognized that camera tubes provide much higher vertical resolution if they are progressively scanned. The signal processing techniques used by this system make it possible to produce a color HDTV camera that uses progressive scanning for the detail signal. Because of the slower scan rates for the detail sensor, the bandwidth and sensitivity of this type of camera can be improved over that of a standard interlace-scanned HDTV camera.

An HDTV camera has been constructed as shown in Figure 3, and was demonstrated at the 1986 NAB convention. It uses a standard 525-line R, G, B camera with a fourth tube progressively scanned at 15 fields/sec (fPS) in order to derive detail information. The high-definition camera signal is spatially filtered with a 2-dimensional digital matrix to provide the detail image. The temporal response produced by integration on the face of the camera tube is adequate for 15 fPS detail signals. However, if a 7.5 fPS detail signal is used, it is temporally filtered using frame stores from the 15 fPS signal. Using the lower frame rates necessitates "shaping" the temporal response by oversampling and pre-filtering temporally, to avoid visible temporal aliasing of detail information.

HDTV Receiver

In the receiver a monitor with 1125 lines/60 fields inter-laced can be used. Alternatively, the NYIT system can easily provide signals to be used in a progressively scanned display with 1125 lines/60 frames per second.

Compared with the interlace display, a progressive display eliminates interline

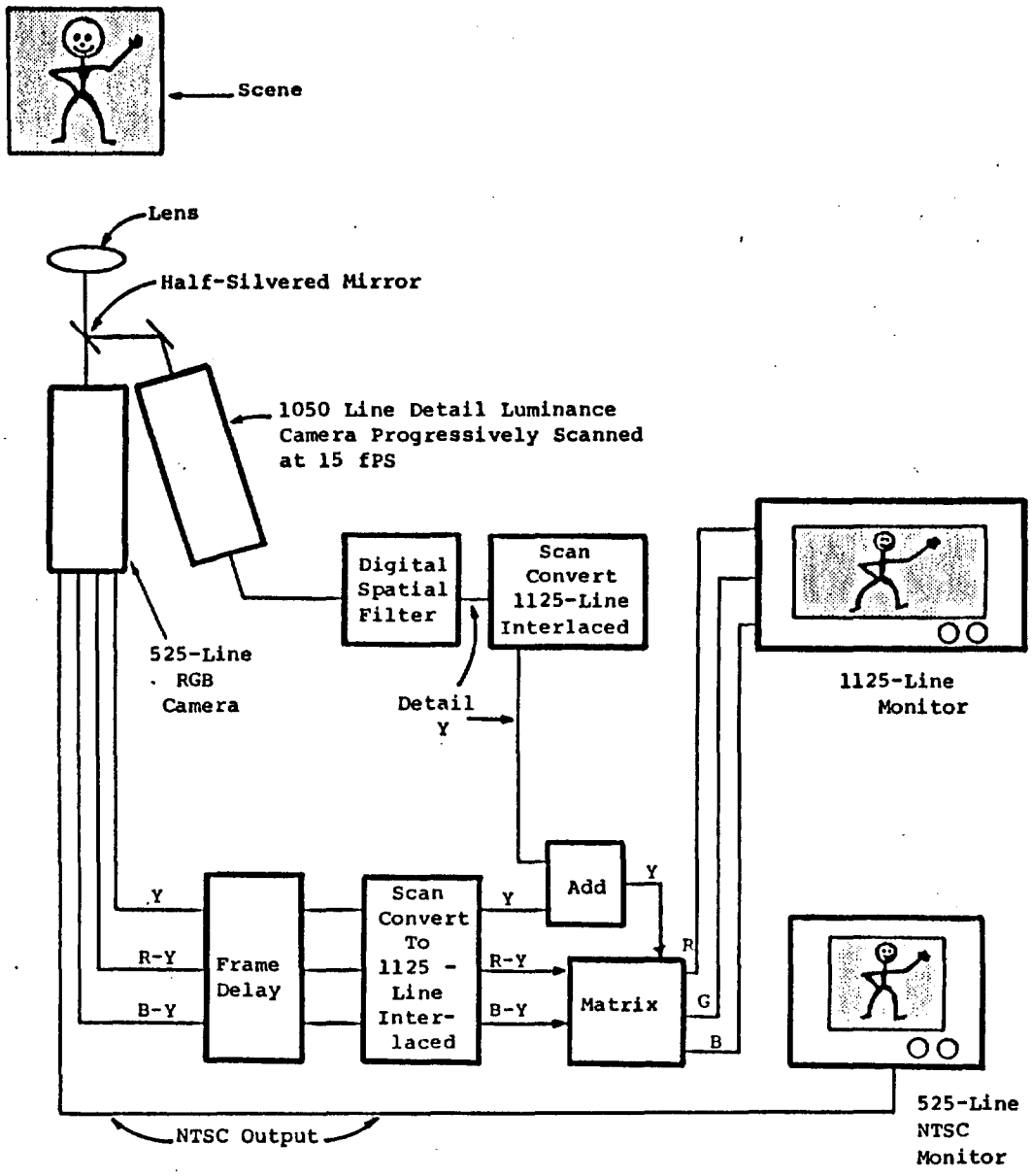

Figure 3. NYIT's Dual Channel HDTV Camera with its Digital Signal Processing.

flicker, and reduces the visibility of the field-line structure that is noticeable when a viewer makes vertical eye movements.

Other HDTV systems using progressive displays have found it necessary to use motion-adaptive processing in the receiver. This avoids the intolerable motion artifacts that stem from using information derived from the frame to produce an 1125-line field. If only the current field information is used, the system has good motion rendition, but suffers a loss in vertical resolution.

If, however, low resolution information is derived entirely from the current field, and the remaining detail information is derived from the stored detail signal, the display can then have progressive scanning at full resolution without motion artifacts.

A block diagram of the HDTV receiver with an interlaced display is shown in Figure 4. A signal is produced that drives a standard 1125-line HDTV interlaced monitor. The 525-line signal is scan-converted to 1125-lines interlaced format using line interpolation. All of the

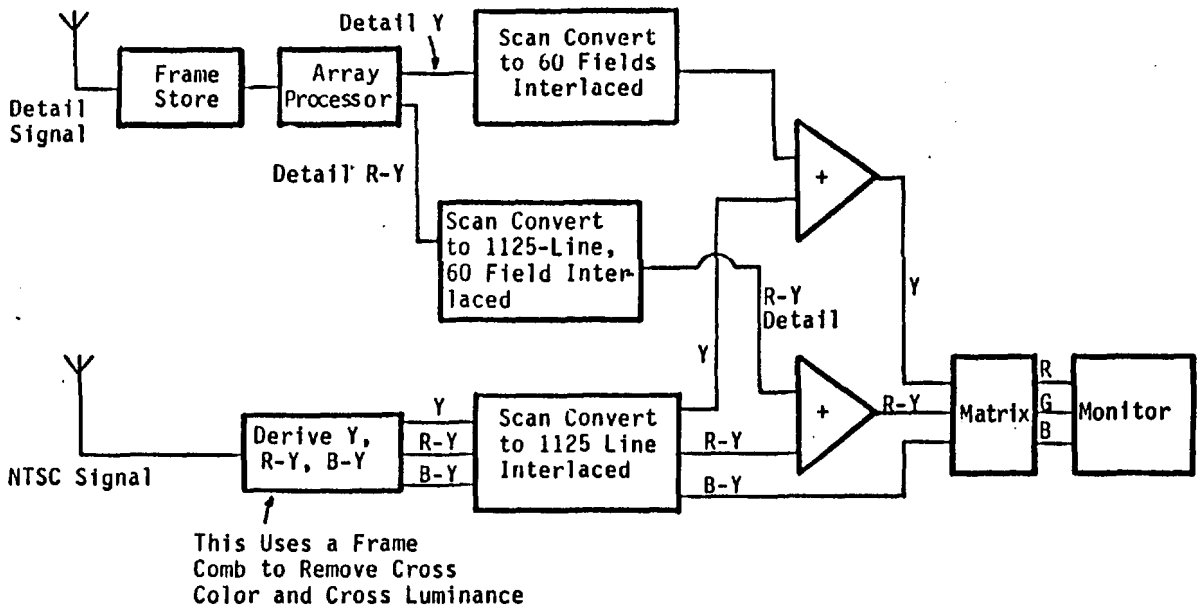

Figure 4. Compatible HDTV Receiver Signal Processing with Interlaced Display.

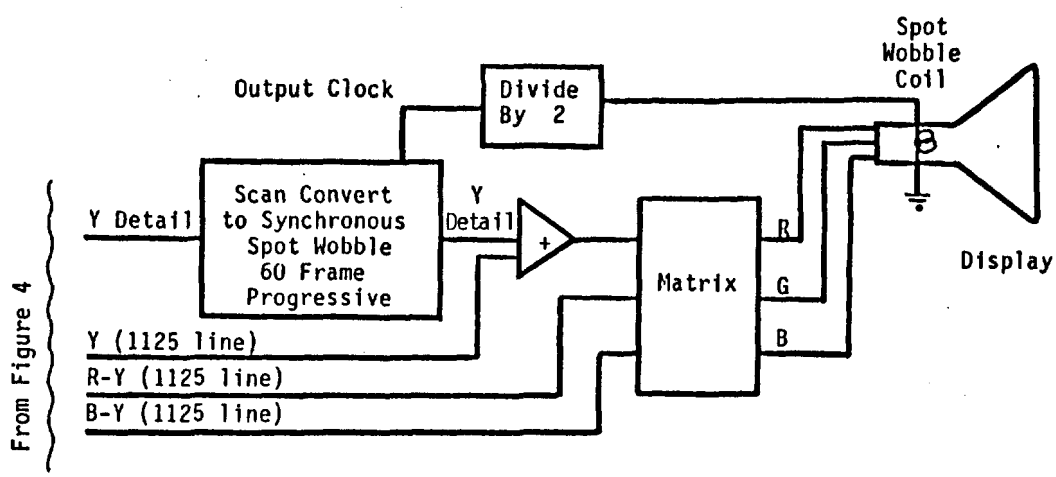

Figure 5. Progressive Display Option for Compatible HDTV Receiver (Signals for This Block Diagram Derived from Figure 4)

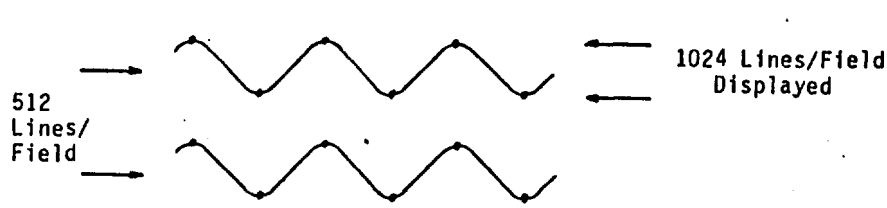

Figure 6. Progressive Display Pattern Using Synchronous Spot Wobble to Display Two Lines Per Horizontal Scan.

displayed low-resolution information is derived from the current field of the 525-line signal. The stored 1125-line detail signal is scan converted to 1125-lines interlaced, and simply added to the other signal for display.

In Figure 5 a block diagram of a system using progressive scan is provided. A standard 1125-line interlaced monitor is still used at the same scan rates as above. However, it is equipped with a small deflection coil that will wobble the spot vertically by one line-width at a frequency of half the output clock of the detail store. Because of the diagonal sampling, two lines can be clocked out during one scan as shown in Figure 6. The 525-line signal is scan-converted to this new format as before. However, two of the detail lines are clocked out of the detail store in alternate dot sequence. This provides 1024 active scan lines each field, and eliminates interline flicker and line crawl that occurs with interlaced displays. It also provides good motion rendition and high resolution, without the need for adaptive processing in the receiver.

Progressive scan can also be provided without spot wobble, by scan-converting both the detail and the current field of 525 line information to 1125 line/60 frame progressive format and adding them together.

Achievable Resolution

The NYIT compatible HDTV transmission system can derive its signals from either an 1125-line interlaced camera, or from a recording, and can be displayed on an 1125-line interlaced monitor. Scan-conversion from these inputs can be done by replacing the storage on the face of the detail camera tube with electrical frame stores. Interlaced scanning of the camera and display, however, result in limiting resolution of about 700 TV lines, both vertically and horizontally.

Using a progressively scanned detail camera combined with a progressively scanned display as described above, the limiting resolution that can be achieved with the pixel format shown in Figure 2 is 920 lines, both vertically and horizontally.

Conclusion

In this paper many of the questions that arise in the design of a compatible HDTV transmission system have been addressed. The system has been designed in such a way that it is not only compatible with NTSC transmission, but also compatible with 1125-line source material and displays. Compatibility of the 3x4 and 3x5 aspect ratios is possible. The system has also been configured to take advantage of the improvements that can be achieved using progressively scanned cameras and displays.

While much work remains in order to completely implement this compatible HDTV transmission system, most of the critical questions have now been resolved.

References

1. Glenn, W.E., Glenn, K.G., Marcinka, J.W., Dhein, R.U., Abrahams, I.C. **Reduced Bandwidth Requirements for Compatible High Definition Television Transmission.** Proceedings 38th Annual Broadcast Engineering Conference, National Association of Broadcasters, Las Vegas, 297-305 (1984).

2. Glenn, W.E. **Compatible Terrestrial HDTV Transmission.** Proceedings 40th Annual Broadcast Engineering Conference, National Association of Broadcasters, Dallas (1986).

HDTV Compatible Transmission System

By William E. Glenn and Karen G. Glenn

Psychophysical measurements of vision have been used to design a compatible HDTV transmission system. A standard 525-line NTSC transmission is combined with a detail transmission in an additional half-channel of bandwidth to recreate an 1125-line HDTV image. The concept also makes possible the construction of a bichannel HDTV camera that uses progressive scanning of the high-resolution information at modest bandwidths. This camera has been demonstrated with both a standard 525-line NTSC output and an 1125-line HDTV output.

Most viewers of 1125-line high-definition television (HDTV) agree that the pictures show remarkable improvement in clarity and expanded field-of-view over those displayed by the present NTSC 525-line standard television. This technical improvement is analogous to that of color over monochromatic television. Both have achieved a far greater realism than had heretofore been possible.

There have been two major impediments to the introduction of HDTV for the general consumer. First, it has required excessive spectrum bandwidth, and second, HDTV has been incompatible with existing broadcasting systems.

Fortunately, the first of these impediments has been largely overcome. Recent work in Japan, at Japan Broadcasting Corp. (NHK), and in the U.S., at the New York Institute of Technology (NYIT), has demonstrated bandwidth-compression schemes for HDTV that reduce the needed bandwidth from the original 30 MHz to about 8 MHz.[1-3]

It is the second issue, that of compatibility with existing broadcast systems, that has played an important role in the design of the HDTV system at NYIT. Any new television system that is proposed for consumer use must be compatible. Economic reality dictates that no broadcaster will risk losing an audience of conventional TV viewers by replacing present broadcast equipment with HDTV broadcast equipment when there is no sizable audience of consumers who have purchased HDTV receivers. Similarly, no consumers will purchase HDTV receivers if no HDTV programs are being broadcast. In part, it is the chicken-and-egg problem — a mutual interdependence between broadcasters and receiver owners. This situation, combined with the relatively large economic investment involved in changing from the present system to a new one, has slowed the transfer of HDTV technology into the consumer domain.

The introduction of NTSC color provides a useful model for achieving compatibility between new and old systems. Color was introduced in such a way that viewers with monochrome receivers continued to receive an acceptable picture with no required modifications to their receivers. Those who chose to purchase color

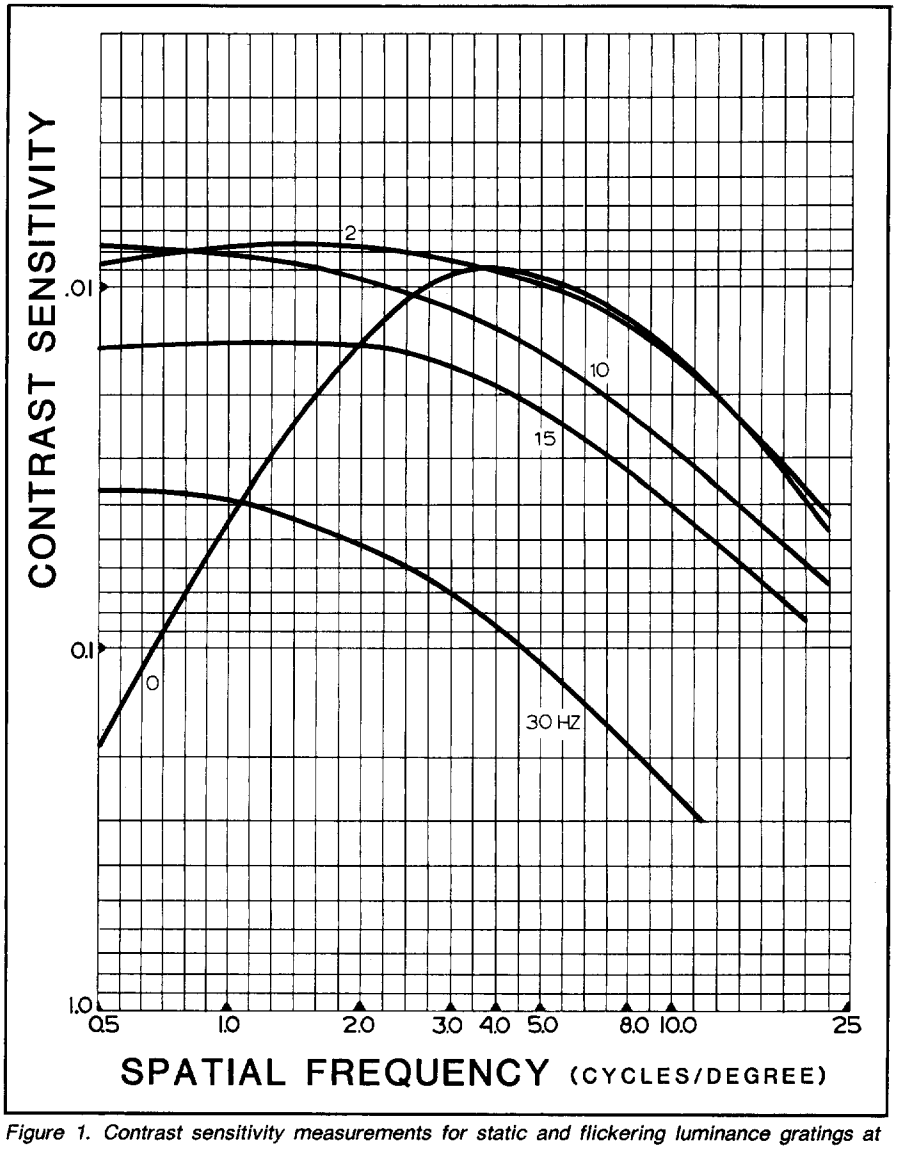

Figure 1. Contrast sensitivity measurements for static and flickering luminance gratings at various spatial and temporal frequencies (N = 1 observer).

Presented at the 128th SMPTE Technical Conference in New York (paper No. 128-107) on October 29, 1986. William E. Glenn, Ph.D., (who read the paper) and Karen G. Glenn, Ph.D., are affiliated with New York Institute of Technology, Dania, Fla. This article was received August 5, 1986. Copyright © 1987 by the Society of Motion Picture and Television Engineers, Inc.

receivers were able to take advantage of the advance in television technology and view many programs in color. The HDTV system at NYIT has been designed to accomplish this degree of compatibility with existing broadcast systems.

Although the question of compatibility between HDTV and existing broadcast systems must be resolved before HDTV can be widely available to the public, HDTV program material is currently being produced. Worldwide production standards have yet to be formally agreed on, but most producers use 1125-line cameras and recorders, 60-field interlaced recording, and 3:5 aspect ratio. Regardless of the production recording format, with appropriate scan conversion, the HDTV system of NYIT will accommodate 1125-line recordings, as well as any recording format that has adequate resolution.

For this system, we used an extensive study of the performance of the visual system to design the entire sequence—from image sensing through the final display. We begin here with a description of these properties of vision, then proceed with a discussion of their application to the various stages in the sequence, from the camera to the display.

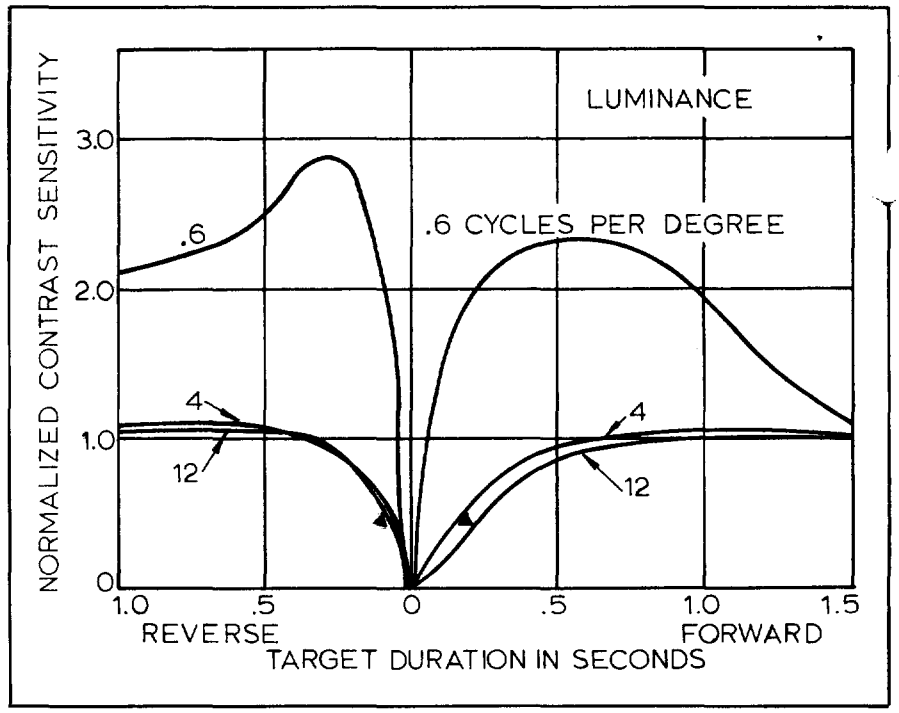

Figure 2. Mean normalized contrast sensitivity measurements for perception of luminance gratings of varying spatial frequency and exposure duration. Gratings appeared immediately before (reverse) or after (forward) a 0.1-sec masking stimulus (N = 7 observers). ▲ indicates reduction in sensitivity by a factor of 2, relative to unmarked conditions.

The Bichannel Visual System

There is now adequate evidence for the existence of at least two classes of visual channels, from the retina through the later stages of central visual processing in the brain.[4-10] The sustained visual channel is specialized for pattern detection and has high spatial, but poor temporal, resolution. This means that perception of fine detail is not immediate, but requires a period of at least 200-msec integration time.[6]

For perception of visual motion, the converse holds: the transient channel is specialized for motion detection and has high temporal, but poor spatial, resolution. Interlaced systems have taken advantage of this property of the visual system to eliminate flicker in video displays.

Figure 1, a plot of an observer's contrast sensitivity to stationary and flickering sinusoidal luminance gratings, depicts these well-known spatiotemporal characteristics of vision. For example, note that relative to perception of static gratings, the curve for sensitivity to a 10-Hz counterphase flickering grating shows an increased sensitivity at low spatial frequencies, but reduced sensitivity at high spatial frequencies.

Although current television engineering emphasis is on higher spatial definition, the visual system appears to have evolved with primary priority for transient channels that have high temporal (low spatial) resolution. Studies of visual masking, in which two patterns are presented in close temporal proximity, have shown that perception of detail in the slower pattern-detecting channels is masked by a stimulus in the more rapidly conducting motion-detecting channels.[5] A video example of masking is the impairment in perception of detail information that immediately follows a scene change.[11] This is a case of forward masking. Such motion-induced changes in luminance also degrade perception of events just prior to the change — backward masking.

We have studied effects of masking using a brief presentation of off-the-air TV as a mask.[12] Targets to be perceived were sine-wave gratings of varying spatial frequency and contrast. Targets occurred just before or just after the masking stimulus. Figure 2 shows results averaged across seven observers, with sensitivity normalized to each observer's nonmasked conditions. When the targets were mid-to-high spatial frequency luminance gratings, they were masked for significantly longer durations than when low-frequency (coarser) gratings were viewed. Relative to perception of unmasked gratings, perception of a masked grating was degraded a factor of two for about 200 msec when the mask preceded the grating, and 100 msec when it followed the grating. Thus, the extent to which one stimulus masks another depends on the spatial content of the target stimulus, with the perception of detail being more vulnerable to masking effects than the perception of low-resolution information.

For electronically produced images to appear realistic to the human visual system, a method for achieving good resolution in both spatial and temporal domains is needed. The present 60 field/sec rate of interlaced video signals is sufficient for good motion rendition of low-resolution information. We have proposed preserving this signal intact for transmission of the low-resolution portion of HDTV (Fig. 3). This proposal has a double advantage for HDTV: it will yield both good motion rendition and compatibility with existing broadcast systems.

The combination of long-duration masking effects and poor temporal response of sustained visual channels

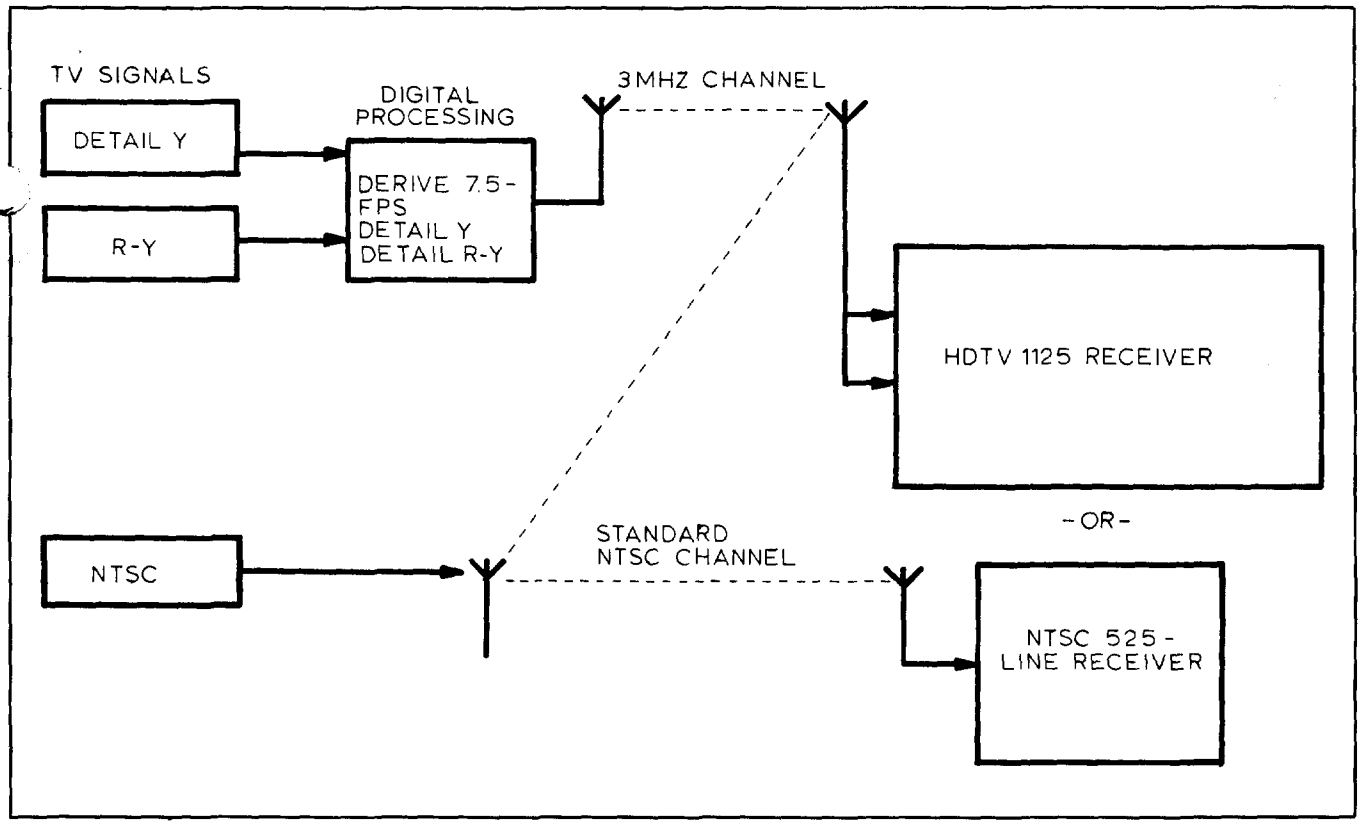

Figure 3. NYIT's proposed compatible HDTV system for terrestrial broadcast.

forms the basis for the proposal of a reduced frame rate for transmission of luminance detail and color detail information. This would require a second television channel. Detail information must be filtered temporally to eliminate frequencies near, or above, half the frame rate. This can be done by integrating the image on the face of a camera tube or by making a temporal low-pass filter using frame stores. With such filtering applied to detail information, it has been found experimentally that a frame rate of 7.5 frames/sec yields good motion rendition. This frame rate is consistent with that predicted by the psychophysical experiments described.

So far we have been concerned with spatial and temporal resolution requirements for luminance perception. Turning to color, we again found it worthwhile to consider human visual capabilities. Neural conduction in the visual system is generally slower along pathways that transmit color information than along those that transmit luminance information.[13] Psychophysical studies have shown that the rapidity with which color is discerned is roughly comparable to the slower speeds with which detailed patterns are resolved.[12]

Spatial resolution for purely chromatic variations is also lower than that of luminance. Limiting resolutions for perception of red-cyan (R-Y) and blue-green (B-Y) signals are about one-half and one-quarter, respectively, that of luminance (Y).[12] The B-Y signal has adequate resolution if derived from an NTSC signal. However, R-Y detail must be sent along with Y detail at a reduced frame rate to provide adequate R-Y resolution.

Like the MUSE system, the NYIT system achieves some of its bandwidth reduction by the use of diagonal sampling. This technique takes advantage of the oblique effect in vision. The human visual system is anisotropic with respect to perception of sharpness.[12-14] Diagonal sampling capitalizes on this perceptual asymmetry to reduce the required number of pixels for transmission of detail information.[12,15,16]

Offsetting pixels by a half-clock interval on adjacent lines yields a diagonal sampling pattern. This pattern reorients the axes of sharpest resolution in the image from diagonal to horizontal/vertical, corresponding to the orientation of sharpest acuity of the visual system. Therefore, for the same number of pixels, resolution is increased or, for a given resolution, fewer pixels are required.

HDTV Bichannel Progressively Scanned Camera

The previously described properties of the visual system have been applied to the design of a new HDTV camera. The camera is divided into two channels that match the performance of the two-channel visual system. Low-resolution luminance and color are derived from a standard 525-line *RGB* camera, scanning at 60 fields interlaced. This standard 525-line image provides the information for the low-resolution motion-detecting, or transient, visual channel.

In addition, a single high-definition camera tube is progressively scanned at 15 frames/sec to provide the luminance detail information. This signal is processed to derive the high-definition detail information. It supplies the information to the slower high-resolution pattern-detecting, or sustained, channel in the visual system.

The use of progressive scanning significantly improves the vertical resolution of both the HDTV image and NTSC image. The use of 15 frames/sec for the scan rate increases the sensitivity, greatly reduces the bandwidth, and improves the signal-to-noise ratio compared with cameras using 60 frames/sec scanning. Since

luminance detail is derived from a single tube, the registration requirements of the camera are greatly reduced compared with those of a three-tube HDTV camera.

A camera of this design with an *RGB* 525-line output and a detail high-definition output has been constructed.[17] The *RGB* camera was a standard Sony model BVP-3 camera. The high-definition detail camera used a vidicon that was progressively scanned at 15 frames/sec, giving 1050 scan lines. From this camera tube 1024 active lines were derived — 11 lines short of the 1035 active lines in the 1125-line format.

Signals from this bichannel camera are processed as illustrated in the block diagram in Fig. 4. High-resolution detail information is derived by spatial filtering with a digital matrix. The digital processing uses diagonal sampling for all image signals. This provides 1024 samples vertically and 2048 samples horizontally. The information is stored and scan-converted to the 1125-line interlaced format. The 525-line *RGB* signals are delayed, then scan-converted to 1125-line format. The 1125-line detail luminance and *RGB* signals are simply added together to produce the higher-resolution *RGB* signals for the 1125-line display. The 525-line image was displayed with 3:4 aspect ratio, and the 1125-line image was displayed with a 3:5 aspect ratio.

In an NAB demonstration, aspect ratios were made compatible simply by overscanning the width 10% on the NTSC monitor and the height 10% on the HDTV monitor.

The proposed HDTV transmission system will allow the video to invade

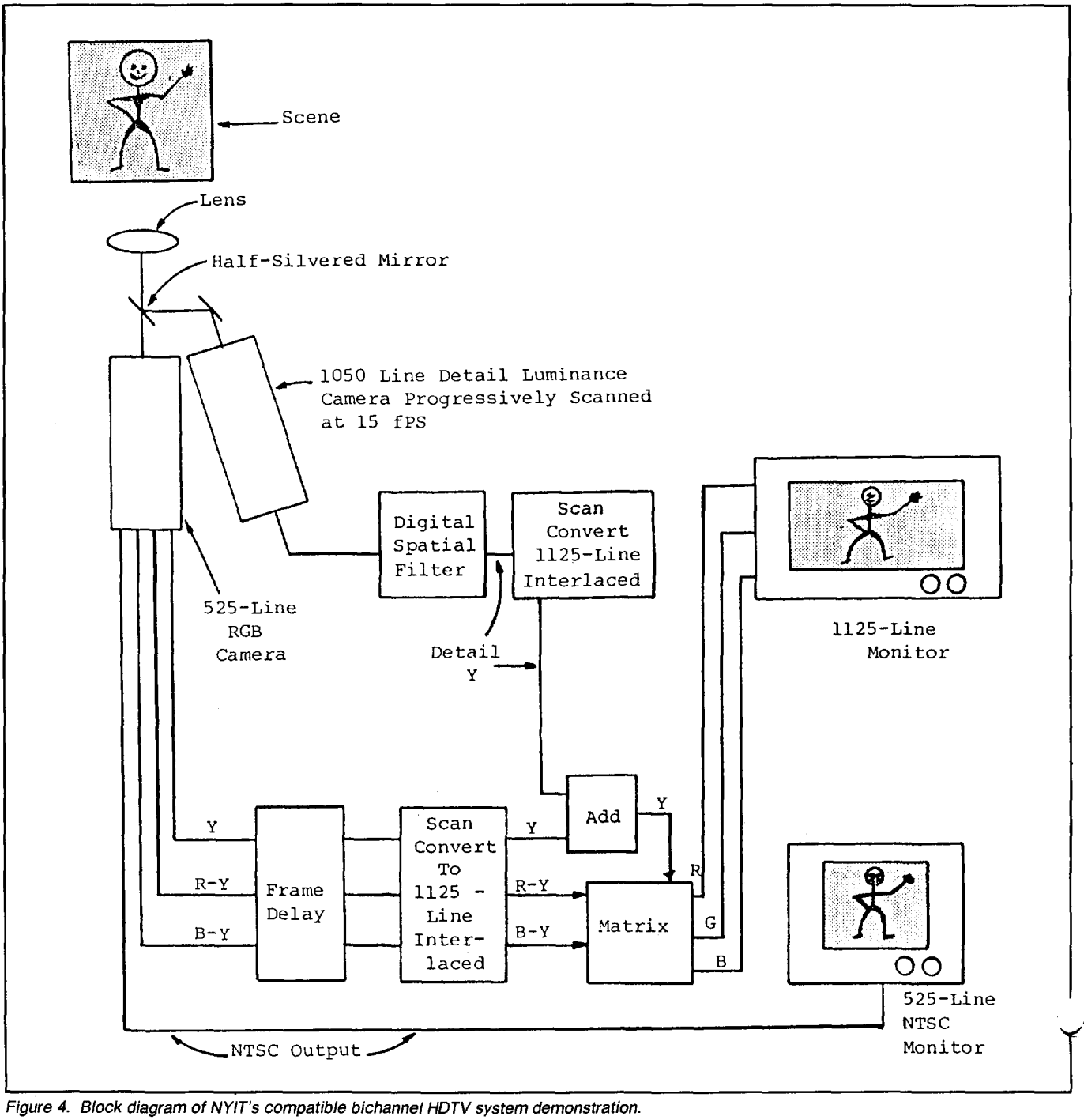

Figure 4. Block diagram of NYIT's compatible bichannel HDTV system demonstration.

the horizontal blanking interval of the NTSC signal by 4 μsec. An unmodified NTSC receiver will crop 10% of the excess video width to display its 3:4 aspect ratio. For the HDTV image, only 90% of the height of the NTSC image will be used for scan conversion to the 1125-line format. Therefore, the HDTV display will crop 10% of the height of the NTSC signal and use 10% more of its width, giving it a 3:5 aspect ratio. The HDTV detail signal will be transmitted with a 3:5 aspect ratio, since it is only used by HDTV receivers.

At the 1986 NAB Convention, this camera and associated digital signal processing were demonstrated. We shot a display that included objects moving at a wide variety of velocities. No motion artifacts were observed.

Recording

The output to the monitor from the camera and signal processing described was in the standard 1125-line format. It could, consequently, be recorded on a standard 1125-line HDTV recorder.

Alternatively, the 525-line signals could be recorded in the usual format with an additional track of comparable bandwidth that contains the detail information. This format would use considerably less tape than that used by a standard HDTV recorder.

Terrestrial Bichannel Transmission System

Figure 3 shows a block diagram of the proposed compatible transmission system. In this system, two channels are needed: one a standard NTSC (6 MHz), the second a narrowband (3 MHz) for broadcast of detail high-resolution information.

Narrowband transmission of detail information is made possible by lowering the frame rate to 7.5 frames/sec. This design matches the two-channel human visual system.[18]

The proposed system takes advantage of the visual system's long time constants for color and for detail luminance perception by preprocessing the chrominance and high-resolution luminance information in the NTSC transmission so that it is integrated over $^1/_{15}$ sec. This allows both an improved NTSC receiver and the HDTV receiver to use a frame-comb filter to eliminate cross-color and cross-luminance. If the $^1/_{15}$-sec integration were not used, artifacts would occur in moving portions of the image with frame combing.

The resolution of the NTSC *R-Y* signal is inadequate for an HDTV color image.[12] To achieve better *R-Y* resolution, an additional detail *R-Y* signal is transmitted at reduced frame rates, in the same way as was proposed for the detail luminance (*Y*) signal. Both detail *Y* and detail *R-Y* are transmitted together in the detail channel.

It is anticipated that an existing broadcast station can upgrade to HDTV by transmitting detail luminance and detail *R-Y* on a portion of an ultrahigh-frequency (UHF) channel. NTSC receivers will still show the image as before, but with somewhat improved quality because of the higher-resolution camera and improved signal processing used in originating the signal. HDTV sets will receive both the NTSC transmission and the detail transmission to reconstruct an HDTV image. If an HDTV receiver is tuned to an NTSC transmission without a detail transmission, it will simply display the 525-line image scan-converted to HDTV format. In this way the HDTV receiver is reverse compatible and does not have to change its processing to display an improved NTSC image.

For terrestrial broadcast, a single UHF channel could be time-shared by two existing broadcast channels to upgrade both stations compatibly to HDTV. This spectrum need not be adjacent in either frequency or location to the existing broadcast channel.

The detail transmission has its own synchronizing signals. The detail signal is loaded into a frame store in the receiver. It is clocked out in synchrony with the NTSC scan-converted signal. Consequently, transmission path differences between the detail and NTSC signals do not result in misregistration in the image.

For satellite, cable, or prerecorded video, the 3-MHz detail information would probably be adjacent to the NTSC spectrum.

Conclusion

A compatible HDTV transmission system has been designed that depends heavily on data derived from psychophysical measurements of vision. These principles have also been used to construct an HDTV camera that combines the advantages of progressive scanning of a high-resolution tube for deriving detail with a standard 525-line interlaced color camera. This system also maintains compatibility with the 1125-line interlaced format now used for HDTV program production by appropriate scan conversion. Experimental results, to date, support the contention that a transmission system can be produced that will provide a mechanism for compatible upgrading of broadcast equipment and consumer receivers to HDTV.

References

1. M. Sugimoto, "A Single Channel HDTV Broadcast System," *NHK Technical Report*, presented to HDTV Subcommittee of SMPTE, Montreal, Que., Canada, 1984.
2. W. E. Glenn et al., "Compatible Transmission of High-Definition Television Using Bandwidth Reduction," *Proc. 37th Annual Broadcast Engineering Conference*, National Association of Broadcasters, Las Vegas, 341-349, 1983.
3. W. E. Glenn et al., "Reduced Bandwidth Requirements for Compatible High-Definition Television Transmission," *Proc. 38th Annual Broadcast Engineering Conference*, National Association of Broadcasters, Las Vegas, 297-305, 1984.
4. C. Blakemore and F. W. Campbell, "On the Existence of Neurons in the Human Visual System Selectively Sensitive to the Orientation and Size of Retinal Images," *J. Physiol.*, *203*:237-260, 1969.
5. B. Breitmeyer and L. Ganz, "Implications of Sustained and Transient Channels for Theories of Visual Pattern Masking, Saccadic Suppression, and Information Processing," *Psychol. Rev.*, *83*:1-36, 1976.
6. B. Breitmeyer and L. Ganz, "Temporal Studies with Flashed Gratings: Inferences about Human Transient and Sustained Channels," *Vision Res.*, *17*:861-865, 1977.
7. P. Lennie, "Parallel Visual Pathways: A Review," *Vision Res.*, *20*:561-594, 1980.
8. D. J. Tolhurst, "Sustained and Transient Channels in Human Vision," *Vision Res.*, *15*:1151-1155, 1975.
9. U. Keesey, "Flicker and Pattern Detection: A Comparison of Thresholds," *J. Op. Soc. Am.*, *62*:446-448, 1972.
10. J. J. Kulikowski and D. J. Tolhurst, "Psychophysical Evidence for Sustained and Transient Detectors in Human Vision," *J. Physiol.*, *232*:149-162, 1973.
11. A. J. Seyler and Z. L. Budrikis, "Detail Perception after Scene Changes in Television Image Presentation," *IEEE Transactions on Information Theory*, 31-43, 1965.
12. W. E. Glenn, K. G. Glenn, and C. J. Bastian, "Imaging System Design Based on Psychophysical Data," *Proc. of Society of Information Display*, *26*:71-78, 1985.
13. P. Lennie, "Recent Developments in the Physiology of Color Vision," *Trends in Neurosciences*, *7*:243-248, 1984.
14. S. Appelle, "Perception and Discrimination as a Function of Stimulus Orientation: The Oblique Effect in Man and Animals," *Psychol. Bull.*, *78*:266-278, 1972.
15. B. Wendland, "Extended Definition Television with High Picture Quality," *SMPTE J.*, *92*:1028-1035, Oct. 1983.
16. B. Wendland and H. Schroeder, "On Picture Quality of Some Signal Processing Techniques," *SMPTE J.*, *93*:915-922, Oct. 1984.
17. W. E. Glenn, J. W. Marcinka, and K. G. Glenn, "Experimental Camera and Recording System for Reduced Bandwidth HDTV Studio Production," *Proc. 39th Annual Broadcast Engineering Conference*, National Association of Broadcasters, Las Vegas, 523-527, 1985.
18. W. E. Glenn, "Compatible Terrestrial HDTV Transmission," *Proc. 40th Annual Broadcast Engineering Conference*, National Association of Broadcasters, Dallas, 271-274, 1986.

IMAGING SYSTEM DESIGN BASED ON PSYCHOPHYSICAL DATA

W. E. Glenn, K. G. Glenn, and C. J. Bastian
New York Institute of Technology
Science & Technology Research Center
Dania, FL

I. INTRODUCTION

The transmission and display of images has been based on scanning principles established about 40 years ago. The results of recent studies of the detailed properties of the visual system can be used to match the properties of a transmission and display system more closely to the visual process. Many parameters needed in system design have been quantified by psychophysical measurements reported in the vision literature. However, frequently pertinent data were either not available or were measured using parameters that could not be easily used for imaging system design. In these cases we have conducted the necessary psychophysical experiments, which will be described.

We will focus on three issues that arise in design of image display systems:

1. What is the optimal relative resolution for display of static and temporally varying luminance and chrominance information?
2. What is the best direction for sampling of pixels to display an image?
3. What are the best frame rates for different spatial frequencies when presenting a sequence of static images to depict motion?

II. STATIC MODULATION TRANSFER FUNCTIONS (MTF)

Performance of the human visual system can be quantified by psychophysical measurements that answer the question, "What is the minimum contrast needed for an individual to differentiate a grating pattern from a homogeneous field of the same space-luminance average?" In the laboratory, patterns to be detected have often been sine-wave luminance gratings of varying spatial frequencies. A similar question can be asked using gratings of complementary colors in which luminance has been held constant. These are referred to as isoluminance chromaticity gratings. In this case, the measurement reflects the amount of color (saturation) needed for an individual to differentiate the grating pattern from a homogeneous gray background of the same space-average luminance. Earlier studies have addressed similar questions, but with luminance levels and fields of view that a much less than these of current television monitors (, 1958; van der Horst and Bouman, 1969). Kelly and his colleagues have published extensive data on detection of both luminance and isoluminance chromaticity (red-green) sine-wave gratings (Kelly and Van Norren, 1977; Kelly, 1981). This work done with red-green color pairs chosen to average a saturated yellow which make his findings difficult to apply to color television.

We have repeated many of the measurements of modulation thresholds for luminance and isoluminance chromaticity gratings using parameters that were more suited to design of a high-definition television imaging system. We have measured thresholds over the spatial frequency range for television viewing values and have used gratings of complementary color pairs that average to illuminant "C" white rather than a saturated yellow. These measurements were also made using a luminance and field of view that is appropriate for normal television viewing conditions. These measurements provide data that is directly applicable to monochrome and color television.

We used the "method of adjustment" (Kling and Riggs, 1971) to obtain modulation thresholds in all of the studies to be described. An observer adjusted the contrast of luminance sine-wave gratings of varying spatial frequencies displayed on a television screen. For isoluminance chromaticity gratings, the saturation of the color bars was adjusted. Space-average luminance for both chromaticity and luminance gratings was 60 ftL. The display subtended 5.7° × 4.5° of visual angle. Ambient light level was held low and constant. During adjustments, the observer sat at a distance of 8 ft, and fixated a small black diamond in the center of the display. He/she alternately adjusted the display to increase the contrast (or saturation) until the grating was just barely visible, and to decrease it until it was no longer visible. These adjustments produced voltage changes in the amplitude of a video signal recorded by an experimenter.

The modulation threshold value is derived from a control voltage which determines the contrast of the displayed grating. By plotting the measured system contrast at known voltage readings, a line equation was derived. This permitted calculation of modulation thresholds from voltage settings.*

Figure 1 shows modulation transfer functions averaged over seven subjects. The curve labeled "Y" depicts sensitivity for static luminance gratings. For this condition, the peak sensitivity of the human visual system is about 4–5 cycles/degree and decreases at both lower and higher spatial frequencies.

Preliminary testing with various color pairs passing through illuminant "C" white on the CIE diagram showed that the maximum perceptible color resolution was for red-

0734-1768/85/2601-0071$1.00 © 1985 SID

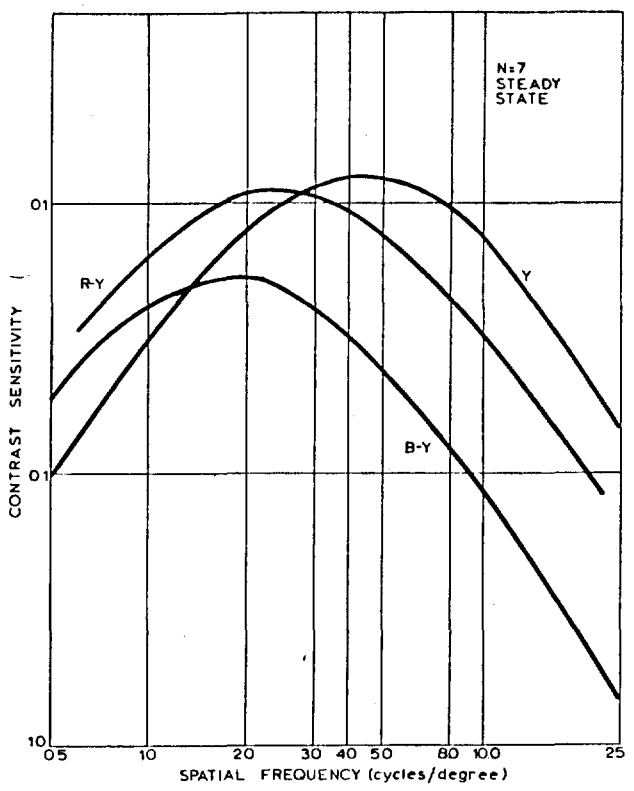

FIG. 1. Modulation transfer functions for static luminance gratings (Y) and isoluminance chromaticity gratings (R − Y, B − Y) averaged over seven observers.

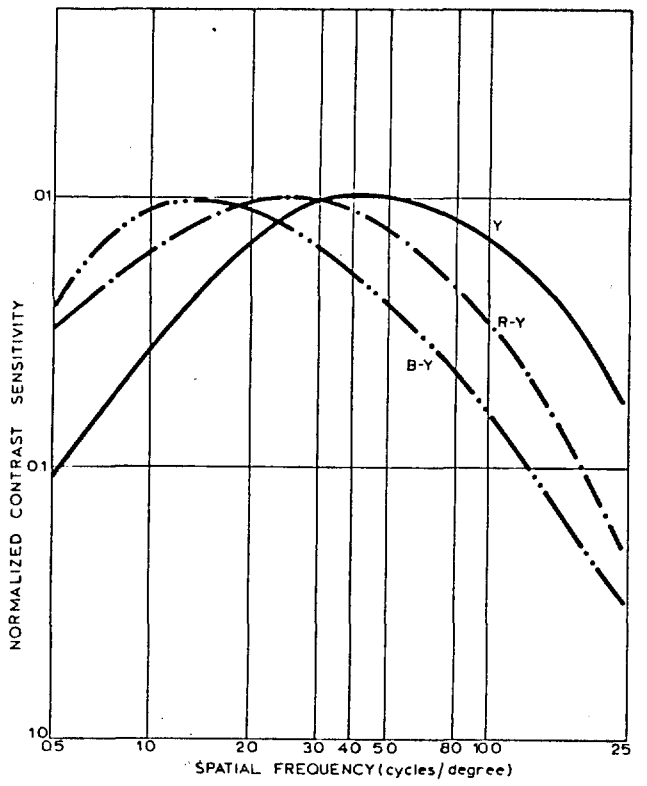

FIG. 2. Normalized moduluation transfer functions derived from data depicted in Fig. 1.

cyan gratings (labelled R-Y, Fig. 1), and the minimum resolution for blue-yellow gratings (labelled B-Y, Fig. 1). These results verify the proportions and maximum and minimum color coordinates recommended by NHK (Fugio, Ishida, Komoto and Nishizawa, 1980) based on a similar study by Sakata and Isono (1973).

As with luminance gratings, sensitivity to stationary gratings composed of these color pairs decreases at both high and low spatial frequencies. However, in color, the peak sensitivity is for gratings of lower spatial frequencies than is the case in luminance.

III. RELATIVE LUMINANCE AND CHROMINANCE RESOLUTION

The NTSC color television system design was based on the fact that the visual system has better resolution in luminance than in color. Because of the limitations of bandwidth and compatibility, there were significant compromises in the resolution allocated to color. With inadequate color resolution, the choice of the chromaticity of the high- and low-resolution color signals was related more to the need to depict flesh tones accurately at edges rather than to match the performance of the visual system. The bandwidth reduction techniques described later in this paper should eliminate the need for these compromises. With adequate color resolution we need to determine the proper proportions for allocating luminance and color information.

In Fig. 2, the curves of Fig. 1 have been normalized with each peak set to 0.01 so that the different absolute sensitivities of the human visual system to the luminance and two chromaticity gratings are not apparent. To estimate relative limiting resolutions we compared the high spatial frequencies of these three curves at 30% of peak response. The R-Y resolution (10 cycles/degree) was about one-half that of Y (20 cycles/degree), and the B-Y resolution (5 cycles/degree) about one-quarter that of Y. If an imaging system were designed without the need for color-resolution compromises, the color difference signals would have resolutions in about three proportions with respect to Y. Although these measurements were made on only seven observers, statistical analyses showed these comparisons to be significant at probability levels from <0.01 through 0.016, indicating that these data reflect real effects that may be safely generalized to the general population of TV viewers with normal vision.

IV. IMAGE SAMPLING

A television image is normally sampled in the vertical direction by the scan lines. The increased use of digital stores has also resulted in horizontal sampling of the image.

The idea of "offset" or diagonal sampling has often been proposed (Wendland, 1983) and a CCD camera chip using this type of sampling has been developed (Murata, 1983). Diagonal sampling has almost always been used in black and white halftone screens in printing. If the same number of pixels is sampled cardinally as diagonally, the information content of the image remains the same. Diagonal sampling would thus appear to offer no particular advantage for image resolution, were it not for the

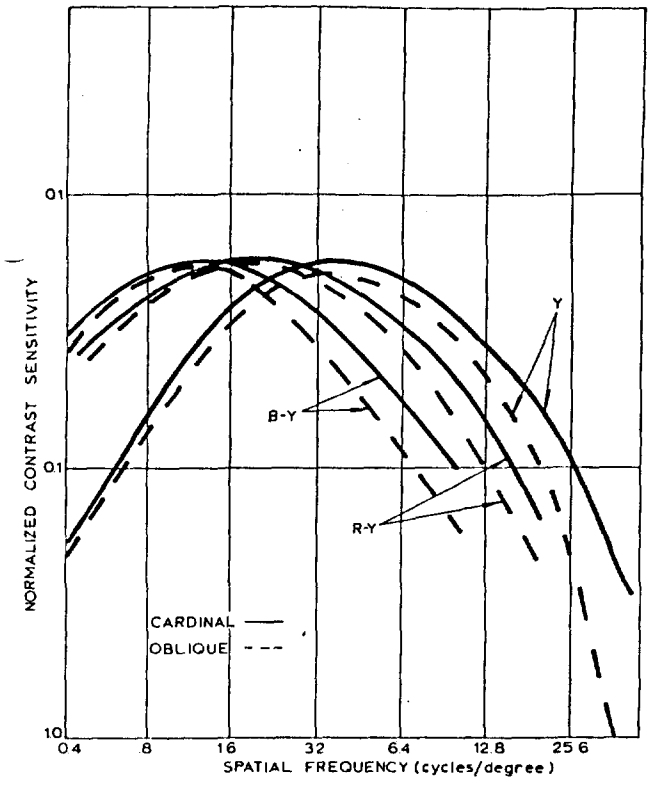

FIG. 3. Normalized modulation transfer functions for luminance (Y) and isoluminance chromaticity gratings (R-Y, B-Y) oriented in different directions. Curves labelled "cardinal" depict average sensitivity for gratings of 90 and 180 degrees; those labelled "oblique" for gratings of 45 and 135 degrees. Data are averaged over eight observers.

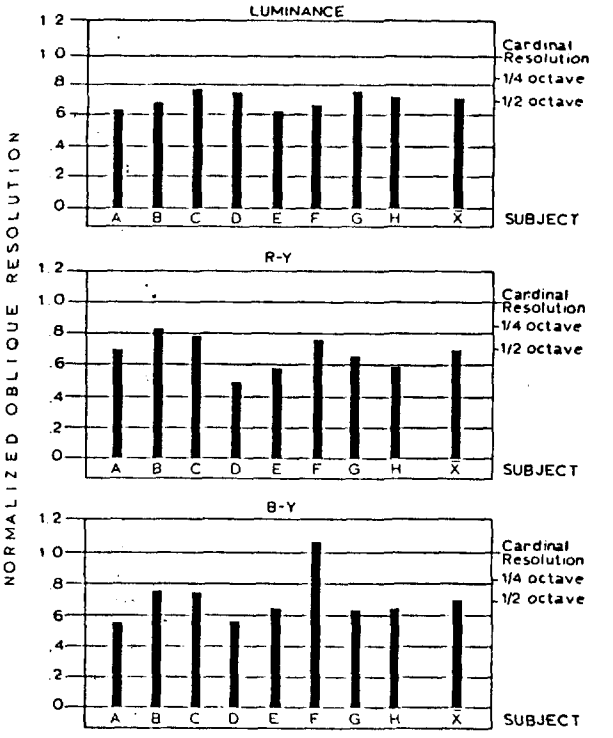

FIG. 4. Oblique resolution relative to cardinal resolution for each of eight observers (A-H) and group mean ($\bar{X}$) for luminance, and for isoluminance chromaticity (R-Y, B-Y) gratings.

"oblique effect." This well-documented visual effect refers to the reduction in perceptibility of patterns that are oriented obliquely (at 45 or 135 degrees) relative to those that are horizontally or vertically oriented (Appelle, 1972).

The sources of the oblique effect are both optical (lens/cornea) and neurophysiological. When the optical source has been ruled out by correcting viewers for optical astigmatism, the remaining poorer resolution of diagonal than cardinal gratings has been attributed to neurophysiological mechanisms. Experiments that bypass the optics of the eye by using a laser to form interference fringes directly on the retina have also demonstrated an "oblique effect." This finding suggests an orientational inequality in the visual nervous system (Campbell, Kulikowski and Levinson, 1966).

Our work on this phenomenon has focused on measuring modulation transfer functions of individual observers using sine-wave luminance and isoluminance chromaticity gratings that were oriented in both cardinal (90, 180 degrees) and both diagonal (45, 135 degrees) directions. Using the procedures described under "Static Modulation Transfer Functions," we have measured modulation thresholds across a wide range of spatial frequencies: 0.6 through 36 cycles/degree. Figure 3 shows averaged modulation transfer functions for cardinally and obliquely oriented gratings. The curves reflect the mean sensitivity based on eight observers. For high spatial frequencies, the anisotropy observed represents about 1/2 octave, i.e., $\sqrt{2}$, reduction in resolution at the same sensitivity modulation of both obliquely oriented luminance and chromaticity gratings relative to cardinally oriented gratings.

For each observer an "anisotropy index" was calculated that normalized his modulation thresholds for obliquely oriented gratings relative to his thresholds for cardinally oriented gratings. Figure 4 shows the anisotropy indices for individuals A through H, plus the mean index for Y (luminance), R-Y, and B-Y (chromaticity) gratings. All of these subjects had normal or "corrected-to-normal" vision. However, as current optometric practice is to correct astigmatism only to the nearest 0.25 diopter, it is likely that the observers had some residual (uncorrected) astigmatism. The most common form of astigmatism produces superior resolution for either vertically or horizontally oriented stripes, thus less-than-perfect correction for either defect would increase the magnitude of the observed oblique effect.

We can use the oblique effect to reduce the number of pixels in the image. The result of using diagonal sampling with one-half the number of pixels is diagrammed in Fig. 5. This figure shows a polar plot of the resolution of the visual system at 30% of its peak sensitivity. Superimposed is a plot of a normal television display using 480 × 680 pixels and a Kell factor loss of 0.7. Also shown is the plot of a display using 480 × 340 pixels with diagonal sampling and a Kell factor of 0.8 by using appropriate processing. Pre- and post-filtering as reported by Wendland and Schroeder (1984) have achieved Kell factors in excess of 0.8. Since the visual system still has some response on the diagonal above 30% response, there is some loss in

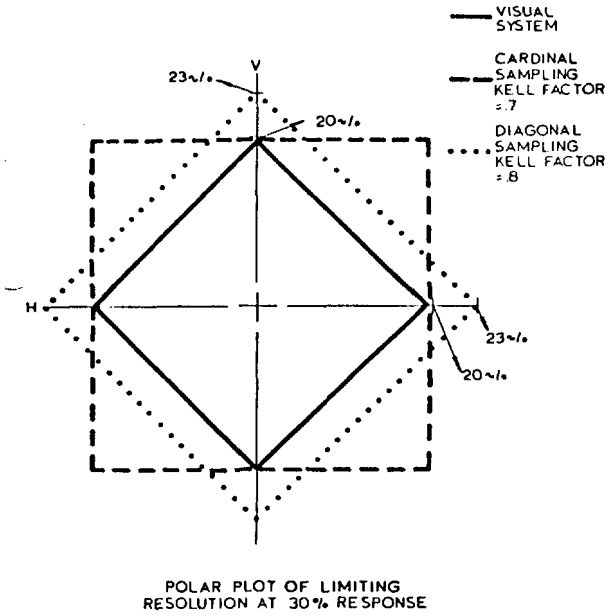

FIG. 5. Polar plot in cycles/degree of limiting horizontal (H) and vertical (V) resolution of the visual system. Also diagrammed is the effect on apparent resolution of cardinal compared with diagonal sampling of a displayed image.

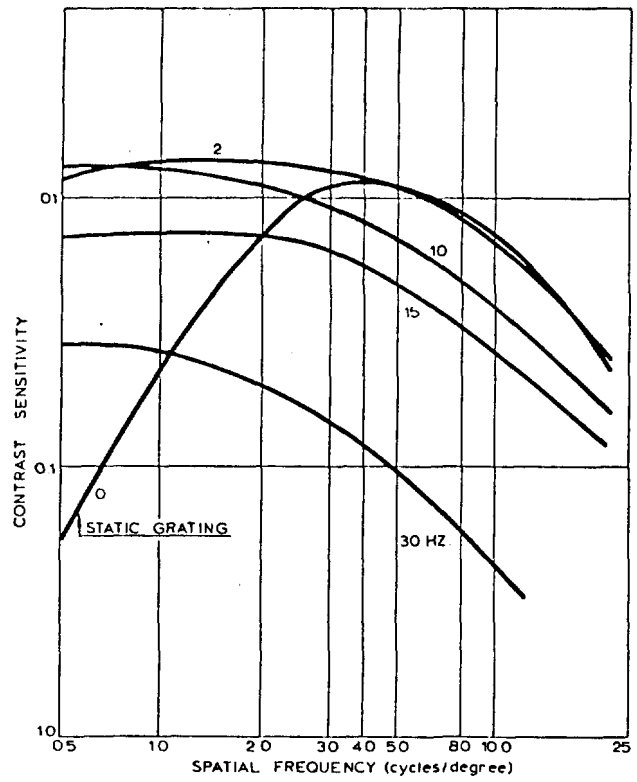

FIG. 6. Contrast sensitivity as a function of spatial frequency (cycles/degree) for luminance gratings flickered in counter-phase alternation at different temporal frequencies (Hz).

sharpness if the number of pixels is reduced a factor of 2 using diagonal sampling. The loss, however, at normal viewing distance can be offset by improvement in the Kell factor loss using appropriate camera tube scanning and processing. As a practical matter, by using progressive scanning of the camera tube, as well as proper choice of the spot size in the display, a system will have adequate pre- and post-filtering to produce a Kell factor above 0.8 with a minimum of aliasing. This twofold reduction in information content can save transmission bandwidth, digital storage capacity, and total number of pixels in matrixed storage sensors or displays.

V. FRAME RATES FOR DIFFERENT SPATIAL FREQUENCIES

It has long been observed that a sequence or static images simulates motion rather well. In film and in current television practice, a frame rate is chosen and all spatial frequencies in the image are updated at the same frame rate. We have proposed (Glenn et al., 1983, 1984) that high spatial frequency information be updated at lower frame rates than low spatial frequency information. This change would provide a better match between temporal parameters of the imaging system and spatiotemporal characteristics of the visual system.

There is a wealth of both psychophysical and neurophysiological data that supports the idea of two separate visual channels with varying sensitivities to changes in the spatial and temporal domains (Enroth-Cugell and Robson, 1966; Kulikowski and Tolhurst, 1973; Breitmeyer and Ganz, 1976; Lennie, 1980). The "sustained" (pattern-detecting) channel in the visual system has high spatial resolution, but a very slow response time. This means that preception of high spatial frequency information or detail is not instantaneous. Rather, it requires about 300 msec to "build up" under ideal conditions. Therefore, a slower frame rate (e.g., 5 rather than 30 frames/sec) is adequate for high spatial frequency information.

Conversely, the "transient" visual channels which are specialized for detection of motion have high temporal frequency sensitivity but poor spatial resolution. For this reason low spatial frequency information must be sent at a higher frame rate than detailed information in order to depict motion adequately. The 60-field/sec field rate used in television is adequate for depicting motion at low spatial frequencies.

We will present three lines of evidence in support of these suggestions:

(1) Temporally varying MTFs.
(2) MTFs for briefly flashed gratings.
(3) Masking effects.

VI. TEMPORALLY VARYING MODULATION TRANSFER FUNCTIONS

Work in both Kelly's and the authors' laboratories have addressed the question of how temporal modulation of the same grating patterns affects their perceptibility. We have flickered gratings in counterphase alternation at varying rates. Figure 6 shows the results for perceptibility of luminance gratings flickering at 2, 10, 15, and 30 Hz for a typical subject. Clearly, perceptibility is enhanced dramatically by flicker at rates between 2 through 10 Hz, for gratings below a spatial frequency of 3 cycles/degree,

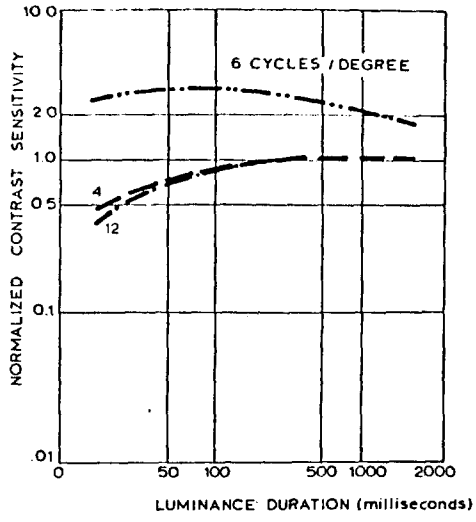

FIG. 7(a). Normalized contrast sensitivity briefly presented luminance gratings of 0.6, 4, and 12 cycles/degree as a function of duration of presentation. Data averaged over seven observers.

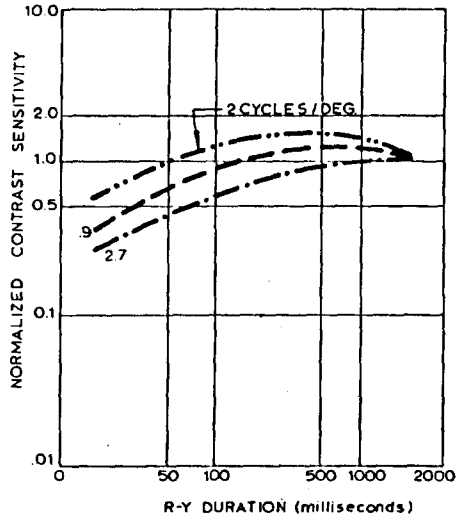

FIG. 7(b). Normalized contrast sensitivity of briefly presented chromaticity gratings (R-Y) of 0.2, 0.9, and 2.7 cycles/degree as a function of duration of presentation. Data averaged over seven observers.

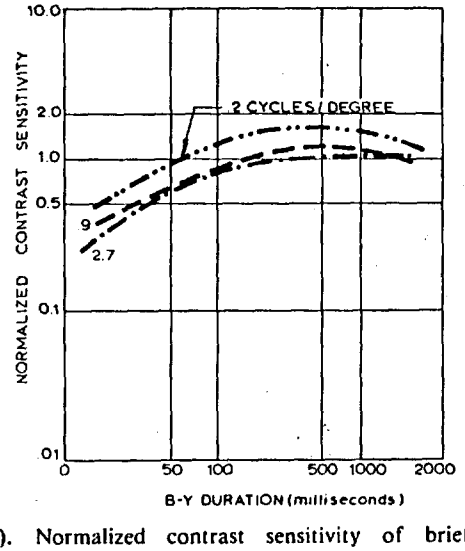

FIG. 7(c). Normalized contrast sensitivity of briefly presented chromaticity gratings (B-Y) of 0.2, 0.9, and 2.7 cycles/degree as a function of duration of presentation. Data averaged over seven observers.

relative to perceptibility of the same static gratings. As the rate of flicker increases, perceptibility of high spatial frequencies is degraded, whereas that of low spatial frequencies is still relatively better than that for static grating patterns.

Figure 6 demonstrates nicely the tradeoff between temporal and spatial frequencies in the visual system. These data suggest that the transient (motion-detecting) system is activated by spatial frequencies below 3 cycles/degree, whereas above this frequency the "sustained" (pattern-detecting) system becomes activated. Similar experiments on temporal modulation of isoluminance chromaticity gratings are currently in progress.

VII. MTFs FOR BRIEFLY FLASHED GRATINGS

We varied grating exposure duration from 17 to 2000 msec. This variable produced significant changes in perceptibility both for luminance and for chromaticity gratings ($p<0.0000$ and 0.0001, respectively). As in the steady-state condition, spatial frequency of the briefly flashed gratings was also a highly significant factor for both luminance and chromaticity gratings ($p<0.0000$, and 0.002, respectively). Figure 7 shows these effects averaged over seven observers for luminance [Fig. (7(a)] and chromaticity [Figs. (7(b) and 7(c)] gratings. Each observer's thresholds for briefly flashed gratings were normalized against his/her thresholds under "steady-state" conditions for the same gratings. A sensitivity equal to 1 reflects no difference between the steady-state and briefly flashed condition.

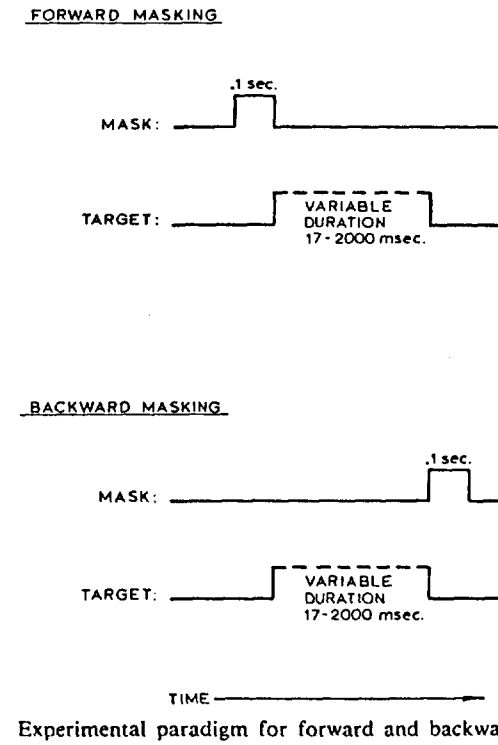

FIG. 8. Experimental paradigm for forward and backward masking. Targets were either luminance or isoluminance chromaticity sine-wave gratings of varying spatial frequencies and duration. Masks were off-the-air television images.

Figure 7(a) shows the marked differential effect of duration on gratings of low (0.6 cycles/degree) and high (4, 12 cycles/degree) spatial frequencies. Very brief duration presentations enhance perception of low-spatial-frequency gratings over the steady-state condition, probably reflecting the operation of transient channels in the visual system. Conversely, there is a suppression in sensitivity for brief presentations of gratings at higher spatial frequencies. Statistical evaluation of this interaction between spatial frequency and exposure duration yielded $p = 0.0001$.

For isoluminance chromaticity gratings [Figs. 7(b) and 7(c)], there was little or no enhancement for short-duration, low-spatial-frequency gratings (0.2 cycles/degree), as there was for luminance gratings. At spatial frequencies of 0.9 cycles/degree and above, there was a relative suppression in sensitivity for gratings presented at a duration of less than about 100 msec relative to the steady-state condition. The amount of suppression of sensitivity at high spatial frequencies in color is about the same as that seen in luminance.

VIII. MASKING EFFECTS

In a typical TV image, motion and scene changes impair perception of detail information. This is a result of a phenomenon termed "masking." This represents a reduction in perceptibility of a target stimulus produced by presentation of a second (masking) stimulus in close temporal proximity to the target stimulus. The explanation advanced for masking is that neural activity in the sustained visual channel is "pre-empted" by that in transient channels enroute to more central visual processing areas in the brain (Breitmeyer and Ganz, 1976). An abrupt change in the scene caused by motion will mask perception of detail in a scene for about 250 msec.

Figure 8 diagrams the temporal relationships between two stimuli that we used to study masking. We used a 0.1-sec exposure of off-the-air TV as a mask, i.e., to interfere with perception of a sine-wave grating target presented either just before or just after the mask. The observer adjusted the grating contrast, or saturation in the case of color, until it was barely perceptible. When the TV image occurs prior to the sine-wave grating there is "forward masking"; when it follows presentation of the grating, "backward masking." Target duration varied from 17 to 2000 msec in steps of a factor of 2.

We found that perception of a brief flash of off-the-air TV strongly interfered with perceptibility of both luminance and chromaticity gratings [Figs. 9 (a)–(c)]. Curves have been normalized to 1.0 against each observer's "steady-state" condition. Luminance gratings of spatial frequencies at or above 4 cycles/degree were masked for longer durations than were the coarser gratings at 0.6 cycles/degree ($p < 0.0001$). The masking effect also speeded up when chromaticity gratings were viewed, although in this case perceptibility was not affected by the spatial frequency of the target grating ($p = 0.26$). The masking effects did not differ significantly for the red-cyan and blue-yellow color pairs ($p = 0.41$).

The observed reduction in perceptibility when the target was presented either just before or just following the masking stimulus is, in fact, a combined effect. It is due partly to the brief target duration, as well as to the target's temporal proximity to the mask. Comparisons of the unmasked duration curves shown in Figs. 7(a)–7(c), with the respective masking curves in Figs. 9(a)–9(c), give an idea of the magnitude of the "pure" masking effect. The "pure" masking component for a factor of 2 reduction in perceptibility corresponds to about 80 msec backward masking and about 150 msec forward masking for gratings of all spatial frequencies in both luminance and chromaticity.

If the viewer fixates a static portion of the image and a moving object causes a transient within the field of view, the masking effect prevents perception of detail for about 250 msec. This explains the results previously reported by Seyler and Budrikis (1965) in their study of the delay in the perception of detail after scene changes.

The present study suggests that for moving images while fixating, a frame rate of 5 frames/sec should be adequate for the detail luminance and detail color in stationary portions of an image. On the basis of these measurements, we have constructed a television system to display low-resolution information at 60 fields/sec interlaced with detail information displayed at 7.5 frames/sec (progressive scan). The result is a system that compares favorably in motion rendition with a standard television display.

The issue of apparent sharpness of an image moving slowly enough to be visually tracked is the subject of a separate experimental analysis to be reported in the future.

IX. CONCLUSIONS

Psychophysical measurements of the performance of the visual system can provide information for image system design that can reduce the information rate required for storage and transmission of moving images. Information that cannot be detected by the visual system can be removed before storage or transmission or display. The conclusions derived from our psychophysical measurements are:

1. Color difference signals should produce R-Y resolution one-half that of luminance and B-Y resolution one-quarter that of luminance.
2. Diagonal sampling with the appropriate spatial filtering at the camera and display can reduce the information required for a given apparent sharpness.
3. For depicting motion, frame rates of 60 fields/sec are preferable for spatial frequencies below 4 cycles/degree. For spatial frequencies above this, frame rates of 5–10 frames/sec are adequate with proper temporal filtering.

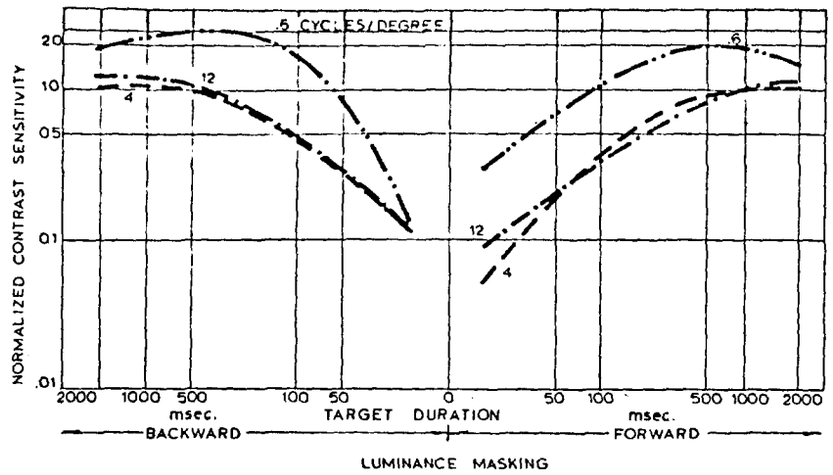

FIG. 9(a). Normalized contrast sensitivity for luminance gratings of 0.6, 4, and 12 cycles/degree as a function of duration of grating presentation. Gratings were presented immediately before a 0.1-sec mask (backward masking) or after it (forward masking).

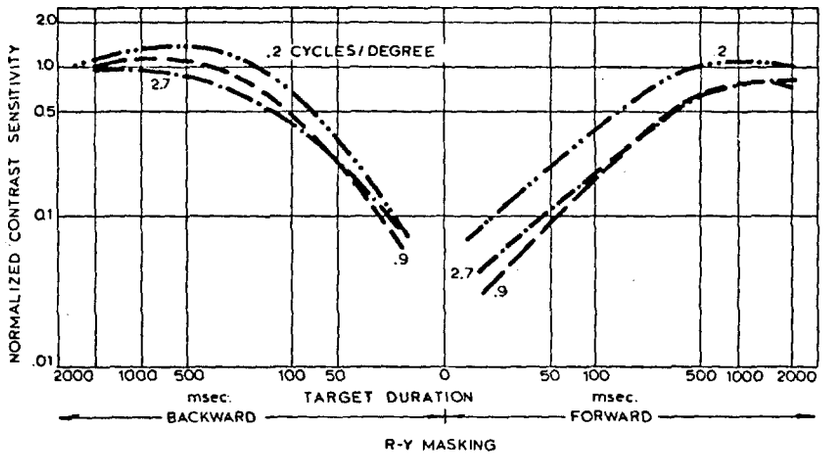

FIG. 9(b). Normalized contrast sensitivity for R-Y chromaticity gratings of 0.2, 0.9, and 2.7 cycles/degree as a function of duration of grating presentation. Gratings were presented immediately before a 0.1-sec mask (backward masking) or after it (forward masking).

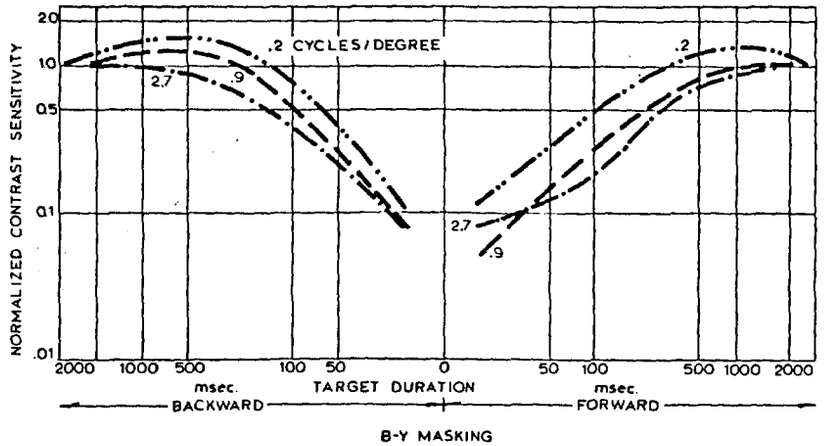

FIG. 9(c). Normalized contrast sensitivity for B-Y chromaticity gratings of 0.2, 0.9, and 2.7 cycles/degree as a function of duration of grating presentation. Gratings were presented immediately before a 0.1-sec mask (backward masking) or after it (forward masking).

•The calibration procedure involved obtaining photometer readings of adjacent maximum and minimum luminance within one cycle of a sine-wave grating for a wide range of voltage settings. At each spatial frequency, contrast was defined as:

$$\frac{\text{maximum} - \text{minimum luminance}}{\text{maximum} + \text{minimum luminance.}}$$

For chromaticity gratings contrast of each complementary color was measured separately. The other color was of equal contrast but positioned at its maximum brightness was superimposed over the minimum brightness of its complement in order to keep the luminance of the grating constant. The threshold contrast sensitivity of an isoluminance chromaticity grating is thus the equal but opposite contrast of the two complementary colors.

REFERENCES

[1] S. Appelle, "Perception and Discrimination as a Function of Stimulus Orientation: The Oblique Effect in Man and Animals," *Psychol. Bull.* **78**, pp. 266-278 (1972).

[2] B. G. Breitmeyer and L. Ganz, "Implications of Sustained and Transient Channels for Theories of Visual Pattern Masking, Saccadic Suppression and Information Processing," *Psychological Review* **83**, No. 1, pp. 1-36 (1976).

[3] F. W. Campbell, J. J. Kulikowski, and J. Levinson, "The Effect of Orientation on the Visual Resolution of Gratings," *J. Physiol.* **187**, pp. 427-436 (1966).

[4] C. Enroth-Cugell and J. G. Robson, "The Contrast Sensitivity of Retinal Ganglion Cells of the Cat," *J. Physiol.* **187**, pp. 517-552 (1966).

[5] T. Fugio, J. Ishida, T. Komoto, and T. Nishizawa, "High-Definition Television System—Signal Standard and Transmission," *SMPTE Journal* **89**, pp. 579-584 (1980).

[6] W. E. Glenn, K. G. Glenn, R. L. Dhein, and I. C. Abrahams, "Compatible Transmission of High Definition Television Using Bandwidth Reduction," *Proceedings of 37th Annual Broadcast Engineering Conference*, National Association of Broadcasters, Washington, D.C., pp. 341-349 (1983).

[7] W. E. Glenn, K. G. Glenn, J. Marcinka, R. Dhein, and I. C. Abrahams, "Reduced Bandwidth Requirements for Compatible High Definition Television Transmission," *Proceedings of 38th Annual Broadcast Engineering Conference*, National Association of Broadcasters, Washington, D.C., pp. 297-305 (1984).

[8] D. H. Kelly and D. van Norren, "Two-Band Model of Heterochronomatic Flicker," *J. Opt. Soc. Am.* **67**, pp. 1081-1091 (1977).

[9] D. H., Kelly, "Disappearance of Stabilized Chromatic Gratings," *Science*, **214**, pp. 1257-1258 (December 11, 1981).

[10] J. W. Kling and L. A. Riggs, (Eds.) *Woodworth and Schlosberg's Experimental Psychology*, 3rd Edition, Holt, Rinehart and Winston, New York, (1971).

[11] J. J. Kulikowski and D. J. Tolhurst, "Psychophysical Evidence for Sustained and Transient Receptors in Human Visions," *J. Physiol.* **232**, pp. 149-162 (1973).

[12] P. Lennie, "Parallel Visual Pathways: A Review," *Vision Research* **20**, pp. 561-594 (1980).

[13] N. Murata, C. Hirano, M. Ohoka, and S. Nagahara, "Development of a 3-MOS Color Camera," *SMPTE Journal* **92**, pp. 1270-1273 (December, 1983).

[14] H. Sakata and H. Isano, "The Chromatic Spatial Frequency Characteristics of Human Vision," Natl. Conv. of ITE Japan 1-5 (1973).

[15] A. J. Seyler and Z. L. Budrikis, "Detail Perception After Scene Changes in Television Image Presentation," *IEEE Transactions on Information Theory*, pp. 31-43 (1965).

[16] O. Shade, "On the Quality of Color-Television Images and the Perception of Color Detail," *SMPTE Journal* **67**, pp. 801-819 (1958).

[17] B. Wendland, "Extended Definition Television with High Picture Quality," *SMPTE Journal* **92**, pp. 1028-1035 (October, 1983).

[18] B. Wendland and H. Shroeder, "On Picture Quality of Some Signal Processing Techniques," *SMPTE Journal* **93**, pp. 915-922 (1984).

[19] G. J. C. Van der Horst and M. A. Bouman, "Spatiotemporal Chromaticity Discrimination," *J. Opt. Soc. Am.* **59**, pp. 1482-1488 (1969).

IMPROVED HDTV WITH COMPATIBLE TRANSMISSION

Introduction

The issue of compatibility of an HDTV transmission system is one that generates much debate. Most often, compatibility, concerns the relationship between new HDTV systems and existing television broadcast formats (NTSC, PAL, SECAM). We have termed this "downward" compatibility, to distinguish it from several other types of compatibility that also warrant consideration. One question frequently posed about downward compatibility is that of how to display the wider 3x5 aspect ratio of HDTV with the existing 3x4 aspect ratio of standard 525-line television. We will suggest a method for achieving aspect ratio compatibility.

Although a world standard for HDTV production has yet to be established, much equipment today operates with an 1125-line, interlaced, 60 field/sec. format. Since this is taken as a de facto production standard, it is desirable or any proposed HDTV transmission system to be "upwardly" compatible with HDTV production equipment that is currently in use.

Finally, a frequently overlooked aspect of compatibility is compatibility of an HDTV transmission system with performance of the human visual system. By the notion of "visual-system compatibility" we are not referring to subjective evaluation of HDTV images. Rather, the idea is a more fundamental one: that of starting from an understanding of the human visual system's limiting performance and information processing capabilities, in order to design an electronic imaging system that will match these properties. This basic information is obtained primarily from human psychophysical measurements, and from microelectrode studies of visually sensitive neurons in experimental animals.

We shall consider compatibility in these three forms - downward, upward and visual-system compatibility, as each form relates significantly to the design of an HDTV transmission system.

NYIT-HDTV System

NYIT is currently developing an HDTV transmission system that differs markedly in its conceptual basis from others that have been proposed. Like some others, it is a two-channel system, and uses a bandwidth compression algorithm to reduce the spectrum requirements for the additional information that must be sent to achieve high resolution images. Unlike the others, however, the NYIT system is based on well-known spatio-temporal

characteristics of the human visual system. The basic premise is that the most successful bandwidth compression scheme will be one that is compatible with the rules by which the human visual system operates to extract information from the physical world. One noticeable characteristic of HDTV is its enhanced sharpness of resolution produced by an increase in the images' high spatial-frequency information content. Inasmuch as the visual system requires a longer duration to perceive high than low spatial-frequency information, we have designed a system that operates on the same principle. High spatial-frequency information is transmitted at lower-than-normal frame rates (i.e., 7.5 to 15 frames/sec. rather than the usual 30). This scheme has a two-fold advantage over others that do not rely on visual system design characteristics. First, it produces a truly high-resolution image, of above 800 lines, as measured on a standard EIA test-chart wedge. Secondly, it permits a reduction of spectrum bandwidth needed for transmission of an HDTV image. Rather than 30 MHz, the NYIT-HDTV system will operate with a total bandwidth of between 7 and 9.5 MHz, depending on the frame rate chosen for transmission of the high spatial-frequency, or "detail", information.

At the heart of the NYIT system is a digital signal processor that uses a two-dimensional spatial high-pass filter. By this means, the high spatial-frequency components of the image are separated from the remainder of the signal. The "remainder" of the signal can be in NTSC, PAL, SECAM or any other 525-line standard format.

This digital separation of the detail information from the "base band" 525-line information is the means by which the NYIT system accomplishes downward compatibility with existing systems. The inclusion of the 525-line, 60 fields per second "base-band" channel in an HDTV system is not only important for downward compatibility, but is actually needed in order to achieve adequate motion rendition in the HDTV image. The converse of the high-spatial/low-temporal frequency tradeoff is also true of vision. For low spatial-resolution portions of the image, better temporal response is needed than for detail, in order to satisfy the visual system's stringent requirements for realistic depiction of motion. The 60-field rate of the standard channel satisfies these requirements.

Broadcasters will continue to transmit a 525-line signal in the local standard. This broadcast can continue at the broadcast channel frequency the station now uses. Those who wish to upgrade transmissions to HDTV do so by co-transmission of an augmentation channel to carry the detail information. This augmentation channel can be in any part of the spectrum that is available (in UHF for example). Detail information that is sent at a lower frame rate such as 7.5 fps, requires only an additional half-channel for its transmission. Figure 1 depicts