PUBLIC INTEREST ISSUES

NOTE: Questions 22 and 23 are answered jointly below.

22. What are the possible consequences, for terrestrial broadcasting, of the non-broadcast uses of advanced television?

23. What is the expected effect of these consequences on the overall quality, quantity and value of video programming delivered to American viewers?

Beneficial consequences for broadcasters and viewers will result if a uniform standard for broadcast and non-broadcast ATV is adopted. A diversity of standards will lead to delays and higher costs for broadcasters and consumers alike. If no system of ATV is available to terrestrial broadcasters, they would inevitably suffer as deliverers of an inferior signal. The consequences include loss of audience, loss of revenue, and thus, the attendant loss of ability to provide and improve the wide range of information and entertainment services consumers expect.

The continued existence of local broadcasters as an important part of the life of the American public depends absolutely on their ability to deliver a signal as good as that available from any other video source. This goal is technically reasonable. The existence of an informed American public depends on local broadcasters maintaining the financial and technical resources to provide local news and local public affairs information.

Not only must broadcasters be able to transmit signals as advanced as their non-broadcast competition, but the channels over which they do so must be as high quality as possible. This is even more important for ATV, with its superior images, than it is for standard NTSC. Among other issues, this means that freedom from interference is paramount. Sharing spectrum space is not consistent with this need, as has been discussed elsewhere. The highest possible signal-to-noise ratio is also necessary. This

requirement limits the efficacy of some alternative spectrum proposals. If high quality channels are not available, broadcasters may be unable to compete with non-broadcast delivery, no matter what ATV system ultimately prevails.

ATV systems that can be recorded on home video tape players or reproduced on video disks and that can also be broadcast over air or via cable are more attractive than systems that are limited to one delivery medium. The former offer the clearest opportunity for receiver manufacturers and the easiest, least expensive, and least confusing option for consumers. Such universal systems benefit both broadcasters and non-broadcast video distributors by providing a large base of consumer receivers.

The consequences of a universal, receiver-compatible, upgradable standard for ATV are favorable for consumers in that they 1) have immediate access to the new programming, 2) can upgrade their receivers with minimum cost and confusion at their own pace (which can depend on *their own* perception of the importance and success of the new medium), and, 3) will benefit from the widest possible competition for good programming to attract their viewing time.

In summary, a single, receiver-compatible, upgradable standard would benefit broadcasters, non-broadcasters, receiver manufacturers, and consumers alike. The Commission must resolve standards issues. We submit that ACTV is a candidate standard. It promises significantly improved images, is deliverable over air, cable, tape, disk, satellite, etc., is receiver-compatible, and can be upgraded to HDTV performance with additional bandwidth. It delays the need for this additional spectrum, permitting interference and taboo issues to be studied thoroughly without delaying the introduction of ATV. However, it does <u>not eliminate</u> the need for additional spectrum in the future and the need to protect this spectrum from interference now.

SPECTRUM ALLOCATION ISSUES

NOTE: Questions 24 and 25 are answered jointly below.

24. Under what circumstances would the public be disadvantaged under a regime, such as the plan discussed above, where television licensees were authorized some discretion in the deployment of any augmented spectrum capacity they might be assigned?

25. As compared to the plan offered above, what are the relative advantages and disadvantages of providing for "non-conforming" use on augmented channels in a manner similar to that used for such operations in the Direct Broadcast Satellite service?

The disadvantages of authorizing television licensees some discretionary use of the augmented spectrum, either conforming or non-conforming, would be a likely delay in the introduction of HDTV and unknown interference potential to existing UHF TV signals. Some broadcasters might elect to introduce a new point-to-multipoint service that would be difficult to discontinue when HDTV technology matures. Other broadcasters might decide to use that spectrum for HDTV and then find that the potential consumer interest is difficult to build because the other area broadcasters have introduced preclusionary services in the HDTV spectrum. The advantages might include the possible introduction of new consumer services, as yet unspecified. Of course, if new services were to be authorized on frequencies presently embraced by the UHF taboos, there is no way to predict what interference might be created to existing UHF TV reception. The best recommendation is that no change to the Commission's Table of Frequency Allocation (FCC Rule Section 2.106) would serve the public interest at this time.

INTERFERENCE RIGHTS & RESPONSIBILITIES

26. What are the public interest gains and losses of giving licensees greater discretion in determining the levels of interference they wish to tolerate?

Relaxation of the mandatory NTSC standard or of the UHF taboos should be considered after careful study of the specifics of proposed ATV systems and only after thorough characterization of their performance. Much of the success of NTSC has been built on knowledge of the effects of transmission path impairments on its video and audio reception; such knowledge is not yet available for ATV. The public has also benefited from the ability to apply uniform standards to the television receivers which it purchases. If different markets are allowed to have different degrees of "standardization" or different levels of expected interference, such uniformity is sacrificed.

26.a. Under what circumstances would application by the Commission of a uniform interference protection policy be adverse to the aggregate best interests of the viewers?

Viewers' aggregate best interests are served by a uniform interference protection policy. This will provide an environment of stability for the design and characterization of new ATV systems and will create standards against which receivers can be designed. It will assure that a consumer who moves to a new home in a new community can continue to use an existing receiver.

26.*b. Under what circumstances would an arrangement beneficial to all affected licensees be, nonetheless, adverse to the best interests of all affected viewers?*

The fortunes of the licensees and their viewers are inextricably entwined, and so they have common best interests. The only exception to this general

statement would be institution of new discretionary services aimed not at "viewers" but rather at some other constituency, such as industry or government. The impact of such services on viewers has been discussed in answering Questions 24 and 25.

26.c. To what extent is the issue of allowing licensees to privately negotiate and agree upon levels of interference necessary for the development of advanced broadcast television?

Private negotiations are not necessary. Licensees and others with appropriate credentials should advise the Commission in a full rule-making proceeding about the types and levels of interference they could tolerate without compromising a specified ATV system. Their comments would form the basis for the Commission's determination of a uniform policy or regulation. The advantages of such uniformity are discussed in the answer to Question 26.a.

26.d. What is the possibility that contracts or negotiated agreements would result in the practice of excluding less desirable demographic areas from receiving service?

Fringe reception areas may be excluded from ATV service in any circumstance simply because the received signal-to-noise ratio may be too poor to permit noticeably improved images. The David Sarnoff Research Center does not wish to speculate on the additional effects of possible negotiations between licensees.

NOTE: The David Sarnoff Research Center has no Comment regarding Questions 27, 28, and 29 of the Inquiry.

CONCLUSIONS

The preceding Comments discuss the ATV technology of today and its expected changes in the coming decades. The comments argue strongly for planned and studied evolution from today's NTSC through receiver-compatible ATV in the near future to full HDTV when display technology and RF spectrum availability permit. Implicit in this approach are requirements that broadcast spectrum be preserved and that uniform standards be adopted.

Specifically, the present-day situation is that:

Display technology suitable for ATV exists, but the combination of large size, high resolution, and high brightness needed for consumer HDTV does not.

Receivers in homes depend on the UHF taboos to achieve adequate performance. These receivers will continue to be used for at least a decade.

The microwave bands are unsuitable for terrestrial television broadcasting.

An evolutionary approach to HDTV requires that more bandwidth be available to each broadcaster. Eventual relaxation of the UHF taboos could provide this spectrum in the existing broadcast bands. A formal study should be begun to provide scientific basis for a relaxation plan.

The adoption of uniform standards, which in this case should apply to broadcast and non-broadcast delivery, is the only way that consumer products of such high sales volume as television receivers can succeed. Examples include compatible color and multichannel sound.

An ATV system is an economically and technically logical next step. The attributes of a successful ATV system must include these features:

It must be receiver-compatible.

It must match available consumer display technology.

It should be bandwidth-efficient. This means that single, 6 MHz channel systems are preferred because their implementation can proceed even before UHF taboos can be relaxed.

The improvements must be perceptible to consumers. At a minimum this must include wider aspect ratio screens. Improved resolution should be an additional part of any new system.

It must be upgradable in a reverse-compatible manner to HDTV.

The David Sarnoff Research Center has proposed ACTV as a system that matches these attributes.

SUMMARY OF THE COMMENTS OF THE DAVID SARNOFF RESEARCH CENTER

Broadcasters, program producers, cable operators, TV receiver manufacturers, and consumers are all eager to see an improvement in the quality of television images delivered to the home. The introduction of ATV is in the public interest, and the time to plan for it is now. Full HDTV quality should be the ultimate goal, but the Commission should recognize that practical realization of full HDTV quality requires display device technology that is beyond the current state of the art for consumer products and also requires additional spectrum that cannot currently be allocated. The Commission should adopt a plan that will lead from present NTSC to full HDTV by an orderly, evolutionary process that does not instantly obsolete the installed base of production hardware, distribution hardware, and, most especially, NTSC television receivers.

The process should be accomplished in two steps. The first step is the implementation of an ATV system that offers a wide-aspect ratio picture with improved resolution. The signal format should be fully compatible with present NTSC receivers and should be capable of distribution over present NTSC facilities (inter-city links, transmitters, cable systems, etc.) with little or no modification to these facilities. The images produced by such a system, although not full HDTV quality, will be substantially superior to the best NTSC images. The programs for this ATV system should be produced and recorded in full HDTV format, thus building a library of material for future HDTV transmission.

This first step can be taken without undue delay. HDTV production equipment is currently available. The technology to implement an ATV system is also within the current state of the art with respect to both signal processing and display requirements and can be employed in cost-effective consumer products. Perhaps most importantly, the present distribution and transmission facilities can be used without the need for major equipment changes or the allocation of new spectrum.

The second step to full HDTV would be accomplished by transmission of an augmentation signal that, combined with the ATV signal, would produce a full HDTV image. Implementation of this step is not envisioned for about a decade, but it is necessary to plan for it now to ensure that suitable spectrum will be available for the augmentation signal. The only suitable scenario for obtaining the required spectrum is relaxation of the UHF taboos. This will require new receivers (both NTSC and ATV) to meet appropriate criteria for UHF performance such that the taboos can be relaxed. Studies leading to a plan are urgently needed. In the meantime, the UHF spectrum must be protected from further interference caused by sharing with other services.

A great deal of work remains to be done jointly by the broadcast, cable, and consumer electronics industries before the optimum advanced television system for the United States emerges. The David Sarnoff Research Center is proud to play a role in this exciting and important period in the development of advanced television technology in the United States.

Respectfully submitted,

David Sarnoff Research Center, Inc.

by:

November 17, 1987

Dr. James E. Carnes
Vice President
Consumer Electronics and
Information Sciences

David Sarnoff Research Center, Inc.
CN 5300
Washington Road
Princeton, NJ 08543-5300

Appendix A

Encoding for Compatibility and Recoverability in the ACTV System

M.A. Isnardi, J.S. Fuhrer, T.R. Smith, J.L. Koslov, B.J. Roeder, W.F. Wedam

David Sarnoff Research Center
Princeton, NJ

***Abstract* - This paper describes an advanced compatible television (ACTV) system intended for the single-channel transmission of widescreen EDTV images. Existing NTSC receivers display a selected 4:3 portion of the widescreen image with standard NTSC resolution. However, a new widescreen receiver, tuned to the same 6-MHz RF channel, displays a widescreen image with a resolution in excess of 400 lines/picture height in both spatial dimensions. To produce the NTSC-compatible signal, the original widescreen high-definition signal is separated into four components: (1) the main NTSC signal with the side panel low frequencies time compressed into the horizontal overscan regions, (2) the time-expanded side panel high frequencies, (3) the extended horizontal luminance detail, and (4) the extended vertical-temporal luminance detail. Components 2 and 3 are quadrature modulated at low amplitude by a new phase-controlled subcarrier at 3.1 MHz. Component 4 is inserted in quadrature with the RF picture carrier. This paper discusses how the four components are processed to insure full compatibility at the NTSC receiver and complete recoverability at the ACTV receiver.**

INTRODUCTION

For the past half century, television has witnessed an evolutionary growth. In the U.S. and other countries embracing the NTSC standard, the introduction of noticeable improvements, namely color and stereo sound, occurred in a fully backward-compatible manner, even though non-compatible solutions were offered. Retaining the usefulness of the large installed base of existing consumer receivers and conserving spectral bandwidth were, and continue to be, driving concerns in the broadcast industry. Compatibility, therefore, is an important issue that cannot be neglected in any future improvement that involves transmitting extra information.

A recent advance in video cinematography has been the introduction of a complete line of equipment for producing and displaying widescreen high-definition television (HDTV) images [1], [2], [3]. Unfortunately, the camera signal consumes from 20 to 30 MHz of bandwidth, and the signal format (1125/60/2:1/16:9) is incompatible with present NTSC receivers. In an effort to deliver HDTV quality to the home in a more modest 8.1 MHz bandwidth, the MUSE encoding method was developed [4]; however, the MUSE signal is still incompatible with present NTSC receivers, and the multi-dimensional sub-Nyquist sampling produces some motion artifacts.

Proposals that address the compatibility issue fall into two broad categories. In the first category are two-channel systems where one channel is a standard NTSC signal and a portion of a second channel is used to augment the width and/or resolution of the first channel. Principal proponents of two-channel systems are North American Philips [5], [6], [7], Glenn [8], and LoCicero, *et al.* [9]. In the second category are single-channel compatible systems. Iredale [10] and Schreiber [11], [12] have proposed single-channel compatible HDTV systems that form a "pseudo-widescreen" image by reducing the number of active lines. Fukinuki [16] has proposed a method for sending enhanced horizontal resolution in a single NTSC channel, and Yasumoto [13] has proposed single-channel compatible systems for transmitting *either* extended horizontal detail *or* side panel information.

Going far beyond these proposals, the Advanced Compatible Television (ACTV) system described here offers a "true" widescreen image with extended spatial resolution, fits within a single 6-MHz RF channel, and maintains full NTSC compatibility. Because of special prefiltering, a standard NTSC receiver actually benefits by displaying a picture with reduced chroma/luma crosstalk. Furthermore, the ACTV system is *extendible* -- resolution improvements can be incorporated in the future should additional bandwidth become available.

ACTV ENCODER PROCESSING

In this section, we augment the brief overview of the ACTV system described in a previous paper [14]. Discussions of detailed technical issues, decoder processing, and results of ongoing research will appear in future publications.

Original Source Material

The original widescreen high line-rate signal may come from either an interlaced or progressively scanned (pro-scan) high-definition source. However, a 525-line,

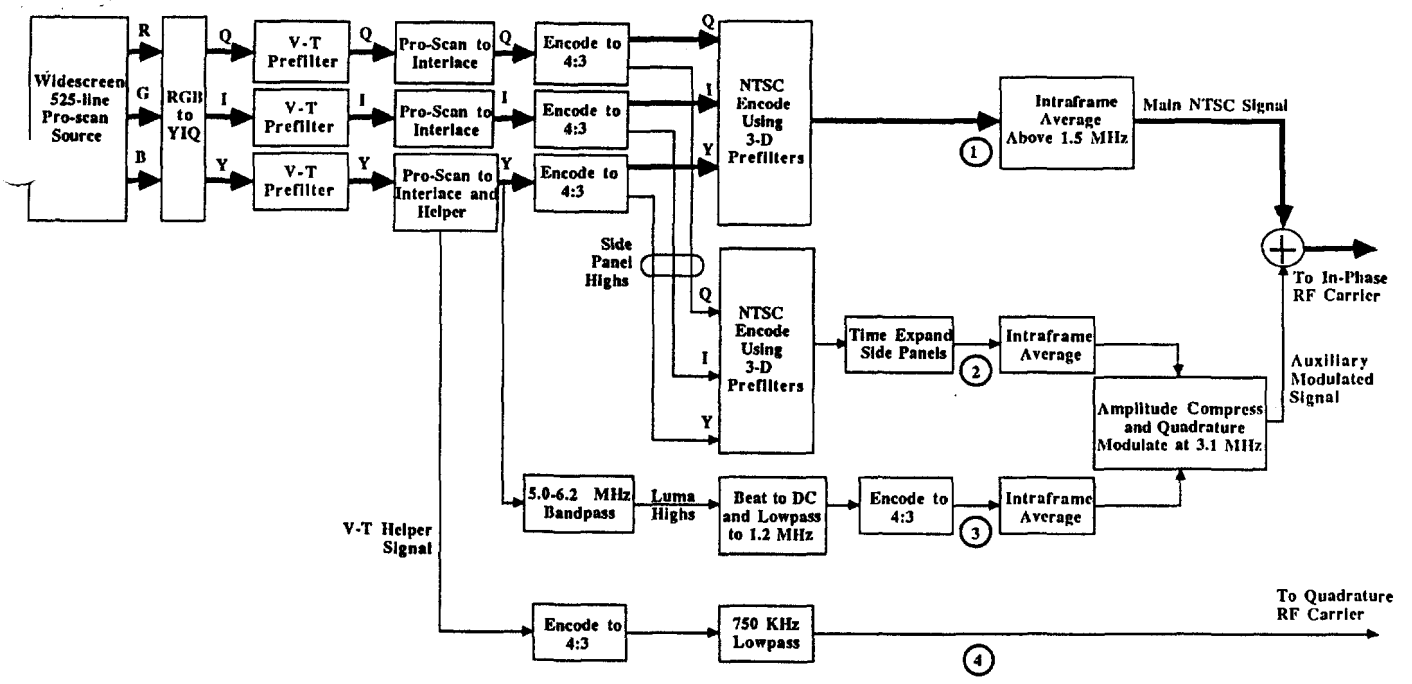

Fig. 1 Block diagram of ACTV encoder. Heavy lines indicate main signal path.

59.94 field/sec pro-scan source is preferred because the scan-conversion and temporal prediction algorithms work best with this format. The widescreen aspect ratio (width:height) is assumed to be 5:3, but the system can handle an even wider aspect ratio of 16:9 with only minor modifications. Throughout the remainder of this paper, a 525-line, 59.94 field/sec, pro-scan source with 5:3 aspect ratio is assumed. The new widescreen high line-rate receiver is assumed to have an equivalent scanning format. For simplicity, assume that the central 4:3 portion of the widescreen image has been selected for display on the conventional NTSC receiver.

The original wideband red, green, and blue (RGB) signals are first matrixed to luminance, Y, and two color-difference signals, I and Q, and sampled at eight times the color subcarrier (8xFSC, or 28.64 MHz). A high-level block diagram of the encoder appears in Fig. 1 and is discussed in the following sections.

V-T Prefiltering of Pro-Scan Signals

The YIQ pro-scan signals are individually lowpass filtered in the vertical-temporal (V-T) plane to reduce the flicker and V-T aliasing that would otherwise occur in the compatible interlaced signal. The top portion of Fig. 2 shows the 5-tap lowpass filter that is used to attenuate high V-T frequencies in the pro-scan spectrum.

Pro-Scan to Interlace Conversion

Each pro-scan signal is converted to 2:1 interlace by ...aining either the odd or even lines in each field and then reading out the retained pixels at a 4xFSC (14.32 MHz) rate. See Fig. 2. All subsequent digital processing of interlaced signals occurs at the 4xFSC rate. The prefiltering performed in the previous step reduces the V-T aliasing that would otherwise result from interlaced subsampling. Any aliasing in the interlaced chrominance signals will be eliminated by a second V-T lowpass filter in the chroma/luma encoder.

The interlaced luma signal may still contain some residual V-T aliasing that will manifest itself as an annoying "beat" between moving diagonal edges and the scanning structure. This artifact is inherent to NTSC and other interlaced signal formats. Unfortunately, no unassisted interpolation method has been found that can eliminate this undesirable artifact and retain V-T resolution without introducing motion artifacts. Therefore, a V-T "helper" signal is sent to assist the ACTV receiver in the conversion from interlaced to pro-scan format.

The Helper Signal

The luminance helper signal is actually a *temporal prediction error*. Fig. 2 shows the algorithm used to create it. Consider pixels A, X, and B, which are in the same *spatial* position in the image. At the encoder, a prediction is made for "missing" pixel (X) by averaging the "before" and "after" pixels (A and B). The prediction is subtracted from the actual value, and the error between the two becomes a sample of the helper signal. The helper signal is bandlimited to about 750 KHz and is transmitted in quadrature with the main RF picture carrier [13].

At the ACTV receiver, a similar prediction of missing pixel X is made using an average of samples A and B, and the error is *added* to the prediction. Thus, the conversion from interlaced to pro-scan format is assisted

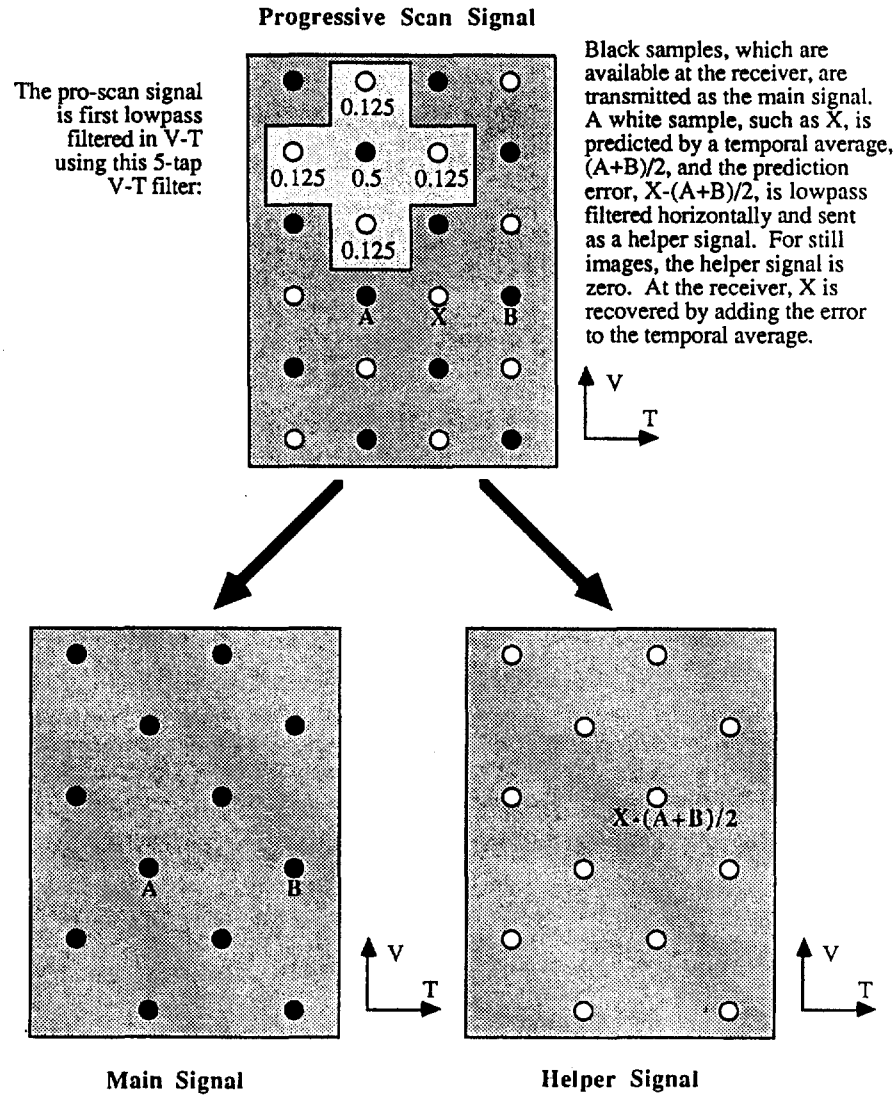

Fig. 2 V-T prefiltering (top) and pro-scan to interlace conversion (top to bottom) showing algorithm for helper signal.

by the V-T helper signal.

Although many algorithms were analyzed, this one was chosen for several reasons. A temporal prediction error is naturally a *low-energy* signal. In still areas of the image, the error is zero because the prediction is perfect. Also, the helper signal must retain its usefulness after it is bandlimited to about 750 KHz, and this algorithm produces the least objectionable artifacts (slightly jagged edges on moving objects) after bandlimited reconstruction. Finally, if the helper signal is not transmitted at all, the result is still a highly improved reconstructed widescreen picture. Still portions of the image will be much sharper than NTSC, but moving portions will be somewhat softer and will exhibit the usual "beating" artifact. Thus, a broadcaster need not transmit the helper signal initially, but can choose to upgrade the RF transmitter at any time.

If the original widescreen HDTV image comes from an *interlaced* source, the temporal prediction will be imperfect even in still portions of the image. The helper signal will have more energy, and it will introduce slight artifacts in the still portions of the reconstructed image. Experiments have shown that an interlaced source yields acceptable results, but a pro-scan source introduces fewer artifacts.

Encoding the Main Signal (Component 1)

The YIQ signals, now in 2:1 interlaced format, must be converted from widescreen to standard 4:3 aspect ratio. To begin, it is important to understand that the active and total line times of the widescreen and NTSC signals are identical (52 μs and 63.56 μs, respectively). Because the widescreen camera has effectively scanned a *greater angular distance* in the same amount of time, the horizontal bandwidth is proportionately increased. The aspect ratio conversion is shown pictorially in Fig. 3.

As a first step in the conversion process, the central 4:3 portion of each widescreen line is time expanded to fill nearly the entire active line time (50 μs) of the compatible

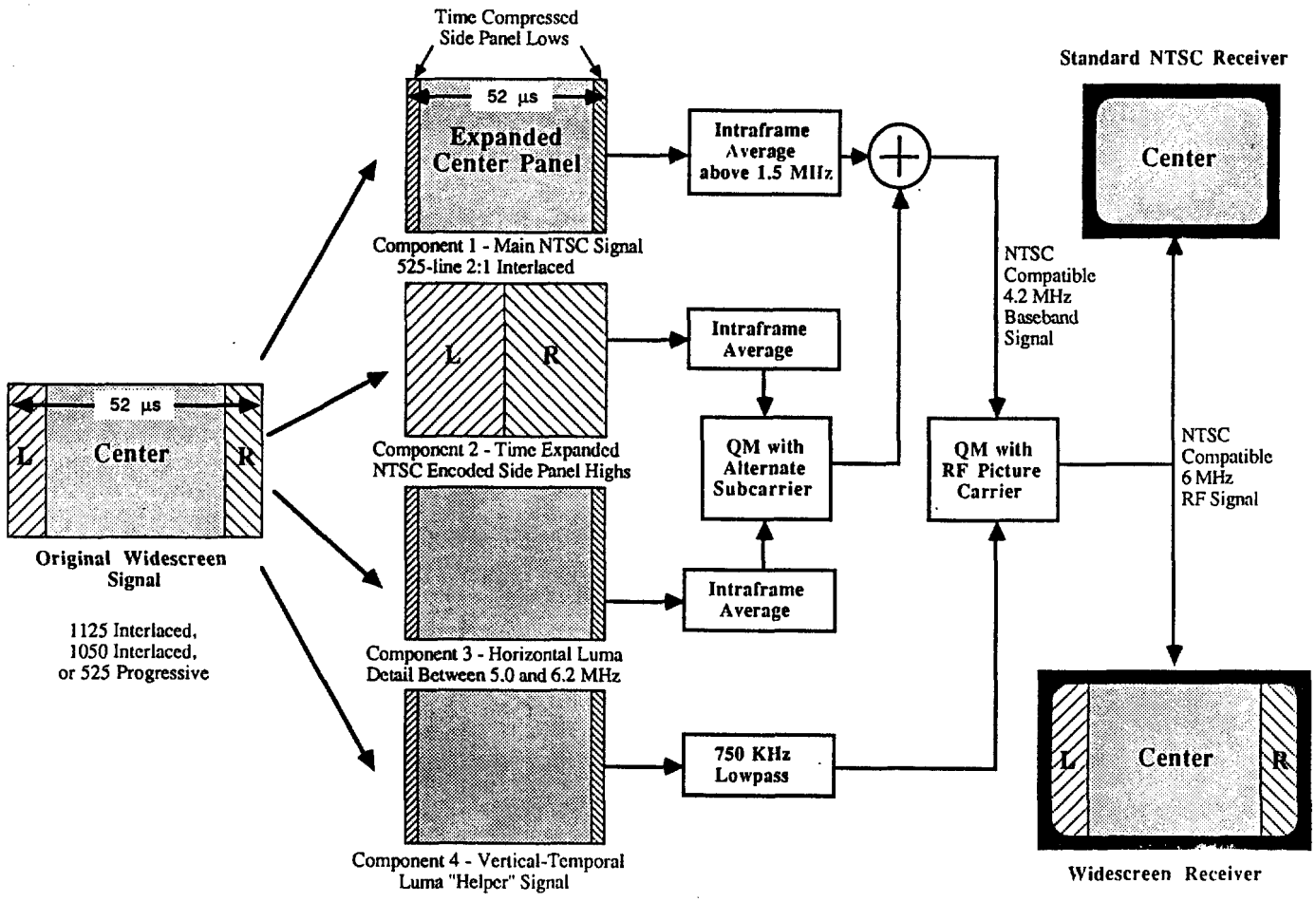

Fig. 3 ACTV - A Single Channel NTSC Compatible Widescreen EDTV System

signal. Time expansion causes a drop in bandwidth, and original widescreen interlaced frequencies up to 5 MHz (luma) and 600 KHz (chroma) can now fit into standard NTSC bandwidths (I and Q are assumed to have equivalent bandwidths).

The side panels are separated into two horizontal frequency bands, the "lows" and the "highs", and are processed in a different manner. Intentionally, 1 µs on each side of the active line is reserved for time compression of the side panel lows. The compressed lows, which contain the DC component and most of the signal energy in the side panels, are conveniently hidden by the normal horizontal overscan in nearly all home receivers. The compression factor for the side panel lows is approximately six for a 5:3 aspect ratio widescreen image. To fit into the standard NTSC bandwidths, the cutoff frequencies in the side panels are approximately 700 KHz for luma and 83 KHz for chroma.

The resulting YIQ signals now contain both the central 4:3 portion of the widescreen image and the side panel lows compressed into the left and right overscan regions. These signals have standard NTSC bandwidths (4.2 MHz for luma and 500 KHz for chroma) and are now NTSC encoded using three-dimensional (3-D) prefilters. Luma is bandstop filtered in 3-D to produce a spectral "hole" into which chroma is quadrature modulated at 3.58 MHz. Chroma has also been bandlimited in all three dimensions so that luma and modulated chroma now have little or no overlap in the 3-D spectrum. Complementary 3-D bandpass filtering at the ACTV receiver can separate luma and chroma virtually free from crosstalk. However, even conventional notch and line-comb receivers will exhibit reduced chroma/luma crosstalk from this 3-D prefiltering, yielding an improvement in image quality for standard NTSC receivers. The use of complementary filters for luma/chroma encoding and decoding is called *cooperative processing* [15]. The resulting composite signal, called the Main NTSC Signal, is shown as Component 1 in Fig. 3.

Encoding the Side Panel Highs (Component 2)

The horizontal high frequencies in the side panels must be transmitted in order to match the resolution in the center panel. The side panel highs are encoded as follows. The luminance highs (in the range 700 KHz - 5 MHz) and the chrominance highs (in the range 83 KHz - 600 KHz) from the widescreen interlaced signals are prefiltered in 3-D, as described above, and chroma is quadrature modulated onto luma at 3.58 MHz. The composite side panels, which occupy about 6 µs on each end of the active line, are time expanded so that they fill the entire active line time. The time expansion causes a drop in overall bandwidth to about 1 MHz. The resulting signal is shown

as Component 2 in Fig. 3. The time expanded side panel highs are, in general, spatially uncorrelated with the main signal, and special precautions must be taken to mask their visibility on standard NTSC receivers.

Encoding the Extra Horizontal Detail (Component 3)

Components 1 and 2 can carry up to 5 MHz of horizontal luminance information. To provide extended horizontal resolution, the luma detail in the range 5.0 - 6.2 MHz is encoded in the following manner. First, this band of frequencies is frequency shifted to the range 0.0 - 1.2 MHz by amplitude modulation with a 5.0 MHz suppressed carrier, followed by lowpass filtering to 1.2 MHz. Then, the central 4:3 portion is expanded and the side panel lows are compressed. The overall bandwidth is reduced to about 1.1 MHz, and this component becomes spatially correlated with main signal. The resulting signal is shown as Component 3 in Fig. 3.

Encoding the V-T Helper Signal (Component 4)

The central 4:3 portion of the helper signal is expanded and the side panel lows are compressed. This component becomes spatially correlated with the main signal, which is important for compatibility reasons. The resulting signal is shown as Component 4 in Fig. 3. The helper signal is lowpass filtered to about 750 KHz and sent in quadrature with the RF picture carrier.

COMPATIBILITY AND RECOVERABILITY

At this point, the original widescreen HDTV image has been separated into four components; if reconstructed, they would reproduce a widescreen EDTV image. However, these four components must first be combined into a standard NTSC signal and transmitted over a single 6-MHz RF channel. In doing so, two important issues must be addressed: compatibility and recoverability. Compatibility means that the extra components must be *physically or perceptually hidden* in the main signal when displayed on standard NTSC receivers. Recoverability means that all components must be *separated without crosstalk* in the new ACTV receiver. The ACTV system achieves both compatibility and recoverability through a novel combination of signal processing methods.

To achieve compatibility, the ACTV system uses the following techniques to hide the extra components. First, as discussed above, the high-energy side panel lows are *physically hidden* in the normal horizontal overscan of existing NTSC receivers. Second, Components 2 and 3, which are naturally low-energy signals, are amplitude compressed and quadrature modulated onto an alternate subcarrier at 3.1 MHz. The subcarrier is an interlaced frequency (an odd multiple of half the line rate) whose phase is inverted on alternate fields [16]. Although the modulated components reside entirely within the chroma band (2.0 - 4.2 MHz), they are *perceptually hidden* because they are displayed as 30-Hz complementary-color flicker, which is not perceived by the human visual system at normal levels of chroma saturation. Component 4, the helper signal, is *electrically removed* on NTSC sets with synchronous RF detectors, and is *perceptually hidden* on NTSC sets with envelope detectors because it is spatially correlated with the main signal.

To achieve recoverability of Components 1, 2, and 3, a novel process called *intraframe averaging* was developed. Intraframe averaging is a linear, *time-varying* digital filtering technique that can separate a modulated signal from a baseband signal free from V-T crosstalk, *even in the presence of motion*. Horizontal crosstalk is eliminated by guardbands between horizontal pre- and post-filters. If crosstalk occurred in this system, the results would be disastrous -- side panel information would appear in the center panel, and vice versa. Therefore, side/center crosstalk must be eliminated.

The intraframe averaging method is shown in Fig. 4. Starting with Components 2 and 3, pairs of pixels 262H (one field) apart *within a frame* are averaged, and the average value replaces the original pixel values. An important point is that this V-T averaging occurs only within a frame and does not cross frame boundaries. In Component 1, intraframe averaging is performed only on frequencies above 1.5 MHz. In Components 1 and 2, note that the averaging is performed on a *composite* signal throughout the entire chroma band. The composite signal survives intraframe averaging because pixels 262H apart are "in-phase" with respect to the color subcarrier. The phase of the new, alternate subcarrier is controlled so that it is exactly out of phase for pixels 262H apart. Therefore, when Components 2 and 3 are quadrature modulated and added to Component 1, pixels 262H apart have the form (M+A) and (M-A), where M is a sample of the main composite signal above 1.5 MHz, and A is a sample of the auxiliary modulated signal.

At the receiver, it is a simple matter to average and difference pixels 262H apart within a frame to completely separate the main samples from the auxiliary samples. With intraframe averaging, V-T crosstalk is exactly eliminated, even in the presence of motion. Furthermore, it is achieved using a single frame store, which is in contrast to linear time-invariant methods that require several frame stores to produce similar results [18].

Fig. 5 shows the 6-MHz RF NTSC spectrum after the extra components have been added. The frequency of the alternate subcarrier, FAC, is shown at 3.1 MHz. The side panel highs and extra horizontal luma detail extend to 1.1 MHz on either side of FAC. The V-T helper signal extends 750 KHz on either side of the main picture carrier.

ACTV DECODER PROCESSING

At the ACTV receiver, the 6-MHz RF channel is quadrature demodulated using a synchronous RF detector. Component 4 is thereby separated from the other three components. Intraframe averaging and differencing is used to separate Component 1 from the modulated components. Quadrature demodulation is used to separate Components 2 and 3.

At this point, all four components have been recovered. The composite signals are NTSC decoded

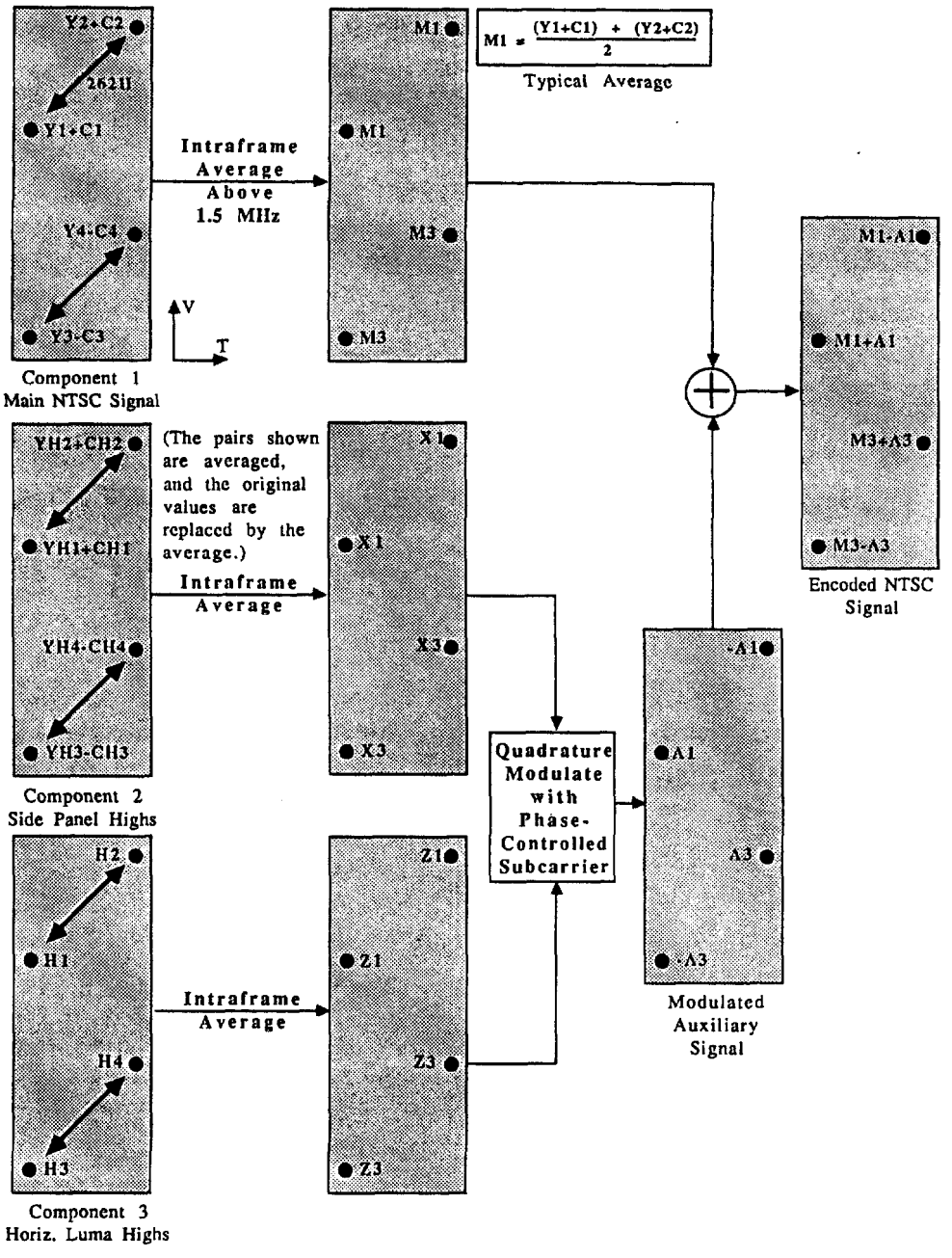

Fig. 4 Graphical explanation of intraframe averaging.

using 3-D complementary bandpass filtering, and are separated into YIQ signals. Inverse mappings are performed on all components to recover the widescreen aspect ratio, and the side panel highs are combined with the lows to recover full side panel resolution. The extended horizontal luminance detail is shifted to its original frequency range and added to the luminance signal, which is converted to pro-scan using temporal interpolation and the helper signal. The chroma signals are converted to pro-scan using unassisted temporal interpolation. Finally, the YIQ pro-scan signals are converted to analog form and matrixed to RGB for display on a widescreen pro-scan monitor. Details of the decoder processing will appear in a future publication.

COMPUTER SIMULATION RESULTS

The entire system was simulated in FORTRAN on a VAX 8800 batch processor at the David Sarnoff Research Center's Digital Video Facility [17]. Simulations were performed on three types of widescreen formats: (1) 525-line progressive scan, (2) 1050-line 2:1 interlaced, and (3) 1125-line 2:1 interlaced, all sampled at 910 times the corresponding line rate. Although the pro-scan format produced superior results, the 1125-line interlaced format was used for much of the analysis and for demonstrations because of the abundance of interesting source material. In addition, tape recorders, editing machines, and displays

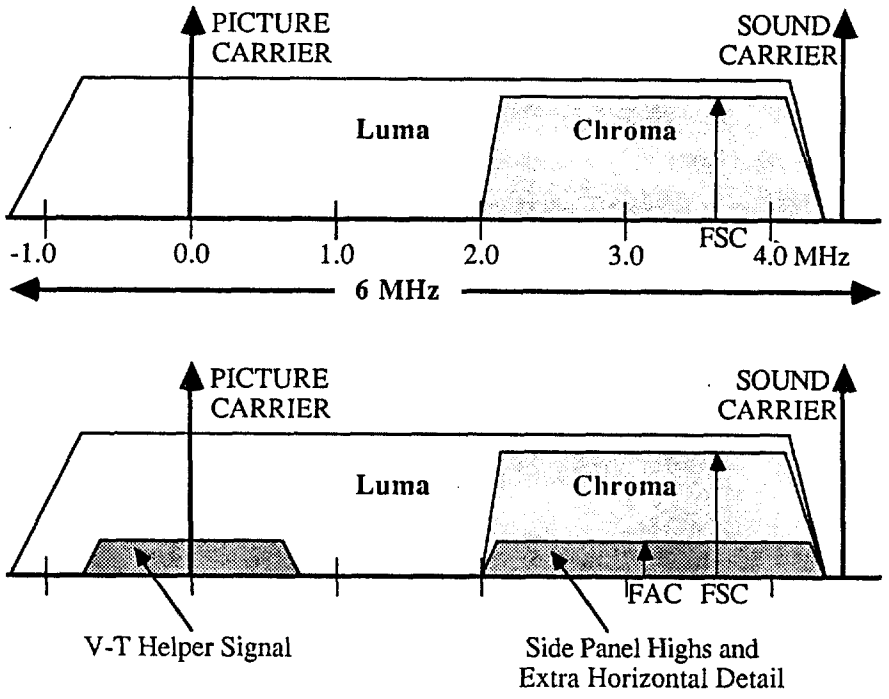

Fig. 5 Standard NTSC RF spectrum (top) and ACTV RF spectrum (bottom), showing location of extra modulated components.

were readily available in 1125-line interlaced format.

A variety of widescreen source material was tested. Many still images, including natural imagery and resolution charts, were processed and analyzed for static artifacts. In addition, several motion sequences, ranging from one-half to twelve seconds in duration, were processed and analyzed for motion artifacts.

At normal viewing distances, the reconstructed widescreen image offers noticeable improvements over a standard NTSC image. The most significant improvement is the wider, "film-like" look. The widescreen picture is *quieter* , virtually free from the interline flicker so common in NTSC sets. It is also *cleaner*, virtually free from crawling dots, hanging dots, and spurious rainbow patterns. The widescreen picture has noticeably *increased resolution* in both spatial dimensions. On a standard resolution chart, the new ACTV system resolves about 410 lines/picture height horizontally and in excess of 450 lines vertically. Line structure is not visible because of the increased line density. In moving portions of the picture, a startling improvement is the absence of the beat between moving horizontal edges and the scanning structure, an artifact so annoying in conventional NTSC.

The improvements mentioned above are the result of a perceptual trade-off -- selected picture detail is *replaced* with perceptually more important information. Because of the trade-offs in the system design, the reconstructed widescreen signal is not completely free from artifacts, and research is currently focussed on reducing them as much as possible. The artifacts are caused by a combination of intraframe averaging, V-T filtering, and horizontally bandlimiting the "helper" signal. Static areas of the image exhibit slightly jagged diagonal edges, caused by intraframe averaging. Moving areas reveal several artifacts: (1) a slight loss of spatio-temporal resolution, caused by the V-T luma/chroma pre-filter, (2) a slight judder, not unlike film, caused by intraframe averaging, and (3) a slight flicker along moving diagonal edges, caused by the bandlimited "helper" signal. All artifacts are more pronounced in the side panels.

FUTURE RESEARCH

The detailed computer simulation allowed many new ideas to be tried in a relatively short period of time. Some ideas produced disappointing results and were discarded; others looked promising and were refined. After much refinement, the simulation yielded a system that worked, and a hardware version of the system described in this paper is currently under construction. The hardware prototype is flexible enough to allow further optimization.

Current research is aimed at assessing the effects of noise in the transmission channel and imperfect recovery of the extra components. The impact of wideband noise, impulse noise, multipath, quadrature distortion, and other degradations on the quality of the reconstructed widescreen picture is being studied. Also under investigation is the impairment to intercarrier sound, BTSC stereo, and the SAP audio channel caused by the helper signal, which is quadrature modulated with the RF picture carrier. Computer simulations have already yielded useful results; however, an RF hardware testbed is under construction that will allow a more in-depth analysis

of realistic channel impairments.

Future research is aimed at reducing the static and motion artifacts, increasing the chroma resolution, and analyzing the system's performance in the presence of channel noise and other degradations.

CONCLUSIONS

A new single channel, NTSC compatible EDTV widescreen system was designed and simulated in software. An existing NTSC receiver displays a selected 4:3 portion of the widescreen image with standard NTSC resolution and with little degradation caused by the modulation of auxiliary information within the channel. A widescreen receiver recovers the main and auxiliary signals and reconstructs a widescreen, high line rate picture with enhanced luminance detail.

We believe that this system will create a market for widescreen, high line-rate receivers and will also provide an immediate audience for the HDTV source material currently under production.

REFERENCES

[1] T. Fujio, "High Definition Television Systems: Desirable Standards, Signal Forms, and Transmission Systems", *IEEE Trans. Commun.*, **COM-29**, Dec. 1981, pp. 1882-1891.

[2] T. Kubo, "Development of High-Definition TV Displays", *IEEE Trans. Broadcasting*, **BC-28**, No.2, June 1982, pp. 51-64.

[3] T. Ishida, K. Hayashi, T. Taneda, T. Motokoi, and Y. Sugiura, "A 70-mm Film Laser Telecine for High-Definition Television", *SMPTE J.*, Vol. 92, No. 6, June 1983, pp. 629-635.

[4] Y. Ninomiya, Y. Ohtsuka, and Y. Izumi, "A Single Channel HDTV Broadcast System - the MUSE", NHK Laboratories Note No. 304, Sept. 1984.

[5] M. Tsinberg, "ENTSC Two-Channel Compatible HDTV System", *IEEE Trans. Consumer Electronics*, **CE-33**, No. 3, Aug. 1987, pp. 146-153.

[6] C. Basile, "Channel Matching Techniques for 2-Channel Television", *IEEE Trans. Consumer Electronics*, **CE-33**, No. 3, Aug. 1987, pp. 154-161.

[7] A.P. Cavallerano, "Decomposition and Recombination of a Wide Aspect Ratio Image for ENTSC Two-Channel Television," *IEEE Trans. Consumer Electronics*, **CE-33**, No. 3, Aug. 1987, pp. 162-172.

[8] E.G. Glenn and K.G. Glenn, "HDTV Compatible Transmission System", *SMPTE J.*, Vol. 96, No. 3, March 1987, pp. 242-246.

[9] J.L. LoCicero, M. Pazarci, and T.S. Rzeszewski, "A Compatible High-Definition Television System (SLSC) with Chrominance and Aspect Ratio Improvements", *SMPTE J.*, Vol. 94, No. 5., May 1985, pp. 546-558.

[10] R.J. Iredale, "A Proposal for a New High-Definition NTSC Broadcast Protocol", *IEEE Trans. Consumer Electronics*, **CE-33**, No. 1, Feb. 1987, pp. 14-27.

[11] W.F. Schreiber, "Improved Television Systems: NTSC and Beyond", *SMPTE J.*, Vol. 96, No. 8, Aug. 1987, pp. 734-744.

[12] W.F. Schreiber, "6-MHz Single-Channel HDTV Systems", presented at the HDTV Colloquium, Ottawa, Canada, Oct. 4-8, 1987.

[13] Y. Yasumoto, S, Kageyama, S. Inouye, H. Uwabata, and Y. Abe, "An Extended Definition Television System Using Quadrature Modulation of the Video Carrier with Inverse Nyquist Filter", *IEEE Trans. Consumer Electronics*, **CE-33**, No. 3., Aug. 1987, pp. 173-180.

[14] M.A. Isnardi, J.S. Fuhrer, T.R. Smith, J.L. Koslov, B.J. Roeder, and W.F. Wedam, "A Single Channel, NTSC Compatible Widescreen EDTV System", presented at the HDTV Colloquium, Ottawa, Canada, Oct. 4-8, 1987.

[15] C.H. Strolle, "Cooperative Processing for Improved Chrominance/Luminance Separation", *SMPTE J.*, Vol. 95, No. 8, Aug. 1986, pp. 782-789.

[16] T. Fukinuki, Y. Hirano, and H. Yoshigi, "Experiments on Proposed Extended-Definition TV with Full NTSC Compatibility", *SMPTE J.*, Vol. 93, No. 10, Oct. 1984, pp. 923-929.

[17] C.H. Strolle, T.R. Smith, G.A. Reitmeier, and R.P. Borchardt, "Digital Video Processing Facility with Motion Sequence Capability", *ICCE Digest of Technical Papers*, June 5-7, 1985, pp. 178-179.

[18] M.A. Isnardi, "Exploring and Exploiting Subchannels in the NTSC Spectrum", presented at the 129th SMPTE Conference, Los Angeles, Oct. 31 - Nov. 4, 1987.