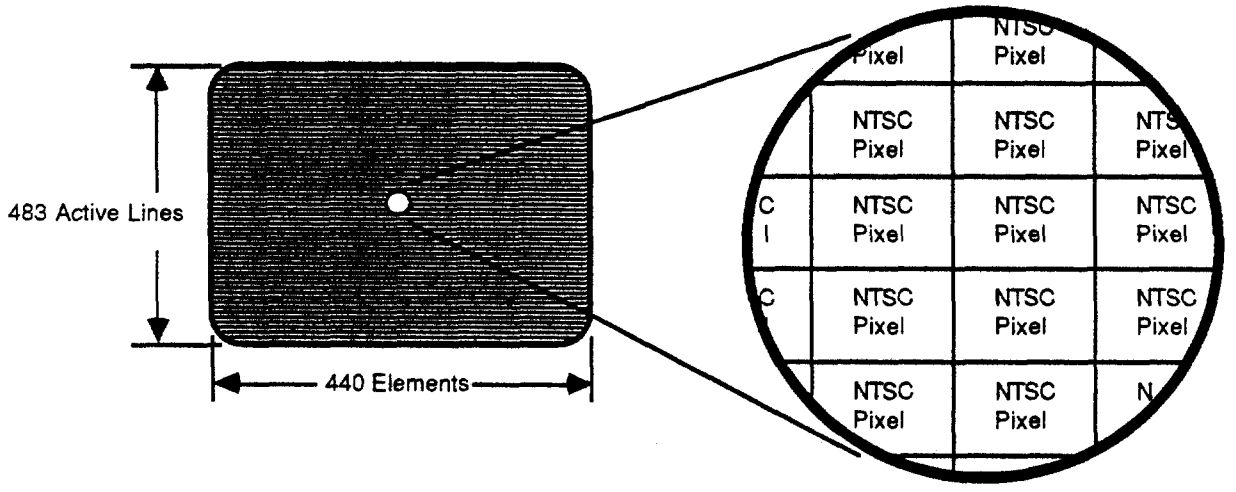

Figure 1: The NTSC Pixel

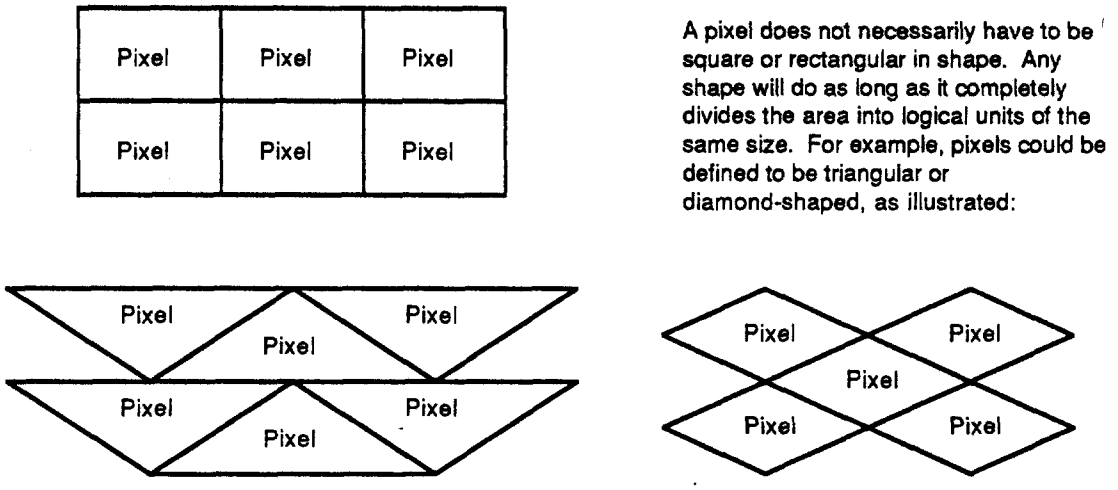

Figure 2: Alternative Pixel Shapes

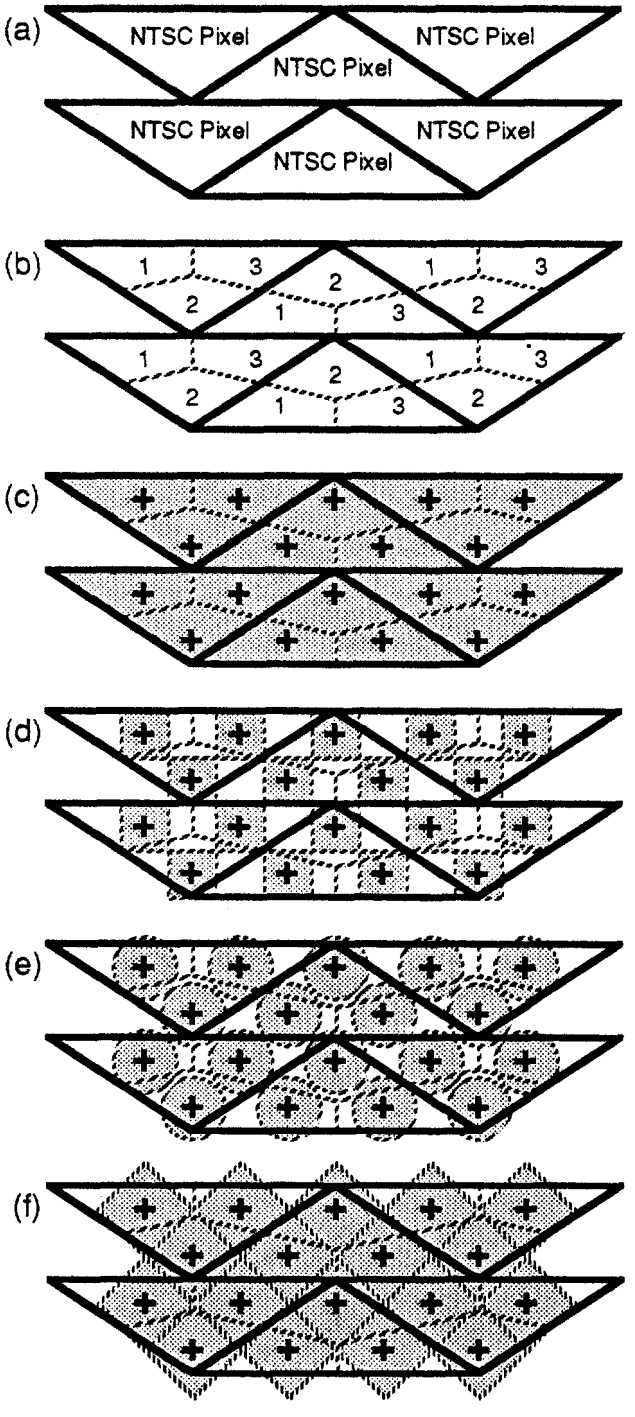

Here we have chosen the triangular pixel representation. There are 483 pixels within the vertical dimension of the TV screen, and for an assumed bandwidth of 4.2 Mhz there are about 440 pixels within the width of the screen. In total, about 213,000 pixels comprise the total NTSC picture.

The TriScan process divides the NTSC pixels further into smaller "Subpixels", labelled "1" , "2", and "3" at left. On the first scan, only the "1" portions are displayed, with the " 2" and "3" portions processed on the succeeding scans. Dividing the pixel into smaller areas by means of diagonal lines allows for increased resolution in both the horizontal and vertical directions.

The crosses at left represent the approximate centers of the subpixel areas for the purpose of creating a subpixel grid of equal spacing.
The physical representation of the two pixel areas does not necessarily have to be as an assembly of oddly-shaped quadrilaterals, as shown here. For example, the subpixels could be displayed as:

small rectangles or squares,

circles or ellipses,

or diamond-shaped areas.

Figure 3: The Subpixel Concept

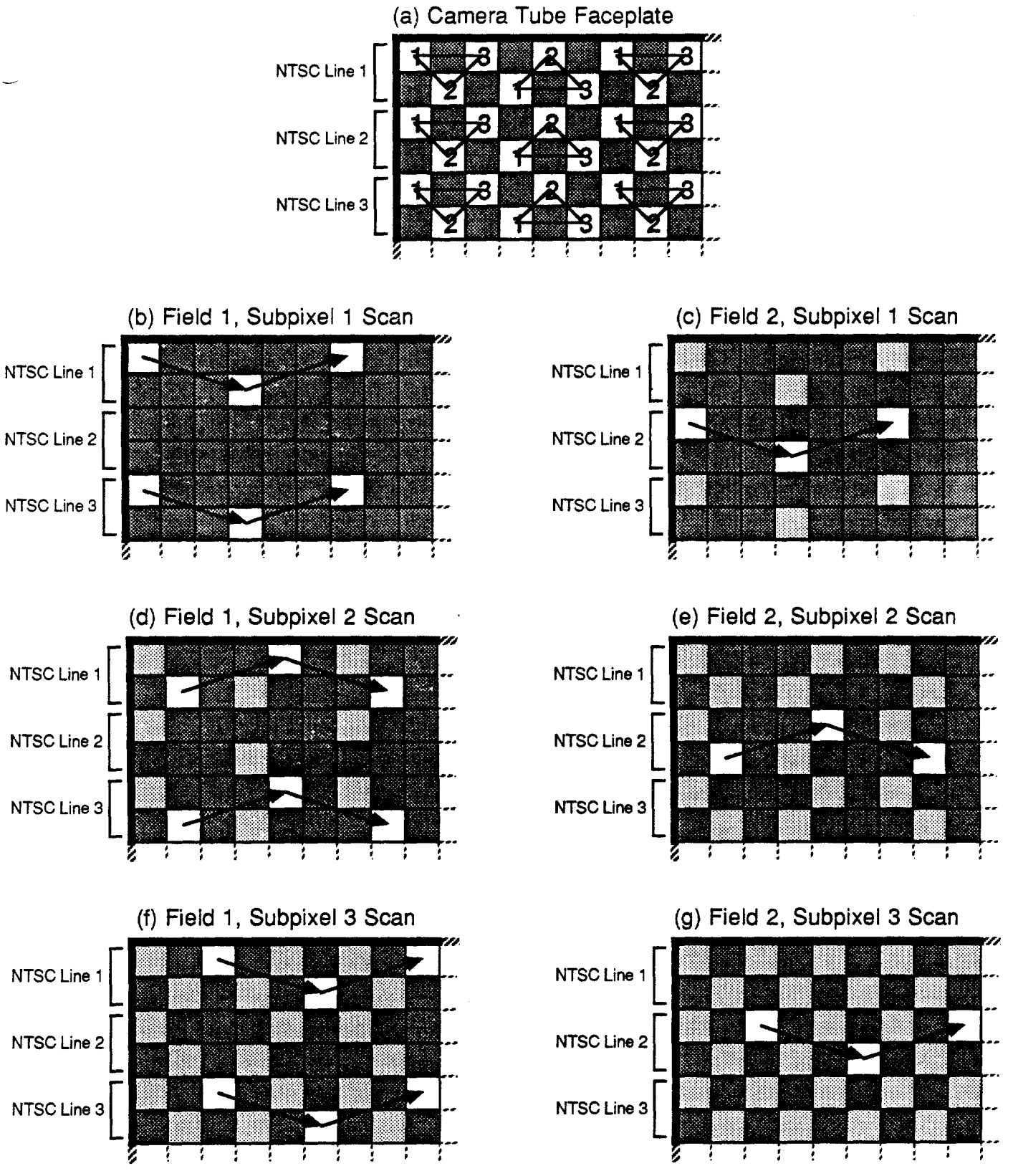

Figure 4: TriScan Scanning Pattern

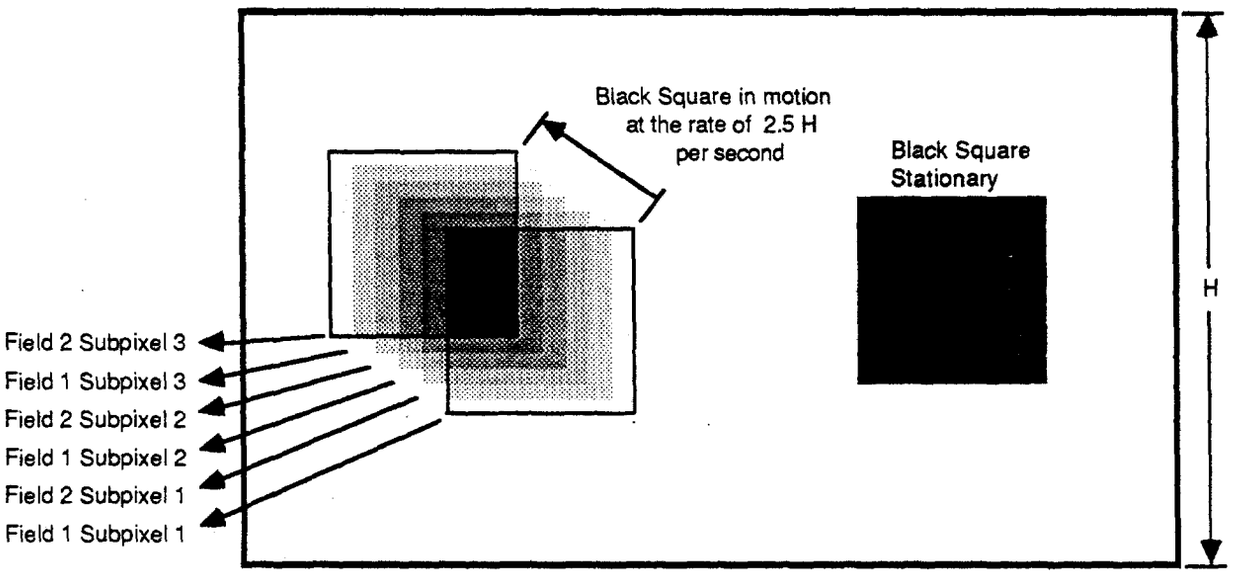

Figure 5: The TriScan Smear Defect

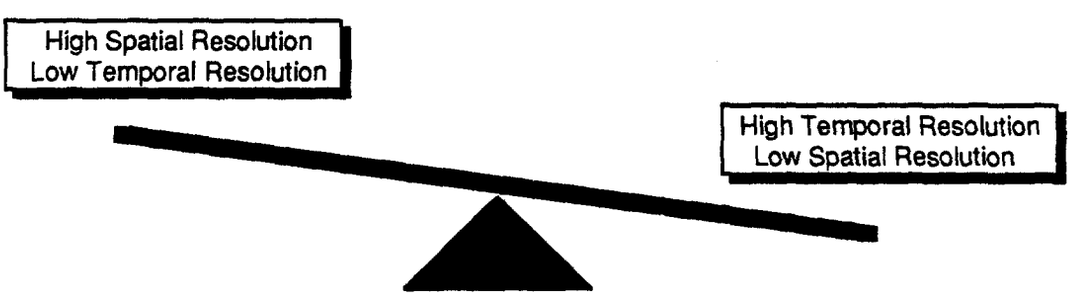

Figure 6: Dual-Resolution Processor Function

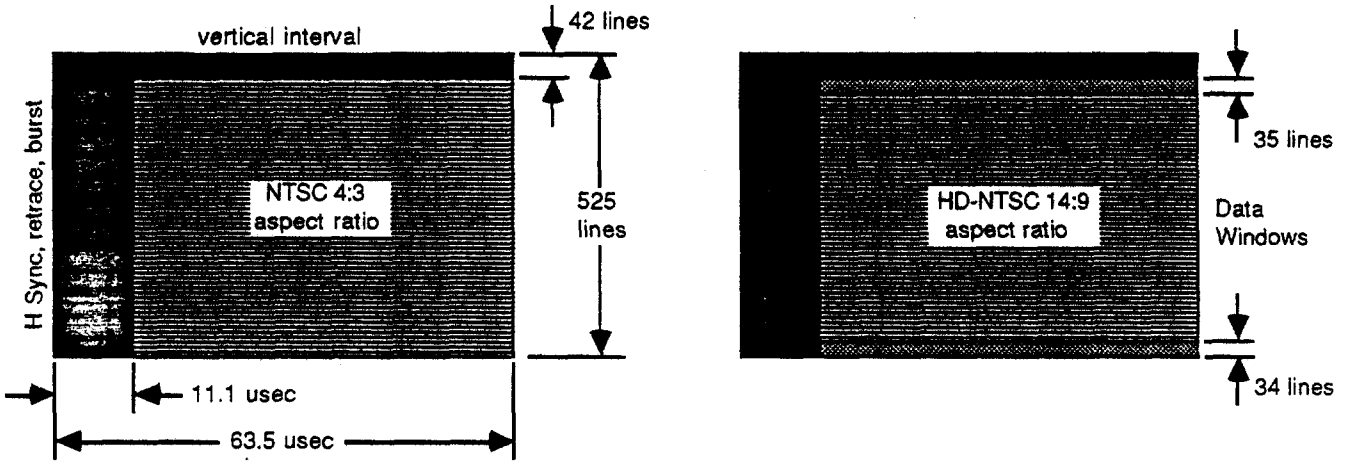

Figure 7: HD-NTSC Screen Format

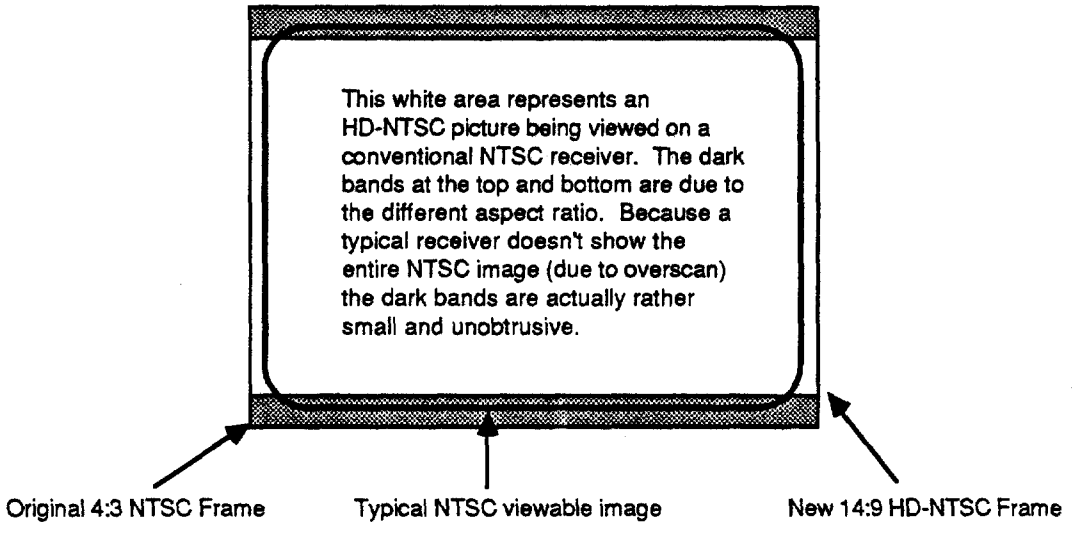

Figure 8: A 14:9 Aspect Ratio Viewed on an NTSC Receiver

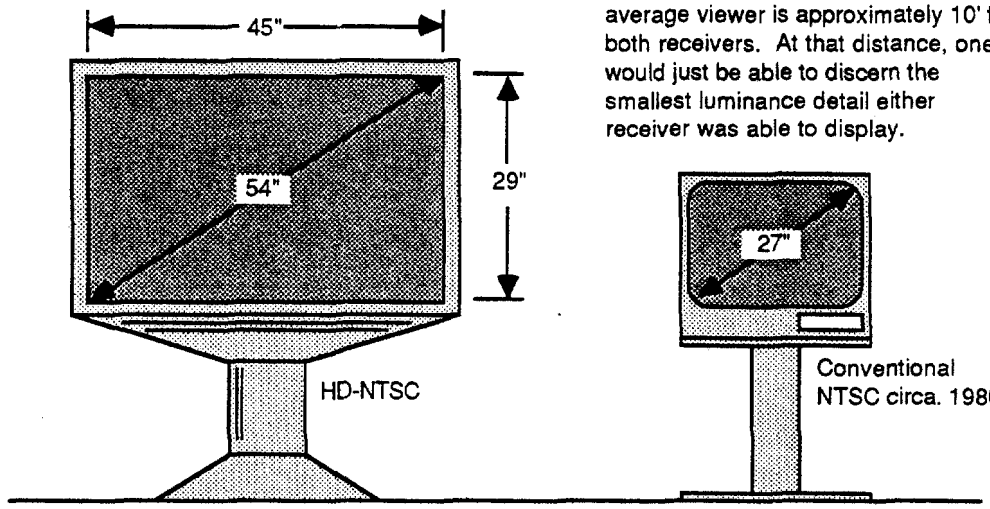

Optimum viewing distance* for the average viewer is approximately 10' for both receivers. At that distance, one would just be able to discern the smallest luminance detail either receiver was able to display.

Note: Although projection television receivers having a general size similar to the HD-NTSC receiver on the left are available today, picture quality is no better than conventional NTSC. The HD-NTSC receiver above left delivers about twice the vertical and horizontal resolution as its 1986 counterpart.

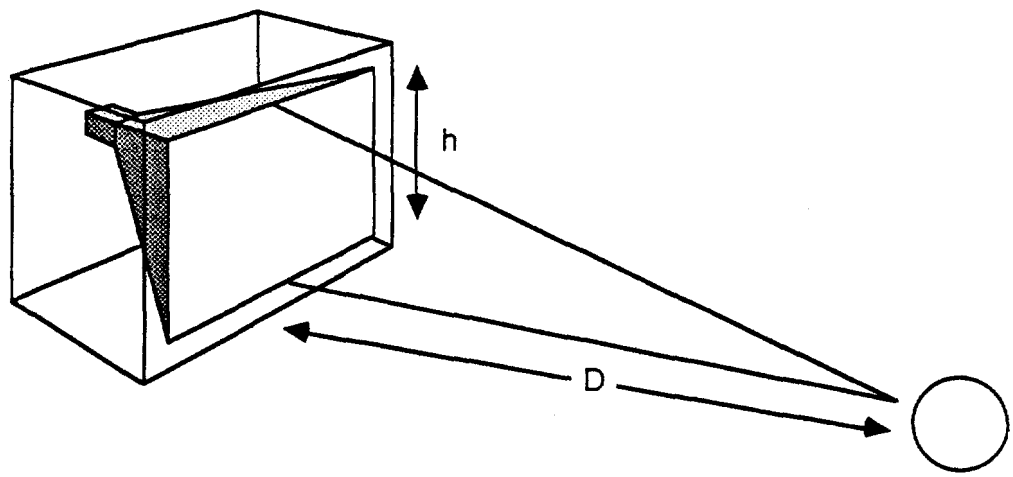

* according to the formula $N \approx \frac{2{,}290}{D/h}$

where: N = Number of lines resolvable on screen by viewer with average vision (1.5 min arc)
D = Viewing distance
h = Screen height

Figure 9: Proposed HD-NTSC Receiver Appearance (typical)

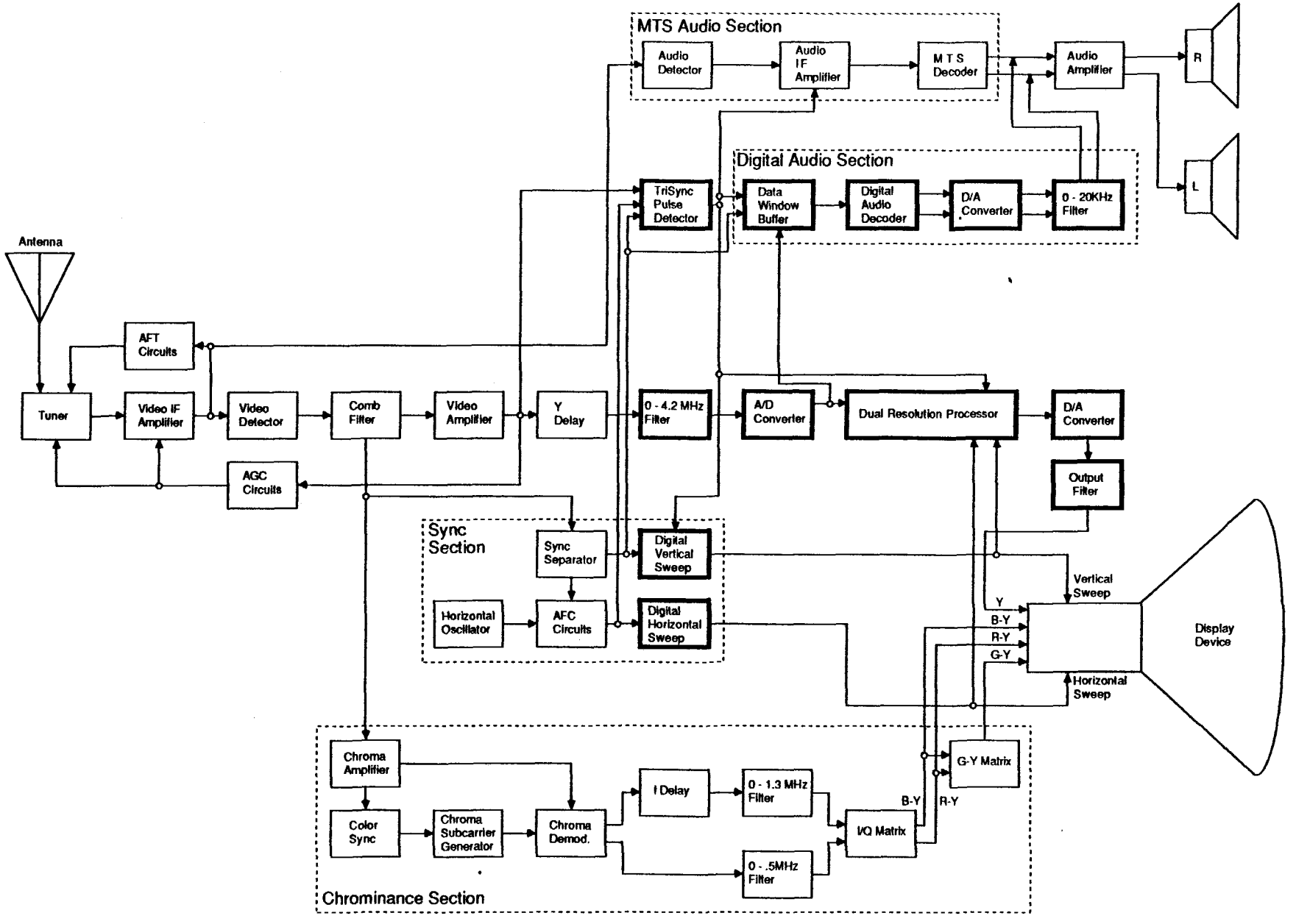

Figure 10: HD-NTSC Receiver Block Diagram

(a) Muse:

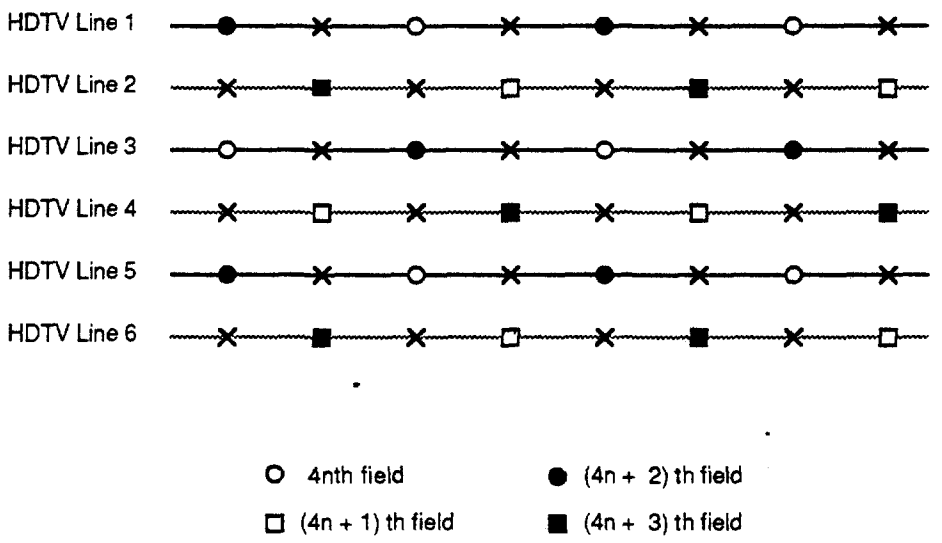

(b) HD-NTSC:

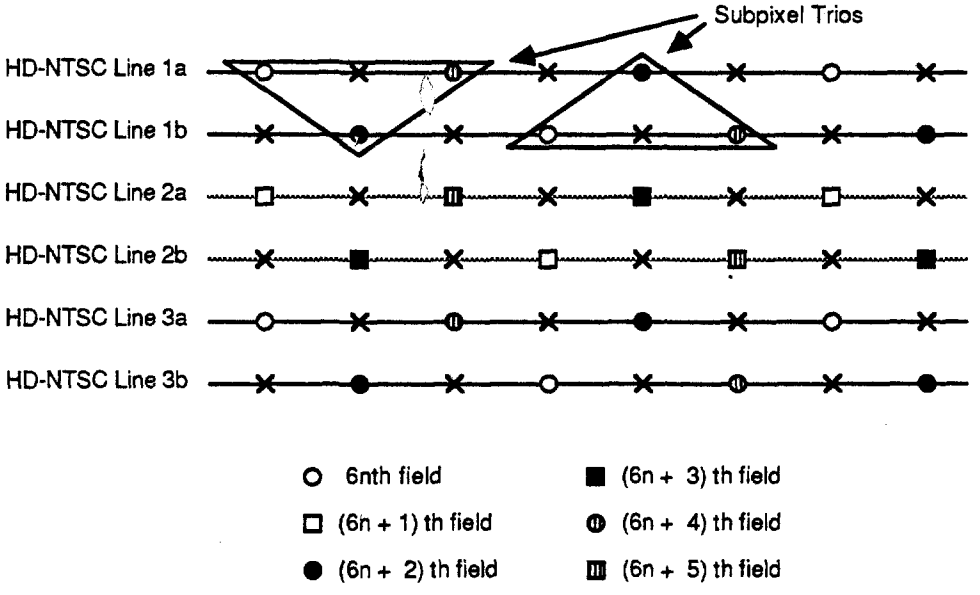

Figure 11: Subsampling Patterns for Muse and HD-NTSC

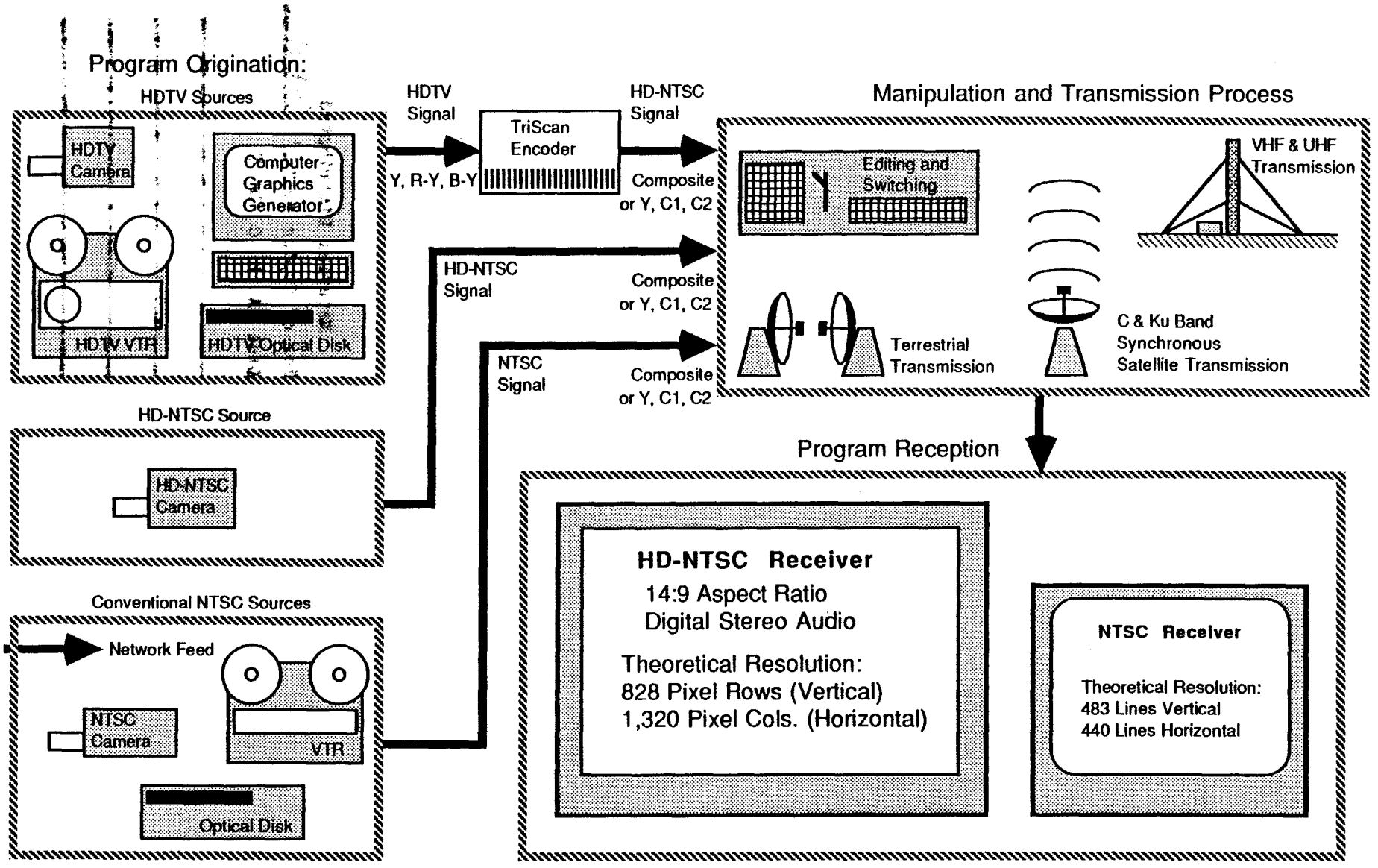

Figure 12: The HD-NTSC Process--A Conceptual View