RECEIVED
NOV 1 8 1987
Federal Communications Commission
Office of the Secretary

ORIGINAL FILE

A Comment for MM DOCKET No. 87-268 (Aug. 20, 1987)

" The Outliine of the EDTV EMPLEMENTING TECHNIQUES"

November 18, 1987

Nippon Television Network Corporation

14 Niban-cho, Chiyoda-ku, Tokyo, Japan

0+11

The Outline of the EDTV IMPLEMENTING TECHNIQUES

In response to the deliberation on EDTV in Broadcasting Technology Association (B.T.A.), Nippon Television Network Corporation (NTV) is currently conducting experiments on EDTV as described this paper. Of the ten implementing techniques deliberated by BTA, Y2, Y3, C1 and S1 have been recommended by us and correspond to the paragraphs marked with numbers in parenthses of this report.

Y2: Transmission of Detail Signal in Block Increments

Y3: Correction of Detail Signal Degradations due to Gamma-Correction at Transmission End

C1: Extended I Signal Bandwidth

S1: Detail Enhancement of dark area and S/N Enhancement through Adaptive Pre-emphasis

S. Sakuma

Sumihisa Sakuma
Executive Managing Director
Engineering & Technical Operations

1. Introduction

To cope with rising demands for higher picture quality of the existing on-ground broadcasts, due to the recent television receiver trend for higher picture quality levels and larger screen sizes, an EDTV (Extended Definition Television) committee has been formed under BTA (Broadcasting Technology Association) in Japan and is currently engaged in attempting to establish a standard system for Japan. The EDTV has drawn attention to a quality-enhanced television system that has been made compatible with the existing NTSC TV system, and the establishment of an appropriate standard system that is aimed at another smooth systems transition, similar to that implemented in the past when the B/W TV was phased over to the current color TV.

Since NTV not only has participated in the BTA deliberations, but has also been engaged in its own studies inclusive of various experiments, an outline of its relevant results is presented below.

2. Picture Quality Enhancing Factors and Targeted Enhancement Levels

Due to the prerequisite compatibility with the existing NTSC system, any approach to achieve a higher picture quality level has to be examined from both its effectiveness and interference standpoints.

Elements for consideration in the enhancement of picture quality include:

1. Enhanced Horizontal Luminance Resolution
2. Enhanced Vertical Luminance Resolution
3. Enhanced Color Resolution
4. Cross-Color and Cross-Luminance Rejection
5. Enhanced S/N Ratio
6. Ghost Rejection

and some other items, included in NTV's current studies of the items shown in Table 1 as by-factor picture quality enhancing techniques (enhancement implementing techniques).

In the study, picture quality enhancement targets have been subjectively accessed at ranks 1.5 to 2, in view of the compatibility aspect, technical background, cost and other elements like feasibility. The setting is judged from a sum total of all the factors, and reflects receiver parameters of circa a 30-inch screen size and a 4H (four times the screen height) viewing distance.

3. An Outline of Implementing Techniques

1) Transmission of Detail Signal in Block Increments (Y2)

For the transmission of detail signal ranging from 4.2MHz to 5.6MHz, the image frame has been divided into numerous tiny blocks, and the transmission arranged in block increments via a separate channel in order of priority assigned to the blocks, while at the receiving end, these high detail signal will be added on to the

luminance components received through a normal signal channel for playback purposes.

The block sizes have been made 4 x 4, 3 x 6, 3 x 8, etc. in terms of pixel count (number of picture elements) for the transmission of a digital code for the detail signal data of 5 to 10% of the blocks, with the block address data added on, in order of priority, that has been assigned in accordance with the detail signal content of each individual block. Preliminary tests have revealed transmission of 5 to 10% of the entire high band block data to be sufficient for the playback of images reasonably close to the original, but before commercialization, further reviews will be required in order to consider the applicable transmission line capacity.

The transmission line capacity required for the above is estimated at several hundred K b/s, and a number of candidate systems are currently under review to serve as the transmission line. One of such systems employs the amplitude modulation along an axis orthogonal to the TV signal, and another the frequency multiplexing onto luminance signal that has been frequency-interleaved with the TV signal, to cite but a couple of the major candidate systems.

2) Correction of Detail Signal Degradations due to Gamma-Correction at Transmission End (Y3)

For the existing NTSC system, pre-corrections of gamma at the transmitting end have been employed to accommodate the characteristics of CRTs at the receiving end. For this purpose, corrections are first made at the stage of primary RGB color signals, and then the signals are matrixed into the Y, I, and Q signals, after which the I and Q signals are further band-limited to within 1.5MHz and 0.5MHz respectively, for the NTSC encoding. In the process, however, constant luminance principles are overpowered by the passage of signals through non-linear circuits before entering the matrixing circuit. It is for this reason that detail signals to be carried by chrominance signals sometimes fail to be transmitted.

Fig. 1 shows the interrelation of Y' versus $Y^{1/}$, and reveals the greater seriousness of the above situation with increasingly higher color saturation, resulting in lowered detail signal levels under the influence of band-limited I and Q signals, and consequently, in insufficient resolution capabilities.

One example of an approach for correcting the above deficit is shown in Fig. 2. It generates a gamma-corrected version of the Y signal that has been acquired by matrixing pre-gamma-correction RGB signals, and with the new version Y signal, corrects the actual luminance signal.

Other correction processes are also possible, but our experiments have been carried out with a process to be presented later, in view of the relevant circuit scale, correction accuracy, cost, and stability.

3) Higher Resolution Processing at Camera End

With the currently employed NTSC camera, any higher vertical resolution is difficult to achieve, due to the large beam diameter and other influencing factors. Therefore a system has been conceived that employs sequentially a scanning camera and converts its signals into an NTSC interlace signal, and by this process, appropriate filterings for the rejection of fold-back components generated by the conversion processing. It will be possible to provide other measures offering the potential for enhanced capabilities for overall vertical resolution in conjunction with the already high resolution of the main unit camera.

4) Non-Interlace Scanning Processing at Receiving End

By incorporating a frame memory unit in the receiver, a 3-dimensional Y/C separation filter may be possible, offering the potential of getting rid of not only the cross-color and cross-luminance interferences that have most severely plagued the existing NTSC system, but also line flicker interferences through the progressive scanning. As the IDTV (Improved Definition TV) techniques,

this approach is already being researched by many TV receiver manufacturers, and may even be regarded to have reached a commercializable technical level, reportedly for the near future marketing start of IDTV receivers.

5) Extended I Signal Bandwidth (C1)

The NTSC system limits its I and Q signal bandwidth within 1.5MHz and 0.5MHz respectively, but when confronted with the images often encountered in the latest CG (Computer Graphics) field, employing reds on a blue ground or other colors not significantly differing in brightness, it blurs the boundary of such colors. These colors in actual use are often closely linked to the I signal. Accordingly, an approach is envisaged to extend the current I signal bandwidth to the limits of its compatibility assurance. According to our experiments, when the existing chrominance signal modulation process is left intact, and the I signal bandwidth is extended close to 2MHz, the increase in interference is slight. In addition, such modifications are simple to implement merely by altering the I signal filter parameters.

6) Detail Enhancement of dark area and S/N Enhancement through Adaptive Pre-emphasis (S1)

For frequency modulation (FM) equipment, the S/N enhancing techniques through pre- and de-emphases are

frequently employed, but for the current amplitude modulated TV system, such techniques are difficult to apply as they are at present.

Adaptive pre-emphasis places emphasis on high frequency signal of luminance components in accordance with the video signal level, by raising the high frequency signal of luminance component emphasis in a low luminance signal level mode, and lowering it in a high luminance signal level mode. This process makes possible pre-emphasis devoid of overmodulations.

Higher luminance capabilities have been achieved for the picture tube of latest TV receivers, not only has its gamma value been raised but indoor illuminances have also been made lighter, and because of these factors combined together, details of the dark area of an image have substantially deteriorated. Adaptive pre-emphasis offsets the deterioration and improves the quality of images. De-emphasis is also carried out at the receiving end and, therefore, is effective for improving S/N ratio.

4. Configuration of Experimental System

At NTV, after due review of the above implementing techniques and relevant basic experiments, we have contrived the experimental system shown in Fig. 3, and are currently engaged in on-going experiments for the judgement of effectiveness and interferences by focusing on subjective assessments, the setting of various parameters, and other factors.

Next, each individual part of the system is discussed below.

1) Interlace Scanning Camera

This is a model SK-110 camera made by Hitachi that has been employed at our studios as the typical camera.

2) Non-Interlace Scanning Camera

This is an Ikegami-made camera developed to serve the 1,125-line HDTV that has subsequently been modified to serve a 525-line progressive scan system. Equipped with a 1-inch pickup tube, the camera serves either the HDTV or a 525-line progressive scan system whichever is preferred, through the switch-over of the LSIs in its scanning and other blocks.

3) Down Converter

This is a down converter for which a frame memory unit has been employed, and enables switching the 6.0MHz and 4.2MHz luminance signal bandwidth from one to the other.

4) Circuit for Detail Signal Correction due to Gamma-Correction at Transmission End

This is a trial built unit in the Fig. 4 configuration. It is intended for the adaptive control of luminance signal corrections in accordance with the I and Q levels.

5) Adaptive Pre-emphasis

The basic configuration of a trial built circuit is shown in Fig. 5. It provides the pre-emphasis of an adaptively variable magnitude dependent on the amplitude of lower frequency component of a luminance signal to be transmitted, and its emphasis magnitude versus luminance component interrelations have been made as follows:

$$Y = Y\{(1 - K) + P(f)K\}$$

where K is a factor varied by the amplitude of luminance signal components lower than f1 in frequency, and its response is shown in Fig. 6. The pre-emphasis response climbs beyond frequency f2 on a 6db/oct slope. For our experiments, we have set K at 0 to 1, f1 at 500kHz to 1MHz, and f2 at 1MHz to 2MHz. Fig 7 shows the hardware configuration.

6) Color Encoder

This is an average NTSC encoder whose I filter has been modified to transmit frequencies up to 2MHz.

7) Up Converter

This is an interlace to non-intedrlace scan converter in which a 3-dimensional Y/C separation filter has been formed by the use of a frame memory unit, and performs inter-frame and inter-field interpolations by modally adaptive processing.

8) De-emphasis

This de-emphasis performs at a 525-line non-interlace signal level, and its circuit has been formed similarly to 5) Pre-emphasis, but its polarities have been reversed to serve de-emphasis purposes. To achieve valid configurations, it incorporates matrix circuits at its front and rear ends.

9) Others

In addition to a non-interlace scanning monitor, a signal generator, handy transmitter, TV tuner, and commercially available TV receivers of various manufacturers' have been made available for the experiments. Furthermore, an imaging memory unit for software-generated still images simulating purposes, personal computer, and other equipment have also been used.

5. Experiment Results

Initially for basic evaluation test purposes, experiments were carried out to evaluate the effect of a modified luminance signal bandwidth, modified chrominance signal bandwidth, non-interlace scanning conversion, and other measures. Evaluation was made by seven specialist engineers resulting in the seven grades shown in Table 2. For the evaluation image, four pictures shown in Photo 1 were used, and their average evaluation marks are shown in Fig. 8.

The following observations have emerged from the evaluation tests:

1) The non-interlace scanning conversion brings about 0.5 to 1 rank higher evaluation marks.
2) The effect of an extended luminance signal bandwidth is somewhat smaller than that of an extended chrominance signal bandwidth.
3) The rejection of cross-color, cross-luminance, and other NTSC interferences brings about 0.5 to 1 rank higher evaluation marks.

For correction of detail signal degradations due to Gamma-correction at transmission end related experiments, multiburst signals at 100% color saturation and 80% original signal level have been generated with software in advance, for each of the RGB colors. Photo 2 shows the waveform of their luminance components.

Experiments which have been carried out are for waveform checks and monitored image evaluations for which the above test signals were employed, and general images have been the subjectively assessed. Photo 3 shows the test signal waveform before and after the R output-related correction. It reveals the correction exercised on high frequency component amplitudes. The extent of corrections has been even further accentuated with G and B that exhibit higher $Y'/Y^{1/}$ ratios. Photo 4 gives examples of general images of a still picture.

At the Japanese standard establishing deliberations at EDTV, numerous other enhancement implementing techniques other than our own have been proposed. They include the multiplexing of detail signal onto the chrominance signal region ("Conjugate" by Hitachi), transmission of detail signal through field offset subsamplings (NHK), field sequential transmission of high frequency chrominance signal components (NHK), and detail correction by a number of organizations amongst others. Presently, BTA is engaged in diverse analyses that cover not only the effectiveness and interference assessments of such proposals, but also their interrelation with existing broadcasting systems, their costs, problems in the manufacture of their receivers, and many others. If progress continues smoothly, a standard will probably be established no later than in 1988 and EDTV broadcasts started around 1989.

Table 1: Individual Enhancement Factor Implementing Techniques

Enhancement Factor	Implementing Technique
Horizontal Luminance Resolution Enhancement	Transmission in Block Increments of Detail Signal
	Correction of Detail Signal Degradations due to Gamma-Correction at Transmitting End (Detail Signal Correction)
Vertical Luminance Resolution Enhancement	Non-Interlace Scanning Camera and other measures for Higher Resolution at Camera End
Color Resolution Enhancement	I Signal Bandwidth Extension
Cross-Color and Cross-Luminance Rejection	Non-Interlace Scanning Conversion at Receiving End
S/N Enhancement	S/N Enhancement through Adaptive Pre-emphasis
Ghost Rejection	Ghost Cancellation with Ghost Cancelor-dedicated Signals

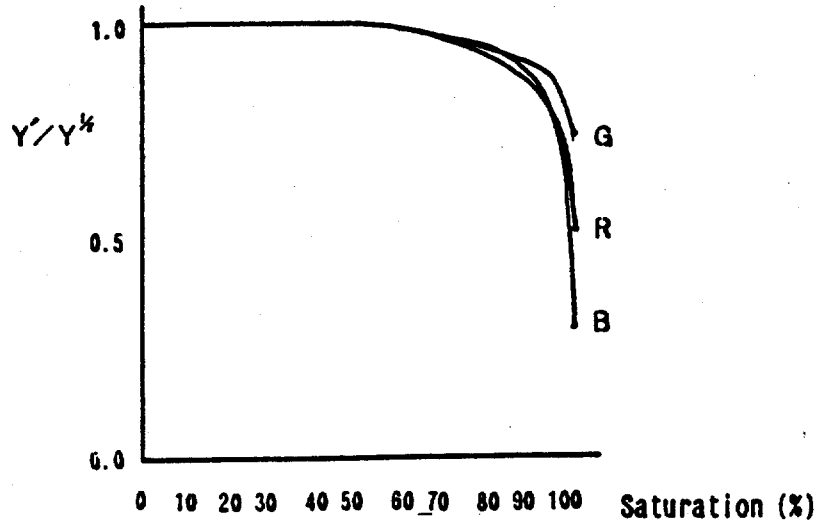

Fig.1 Inter relation of $Y'/Y^{1/\gamma}$ versus color saturation.

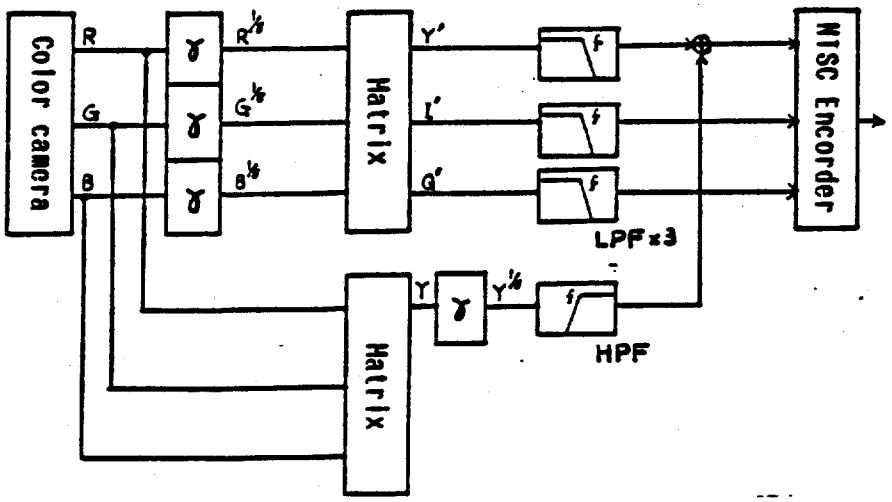

Fig.2 An example of an approach for Detail Signal Correction.

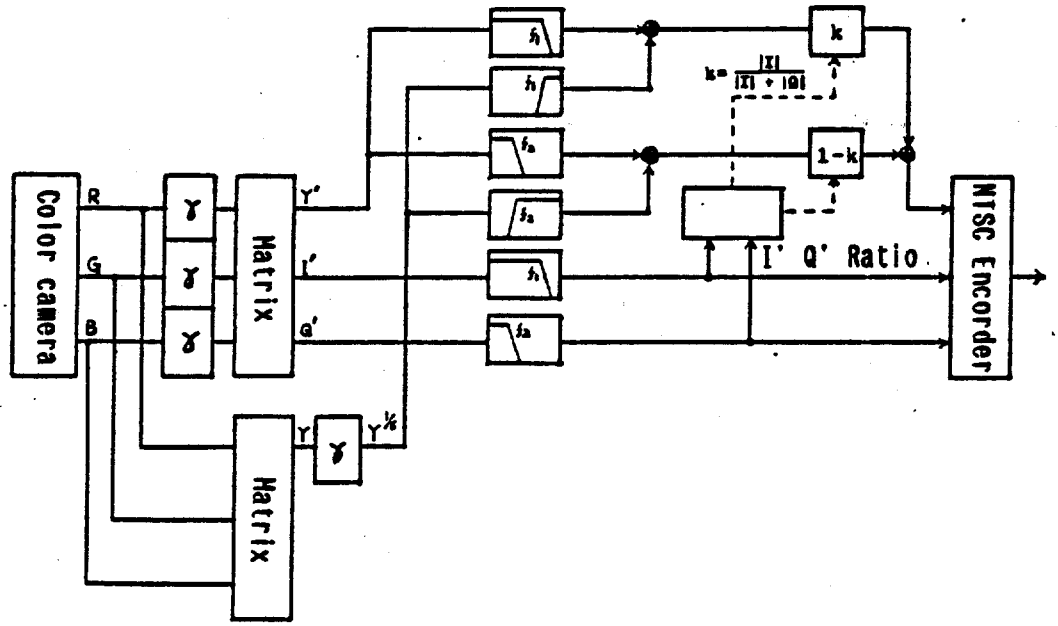

Fig.4 Configulation of Detail Signal Correction Circuit.

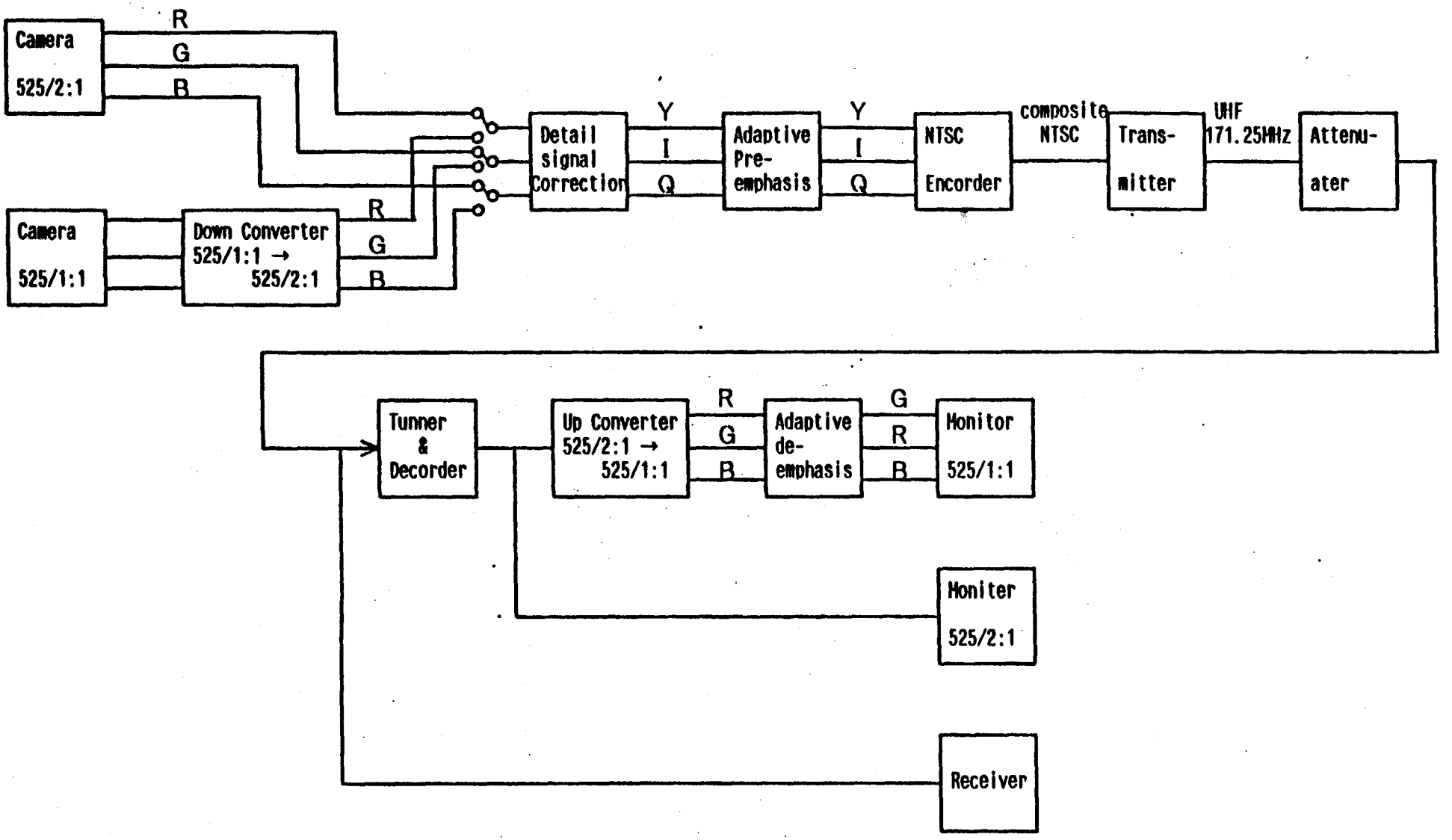

Fig. 3 Configuration of Experimental System

Y.A.

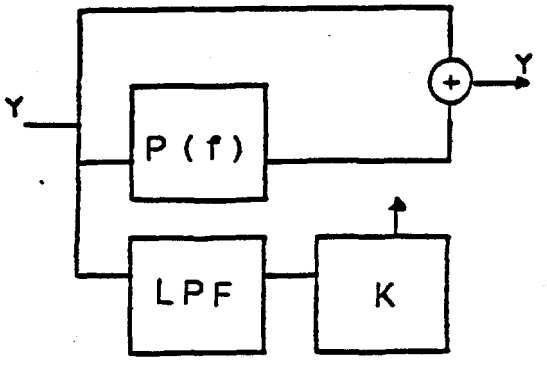

Fig.5 Basic configuration of Adaptive Pre-emphasis.

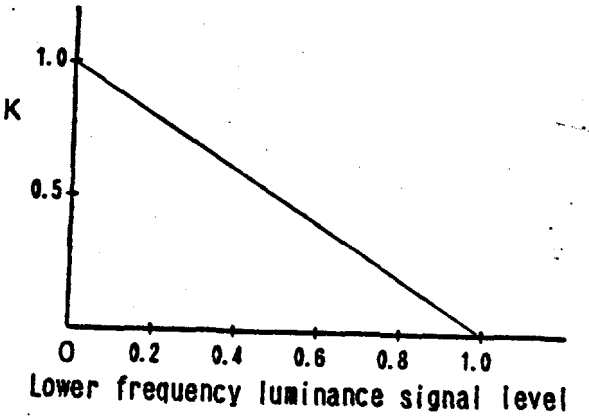

Fig.6 Inter relation of K v.s lower frequency luminance signal level.

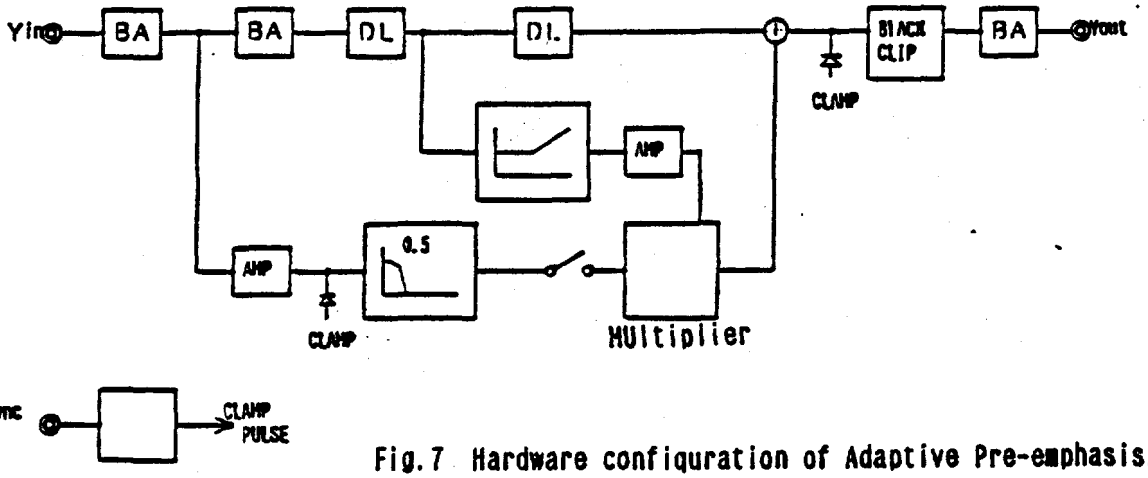

Fig.7 Hardware configuration of Adaptive Pre-emphasis.

+3	Much better
+2	Better
+1	Slightly better
0	The same
-1	Sligtly worse
-2	Worse
-3	Much worse

Table 2 Seven-grade comparison scale.

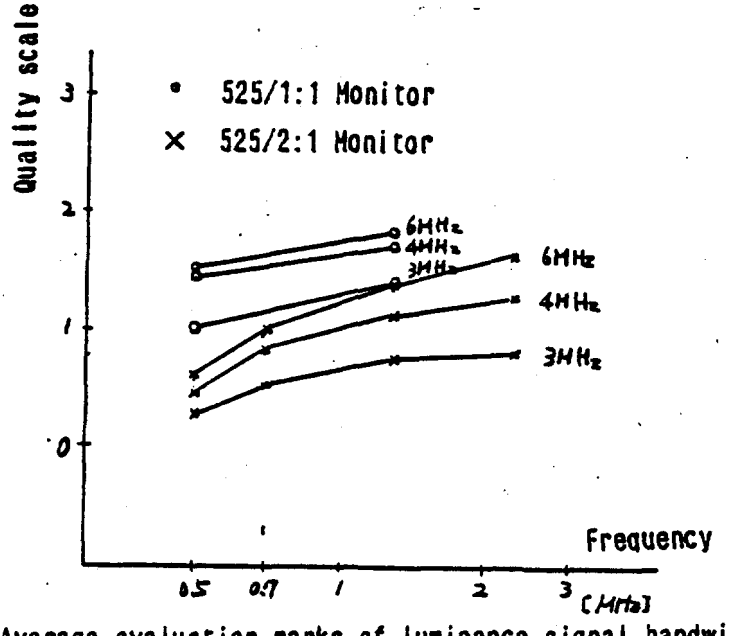

Fig.8 Average evaluation marks of luminance signal bandwidth and chrominanice signal bandwidth.

Y.Araki

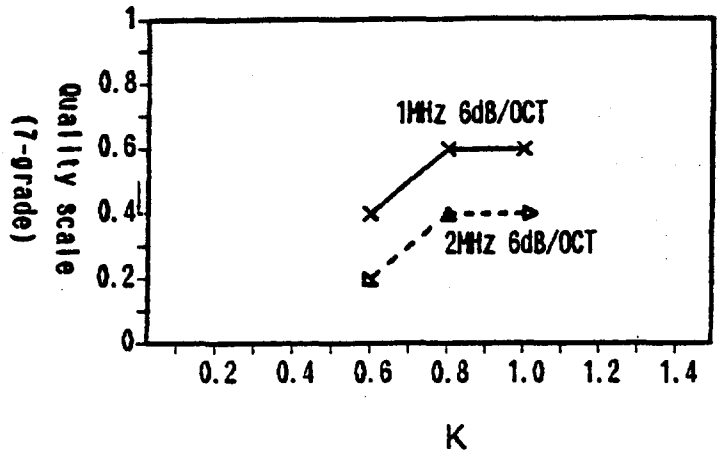

Fig.9 Subjectively assessed results under the varying individual parameters.

IRE(%)	LPF	Before emphasis(dB)	After de-emphasis(dB)	Enhanced S/N (dB)
100	TRH	43.5	43.5	0
	4M	44.2	44.1	-0.1
50	TRH	43.3	44.6	1.3
	4M	43.9	45.1	1.2
0	TRH	43.3	46.2	2.9
	4M	43.9	46.6	2.7

Table 3 Results of enhanced S/N ratio by Adaptive Emphasis

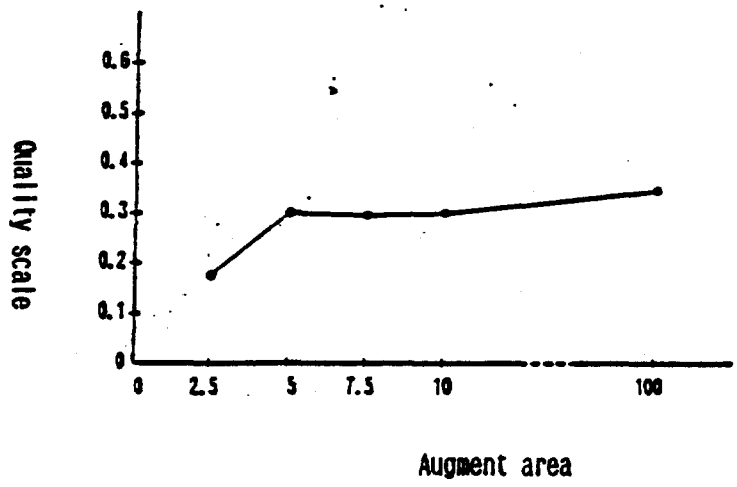

Fig.10 Argmented area v.s assessment value of Transmission in block increments.

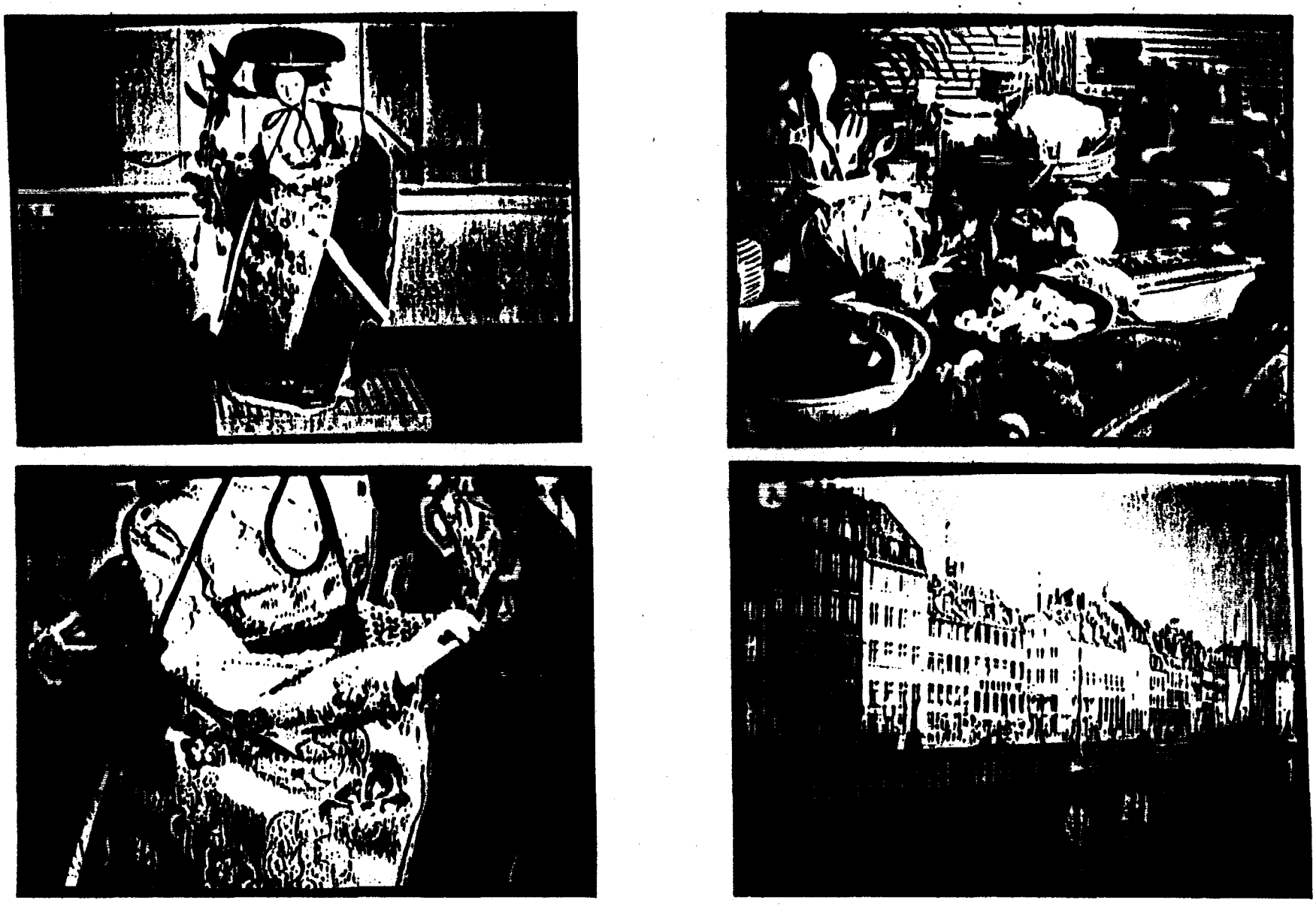

Photo 1 Four pictures for the evaluation.

Y. Araki

(Printing in B&W i).K)

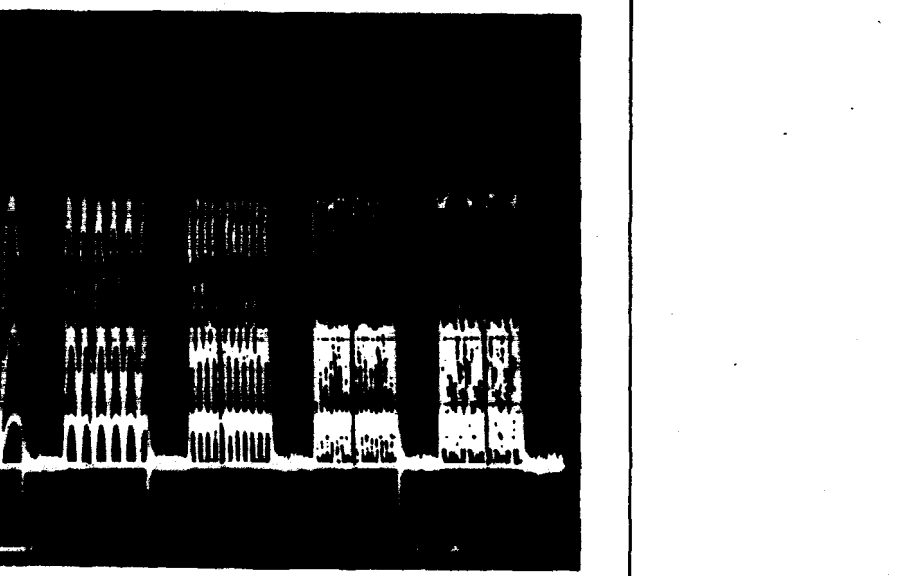

Photo 2 Waveforms of luminance components
of original multiburst test signal.
(R,G,B from above, and 0.5, 1, 2, 3, 4MHz from left side)

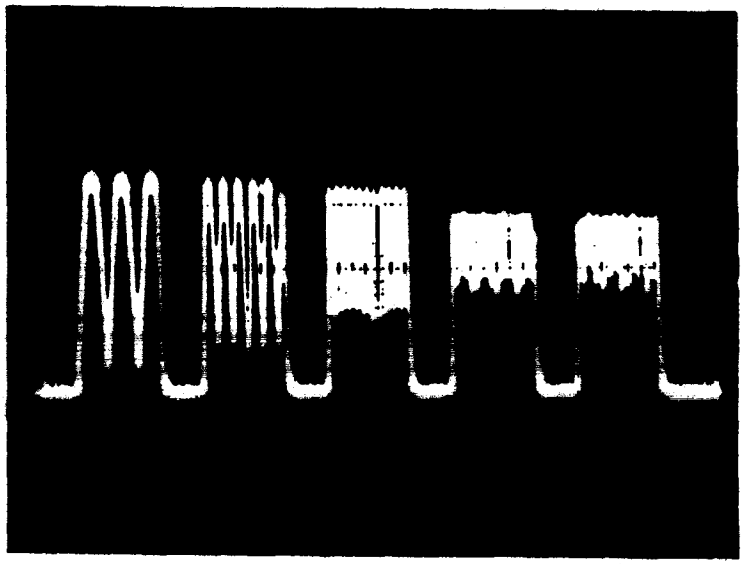

a. before correction

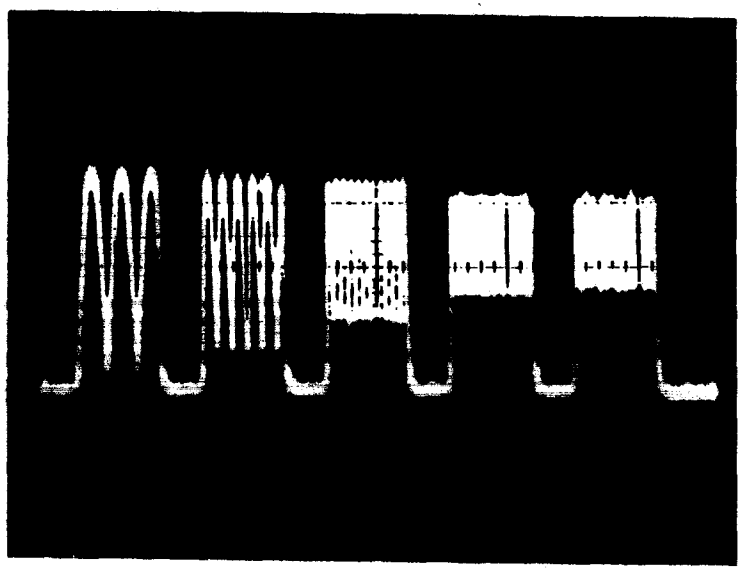

b. after correction

Photo 3 Test signal waveform before and after corection. (R)

a. before correction

b. after correction

Photo 4 Examples of general images of a still picture.

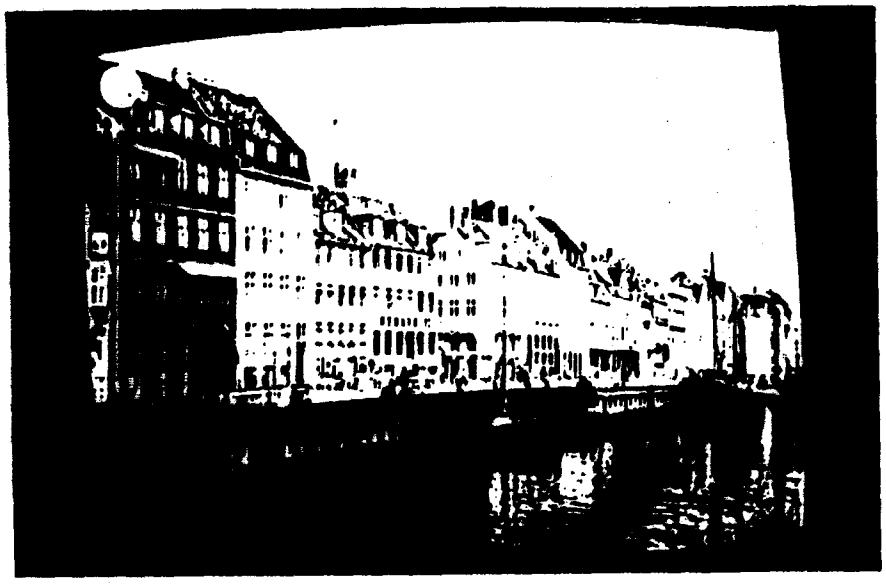

a. before correction

b. after correction

Photo 5 Test images of Adaptive pre-emphasis.

Y. Araki

Relative to adaptive emphasis, picture quality enhancement-related subjective assessments and S/N enhancement-related measurements were made. Photo 5 shows examples test images used for the former. On the left is the before-correction image, and on the right the after-correction.

Fig. 9 gives the subjectively assessed results under the varying individual parameters. Enhancements in the order of 0.3 are evident, even for average images.

For the measurement of enhanced S/N ratios after de-emphasized, the commonly used video noise meter was employed. Table 3 shows the results thereof.

The I signal band extension was effective on some images but not on others. About 0.3 higher evaluation marks resulted on the former.

For the transmission in block increments of detail signal, experiments focused on software processed still images. The augmented area versus assessment value (evaluation marks) interrelation relative to detail signal at 4.2MHz to 5.6MHz is shown in Fig. 10.

6. Afterword

The experiments carried out so far have underlined our confidence in achieving the effectiveness closely approximating the original target levels by a combination of the individual enhancement implementing techniques presented above. We plan to continue our studies with an even broader range of experiments in the future.