Before the
Federal Communications Commission
Washington, D.C. 20554

RECEIVED
NOV 30 1988
Federal Communications Commission
Office of the Secretary

In the Matter of	)	
	)	
Advanced Television Systems and Their Impact on the Existing Television Broadcast Service	)	
	)	
Review of Technical and Operational Requirements: Part 73-E, Television Broadcast Stations	)	MM Docket No. 87-268
	)	
Reevaluation of the UHF Television Channel and Distance Separation Requirements of Part 73 of the Commission's Rules	)	

To: The Commission

COMMENTS OF CAPITAL CITIES/ABC, INC.

Capital Cities/ABC, Inc.
1330 Avenue of the Americas
New York, NY 10019

Sam Antar
Vice President, Law & Regulation

Counsel for Capital Cities/ABC, Inc.

November 30, 1988

0+5

Before the
Federal Communications Commission
Washington, D.C. 20554

RECEIVED
NOV 30 1988
Federal Communications Commission
Office of the Secretary

In the Matter of	)	
	)	
Advanced Television Systems and Their Impact on the Existing Television Broadcast Service	)	
	)	
Review of Technical and Operational Requirements: Part 73-E, Television Broadcast Stations	)	MM Docket No. 87-268
	)	
Reevaluation of the UHF Television Channel and Distance Separation Requirements of Part 73 of the Commission's Rules	)	

Introduction and Comment on Tentative Findings

We believe that the Tentative Decision represents an ambitious and commendable effort by the Commission to further define the issues and narrow the seemingly limitless options for giving regulatory direction to ATV development. Except for tentative conclusion 3 that only currently allocated broadcast spectrum be made available for ATV, we are in agreement with the Commission's tentative findings. We endorse the Commission's recognition of the compelling need as a matter of sound public policy to preserve the existing local broadcasting system which provides a unique service to the American public and its conclusion to permit existing broadcasters to implement ATV.

We disagree with tentative conclusion 3 because we believe it is premature to discard spectrum options before propagation testing. As we will more fully explore below in our comments on spectrum availability, at the present stage of technical development there is reason to doubt whether sufficient spectrum for ATV can be found within the currently allocated broadcast bands. Although we recognize the legitimacy of the needs of other spectrum users and the general belief that microwave frequencies may not be as readily

adaptable to ATV as broadcast spectrum, we also submit that if testing demonstrates that the broadcast bands are insufficient, the microwave frequencies should be evaluated as an option. Therefore, we believe that the Advanced Television Test Center (ATTC) was correct in deciding to include spectrum above 1Ghz in its propagation testing now being conducted and we would urge the Commission to defer any spectrum decision until at least those tests can be completed and the results analyzed.

Advisory Committee Interim Report

In general, we support the conclusions of the Interim Report. However, one aspect of the report deserves comment here in light of the tentative findings in the Tentative Decision.

The Interim Report, in section 3.1 on ATV attributes, adopts the proposed 1125/60 production standard as a reference point for comparing proponent system attributes. While this treatment is an understandable response to the need for objective yardsticks, it also tends to bolster the status of 1125/60 as an ATV standard. Although the Tentative Decision declares product standardization outside the scope of this inquiry, nevertheless it concludes that compatibility with 1125/60 is relevant to the likely success of specific systems. We disagree. In our judgment, any reliance on 1125/60 as a standard is misplaced because it is not NTSC-friendly, and it has not been demonstrated to be feasible, much less cost-effective, to convert 1125/60 in real time to NTSC.*/ Real-time

---

*/ See publication of the HDTV 1125/60 Group entitled "Why a 60-Field HDTV Production System in a 59.94 Field Environment?" which concedes that real-time conversion has not yet been accomplished (HDTV Production Series No. 3, dated June 1988). The United States is on record with CCIR that real-time conversion must be demonstrated by exhaustive tests in order for a system to qualify as an HDTV studio standard. See CCIR document 11/166-E (2 November 1987). Although 1125/60 is treated in this document as having met the criterion, in fact it has not done so.

conversion is crucial because it is necessary for live broadcasting. We are attaching as Exhibit A to these comments an analysis by Capital Cities/ABC engineer Michael D. Davis, on the shortcomings of 1125/60 as an ATV standard. For the reasons stated above and further elaborated in Mr. Davis' comments, we believe that compatibility with 1125/60 should be considered irrelevant to the evaluation of proponent systems.

Proposed ATV Systems

In its discussion of proponent systems, the Commission examines salient characteristics such as NTSC-compatibility, spectrum requirements, improvements in resolution and extended aspect ratio. There is another key characteristic which is relevant to the comparison of systems - predicted success in noise reduction and ghost cancellation. Without major improvements in these areas, the benefits of improved resolution will not be received in full in the home and it is questionable whether ATV will be perceived by the consumer as sufficient to warrant the incremental cost for new equipment. It is also true that the current state of display technology severely limits the attractiveness of ATV because of the limited brightness of available high resolution displays. As a result of these factors, seemingly large qualitative differences, either between NTSC and ATV, or between different ATV systems, may be insignificant to the home viewer. Therefore, success in addressing noise and ghost problems and thus preserving the improved quality of ATV should be accorded significant weight in evaluating competing systems. And the current limitations of display technology must also be borne in mind in making relative comparisons and policy judgments.

Spectrum Availability

The Commission's tentative conclusion to allot supplemental spectrum only within the existing television allocation is based on the two conditions that 1) UHF taboos can be disregarded in the ATV environment and, 2) the geographical separation now required between

co-channel and adjacent channel assignments can be substantially reduced. The conclusion is based on preliminary studies by Working Party 3 of the Planning Subcommittee of the Advisory Committee and on studies conducted by the FCC Office of Engineering and Technology. We believe that a great deal more testing will be required before it is possible to make a reliable judgment that ATV can be designed to function under these conditions. In order to assist the Commission in its further spectrum evaluation, we are attaching as Exhibit B to these comments an analysis of the VHF High Band by A.G. Uyttendaele, Capital Cities/ ABC's Director of Allocations and R.F. Systems, which illustrates how drastically protection ratios would be reduced under the posited conditions. Mr. Uyttendaele concludes that coverage areas may well be reduced well below acceptable limits unless 1) the NTSC signal and the ATV supplemental or simulcast signal are spectrum compatible, 2) the ATV signal causes approximately 30dB less interference to the NTSC signals and, 3) the receiver for the ATV signal is immune to interference caused by the NTSC signal.

Spectrum Assignment Options

We believe it is premature to decide on spectrum allotment until the options outlined in the Tentative Decision are subjected to propagation testing using actual ATV systems. Forcing a decision at this stage assumes that each of the options is equally feasible, a proposition which may turn out to be incorrect. Testing may rule out some options or enable the Commission to establish priorities among options according to their relative feasibility. We believe that the delay required to conduct tests and evaluate their results is more than outweighed by the greatly increased likelihood that the Commission will reach a sound decision with the additional facts testing will uncover. Reaching a sound decision on spectrum allotment is of crucial importance. Not only will the decision irrevocably alter the positions of thousands of private parties in the fields of broadcasting, cable and consumer electronics

manufacturing, but also the future of a workable and successful ATV system may hang in the balance.

The only general conclusion which we believe to be warranted at this time is that the option to be preferred is a 6MHz system which does not require additional spectrum - provided that such a system is able to offer a picture that is NTSC-compatible, and found by most U.S. television viewers to be qualitatively acceptable and competitive with other signal alternatives. In addition to eliminating the opportunity costs associated with additional spectrum for ATV (see Tentative Decision at paragraph 82), such a policy choice would likely be the least disruptive and least costly to consumers, broadcasters and cable operators.

For the broadcasting industry, a 6MHz NTSC-compatible system could probably be accommodated with existing transmitters, antennas and STL's with some modifications, while all the other options would be much more difficult to implement. Both the 3MHz and 6MHz augmentation channel options would probably require broadcasters to install a second antenna and transmitter as well as a second STL. A second transmitter and antenna would certainly be required if an augmentation channel is not contiguous with the existing NTSC channel. The 6MHz simulcast channel option would also require, for a transition period, a second transmitter plant. The fact that many broadcasters employ up to 100% redundancy would multiply the incremental capital equipment and operating costs. One must also take into account the disruptions that would occur in the case of fully loaded transmitter towers requiring total moves to new sites or locating the augmentation or simulcast equipment at another location. Dual locations would also raise questions of reception problems.

The costs of implementing ATV options requiring additional spectrum underline the need for careful and thorough research to

test not only the engineering aspects of ATV but also consumer reactions to various systems. In our view, the difficult policy judgments involved should not be made in the absence of research information establishing what kinds of improvements the television audience may desire and be willing to pay for.

ATV Standards

We believe that it is crucial to the successful development of ATV that the Commission adopt a single transmission standard. If there were no government standard or multiple standards, receiver manufacturers would be faced with having to produce different receivers for different standards or run the risk that the system for which their single system receiver were designed would lose out in the competition for consumer acceptance. Some manufacturers would likely hold back until the market choice became clearer. Prices of early ATV sets would likely be higher under multiple standards both because the number of manufacturers would be smaller and because they would not enjoy the economies of scale that mass production under a single standard would allow. A second reason why it is likely that ATV development would be retarded under multiple standards is consumer confusion. The experience with AM stereo demonstrates that technical standards issues are not conducive to being readily resolved by the consumer marketplace. Once there is a standard, however, normal competition in the marketplace will decide which manufacturers do the best job of implementation and meeting consumer needs.

The proposal for an "open architecture" receiver is appealing on a theoretical level because it would avoid a government-imposed solution in favor of maximizing consumer choices among competing systems. On a practical level, however, open architecture would add a level of complexity at the receiver end which may be resisted by consumers and which would in any event appreciably raise the cost. Receiver manufacturers, who already operate at low profit margins,

would not have the incentive to manufacture such a high-ticket item because they could not count on mass market volume.

In setting a timetable for adopting an ATV standard, we believe that undue haste is not desirable because it would freeze research at a premature stage and benefit those proponents who are furthest along in their development, who are not necessarily those with the most innovative solutions. By its actions to date, the Commission has made clear to proponents that they must accelerate their development efforts. The level of recent activity gives reason to be optimistic that this is in fact occurring. At this juncture, we do not believe it would be realistic for the Commission to set a self-imposed deadline by which time it must act on a standard. The Commission will be in a much better position to establish both procedures and timetable for standard-setting after proponent systems are tested. The timetable to be addressed at this point should be the timetable for proponent system testing. The Advisory Committee, through its Systems Subcommittee, is currently actively engaged in examining that timetable.

Allotment and Post-Allotment Issues

We agree with the Commission's goal of improving existing broadcasting service through ATV and with the tentative finding in the Tentative Decision that the goal can best be realized by assigning suitable additional spectrum to existing licensees. We also believe there is no legal reason which would prevent the Commission from declining to entertain competing applications for any additional spectrum allocated for this purpose.

With respect to issues of allotment methodology, we question the wisdom of attempting to evaluate in the abstract the relative merits of various allotment options when they will depend in part upon factors yet unknown such as whether or not all existing broadcasters can be accommodated. Until such time as the Commission has

developed a factual record on the spectrum needs for ATV and reached a policy judgment on what spectrum should be made available, we believe it would be premature to decide those issues.

Conclusion

We support the Commission's conclusion that existing broadcasters should be permitted to implement ATV. The Commission has given proper recognition to the need to preserve the existing local broadcasting system and the unique service it provides the American public. We believe that the Commission's tentative finding that only currently allocated broadcast spectrum be made available for ATV is premature; spectrum decisions should be deferred until propagation tests are completed and analyzed. In the comparison of proponent systems, compatibility with the proposed 1125/60 production standard should be considered irrelevant while success in addressing noise and ghost problems should be accorded significant weight. Spectrum allotment decisions should be deferred until the various options are subjected to propagation testing. The Commission should adopt a single transmission standard but not set a deadline for doing so until proponent systems are fully tested. We also believe it would be premature to decide issues of allotment methodology; the Commission should first develop a factual record on the spectrum needs for ATV and reach a policy judgment on what spectrum should be made available.

Respectfully submitted,

Capital Cities/ABC, Inc.
1330 Avenue of the Americas
New York, NY 10019

Sam Antar
Vice President, Law & Regulation

Counsel for Capital Cities/ABC, Inc.

EXHIBIT A

The Shortcomings of 1125/60 as an ATV Standard

It is a mistake to assume that the 1125/60 production standard can be "easily" downconverted to NTSC and by extension to the eventual ATV system adopted. What needs to be addressed is whether the conversion can be accomplished with fidelity to the original production format, and without causing objectionable artifacts which degrade quality.

Any ATV system that is maximally compatible with the present NTSC system using 525 lines, 2:1 interlace, and a 59.94 Hertz field repetition rate should have a "parent" production standard that is integrally harmonically related to NTSC in order to minimize conversion artifacts. Non-harmonic line rate relationships force interpolation to synthesize missing picture elements and lines, while non-integral frame or field rate relationships necessitate either throwing out excess (overflow) or synthesis of shortfall (underflow) fields or frames. The former causes an apparent loss of resolution, especially with motion, while the latter causes periodic discontinuities in the motion itself. If neither is related, the problem is compounded.

These processes are best accomplished by signal processing in the digital domain. For static program material the results can be quite good, however temporal picture elements (motion), scene cuts, or electronically generated graphic or text elements when

downconverted create defects or artifacts that may not always be innocuous. They result from tradeoffs in the conversion software or algorithms. Similarly, audio pitch changes, periodic spurious sound, difficulty in maintaining sound and picture synchronization ("lipsync"), and altered total running time are possible undesired side effects. The processing power needed to conceal these defects sufficiently for an untrained or lay audience is considerable and not inexpensive. Furthermore it may not be possible with known technology to make NTSC and ATV downconversions that are aesthetically acceptable to trained viewers, program producers and directors in particular. In short, conversion artifacts in the temporal domain are a key stumbling block to the practical problem of using a world ATV standard as a source of program material for existing transmission standards <u>and</u> for all the proposed ATV systems.

Michael C. Davis
Capital Cities/ABC, Inc.
November 18, 1988

EXHIBIT B

Comments on: Tentative Decision and Further Notice of Inquiry; Docket No.87-268. (Spectrum Issues)

SUMMARY:

In the Tentative Decision and Further Notice of Inquiry, the FCC tentatively concluded that:

> "Any spectrum capacity needed for broadcast ATV systems will be obtained from the spectrum now allocated to broadcast television."

This tentative conclusion is based on:

1- A study conducted by the FCC Office of Engineering and Technology: "Interim Report: Estimate of Availability of Spectrum for Advanced Television (ATV) in the Existing Terrestrial Broadcast Bands" (FCC/OET TM88-1) and;

2- The preliminary studies of the Spectrum Utilization and Alternatives Working Party, Working Party 3 of the Planning Subcommittee of the FCC Advisory Committee, PS-WP3.

Both reports conclude that, on the basis of preliminary engineering studies, sufficient spectrum capacity might be available within the existing VHF/UHF allocations for either the augmentation or simulcast approach to accommodate most present stations, provided that (1) all the UHF "taboos" can be disregarded in the ATV environment, and (2) the geographical separation now required between co-channel and adjacent channel assignments can be substantially reduced.

Today, NTSC co-channel separation distances approximate 300 km. This distance needs to be reduced to approximately 160 km to accomodate all stations with 3 MHz of supplemental spectrum and most (98% VHF and 94% UHF) stations with 6 MHz of supplemental spectrum. This easing of assignment criteria requires technological improvements in television transmission systems and receivers. In particular, new ATV transmission technology must provide substantially better interference rejection characteristics than the current NTSC system. This implies that ATV receivers would be required to operate with much lower signal margins (D/U = 6 dB) than existing NTSC receivers if not, the service area would be reduced substantially or, not all stations could be authorized to broadcast ATV service. The FCC realizes that these may not be realistic conditions for growth of an ATV service.

PRESENT DAY ENVIRONMENT.

In the authorization of Television Stations, two field strength contours are considered. These are specified as Grade A and Grade B.
In defining service grades, the FCC has chosen to make Grade A that area wherein acceptable service is available to at least 70% of the locations 90% of the time, and Grade B that area were acceptable service is available to at least 50% of the locations 90% of the time.

Because of the variability of the signal, field strength is calculated on a statistical basis. Service is based on signal strengths exceeded at 50% of the locations, 50% of the time. Interference is based on signal strength exceeded at 50% of the locations, 10% of the time.
The FCC has published field strength charts, F(50,50) and F(50,10) for the different frequency bands, which relate the expected field strength to the transmitting antenna height and distance from the transmitting antenna.

The required field strength, F(50,50), in mV/m and in dB above one micro-volt per meter (dBu) for the Grade A and Grade B contours are as follows:

TABLE 1

Channels	Grade A mV/m	(dBu)	Grade B mV/m	(dBu)
2 - 6	2.5	68	0.22	47
7 - 13	3.5	71	0.63	56
14 - 69	5.0	74	1.60	64

- The peak power of the visual signal is used in making predictions of coverage.

- The TV broadcast station protected contour will be its Grade B signal level contour and is calculated from the authorized maximum radiated power, the horizontal radiation pattern, height above average terrain (HAAT) in the pertinent direction, and the appropriate chart from FCC 73.699.

Example: For a high-band VHF station operating at maximum permitted EIRP, 316 kW at 1000', the distance to the Grade A contour (71 dBu) would be 64.4km (40 miles), and the distance to the Grade B contour (56 dbu) would be 95.7km (59.5 miles).

CO-CHANNEL AND ADJACENT CHANNEL SEPARATION FOR NTSC.

Minimum Co-Channel and Adjacent Channel distance separation is given in FCC 73.610:

Co-Channel Separation:

TABLE 2

Zone	Channels 2-13		Channels 14-69	
	km	(miles)	km	(miles)
I	272.7	(169.5)	248.6	(154.5)
II	304.9	(189.5)	280.8	(174.5)
III	353.2	(219.5)	329.0	(204.5)

Adjacent Channel Separation:

TABLE 3

Zone	Channels 2-13		Channels 14-69	
	km	(miles)	km	(miles)
ALL	95.7	(59.5)	87.7	(54.5)

Assumed Transmit Facilities:

TABLE 4

Channels	TX PWR (kW)	ANT.HEIGHT (Feet)	CITY GRADE km (miles)	GRADE A km(miles)	GRADE B km (miles)
2 - 6	100	1,000	42.3 (26.3)	54.7 (34)	104.0 (64.7)
7 - 13	316	1,000	52.6 (32.7)	64.4 (40)	95.7 (59.5)
14 - 69	5,000	1,200	59.2 (36.8)	69.1 (43)	89.7 (55.8)

Assumed Receive Planning Factors:

There appears to be no general consensus on what is a typical receive antenna system. The following planning factors will be used where necessary.

TABLE 5

VHF Antenna		UHF Antenna	
Gain	8 dB	Gain	10 dB
F/B	8 dB	F/B	10 dB
Losses	3 dB	Losses	5 dB

Where F/B stands for Front-to-Back ratio, and the losses are those of the transmission line between antenna and receiver.

Desired-to-Undesired Protection Ratio (D/U): (See FCC/OET-TM88-1, PS/WP3-0051 and PS/WP3-0062)

The FCC customarily expresses Desired-to-Undesired (D/U) field strength conditions by relating the mean desired field and the undesired field that is not exceeded 10% of the time. Thus, for the desired signal the FCC F(50,50) propagation curves are used and for the undesired signal the F(50,10) propagation curves are used.

Figures 1 and 2 show the signal levels at the receiver's terminals using the F(50,50) and F(50,10) curves for the Desired and Undesired signals respectively, based on the assumptions made in Table 4 for VHF high band.

From these graphs, one can construct new graphs of F(50,10) Undesired to F(50,50) Desired signal ratios versus distance from the Desired transmitter for various Desired to Undesired transmitter spacings. This is shown in Figure 3 for co-channel transmitter spacings of 160 km and 300 km. It is assumed that the receiver is in-line with the two transmitters, that the receive antenna has unity gain and F/B is also unity. Figure 3 can be used to relate transmitter spacings to signal conditions at the receiver.

Example of Co-Channel Interference:

Using the graphs of figure 3, the U/D performance for the 160 km transmitter spacing case can be compared to that of the 300 km case.

For 300 km co-channel spacing, the U/D ratio along the line between the two transmitters is approximately -45 dB for City Grade coverage, -37 dB for Grade A and -17 dB for Grade B.

Figure 4a shows how these protection ratios affect the actual coverage areas. 97.4% of the Grade A coverage area falls within the 40 dB protection contour. And as shown in Figures 4b, 4c and 4d respectively, more than 2% of the Grade B coverage area falls within the 20 dB protection contour, 90% falls within the 30 dB protection contour and 73% falls within the 40 dB protection contour.

Revised Distance Separation.

For 300 km co-channel transmitter spacing, the FCC calculated that 77% of the stations could be provided with 3 MHz of additional spectrum, and 60% of the stations could be provided with 6 MHz of additional spectrum.

To accomodate more stations with 3 MHz of additional spectrum, the FCC/ OET and the PS/WP3, in their spectrum availability studies, gradually reduced the spacing between the two transmitters until, at 160 km separation, all stations could be accomodated. For this distance separation, only 96% of the stations could be provided with 6 MHz of additional spectrum.

The expected protection ratios for the 160 km spacing can be determined from the 160 km graph of Figure 3. For City Grade coverage, the protection ratio is reduced by 27 dB; for Grade A coverage it is reduced by 29 dB and for Grade B coverage it is reduced by 34 dB.
Note that the City Grade protection ratio for 160 km transmitter spacing is about the same as the Grade B protection ratio for 300 km transmitter spacing. About equal performance can therefore be expected at these contours for NTSC signal format transmissions. This means that with closer spacing, the coverage has been reduced by 70% from what it was originally. This can be seen by comparing Figure 4b to Figure 5a.

To co-exist with an NTSC transmitted signal the "new" transmitted signal, the supplemental signal or the simulcast signal, must be such as to provide the same or less interference at this closer spacing as an NTSC transmitted signal would for 300 km spacing.

Figures 5 and 6 show the effect of the closer spacing on the coverage areas. Whereas in Figure 4d, 73% of the Grade B coverage area falls within the 40 dB contour, Figure 6d shows that only 15% of the Grade B area falls within the 40 dB contour, and from figure 5a it follows that only 51% of the city Grade coverage area falls within the 40 dB contour.

8% of the Grade B contour falls outside the 0 dB contour, 18% falls outside the 10 dB contour and 33% falls outside the 20 dB contour. These results are summarized in Tables 6 and 7 and Figures 4, 5 and 6.

Today, the FCC Rules consider the Grade A coverage area to be the interference free area (40 dB D/U). Note that in Figure 4a only 2.6% of the Grade A coverage area falls outside this 40 dB D/U contour. Figure 3 also shows that:

(1) either a 29 dB improvement is needed in the D/U ratio to provide the same protection ratio for 160 km transmitter spacing as for 300 km for equal performance in the Grade A coverage area or,
(2) the ATV supplemental signal or simulcast signal must be capable of tolerating an 8 dB D/U ratio.

For the latter case, the service area will still be drastically reduced.

POSSIBLE SOLUTION.

In paragraph 114 of the Further Notice, the Commission recognizes that, even though the NTSC interference protection criteria are based on a nominal 45 dB D/U ratio, by taking advantage of the structure of the NTSC signal it was found that by off-setting the carrier frequencies of co-channel stations by approximately 10 kHz permits protection ratios to be reduced to 28 dB D/U without reducing reception quality. This requires that the transmitted signals have the same line frequency.

CCIR Recommendation 418-3 concludes that for NTSC this value of 28 dB may be further reduced to 20 dB if a carrier frequency separation equal to an appropriate multiple of the frame frequency can be maintained.

It is therefore important that the "new" signal, either the supplemental signal or simulcast signal, must be spectrum compatible with the NTSC signal and this can only be accomplished if the scan rates of the "new" signal are precisely related to the scan rates of the NTSC signal. This precludes the use of the 1125/60 signal format for terrestrial transmission.

As stated above, to obtain the same D/U protection ratio for Grade A coverage for 160 km and for 300 km transmitter spacing, the ERP of the interfering transmitter has to be reduced by 29 dB. Therefore, a novel method of modulation has to be used for the supplemental or simulcast signal to cause 29 dB less interference.

Such systems have been proposed by Dr. Schreiber of MIT and by Zenith. In the Zenith spectrum compatible system, the average and the peak power of the transmitted signal is substantially lower than the power of an equivalent NTSC transmitted signal. Zenith claims that the D/U protection ratio can be improved by 27 dB.

Figure 7 compares the U/D ratio of the 300 km NTSC case to the U/D ratio of the 160 km case assuming that a 27 dB improvement can be realized. The two curves cross over at the City Grade distance. Within this distance, the 160 km spacing case offers a slight improvement in U/D

over the 300 km case, but above this distance, the curves depart from each other so that at the Grade B distance, the U/D for the improved 160 km case remains about 7 dB worse than for the 300 km case.

Figure 8 shows the same graphs as Figure 7, but this time it is assumed that for both cases an 8 dB directional receive antenna is used in the Grade B coverage area. A U/D ratio equal to 30 dB can be obtained up to a distance of 80 km from the desired transmitter. This is halfway between the two transmitting stations.

Other benefits which new modulation techniques, such as sub-band coding, adaptive modulation, digital transmission of low frequency information, time dispersion etc., can offer are: correction of multipath and frequency distortion as well as substantial improvement in noise performance.

CONCLUSION:

When reducing the spacing between an NTSC VHF High Band television station and a co-channel station transmitting a supplemental signal or simulcast signal then the coverage area of both stations will be reduced well beyond acceptable limits unless:

(1) Both transmitted signals are spectrum compatible, i.e., the line and frame rate are NTSC related so that precision carrier frequency offset can be used and,

(2) The "new" signal of the supplemental channel or simulcast channel causes approximately 30 dB less interference to the wanted NTSC signal. At the same time, the receiver which receives this "new" signal must be immune to interference caused by the co-channel NTSC signal.

It should further be noted that:

Modulation techniques specifically developed to reduce interference have been proposed by several proponents. These techniques also offer major improvements in other transmission defects such as multipath distortion and noise. It is essential to correct these shortcomings of terrestrial transmission in order to preserve the improved quality made possible by HDTV.

A.G.Uyttendaele
Capital Cities/ABC, Inc.
November 18, 1988.

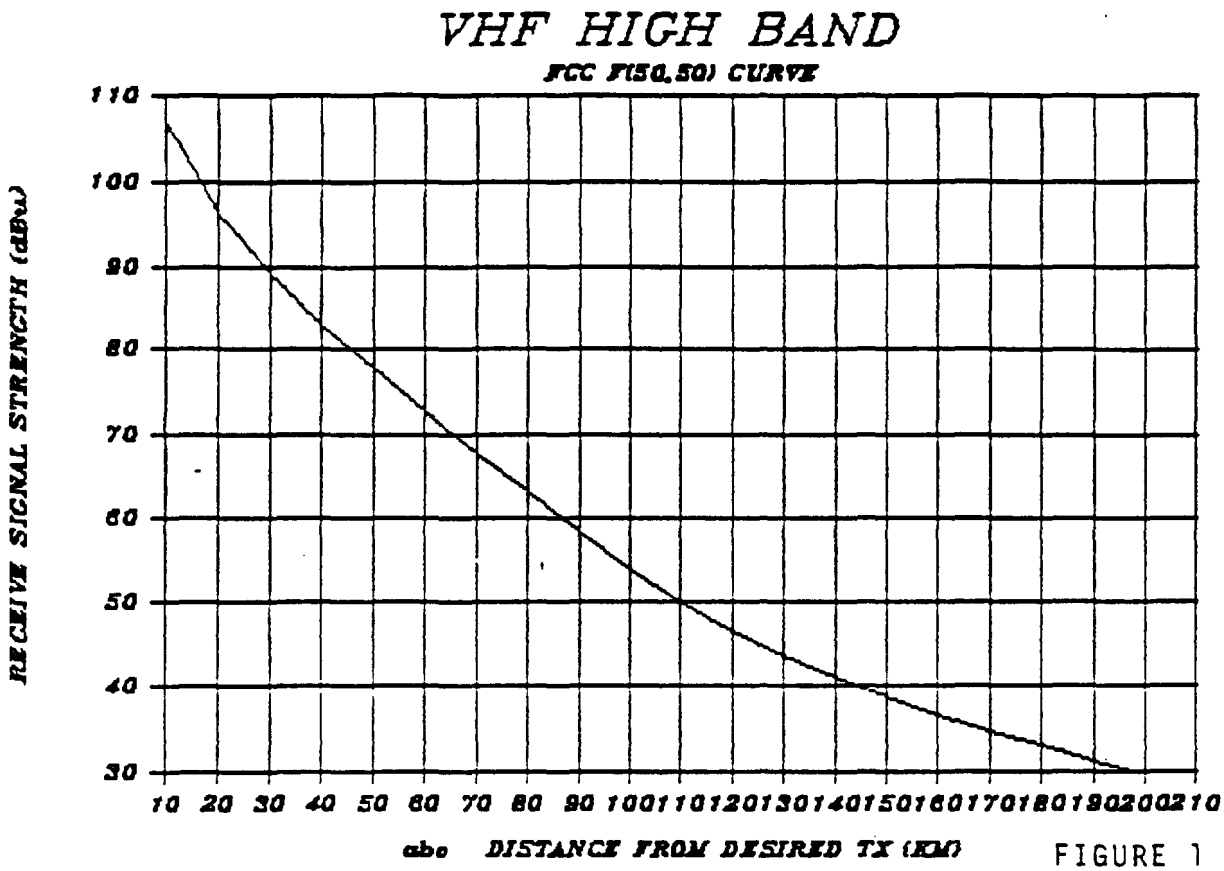

FIGURE 1

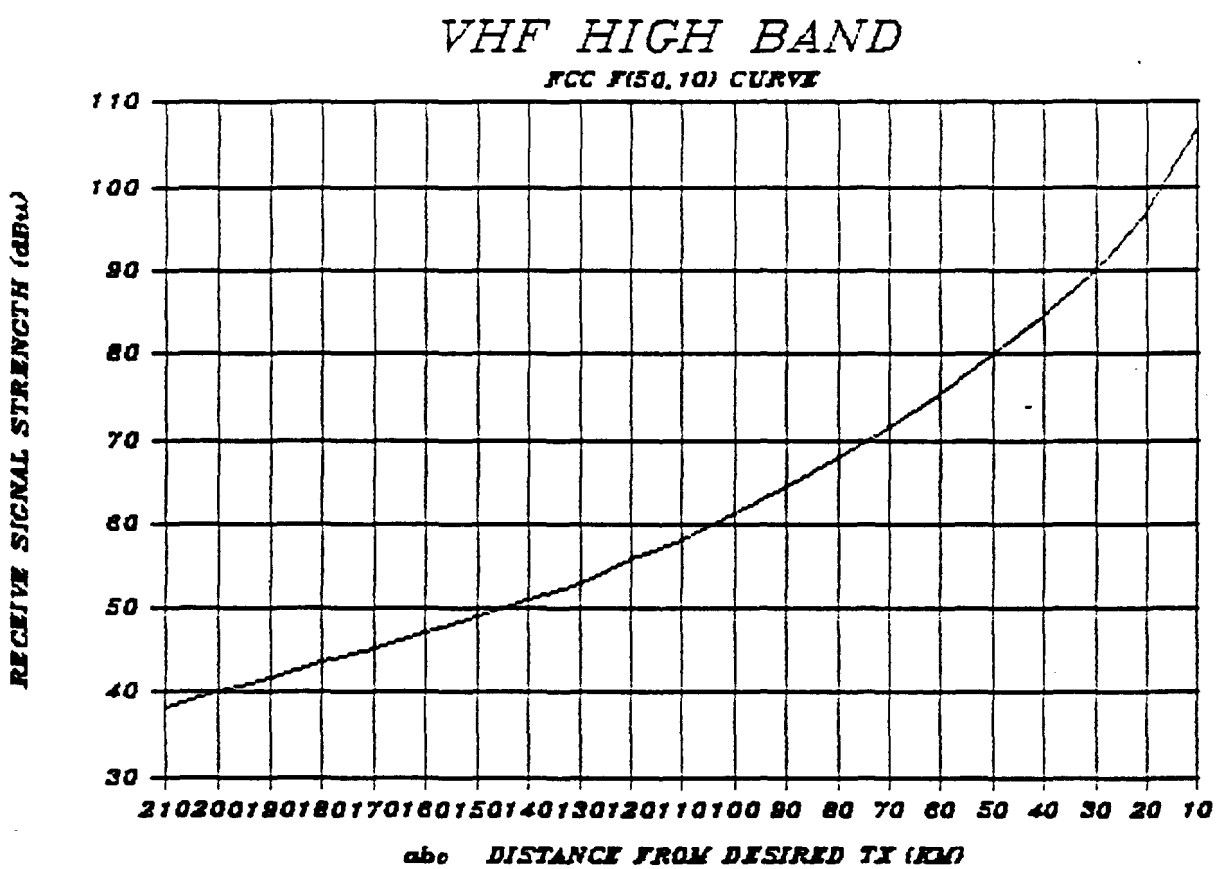

FIGURE 2

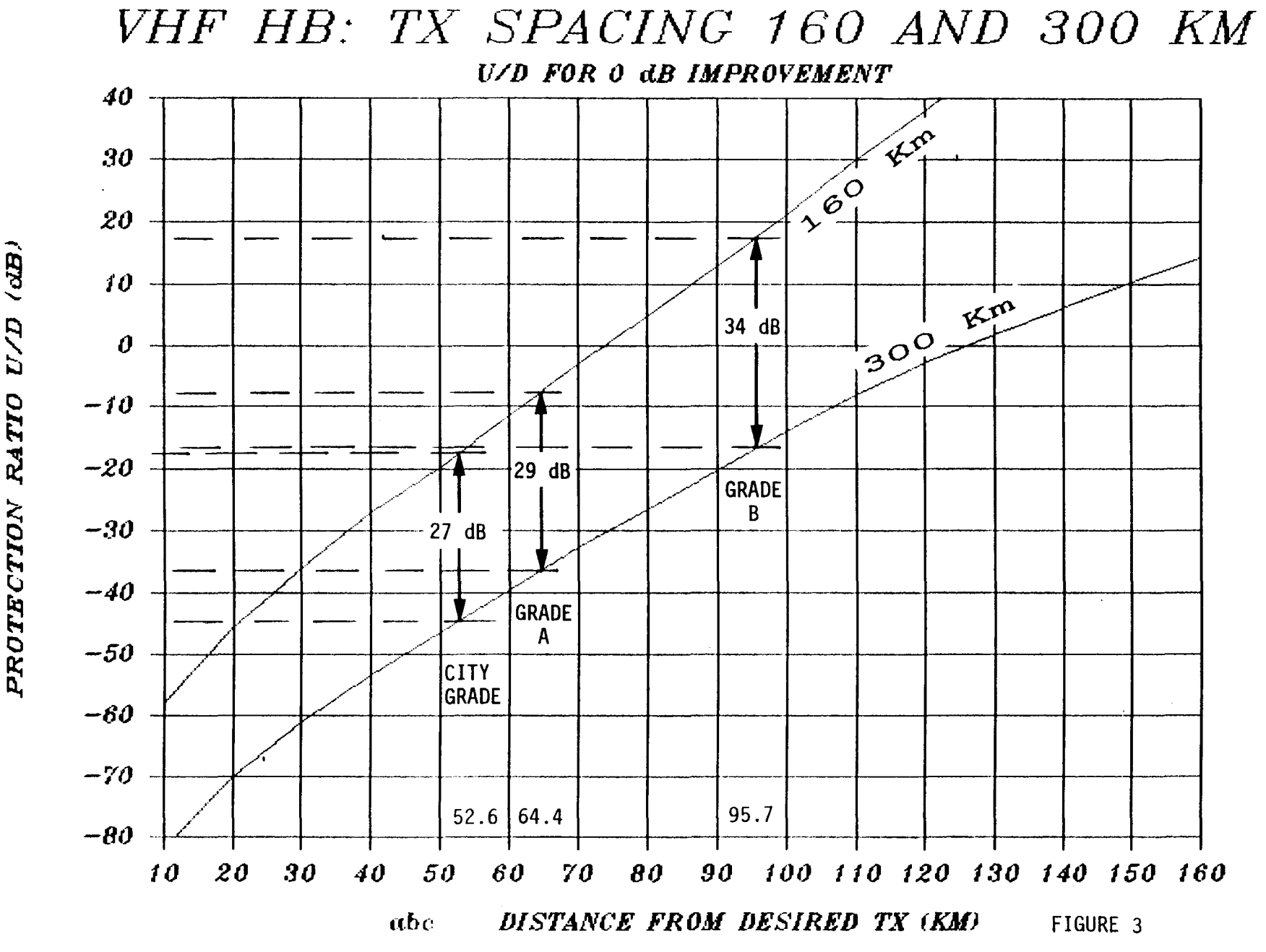
VHF HB: TX SPACING 160 AND 300 KM
U/D FOR 0 dB IMPROVEMENT
PROTECTION RATIO U/D (dB)
40
30
20
10
0
-10
-20
-30
-40
-50
-60
-70
-80
160 Km
300 Km
34 dB
29 dB
27 dB
GRADE B
GRADE A
CITY GRADE
52.6
64.4
95.7
10 20 30 40 50 60 70 80 90 100 110 120 130 140 150 160
DISTANCE FROM DESIRED TX (KM)

FIGURE 3

VHF HIGH BAND CO-CHANNEL INTERFERENCE PROTECTION RATIO FOR 300 km SPACING.

REFERENCE CASE :

40 dB PROTECTION RATIO
FOR GRADE A.

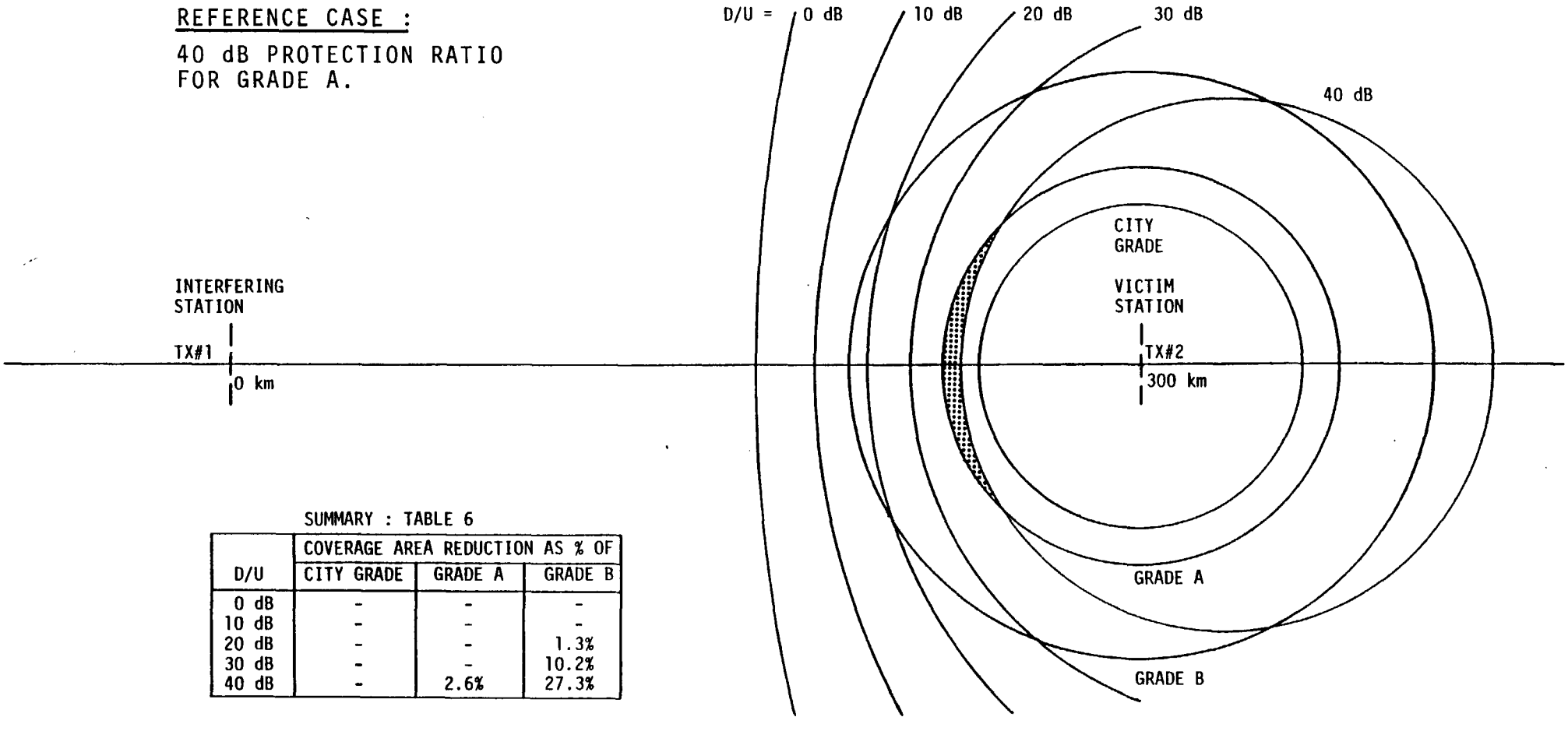

SUMMARY : TABLE 6

D/U	COVERAGE AREA REDUCTION AS % OF		
	CITY GRADE	GRADE A	GRADE B
0 dB	-	-	-
10 dB	-	-	-
20 dB	-	-	1.3%
30 dB	-	-	10.2%
40 dB	-	2.6%	27.3%

FIGURE 4A

CC/ABC

VHF HIGH BAND CO-CHANNEL INTERFERENCE PROTECTION RATIO FOR 300 km SPACING.

GRADE B :

D/U = 20 dB

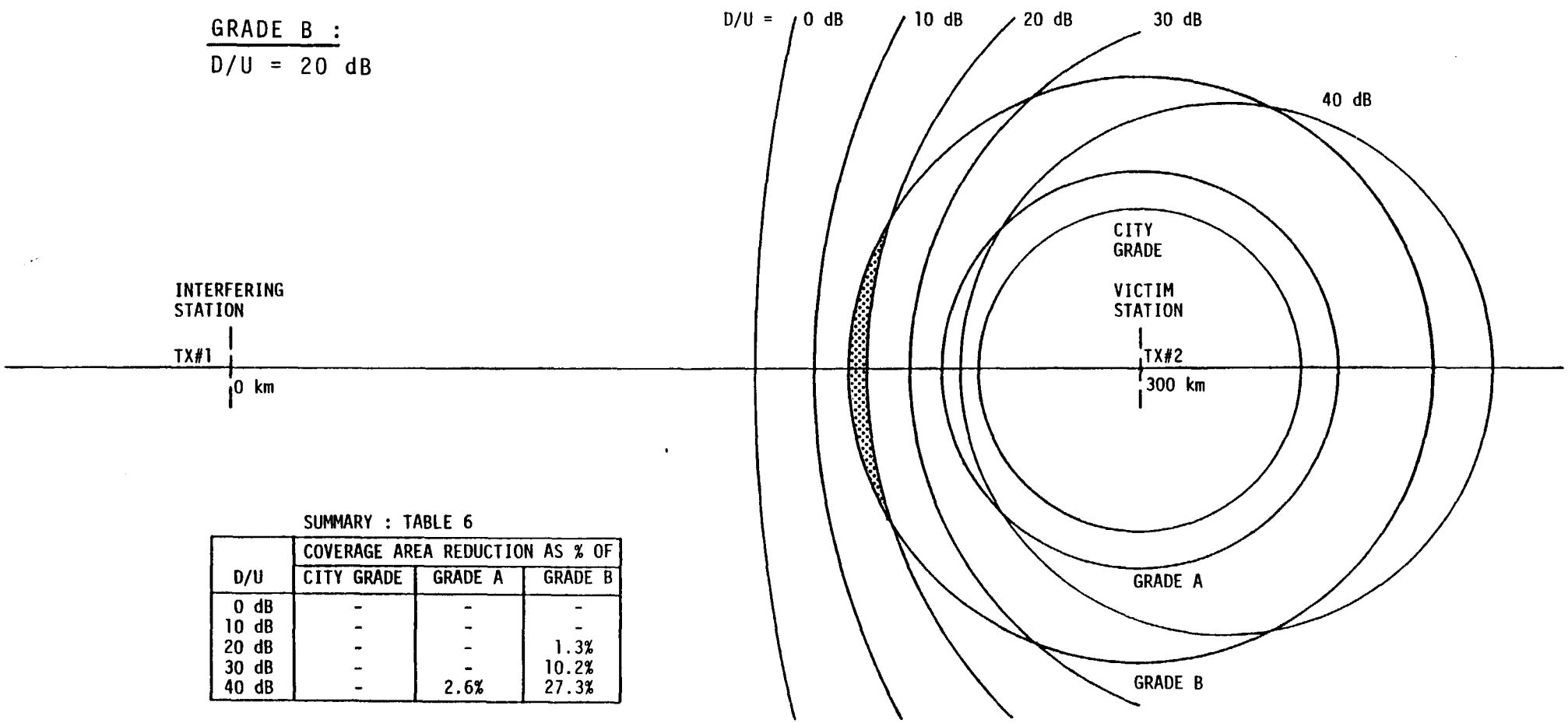

SUMMARY : TABLE 6

D/U	COVERAGE AREA REDUCTION AS % OF		
	CITY GRADE	GRADE A	GRADE B
0 dB	-	-	-
10 dB	-	-	-
20 dB	-	-	1.3%
30 dB	-	-	10.2%
40 dB	-	2.6%	27.3%

FIGURE 4B

CC/ABC

VHF HIGH BAND CO-CHANNEL INTERFERENCE PROTECTION RATIO FOR 300 km SPACING.

GRADE B :

D/U = 30 dB

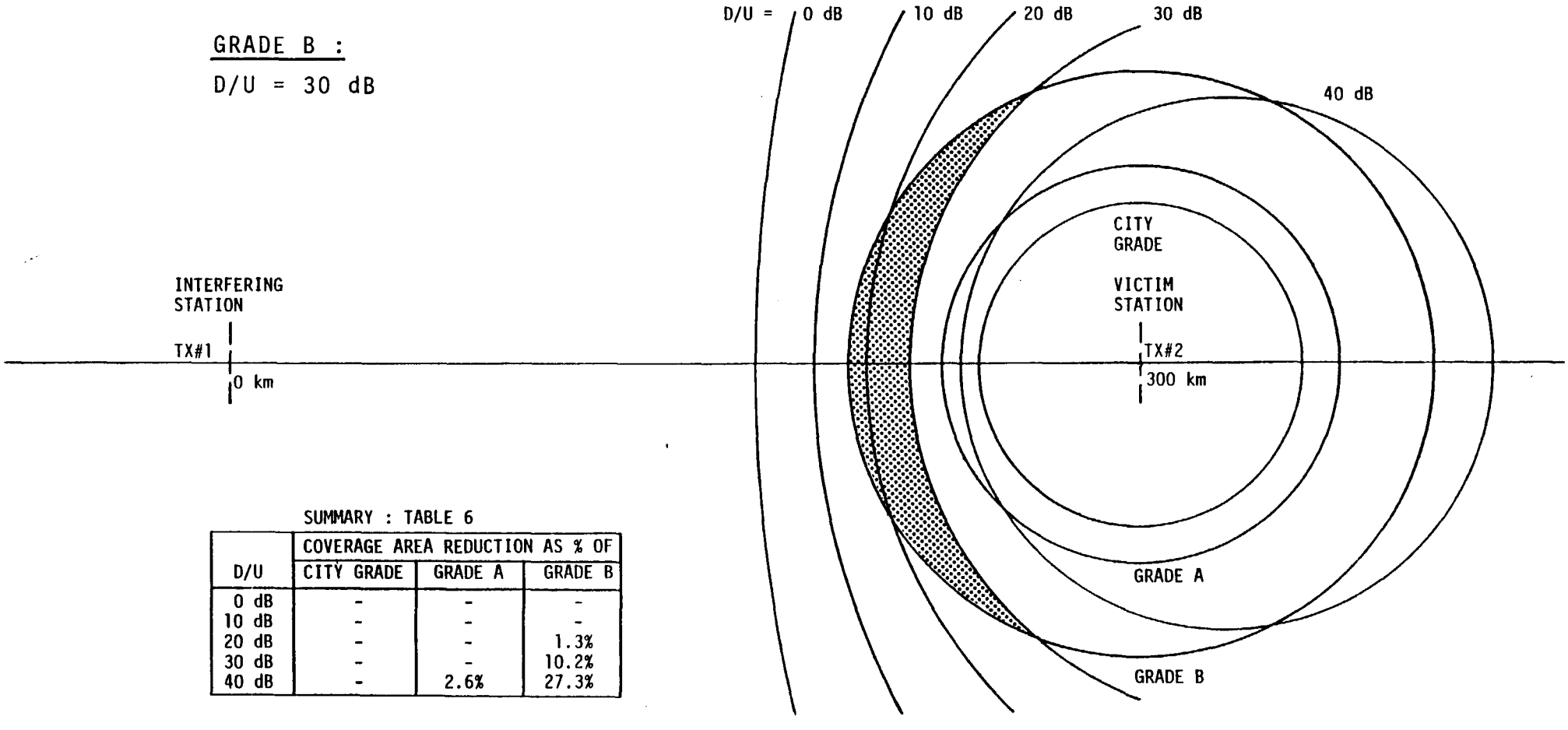

SUMMARY : TABLE 6

D/U	COVERAGE AREA REDUCTION AS % OF		
	CITY GRADE	GRADE A	GRADE B
0 dB	-	-	-
10 dB	-	-	-
20 dB	-	-	1.3%
30 dB	-	-	10.2%
40 dB	-	2.6%	27.3%

FIGURE 4C

CC/ABC

VHF HIGH BAND CO-CHANNEL INTERFERENCE PROTECTION RATIO FOR 300 km SPACING.

GRADE B :

D/U = 40 dB

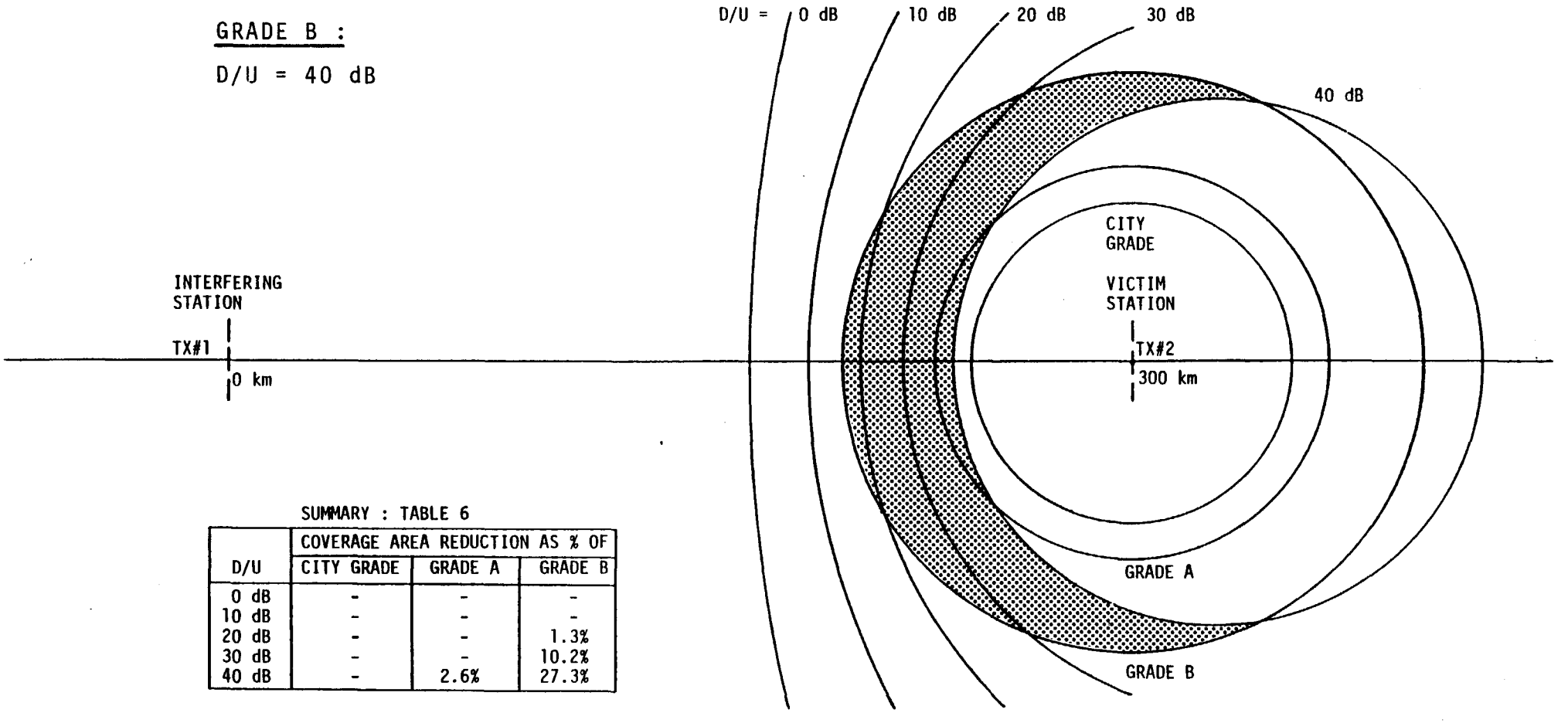

SUMMARY : TABLE 6

D/U	COVERAGE AREA REDUCTION AS % OF		
	CITY GRADE	GRADE A	GRADE B
0 dB	-	-	-
10 dB	-	-	-
20 dB	-	-	1.3%
30 dB	-	-	10.2%
40 dB	-	2.6%	27.3%

FIGURE 4D

CC/ABC

VHF HIGH BAND CO-CHANNEL INTERFERENCE PROTECTION RATIO FOR 160 km SPACING.

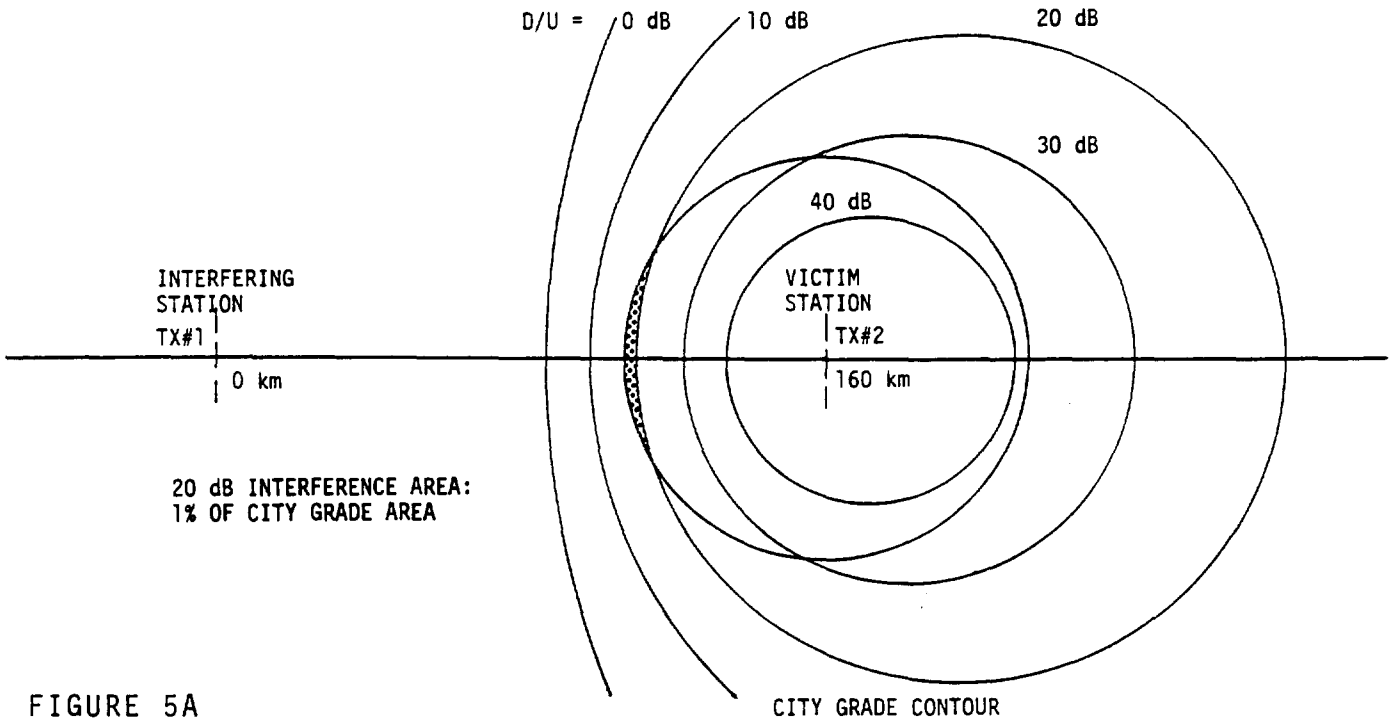

FIGURE 5A

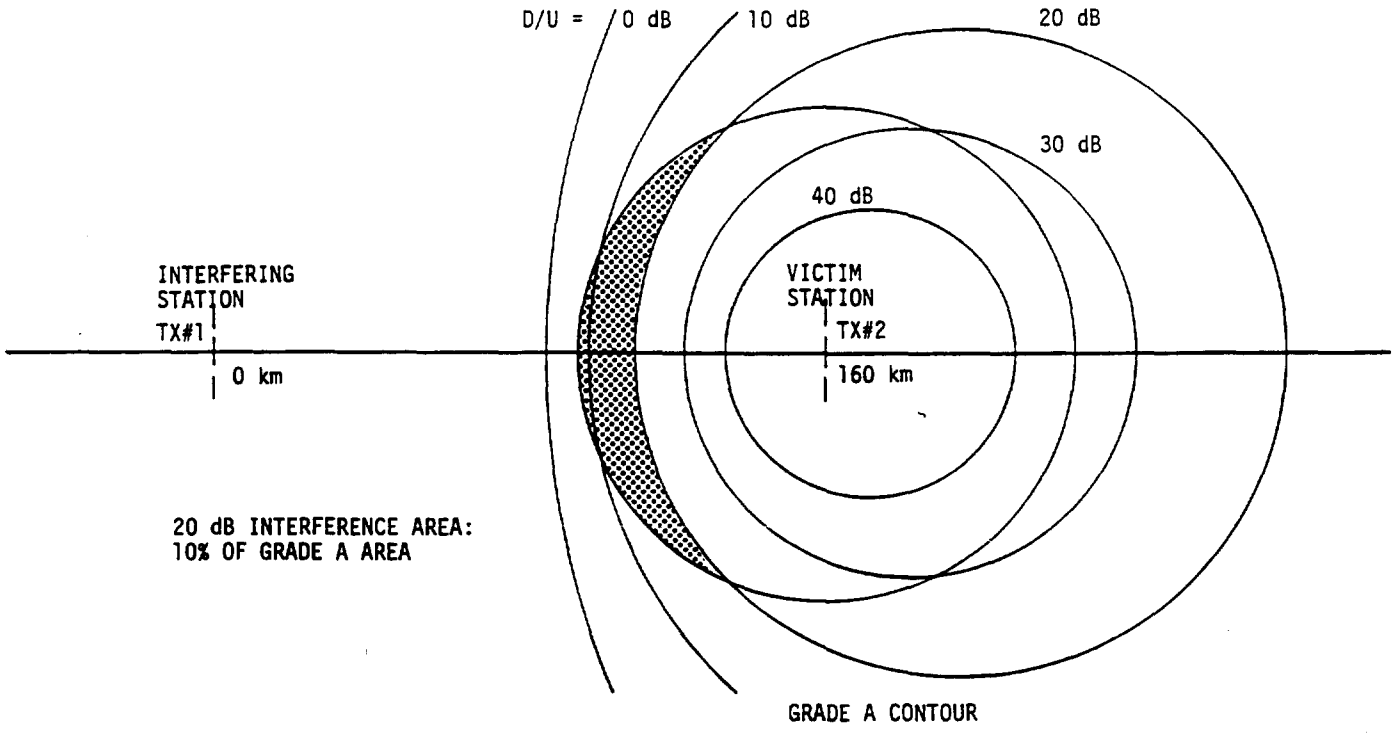

FIGURE 5B

CC/ABC

VHF HIGH BAND CO-CHANNEL INTERFERENCE PROTECTION RATIO FOR 160 km SPACING.

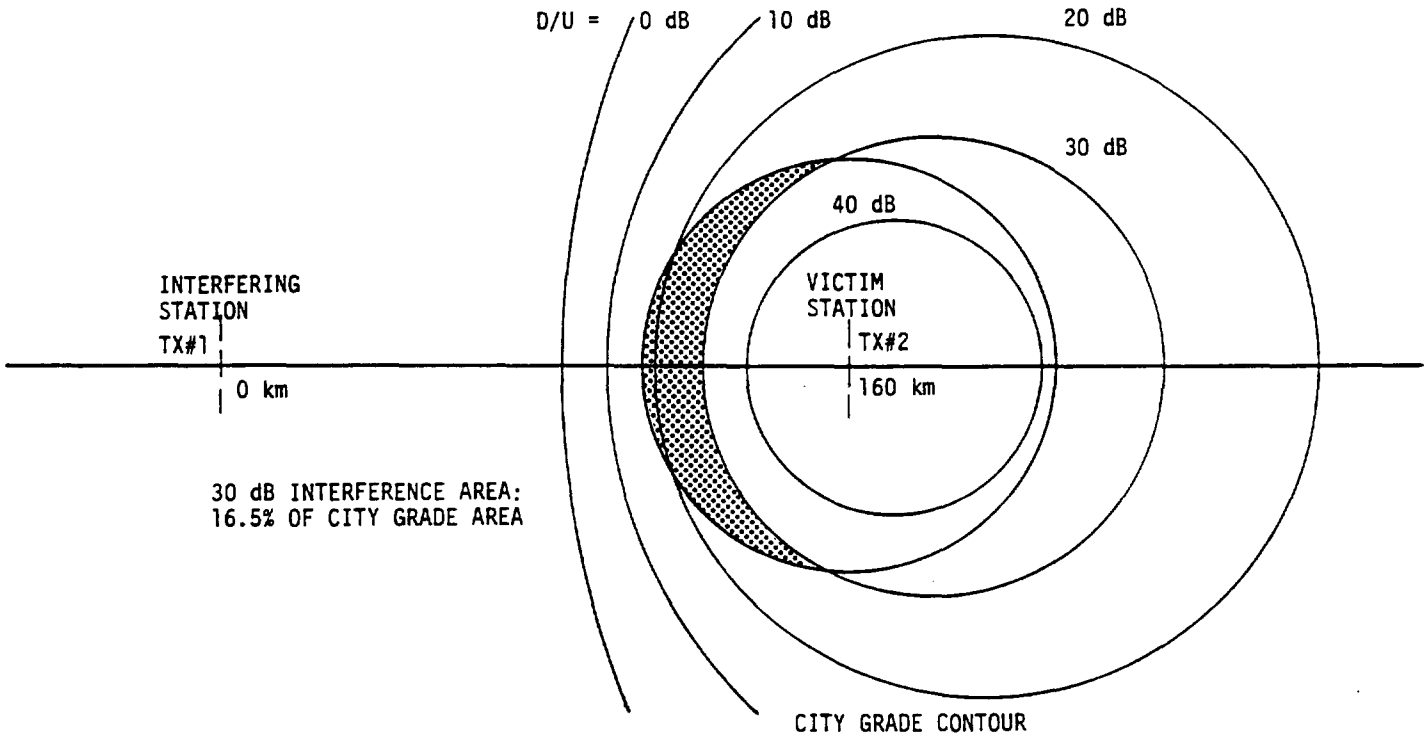

FIGURE 5C

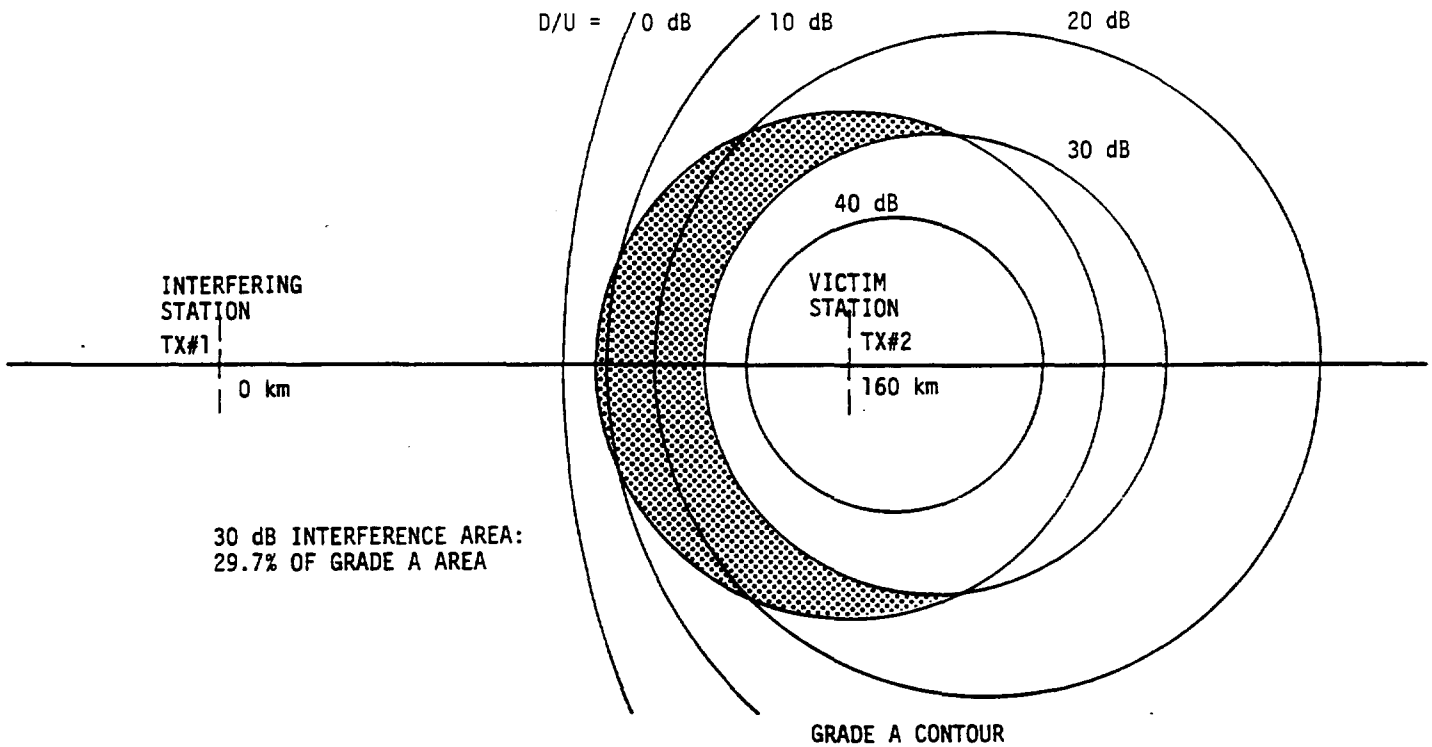

FIGURE 5D

CC/ABC