TAB

****

FOR IMMEDIATE DISTRIBUTION WITHOUT RESTRICTION

****

ANOTHER METHOD OF ASPECT-RATIO CONVERSION FOR USE IN RECEIVER-COMPATIBLE EDTV SYSTEMS

Two systems with different aspect ratios are inherently incompatible. If both screens are to be filled, some image area shown on one screen must be cut off when displayed on the second screen. (Surgery method) If both screens show the same image area, then some portions of at least one screen must be blank. (Bar method) These methods are shown in Fig. 1. For example, in the Philips and Sarnoff systems, side panels are added to the narrow screen so as to fill the wide screen. In the previously proposed MIT-RC system, as well as in a common method of showing wide-screen movies on 4:3 TV, the "letterbox" scheme is used in which blank bars are used at top and bottom of the normal TV screen. Of course, compromise is possible (bars or panels on both screens) and both methods can be used simultaneously. In this short memo, we propose a scheme that, in the first instance, satisfies those who insist on filling the NTSC screen and, eventually, achieves high quality on the wide-screen receiver.

The Surgery Method

The principal problem with this method is that the area shown on one screen but not on the other *must* be devoid of important information. In addition, the screen that does not utilize the transmitted signal at all is effectively wasting channel capacity. From the artistic point of view, the composition of the image can be correct only for that portion of the image area shown on both screens. If top and bottom panels are added to the wide image to fill the narrow screen, then the composition can only be correct for the wide screen. If side panels are added to form the wide image, then the composition can only be correct for the narrow screen. This is especially unfortunate when the wide screen is the principal attraction of the new system, since the full theatrical effect of the wide screen can not be achieved.

An additional problem with the transmission of side panels is the possibility that the seams may show under actual transmission conditions if the center and side-panel signals are degraded differently.

The Bar Method

The principal disadvantages of this method are that the bars are visible on at least on of the screens and that the image area is smaller than the screen area. The principal advantage is that both images have the same shape and therefore no cropping is needed. Furthermore, the 16:9 (1.78) ratio is very close to 1.85, which is a popular film format, and about midway between 1.33 and 2.25, which are two other popular film formats. There is also no possbility of seeing seams, since there are none.

Note that in some older productions, where "protected" or "safe" areas were not provided for during the cinematography, the surgery method may be impossible without very obvious cuts of important image areas. The bar method *must* be used in those cases. In a few cases, such as titles, anamorphic distortion is employed to avoid cutoff or bars. This must be considered a method of last resort.

Proposed Method

The previous discussion covers all possible means of dealing with this problem. It remains to choose a method or methods that are least bad. The principles proposed are the following:

1. Since there is to be a transition to the wide screen, its artistic effect is to be emphasized over that of the older narrow screen.

2. The new system may be introduced in stages, with least disturbance to the narrow screen in the first stage and maximum quality on the wide screen in the final stage.

3. Seams are to be avoided if possible.

4. The method should be applicable to any system in which extra information is hidden within the NTSC signal.

With these principles in mind, and with a 'smart' receiver[1] that makes it possible to any of the methods of Fig. 1, the method to be used at any time can be selected according to the number of EDTV receivers in use and the subject matter. For example, the various methods can be used in stages, starting out with one that fills the NTSC screen and ending with one the produces the highest possible picture quality and production values on the EDTV screen. The following is one possibility: *Stage 1.* No bars on the NTSC receiver. Enhancement on the EDTV receiver as made possible by the information hidden in the NTSC signal. Wide screen achieved on the EDTV receiver by discarding 25% of transmitted picture height. (The enhancement information in this area may be used on the EDTV receiver, although it could not then be coherent with the main picture information.) The 75% area, of course, must be protected in production, so that the extra height of the 4:3 image must be devoid of meaningful content. This is the method to be used in the *Eureka* system. It is also commonly used when shooting 1.85:1 'flat' widescreen films. In that case, the negative is 4:3 and the theatre print is 1.85:1.

Stage 2. 12.5% bars (30 lines each top and bottom) on NTSC receiver. 12.5% of picture height discarded on EDTV receiver. The bar area is used for additional enhancement. Other parameters as in stage 1.

Stage 3. 25% bars (60 lines each top and bottom) on NTSC receiver. Same aspect ratio and image area on both kinds of receiver. Other parameters as in stage 1 and 2.

[1]Like the Open-Architecture Receiver (OAR), ATRP-T-88

Stage 4. (Optional) When sufficient EDTV receivers are in use, and if they are programmable, then at some suitable time, the NTSC transmission can be dropped and full HDTV achieved on the new receivers. The mode of transmission of all signal components would be as used in the bar areas of Stages 2 and 3. Since the NTSC signal structure is not needed in these areas (except to keep receivers in synch and to keep the audio working) the transmission can be much more efficient.

The appearance of the screens in each stage is shown in Fig. 2.

Discussion

The scheme described here may be used in any receiver-compatible HDTV system in which enhancement information is hidden in the NTSC signal. The stages described may be employed as dictated by events and, particularly, by the number of EDTV receivers in use. It is not necessary to proceed to the next stage if conditions do not warrant it. Note that the quality of the image on the EDTV receiver becomes progressively higher at each new stage.

As in any backward-compatible system, the incentive for viewers to buy new receivers to see the same programs in somewhat higher technical quality is not great, and therefore the acceptance rate may be quite low. From the artistic or aesthetic point of view, the method described here of dealing with the aspect ratio problem will produce superior images on the new receiver, and the acceptance rate may be higher. Ultimately, when there are few old receivers in use, little audience share will be lost by shifting to a high-efficiency noncompatible format as in Stage 4. At that time, consideration may be given to preserving a few channels for backward-compatible transmission. Another possibility is to continue to transmit in the compatible format those programs that really do not need the very high definition, and to reserve the use of the noncompatible format, at least for a period, for the special programs that would benefit from the superior technical quality.

It is also possible to switch formats on a program-by-program or even a scene-by-scene basis according to subject matter. The 3 (or 4) stages described here are most suitable for productions optimized for 16:9 aspect ratio. For productions or scenes optimized for 4:3, or in which the artist has legal authority to insist on that format,[2] side bars can be used on the EDTV receiver. Of course, all of these possibilities require that the receivers be of a type that can decode the formats of all of the stages.

William F. Schreiber

[2] as Woody Allen often has

A CHARACTERISTIC OF THE PANEL METHOD

Adding Side Panels

A picture, properly composed for the 4:3 aspect ratio, is extended horizontally to 16:9 by adding side panels. By necessity, the side panels are devoid of important information.

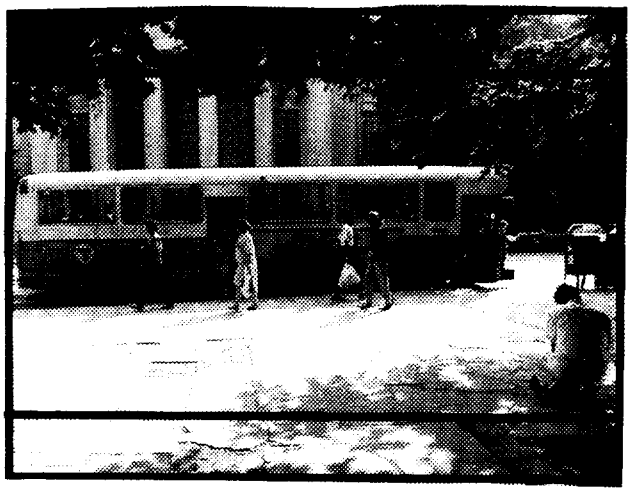

Adding Top and Bottom Panels

A picture, properly composed for the 16:9 aspect ratio, is extended vertically to 4:3 by adding top and bottom panels. By necessity, the panels are devoid of important information.

NTSC Display | EDTV Display | 'Protected' Area

4:3

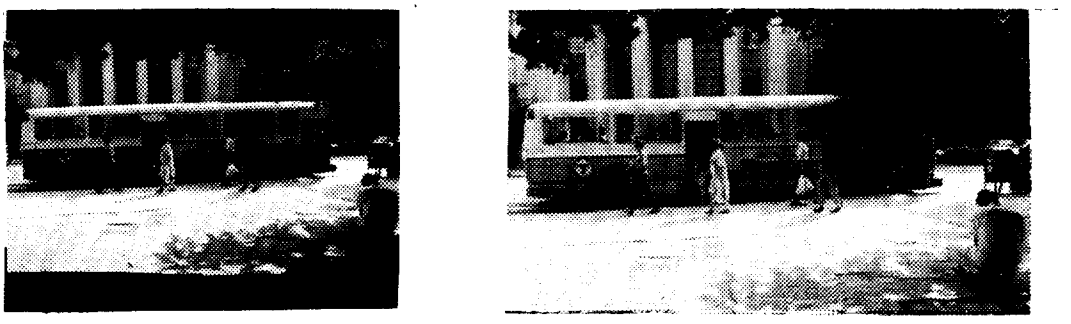

16:9

Bar Method. Part of picture tube not used.
Both Pictures have same aspect ratio.

4:3

16:9

Surgery Method. Both screens filled.
Side or top panels added or subtracted.

Fig. 1 Comparison of Bar and Surgery Methods for Adapting Aspect Ratio.

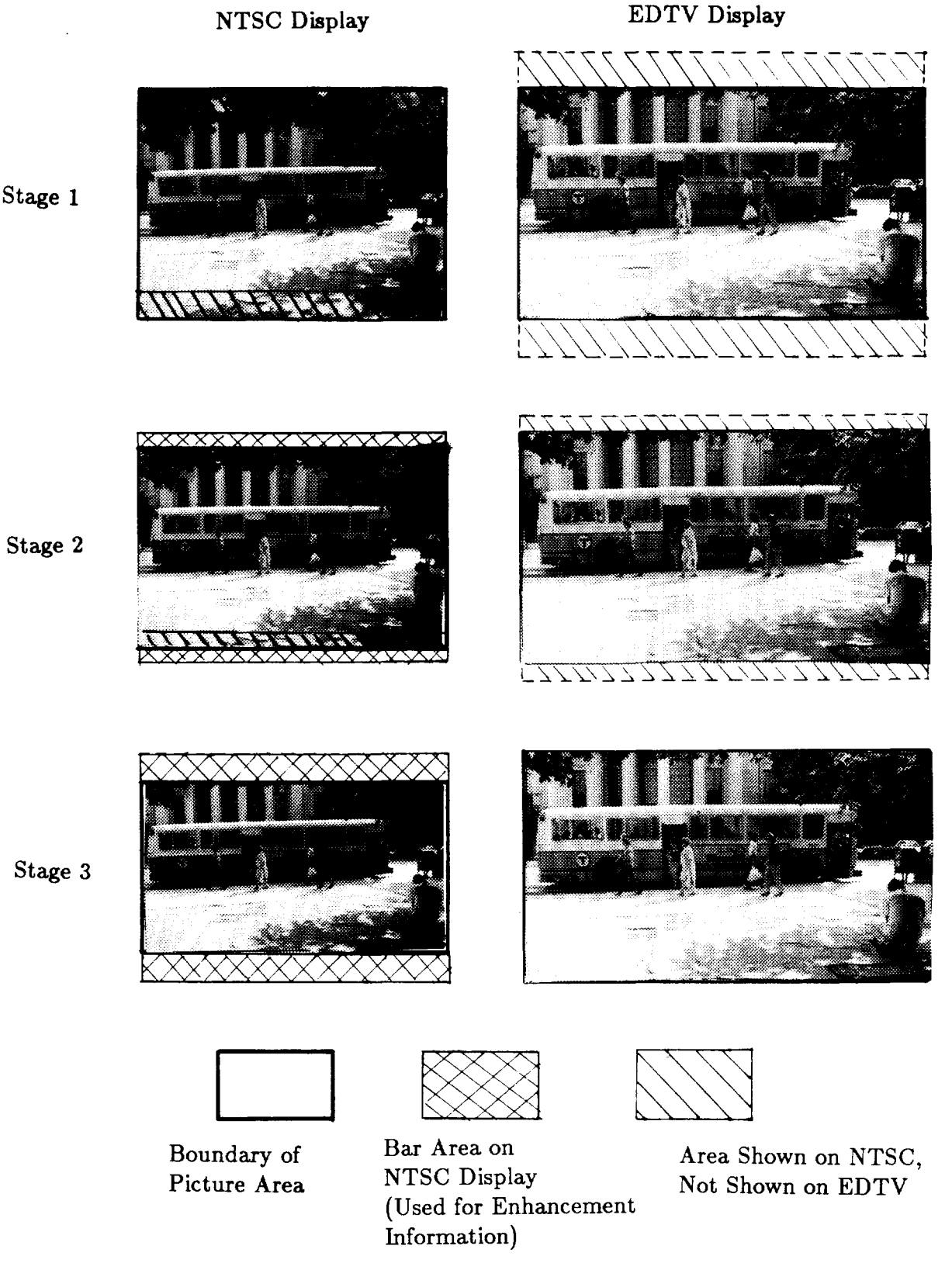

Fig. 2 The Appearance of the Screens in the Three Stages. In the first stage, the surgery method is used in which top and bottom sections of the narrow-screen picture are discarded to form the wide-screeen picture. In the final stage, the bar method is used in which both pictures are 16:9. 25% of the height of the NTSC transmission is used for enhancement information. The second stage is a compromise and uses both methods. EDTV image quality improves from stage to stage.

TAB

wfs47

The Economic Impact of Advanced Television Systems

Comments of

William F. Schreiber
Director, Advanced Television Research Program

and

W. Russell Neuman
Director, Audience Research Facility

The Media Laboratory
Massachusetts Institute of Technology
E15-387 MIT Cambridge Mass. 02139

submitted to the
House Subcommittee on Telecommunications and Finance
September 7, 1988

These comments are the opinion of the authors and do not represent the official positions of their research sponsors or of MIT.

Executive Summary

- Advanced Television (ATV) Systems capable of delivering greatly improved pictures to the home are coming. Their economic impact is likely to be large, and it can be either positive or negative, depending on the percentage of domestic value added to ATV receivers sold in the US.

- Revival of the consumer-electronics industry based on ATV would have many direct economic benefits. A major indirect benefit would be to bolster the strategically important semiconductor industry.

- The rate of growth of ATV and the degree of US participation both depend very much on the transmission standards selected in the various media. The FCC proposes to regulate only over-the-air standards.

- While different standards in the different media are not themselves harmful (and may have some beneficial effects for the media concerned) the proliferation of mutually incompatible receivers would have a strong negative effect and should be avoided by regulation of receiver performance standards.

- Many changes are in store for the TV industry. Some, such as fiber-optic transmission, may have even more far-reaching consequences than ATV, and deserve the careful attention of this Subcommittee.

The Economic Impact of Advanced Television Systems

As the NTIA's Darby Report shows, there is a potential for very large sales of HDTV equipment if this new medium takes hold and grows in the manner that has characterized other successful electronic consumer products, such as color television itself. Although there are many potentially profitable products that may be developed, and many businesses that may be affected, the overall domestic economic impact depends almost entirely on the total value added in the United States to receivers manufacturered here. If a large amount of American parts and labor go into HDTV receivers, the domestic impact will be positive; if we import more HDTV parts and equipment than we export, the impact will be negative. Since there is clearly no grass-roots demand for higher picture quality, and since the balance of trade and federal deficit are highly unsatisfactory at present, government action should encourage the development of HDTV only to the extent that there is a clear national gain in prospect.

The Influence of Standards on Growth of HDTV

The growth of HDTV will no doubt be affected by federal action on standards. If there were a single standard for all media, that would remove some uncertainty and would encourage all actors - broadcasters and equipment manufacturers alike - to move ahead with development, while if there are many standards or no standards, development is likely to be slower.

The government is not getting uniform advice on this matter. Generally speaking, broadcasting interests favor a single standard and alternate media prefer that each medium should be allowed to developed without inhibition. More important than the desirability of having a single standard is the fact that there is no entity that has the power to enforce one. The FCC has shown no inclination to regulate nonterrestrial standards. Cable and satellite interests have shown some sign of moving ahead with their own systems, and the Japanese allegedly will introduce MUSE or some other version of their 1125-line system via VCR's and monitors. The prospect of digital transmission by fiber-optic cable is waiting in the wings.

One of the problems with a variety of standards is the possible introduction into the marketplace of a number of different and mutually incompatible Advanced Television (ATV) receivers. If this happens, then the development of HDTV may be struck a serious, if not fatal, blow. There are several ways to avoid this problem. The FCC could mandate standards in all media and/or control receiver performance specifications to avoid mutual incompatibility. If the FCC does not have this power under existing law, Congress could give it such authority. The All-Channel Receiver Law is a good precedent.

Standards and the Likelihood of US Participation

A fact of life is that we have lost virtually all domestically owned consumer electronics companies. There are many reasons for this. An important factor was egregious dumping of Japanese TV sets while the US was effectively excluded from the Japanese market. Government agencies having other priorities failed to enforce, if they did not actually sabotage, the antidumping laws during a period when we were price-competitive. This sordid story is told in

detail in a report "The Decline of Consumer Electronics Manufacturing: History, Hypotheses, and Remedies,"[1] It provides many lessons to guide appropriate government action in the HDTV area.

The only possibility of substantial US participation in HDTV is a revival of consumer electronics, either by reentry of some American companies that once made receivers, or by entry from other industries, such as the computer or computer-graphics industry. This is most unlikely to happen if we select a standard developed outside the United States.

Historically, standards have been used to control market share. This was the case when most of Europe opted for the PAL color standard in 1965 rather than NTSC and certainly was the reason why France adopted SECAM at that time. It is the primary reason why Europe today is developing its own HDTV system under project *Eureka,* rather than accepting the Japanese system. I find it astonishing that some American entities should have endorsed the NHK studio standard in total disregard of the economic consequences.

Of course, an American-developed standard does not *guarantee* American participation, but a foreign standard effectively *excludes* American involvement. Aside from the question of patents, there is the learning curve. It is already difficult for US manufacturers to compete with modern Asian factories. It is much harder when our opponents have been at the game several years, have already made their mistakes, have developed the necessary special chips, and have set up their productions lines. If there is to be meaningful US participation, there is no alternative but to use a home-grown system. There are such systems - those of the Sarnoff Laboratories, NY Institute of Technology, and MIT. The North American Philips system was primarily developed here and would presumably be manufactured here, even though NAPC is wholly owned by its Dutch parent. Several other systems have also been proposed in the US and could be developed if funds were made available.

Potential Impact of Standards on the US Semiconductor Industry

In Japan, consumer electronics is the largest customer for the domestic semiconductor industry, and it is a relatively stable customer. Here, consumer electronics accounts for less than 10% of US semiconductor sales. Industrial and government sales, neither as stable as consumer electronics, must be relied upon to support our own manufacturers. This is a serious negative factor in the outlook for this industry. If we want a stable semiconductor industry for its own sake and as a matter of national security, no more effective move could be taken than to support domestic consumer electronics. TV receivers 'manufactured' in the US by foreign-owned companies import most of their semiconductors, and while any manufacturing is better than none, we must do the whole job to get the whole effect.

The Role of This Committee in HDTV Development

Historically, this committee of the House, in approaching issues of broadcast policy, has concerned itself primarily with the important questions of programming diversity, localism, and

[1]Available from Prof. D.H.Staelin, 26-341 MIT, Cambridge, Mass. 02139

the public interest in a free and open marketplace of ideas. The introduction of the next stage of ATV technology, however, raises a new set of issues and requires a new perspective on the traditional ones which, indeed, have not diminished in importance.

The new set of issues deals with the trade balance and national security ramifications of the next generation of high-resolution imaging technologies. Our research leads us to believe that the microelectronics that will be the basis of ATV systems will be closely linked to the technologies of computer displays, facsimile telecommunications, and display devices for aviation and defense applications. If the United States abandons consumer electronics as a lost cause, it may find out too late that a great deal more was at stake. We therefore commend the Subcommittee's decision to schedule hearings on the economic ramifications of HDTV and would be happy to share the results of our own research in this area with the Subcommittee and its staff.

We believe that the future of advanced television systems will require a fresh perspective on the traditional concerns of diversity and localism. In our judgment, these systems will soon incorporate much more than simply a few additional lines of visual information in each screen. They may well involve two-way television applications and will probably utilize broadband optical fiber networks. The delivery of television by fiber requires a fundamental rethinking of the distinction between broadcasting and point-to-point telecommunications. It is no accident that Bellcore and BellSouth are among the most active participants in research and development in HDTV.

Thus far the FCC has chosen to address only the spectrum-related aspects of advanced television systems. If the economic, trade, defense, and telecommunications elements of planning for the next generation of television are put off, it may be too late. We would urge the Subcommittee to exert leadership on this important question.

Conclusion

Advanced television systems have the potential to have a favorable effect on the economy. This result will not be produced without positive action by all concerned, including the US government. A US-developed system is required for, but does not guarantee, a favorable result. The proliferation of mutually incompatible ATV receivers could exert a strong inhibiting influence on the growth of the market, and should be prevented. Fiber-optic transmission may have a very large effect on the TV industry and should be carefully studied.

TAB

Video Transmission by Adaptive Frequency Modulation

William F. Schreiber
Julien Piot

0163-6804/88/0011-0068 $01.00 © 1988 IEEE

Introduction

In FM, the frequency of a carrier is modulated in direct proportion to a baseband signal [1]. This modulation method is used for television signal transmission and storage for two principal reasons: its relative immunity to unwanted amplitude variations, and its ability to exchange bandwidth and Signal-to-Noise Ratio (SNR). The former is the main reason for using FM in video tape recording, while the latter is of most importance in satellite transmission. The rf bandwidth is a complicated function of the signal and of the system parameters [2], being largest in the relatively busy image areas with high-contrast fine detail and smallest in the relatively blank areas. SNR in the demodulated signal is a function of the modulation index, which is proportional to the ratio of frequency excursion to input signal amplitude.[1] The index is made as high as possible to obtain the best noise performance in blank areas without undue distortion due to rf spectrum truncation in busy areas [3]. This tradeoff can be markedly improved, as will be shown, by adjusting the modulation index adaptively, greatly improving the noise performance in just those areas where the noise would otherwise be most visible.

It is well known that the visibility of noise of any kind depends very much on the local picture characteristics [4]. In a previous study, we found that in typical TV pictures, noise visibility was suppressed as much as 25 dB in the most complicated areas [5]. This may well be the main reason why mean-square error is an unsatisfactory measure of picture quality [6]. In the system to be described, the objective improvement is considerably smaller in the complex areas than in the simple ones, but the perceived improvement because of this phenomenon is nevertheless very high.

All adaptive modulation systems have the choice of either transmitting the adaptation information in a separate channel or deriving it from the received signal. In this system, the former procedure is used. The main advantage of the latter procedure is that no additional bandwidth is required. However, in this case the adaptation information requires very little channel capacity. Explicit transmission eliminates a certain amount of computation at the receiver. The most important reasons for separate transmission, though, are to ensure that adaptation is spatially isotropic, and to obtain optimum noise performance with minimum distortion.

Previous Systems for Improving FM for Video Signals

Several methods have been used in partially successful attempts to improve the tradeoff discussed above.

This article is a continuation of the special series on broadband systems, services, and terminals.

[1] The modulation index is normally defined as the ratio of frequency deviation to input signal bandwidth. What concerns us here is the gain of the frequency modulator itself.

Virtually all systems, even for audio applications, preemphasize the high frequencies before modulation and apply a complementary deemphasis after demodulation [7] [8]. A linear method [9] preemphasizes both the vertical and horizontal spatial high-frequency components. Several nonlinear methods have been used in which high-amplitude transients are emphasized less than low-amplitude transients, permitting a higher degree of preemphasis of the low-level detail [10]. In another nonlinear method, the amount of preemphasis is made to depend on the amplitude of the (preemphasized) signal, and in still another [11], the high-frequency components, principally the color subcarrier and its sidebands, are subject to nonlinear compression before modulation and nonlinear expansion afterwards (the entire process is called static companding), so that some noise is effectively shifted from areas of low-level detail to areas of high-level detail.

Essential System Concepts

- Two-channel processing

For maximum suppression of noise in blank areas, the signal must be very small so that a high degree of adaptation can be used. In the case of normal video signals, the blank areas can have any value from white to black. What is small in such areas is not the signal itself, but its variation about the local average value. "Average value" equates with the low-frequency component, while "variation" corresponds to the high-frequency component. Therefore, adaptive FM must be applied to the "highs", and not to the entire signal.[2] The "lows" can be transmitted by any available means.

Multichannel processing of video (or audio, for that matter) signals has a long history [12]. A common motivation is that the human visual system acts as though it were organized in spatial-frequency channels, with a different required SNR in each. Subjective considerations aside, it is clear that in any area where the highs component is low, the SNR can be improved by multiplying the highs by a factor greater than unity before transmission, and dividing by the same factor after reception, thus also reducing the effect of the added noise.

- Masking

The degree to which noise visibility is masked (i.e., its perceptibility is reduced) at each image point depends on the complexity in the spatiotemporal neighborhood, the effect naturally depending the most on the nearest image elements [6]. For NTSC TV pictures viewed at four times picture height, the effect extends about three to five picture elements (pels) in each direction and perhaps two or three frames back and one or two frames forward. This gives some idea of the required resolution of the adaptation information, which must be comparable to the extent of the masking effect. An important point is that this resolution is very much less than the picture resolution, especially if the neighborhoods are three-dimensional. Thus, the channel capacity required for the adaptation information is much less than that needed for the main signal.

- Avoiding block artifacts

Video signal space is divided into blocks, preferably three-dimensional (x,y,t), an adaptation factor being calculated for each block. The blocks are comparable in size to the range of the masking effect. The factor used at each pel is calculated from the block factors by linear interpolation, using the same interpolation filter at the transmitter and at the receiver. In this way, the modulation index varies smoothly from pel to pel, and no block artifacts are produced.

- Controlling the relative SNR in blank and busy areas

In normal image representation, additive noise is more visible in blank than in busy areas. In previous systems for improving SNR in video tape recording, the purpose of the nonlinear processing was to shift some of the noise from the blank to the busy areas. The adaptive modulation used in the present technique reduces the blank-area noise to such an extent in most cases that the relative visibility is reversed. For that reason, it is often helpful to perform nonlinear transformations before and after highs processing in the opposite sense (i.e., expanding the highs signal before modulation and compressing it afterwards). In this way, the overall perceived noise level can be decreased.

- Apportioning the saving between SNR and base bandwidth

Under typical conditions, nonadaptive FM results in the noise being quite invisible in busy areas and undesirably visible in blank areas. Adaptation usually reduces the blank-area noise more than is required. If desired, the maximum modulation index can be reduced, allowing either a narrower rf bandwidth for a given base bandwidth, or a wider base bandwidth for a given rf bandwidth. In satellite transmisssion, reduction of the rf bandwidth for a given base bandwidth also increases the Carrier-to-Noise Ratio (CNR), thus raising the threshold for impulse noise.

- Using more of the rf spectrum

One way to describe the inefficiency of ordinary FM for Video applications is to note that most of the time, the short-term spectrum falls far short of filling the rf bandwidth provided. This is due to the fact that the bandwidth depends on both the amplitude and the rate of change of the video signal. The modulation index must be chosen so that the worst case (sharp high-contrast edges) does not produce excessive distortion. This worst case occupies a rather small percentage of the total transmission time, leaving the channel nearly empty much of the time. With adaptive modulation of the highs, the proportion of the time that the channel is filled is much greater, indicating higher efficiency in using the spectrum.

[2] The signal may be divided into more than two components, with adaptive modulation applied to all the dc-free terms.

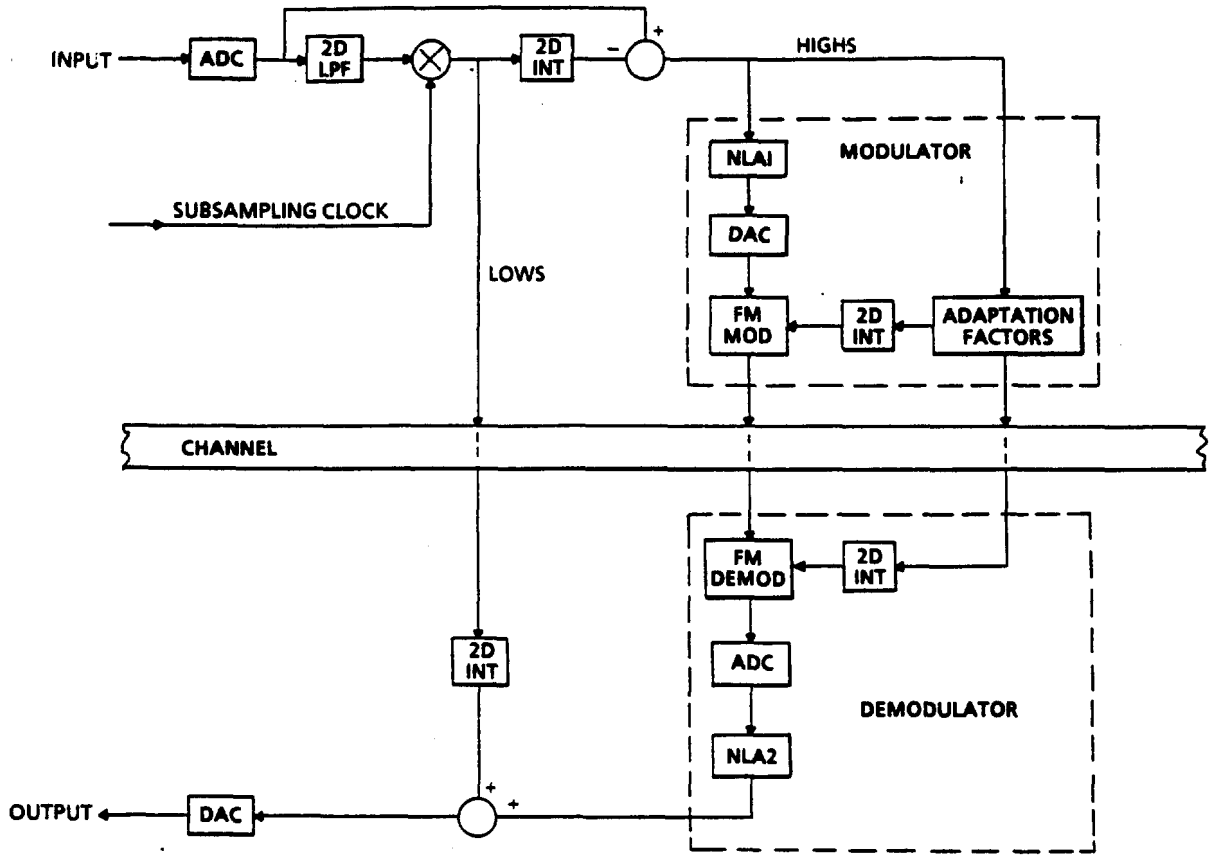

Fig. 1. Block diagram of the adaptive FM system for monochrome signals.

Deriving the Adaptation Factors

In the ideal case, a factor is used at each point, slightly less than one which would cause unacceptable distortion. At first glance, it might seem that an algorithm based on this principle might be awkward to carry out. A simpler method is a one-pass technique in which the factor is calculated from the sample values within the block. Values that can be used include the largest sample value, the largest pel-to-pel difference, or a combination of the two. The problem with this method is that no simple measure predicts the distortion very well, so that less-than-optimum performance is achieved.

A more elaborate method, which cannot be calculated in one pass, is to compute the spectrum, raising the index until a given percentage of energy is outside the passband. Still more elaborate is the method in which the demodulated signal is computed for each block and a measure taken of the distortion due to spectrum truncation. The index can be raised until the distortion is just short of some predetermined threshold.

The latter methods are recursive within each block, generally requiring four to six iterations.[3] Thus, they take considerably more time than the simple one-pass method first mentioned. The required number of iterations can be reduced, on the average, by starting with the final value in the corresponding block in the previous frame.

The most desirable method, which is very accurate and turns out to be quite rapid, is to perform the recursion on a frame-by-frame basis, in which case only one iteration is used for each block in each frame.

Clearly, in the fixed image areas, this method converges after a few frames to the same value as the block-recursive method, but it is much faster. At the boundaries of moving objects, this will not give as much accuracy. The accuracy may be improved by predicting the value for each block from a combination of nearby blocks in the previous frame(s).

Monochrome System

The principles discussed previously are applied to a monochrome system in Figure 1, where two-dimensional processing is shown for convenience, even though three-dimensional processing may be more effective in general. The input signal is digitized and processed by a low-pass filter. The filter output is subsampled to obtain the required signal. In both coder and decoder, the lows samples are interpolated back up to the original sampling grid. The interpolated lows are subtracted from the original signal to give the highs, which are then passed to the modulator. Adaptation factors are computed and transmitted, and also interpolated and used to control the FM modulator. As mentioned previously, the highs may be subject to a static nonlinearity for more precise control of the relative SNR in blank and busy areas.

[3] A logarithmic search might be used to speed up this procedure, rather than approaching the final value from one side. However, we have found that the interactions between blocks tend to cause instability in the recursion unless the final value is approached smoothly.

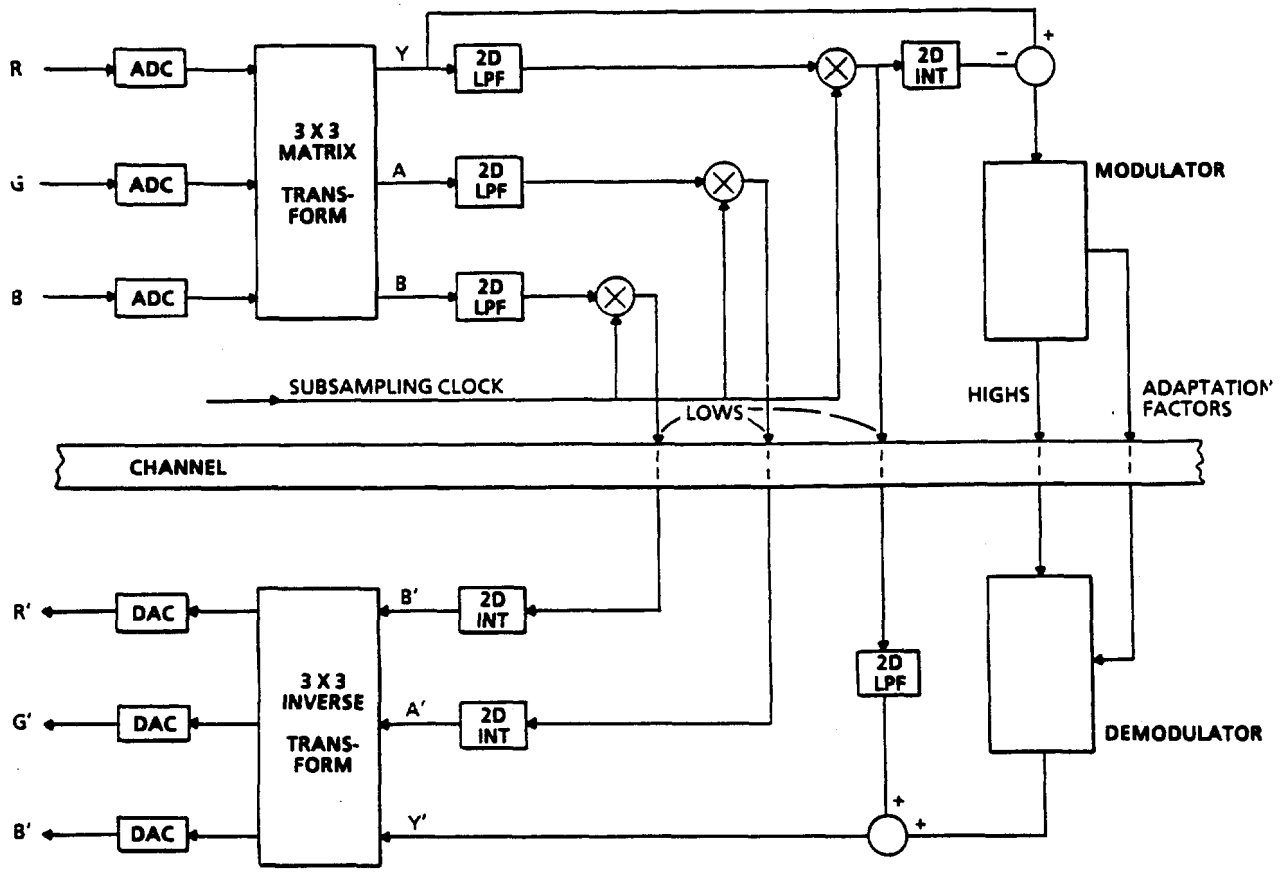

Fig. 2. Block diagram of the adaptive FM system for color signals.

Alternatively, but not shown, the highs may be multiplied by the adaptation factor before processing by the static nonlinearity. The resulting signal is then passed to a nonadaptive modulator. This process has a somewhat different effect at the boundaries of objects.

At the receiver (decoder), the highs signal is demodulated under control of the identical interpolated adaptation factor as at the transmitter, and is processed by a complementary static nonlinearity to produce an accurate representation of the highs signal of the transmitter. This is combined with the interpolated lows to give the reconstructed video.

Processing Color Images

The monochrome system can readily be extended to color signals using the arrangement of Figure 2. Here the input wideband *R-G-B* signals are digitized and converted into *Y-A-B* signals, where *A* and *B* are chrominance signals of any kind. The *Y* signal is divided into lows and highs, which are treated exactly as the corresponding monochrome signals in the previous section. The *A* and *B* signals are treated like the monochrome lows signal. This method is most suitable in cases where component color television signals are in use.

In cases where only composite color signals are available, the situation is somewhat less favorable. FM has what is known as a triangular noise spectrum (i.e., the spectral density of the noise is proportional to frequency) [13]. This is favorable for monochrome, since the visibility of high-frequency noise is less than that of mid frequencies. However, the high-frequency channel noise becomes low-frequency color noise after demodulation in composite systems. In recording systems with marginal SNR, such as consumer VCRs, it is therefore customary to remodulate the portion of the spectrum containing the color subcarrier and its harmonics onto a carrier below ("under") the main carrier, or to record it directly without a carrier. In professional VTRs, where demodulation and remodulation are avoided if at all possible, the signal is usually retained in its original composite form, with the recoding parameters chosen so as to give the desired overall performance.

In this system, composite signals may be treated exactly like monochrome signals. The division into lows and highs should be done in such a way that the entire chrominance spectrum is in the highs channel. Maximum signal amplitude (thus, minimum noise reduction) will occur in image areas of simultaneous maximum brightness and saturation. However, even there some noise reduction takes place, since the highs sig-

nals are not superimposed on the low-frequency luminance component. For signals of less than maximum brightness and saturation (which means for the vast majority of cases), additional noise reduction takes place. For neutral colors, maximum noise reduction is obtained, as for monochrome.

Computer Simulation

A frequency-modulated signal, like other analog signals, can be represented in a computer as a sequence of numbers, as long as the sampling theorem is satisfied. In this case, the modulated signal is the real part of the complex exponential

$$z(t) = Ae^{j\varphi(t)}$$

where

$$\varphi(t) = \int_{-\infty}^{t} k(\tau)x(\tau)d\tau + w_c t .$$

In this expression, $x(t)$ is the preemphasized luminance signal, or just its high-frequency component, and $k(t)$ is proportional to the time-varying modulation index. A further simplification is possible by setting the carrier frequency, w_c, to zero, which is legitimate with this formulation [14].

Although $z(t)$ theoretically has an infinite bandwidth, we can neglect the error due to aliasing if the sampling frequency is high enough so that the spectral density is sufficiently small at that frequency. This requires that the signal first be upsampled and interpolated [15]. Since the input signal is sampled at 8.4 MHz, we choose to upsample by a factor of at least 8. This gives a simulated sampling frequency of 67.2 MHz or more and effectively eliminates aliasing for narrowband FM.

The channel is modelled by a nearly ideal band-pass (in our case, low-pass) filter with additive white Gaussian noise. The linear-phase response of such a filter is admittedly only an optimistic approximation[4] of a real channel, but the amplitude response (in which the ringing is more than 50 dB down in the stop band) is sufficiently realistic.

Demodulation is achieved by computing the "instantaneous frequency"[5] of the noisy filtered version of $z(t)$

$$x'(t) = \frac{w'(t)}{k(t)} = \frac{1}{k(t)} \cdot \frac{d}{dt} arg(z'(t)) ,$$

as would be done in an ideal discriminator. The white noise component in $z'(t)$ induces triangular noise in the output, while the band-limitation of the filter induces distortion due to spectrum truncation. Deemphasis is then applied to obtain the final output. For a typical (nonstationary) picture, the distortion is a complex nonlinear function of the transient response of the channel, but the simulation accurately models whatever would occur in the equivalent hardware.

Integration and differentiation are modelled by summation and differencing, but this produces negligible error in this case [15]. Likewise, computation noise due to single-precision representation is much smaller than the simulated noise and thus can be neglected.

The parameters chosen for the simulation were not intended to be representative of any particular real system. The objective was primarily to make a valid comparison between the adaptive and nonadaptive methods. Real cases would have poorer phase performance at the channel boundaries and therefore worse distortion, no matter what modulation method was used. On the other hand, nonlinear clipping (coring) could probably be used to improve the performance in blank areas in all of the systems. We have attempted to make the comparison valid by ensuring that the peak distortion was the same in all cases.

Simulation Results

Two of the many possible implementations of this adaptive scheme were simulated and are illustrated below and compared with conventional nonadaptive FM. All systems use the same channel bandwidth and involve the same peak distortion due to band limiting.

A typical satellite transmission requires an rf bandwidth of 24 MHz and a CNR of 12 dB. In order to clearly demonstrate the improvement due to adaptation, a bandwidth of only 10.5 MHz is allocated for both the adaptive and nonadaptive schemes in the simulation.

Nonadaptive System — The modulation index for the nonadaptive system is chosen so that the distortion due to spectrum truncation in the vicinity of sharp high-contrast edges is just tolerable. (Some distortion in such areas is required in order to achieve the best noise rejection in relatively blank areas.) The peak distortion is the same for all systems. Distortion is measured by the difference between the input and output signals in 4 × 4 blocks. It is limited to a root-mean-square (rms) value of 6% of the peak-to-peak signal in the worst case: a full-amplitude narrow vertical line. In the nonadaptive case, 6% distortion is obtained for a peak-to-peak deviation of 840 kHz. Typical picture material produces a distortion measure of no more than 2.5% with this choice of index. The original picture and the output of the nonadaptive system are shown in Figures 3a and 3b, respectively.

Single-Pass Algorithm — In a complete system, some bandwidth must be assigned to the lows and to the adaptation data. A wide variety of methods can be used to transmit these signals. Multiplexed Analog Component (MAC) schemes seem attractive, for instance. In this example, 2.1 MHz, or half the base bandwidth, is

[4] Of course, this approximation is used for the comparison nonadaptive system as well.

[5] Instantaneous frequency is a physically useful but mathematically dubious concept. In FM systems, what is important is the physical characteristic of a particular modulator and a particular demodulator, which will always be just approximations to the ideal devices.

(a)

(b)

(c)

Fig. 3. Computer simulation of two FM systems. (a) Original. (b) Nonadaptive FM system. (c) Single-pass adaptive FM system. The picture size is 256 × 256. The total rf bandwidth is 10.5 MHz and the CNR is 11 dB.

(a)

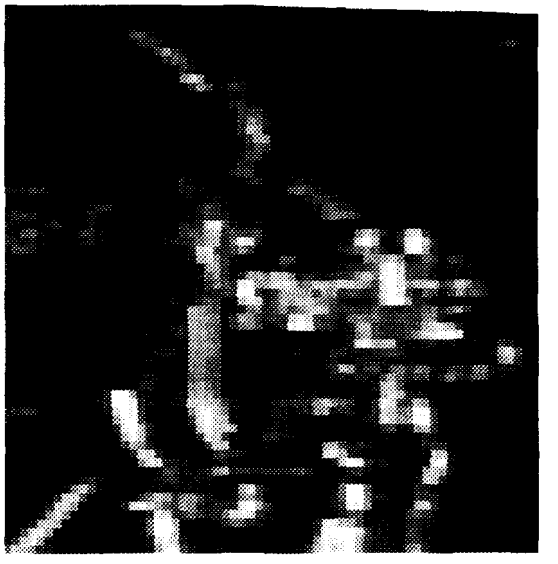

(b)

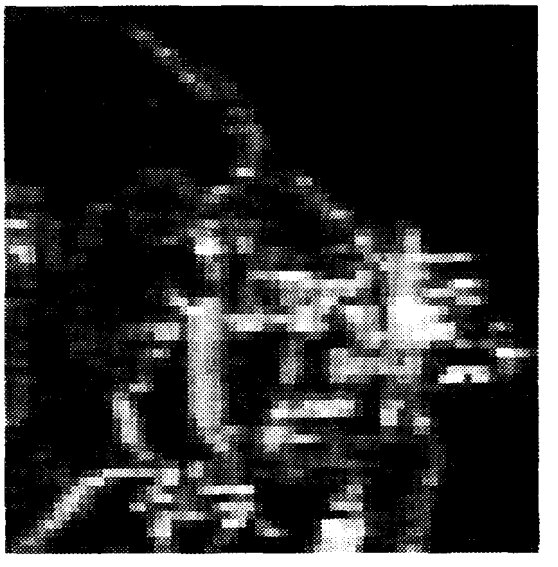

Fig. 4. Bandlimiting distortion in a block of 4 × 4 pixels of the two systems in Fig. 3. Black = 0% and white = 3%. (a) Nonadaptive FM. (b) Single-pass adaptive FM.

allocated for these signals, leaving 8.4 MHz for the modulated highs. A frequency deviation of 370 kHz gives a worst-case distortion of 6% for this narrower bandwidth.

This algorithm involves multiplying the samples within a 4 × 4 block by an adaptation factor chosen so that the largest resulting sample reaches a predetermined maximum value. Although this is a very simple-minded scheme, it nevertheless decreases the noise in blank areas below the level of visibility (i.e., more than necessary). Advantage can be taken of this result by introducing a degree of negative companding, which effectively shifts some noise from busy to blank areas. The noise is still noticeable near edges, so that the result is not yet satisfactory (as shown in Figure 3c).

The maximum distortion measured with the sample picture is 2.8% rms, since the worst case never occurs in natural images (although it might with computer-generated graphics). However, as shown in Figure 4,

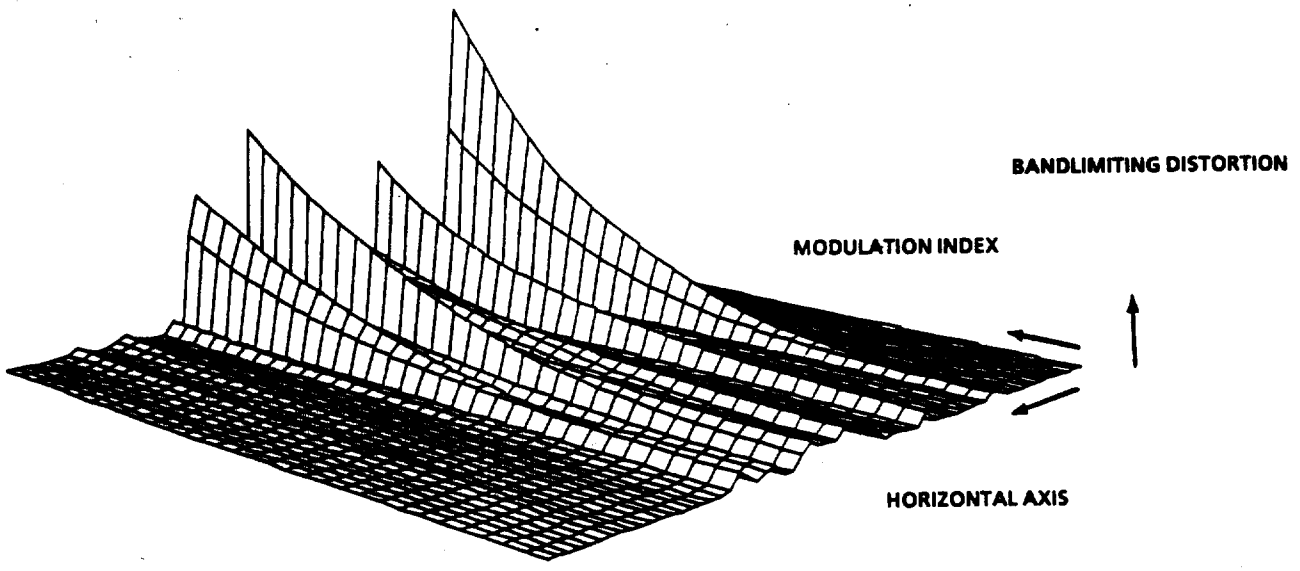

Fig. 5. Bandlimiting distortion measured in every block across the picture width as a function of the modulation index.

this peak distortion does occur much more often with the adaptive than with the nonadaptive system, showing the effectiveness of the method in filling the channel.

The iterative algorithm — This method updates the adaptation factor in each block based on the factors and resulting distortion occurring in the corresponding block in the two previous iterations. These iterations can take place within a single frame or, in the preferred method that has not yet been simulated, within a short sequence of frames. Linear interpolation is used to calculate a new factor that would be expected to produce the predetermined distortion if the relationship between distortion and modulation index were linear. Because of the convexity of the actual relationship, the distortion grows rapidly as the index is raised. This is shown in Figure 5, where the distortion is displayed. For this reason, a smaller increment is used on each iteration to ensure stability of convergence.

Although this algorithm is recursive, it converges rapidly, typically requiring only four or so iterations to reach the desired value. However, it does require modelling the modulation, channel bandwidth limitation, and demodulation, in order to calculate the distortion. In a real system (as opposed to the computer simulation), a rather small amount of hardware (some of which is required in any event) would suffice to implement this technique.

In Figure 6, the output picture is shown after the first guess at the index, after two iterations, and after four iterations. The distortion in these three cases is also shown. The target peak distortion in this case is 2%, and is exceeded at a few points. It is clearly shown t when the index is fully adapted, the target distortion is reached much more often. This is highly desirable, since that indicates efficient use of the channel.

Conclusions

The size of the images used in the simulation is 256 × 256, which is about half that (1/4 the area) of normal NTSC pictures. Therefore, they should be viewed from twice the normal distance. Although noise visibility is different in paper prints as compared with the TV screen, the results clearly show the kind of improvement in performance that can be attained with adaptation. Due to the rather narrow bandwidth used, the nonadaptively processed image is degraded by a large amount of noise. Even though triangular noise is less visible than white noise, it is still clearly visible in the blank areas.

In the single-pass adaptive case, the most noticeable noise is close to the edges (rather than in the blank areas), but not close enough to be completely masked. This would be improved somewhat in a 512 × 512 image with 4 × 4 blocks, as the latter would be perceived to be smaller, and the adaptation would be more accurately attuned to the local image character. In this case, negative companding of the form

$$y(t) = (x(t))^n ,$$

where n is 0.8, was applied. Other companding functions might have done a better job of shifting noise from busy to blank areas.

A substantial improvement is noted in the recursive case; the final image is essentially indistinguishable from the original. If used with some technique for "click" concealment [16], a system of this type could work satisfactorily for NTSC transmission with an rf bandwidth of about 13 MHz and a CNR lower than 12 dB and possibly as low as 9 dB, both parameters being well below those normally required. Although we have not yet done a proper simulation of a video tape channel [17], the performance of the system at rather low

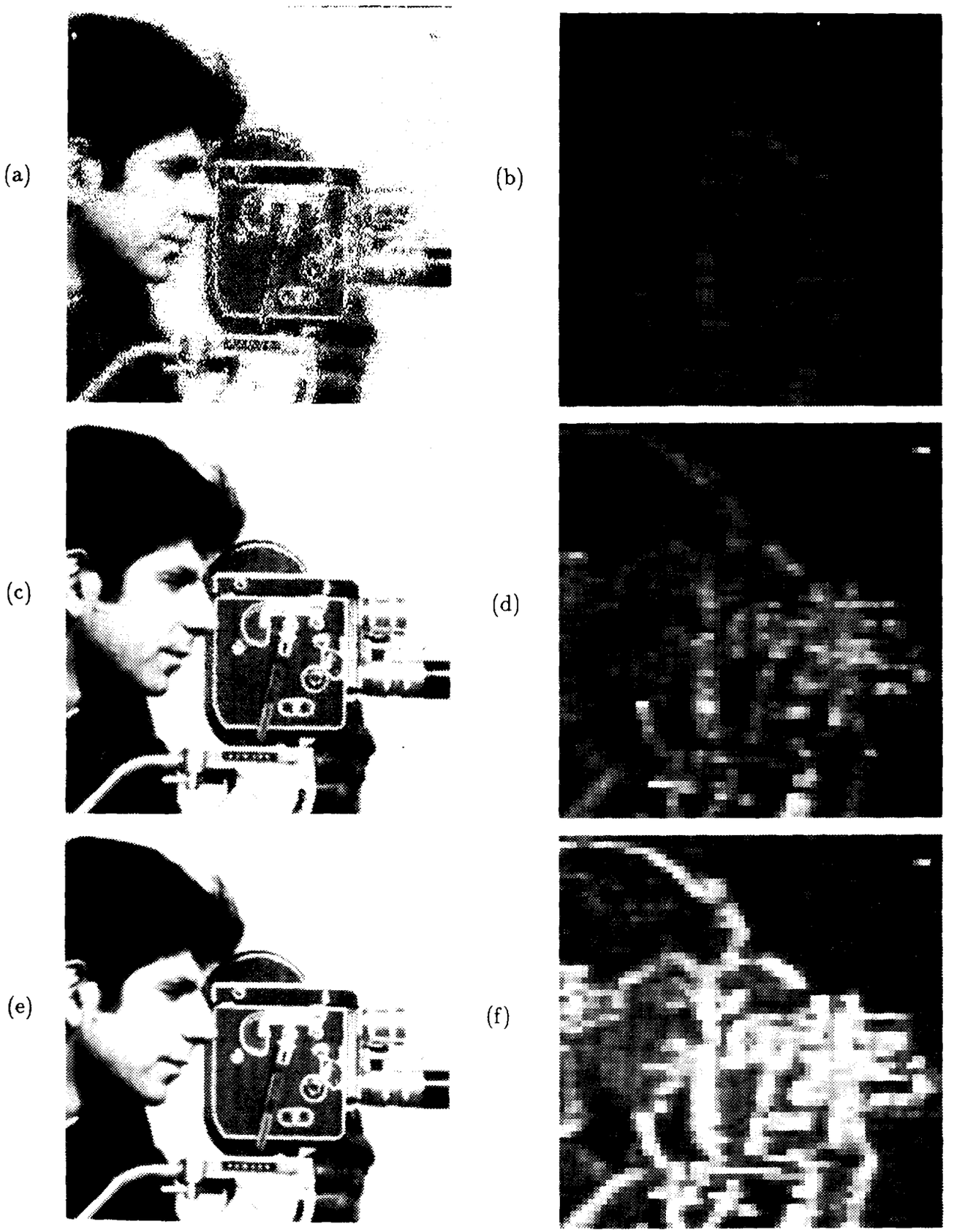

Fig. 6. Adaptive FM system using the iterative algorithm. (a) Initial guess. (b) Corresponding bandlimiting distortion. (c) Second iteration. (d) Bandlimiting distortion of second iteration. (e) Fourth iteration. (f) Distortion of fourth iteration. The total rf bandwidth is 10.5 MHz and the CNR is 11 dB. Black = 0% distortion, white = 3% distortion.

values of modulation index makes it appear that adaptive FM may also be useful in that application, both for reducing tape requirements in normal applications and in increasing the base bandwidth for HDTV record-

References

[1] E. H. Armstrong, "A Method of Reducing Disturbances in Radio Signaling by a System of Frequency Modulation," *Proc. IRE*, vol. 24, May 1936.

[2] N. Abramson, "Bandwidth and Spectra of Phase-and-Frequency-Modulated Waves," *IEEE Trans. On Commun. Sys.*, Dec. 1963.

[3] C. L. Ruthroff, "Computation of FM Distortion in Linear Networks for Bandlimiting Periodic Signals," *Bell. Syst. Tech. J*, vol. 47, no. 6, July–Aug. 1968.

[4] W. F. Schreiber, *Fundamentals of Electronic Imaging Systems*, Berlin-Heidelberg: Springer Verlag, 1986.

[5] W. F. Schreiber and R. R. Buckley, "A Two-Channel Picture Coding System: II-Adaptive Companding and Color Coding," *IEEE Trans. On Commun.*, vol. Com-29, no. 12, Dec. 1981.

[6] A. N. Netravali and B. Prasada, "Adaptive Quantization of Picture Signals Using Spatial Masking," *Proc. IEEE*, vol. 65, no. 4, pp 536–548, Apr. 1977.

[7] B. G. Cramer, "Optimum Linear Filtering of Analog Signals in Noisy Channels," *IEEE Trans. on Audio and Electroacoustics*, vol. AU-14, no. 1, Mar. 1966.

[8] T. Furuhata, M. Hamaguchi, H. Owahi and Y. Yumde, "Linear Phase Emphasis Networks with Gaussian Function," *IEEE Trans. on Broadcasting*, vol. BC-33, no. 1, Mar. 1987.

[9] A. Hirota *et al.*, "Noise Reducing System for Video Signal," USP 4,607,285

[10] A. Hirota *et al.*, "Noise Reducing System for Video Signal," USP 4,618,893

[11] L. Pham van Cang, "Circuit for Processing a Color Television Signal," USP 4,007,483

[12] D. E. Troxel, *et al.*, "A Two-Channel Picture Coding System," *IEEE Trans. on Comm.*, vol. COM-29, no. 12, pp 1,841–1,848, Dec. 1981.

[13] J. M. Wozencraft and I. M. Jacobs, *Principles of Communications Engineering*, New York: Wiley, 1968.

[14] A. Papoulis, "Random Modulation: A Review," *IEEE Trans. On Acoustic, Speech, and Signal Processing*, vol. ASSP-31, no. 1, Feb. 1983.

[15] L. C. Palmer and A. Shenoy, "Simulation of TV Transmission Over the Communications Satellite Channel," *IEEE Trans. On Commun.*, vol. Com-34, no. 2, Feb. 1986.

[16] S. Perlman, S. Eisenhandler, P. W. Lyons, and M. J. Shumila, "Adaptive Median Filtering for Impulse Noise Elimination in Real-Time TV Signals," *IEEE Trans. On Commun.*, vol. Com-35, no. 6, June 1987.

[17] R. W. Wood, "Magnetic Recording Systems", *Proc. of the IEEE*, vol. 74, no. 11, Nov. 1986.

Bibliography

G. Chouinard and J. N. Barry, "NTSC and MAC Television Signals in Noise and Interference Environments," *J. SMPTE*, Oct. 1984.

A. P. Gallois and A.M.Bock, "Compatibility of Video and Data Signals on the See Satellite Television Channel," *IEEE Trans. on Broadcasting*, vol. BC-33, no. 3, Sept. 1987.

A. V. Oppenheim and R. Shafer, *Digital Signal Processing*, Englewood Cliffs, NJ: Prentice-Hall, 1975.

William F. Schreiber attended the New York City public schools and Columbia University, where he received the B.S. and M.S. in electrical engineering. In 1953, he received the Ph.D. in applied physics at Harvard University, where he was a Gordon McKay and Charles Coffin fellow.

He worked at Sylvania from 1947 to 1949 and at Technicolor Corporation in Hollywood from 1953 to 1959. Since then, he has been a faculty member at the Massachusetts Institute of Technology, where he is now Professor of Electrical Engineering and Director of the Advanced Television Research Program. He was visiting professor of electrical engineering at The Indian Institute of Technology, Kanpur, India, from 1964 to 1966, and at INRS-Telecommunications, Montreal, Quebec, from 1981 to 1982. Since 1948, Dr. Schreiber's major professional interest has been image processing. He has worked in graphic arts, including color processing and laser scanner design, in facsimile, and in television. This work has included theory and practical applications.

Dr. Schreiber is a Fellow of the IEEE, an Honors Award recipient of the Technical Association of the Graphic Arts, and has twice received the Best Paper Award of the SMPTE Journal.

Julien Piot was born in Bangalore, India in 1960. He received the Dipl.El.-Ing degree from the Swiss Federal Institute of Technology, Lausanne, Switzerland, in 1983.

From 1983 to 1986, he worked in the Digital Audio Lab of Willy Studer A.G., Regensdorf, Switzerland, where he developed a new type of equalizer for digital magnetic recording. In 1986, he joined the Advanced Television Research Program at the Massachusetts Institute of Technology, Cambridge, MA, where he is currently working toward the Ph.D. degree in electrical engineering and computer science.

Mr. Piot holds several patents in the field of digital magnetic recording.

He would like to express his appreciation to the Swiss National Fund for Research, Hascom (Switzerland), and Brown Bovery Corporation, Switzerland, which supported part of this work. ■

TAB

wfs54

Possible Federal Actions to Support ATV

Very Low or No Cost

1. **Withdraw US government support for the NHK production standard.** Such support, if ever in our interests, is certainly not in our interests now.
2. **Regard with suspicion advice tendered by organizations in which foreign-owned companies have an important voice,** such as ATSC and EIA.
3. **Make takeovers and leveraged buy-outs more difficult,** particularly in vital industries. (Example: GE/RCA) E.g.: interest on money borrowed for takeovers should not be a legitimate business expense; officers of companies should not be able to dismember corporations in order to line their pockets.
4. **Enforce the antidumping laws.** If Japanese companies are selling TV's at no profit in the US, but at high profit in Japan, that should be defined as dumping. Make foreign components used in foreign-owned US factories subject to these laws.
5. **Set national priorities** independent of special concerns of small industries, but only in view of the overall benefit to the economy.

Low Cost

1. **Organize a high-level adequately staffed study** with *all* interests represented, including industry, government, academia, labor, public.
2. **Decide on a definite scenario for the development and introduction of ATV,** including the phasing out of NTSC, with full consideration of economic factors. Establish ATV receiver compatibility standards to prevent both a premature defacto standard and a multiplicity of mutually incompatible receivers appearing in the market. This is unlikely to be done successfully within the FCC Advisory Committee, as the wrong people (or at least not enough of the right people) are involved, and because the FCC does not seem to think it ought to consider economic factors outside the broadcasting industry.
3. **Fund a number of small R&D programs,** particularly for systems development.
4. **Provide funds for relevant federal agencies** to inform themselves of what is going on (especially FCC).
5. **Coordinate federal TV activities in** DOD, NASA, FAA, Commerce, FCC, OTR, NITS, etc. Perhaps government agencies could themselves be a signficant guaranteed market for the first US-produced ATV systems.

Higher Cost

1. **Improve the climate for long-range investment in product development,** for example by favorable tax treatment. In special cases, guarantee development loans at favorable interest rates. Provide matching funds for important product and technology developments.