ANNUAL CAPITAL INVESTMENT IN HD EQUIPMENT

$ MILLIONS*

GROUP 4 - 160 STATIONS

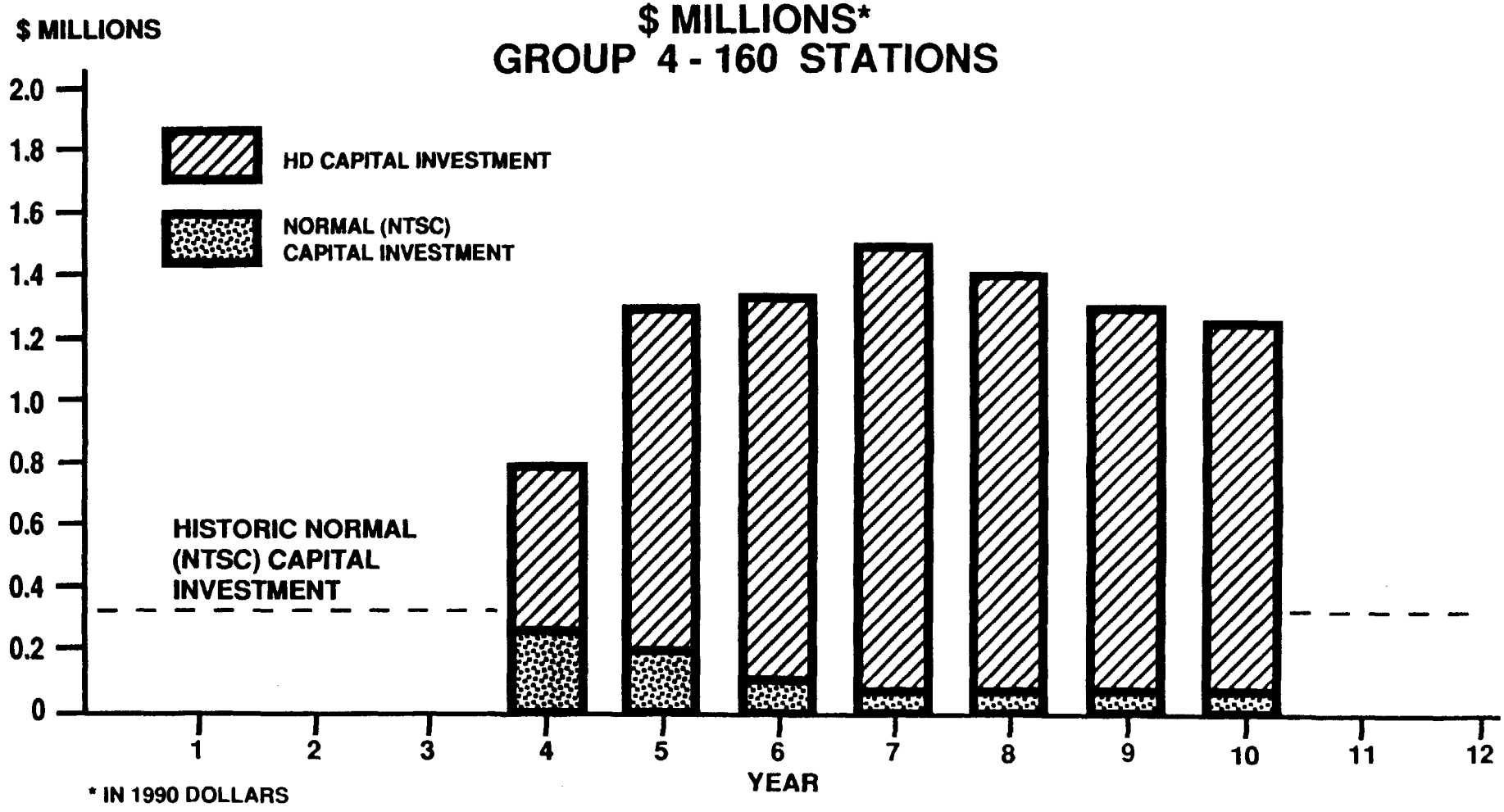

* IN 1990 DOLLARS

FIGURE 8

ANNUAL CAPITAL INVESTMENT IN HD EQUIPMENT

$ MILLIONS*

GROUP 5 - 320 STATIONS

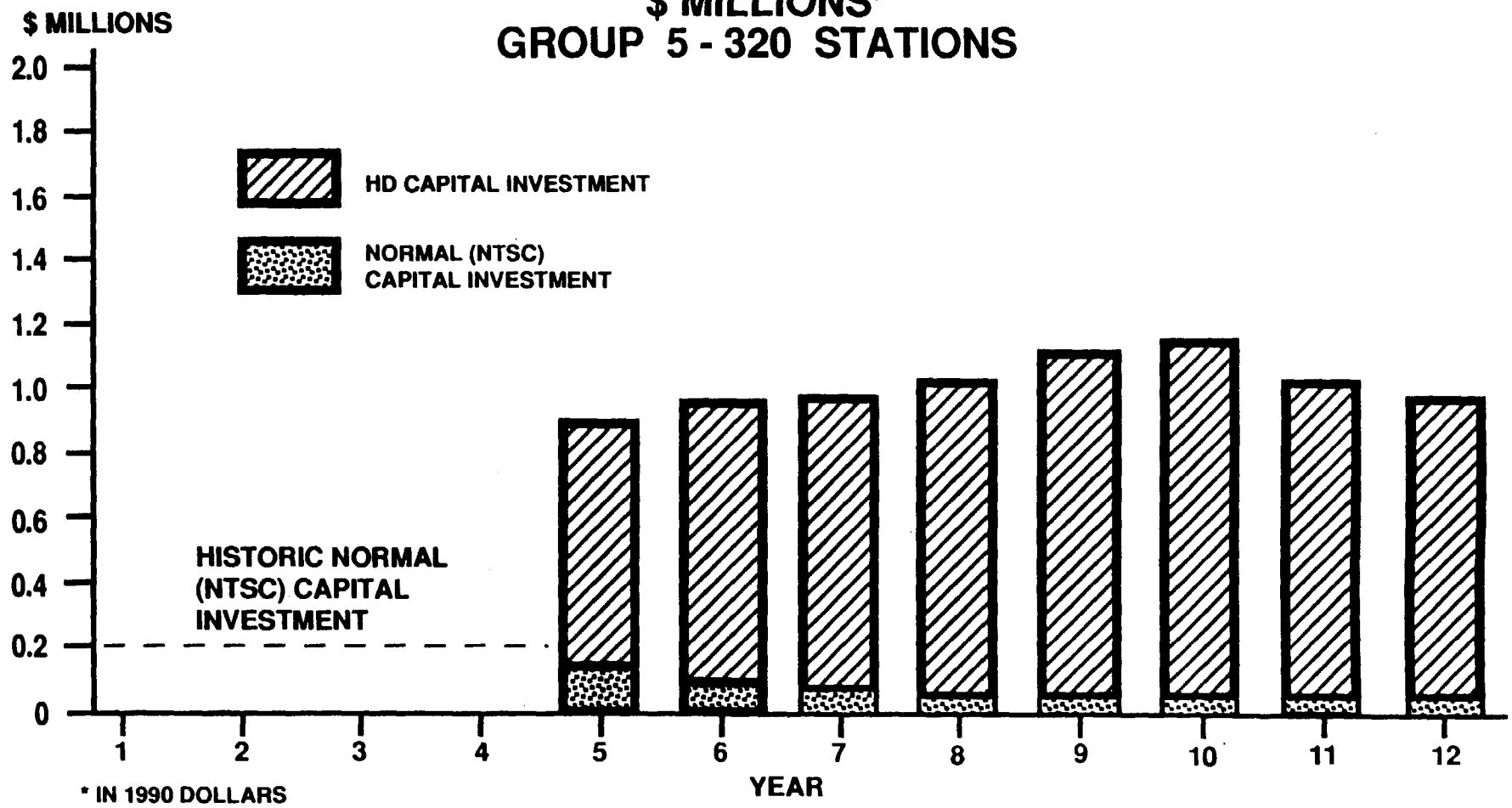

* IN 1990 DOLLARS

FIGURE 9

capital investment in NTSC equipment, which is assumed to be $1.0 million per year, or $5.0 million over the five-year conversion period. Thus the incremental cost of conversion, based on these assumptions, is 11.6 million less $5.0 million, or 6.6 million, plus the remaining cost (2.3 million) of maintaining some NTSC equipment during the conversion, shown in Figure 5. This analysis produces a total incremental cost of $8.9 million.

For the 40 stations in Group 2, the total capital investment in HD equipment is $10.4 million, (Fig. 4), and the historic level of capital investment in NTSC equipment is $0.5 million per year (Figure 6). The total net incremental cost for a station in this group is then $10.4 - (6 X 0.5) = $7.4 million, to which must be added the remaining NTSC equipment cost of $1.2 million, for a total of $8.6 million.

For the 320 stations in Group 5, whose total capital investment in HD equipment is $7.6 million, the net incremental cost of the transition is found to be $6.6 million. These projections are presented in Figure 10.

For all the 630 stations included in Groups 1-5, the average capital investment in HD equipment is $8.4 million per station, while the average total incremental cost over the assumed capital investment in maintaining and updating NTSC equipment is $6.3 million per station, to which must be added the remaining $0.8 million cost of maintaining some NTSC equipment during the transition, for a total net incremental cost of $7.1 million.

6.2. Capital Depreciation Charges

The impact of capital depreciation charges against revenues during the conversion period is significant. Assuming a 5-year straight line depreciation rate for HD equipment, the total depreciation charges for the

INCREMENTAL CAPITAL COST OF HDTV EQUIPMENT PER STATION

$ MILLIONS*

STATION GROUP	NO. OF STATIONS	HD EQUIPMENT CAPITAL INVESTMENT	HISTORIC NTSC CAPITAL INVESTMENT DURING TRANSITION PERIOD	REMAINING NTSC INVESTMENT DURING TRANSITION	NET INCREMENTAL CAPITAL COST
1	30	11.6	5.0	2.3	8.9
2	40	10.4	3.0	1.2	8.6
3	80	9.4	2.8	0.9	7.5
4	160	8.4	2.1	0.75	7.05
5	320	7.6	1.6	0.55	6.55

* IN 1990 DOLLARS

FIGURE 10

630 stations considered amount to $2,837 million, or an average total depreciation charge of $4.5 million per station. For tax purposes, this reduces the average total net cash flow for the acquisition of HD equipment to $3.9 million per station, considering only the period of conversion. Additional depreciation charges will, of course, be taken in the five years following the last year of the conversion program.

7. TRANSITION SCHEDULES

Each station is expected to implement its transition to HDTV over a period of several years, thus spreading the capital investment required over a period of from five to nine years, depending upon marketplace and competitive considerations.

The first stations to introduce HDTV service will probably be large stations in the top television markets. These are likely to be followed by stations in progressively smaller markets.

For example, the transition schedule may follow the pattern shown in Figure 11. Starting in Year 1, with the first group of 30 stations to convert, all of which serve the top ten television markets, the number of television households served, and the percentage of all TV households (TVHH), are presented.

Assuming this scenario, each group of stations will take several years to implement full conversion, with the first group of 30 stations taking 5 years, and the last Group 6 of 640 stations, many of whom will be in smaller markets, completing the conversion in 9 years. In this scenario, the timing of conversion for each group is shown in Figure 12.

HDTV TRANSITION SCHEDULE

START YEAR	GROUP NO.	STATIONS EQUIPPED	MARKET RANKINGS SERVED	TV HOUSEHOLDS SERVED (MILLIONS)	PERCENT TVHH SERVED
1	1	30	1-10	28	31
2	2	+40=70	1-30	48	53
3	3	+80=150	1-100	76	83
4	4	+160=310	1-150	84	95
5	5	+320=630	ALL	88	98
6	6	+640=1270	ALL	90	100

FIGURE 11

HD CONVERSION SCHEDULE BY PHASES FOR EACH GROUP OF STATIONS

GROUP	STATIONS	% TVHH
1	1–30	31
2	31–70	53
3	71–150	83
4	151–310	95
5	311–630	98
6	631–1270	100

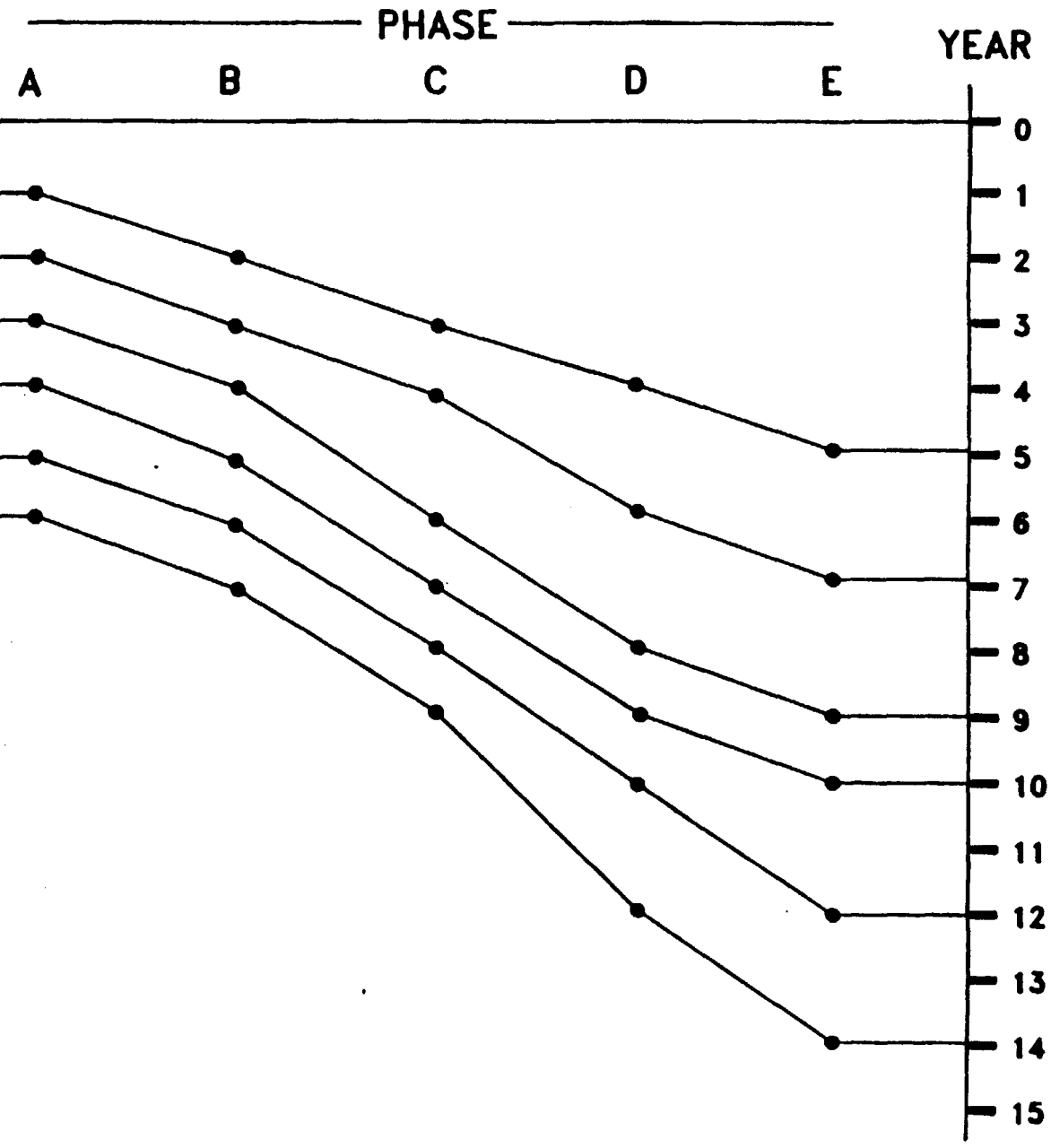

FIGURE 12

Figure 12 shows, for example, that when Group 2 has reached Phase D of the transition in the sixth year, 53% of television households will have HDTV service available, while in the eighth year, when the 160 stations in Group 3 have achieved Phase D, 83% or 76 million households will have HDTV service available.

The last Phase (F) of conversion to high definition electronic news gathering is not shown, because many stations may defer this phase for some years, as discussed previously.

8. CONCLUSIONS

At this point in the study, the following working premises are put forward for industry discussion.

(i) Phasing the transition to simulcast HDTV over several years is essential so that stations can time and pace their transition program based on their financial capacity and marketplace considerations. Such a transition scenario appears feasible.

(ii) The transmitter power for HDTV broadcast will be much less than for a NTSC transmitter, and the transmitting antenna will thus be smaller than its NTSC variant. New tower requirements for HDTV broadcast will therefore be minimal.

(iii) Equipment costs will decline significantly over the period of industry conversion to HDTV broadcasting.

(iv) The total capital investment required for transition to simulcast HDTV may range from $11.6 million for major market stations converting early to $7.6 million for small market stations converting later.

(v) The incremental capital investment required for the transition to simulcast HDTV may range from $9 million for major market stations to $7 million for small market stations.

These projections of capital cost are presented in Figure 13.

SIMULCAST HIGH DEFINITION TERRESTRIAL BROADCAST CAPITAL INVESTMENT REQUIRED
$ MILLIONS

	GROUPS OF STATIONS ACQUIRING EQUIPMENT				
GROUP	1	2	3	4	5
NO. OF STATIONS	30	+40=70	+80=150	+160=310	+320=630
% TVHH SERVED	31	53	83	95	98
A - TOTAL CAPITAL COST PER STATION	11.6	10.4	9.4	8.4	7.6
B - TOTAL INCREMENTAL COST OVER HISTORIC NORMAL NTSC CAPITAL COST	8.9	8.6	7.5	7.1	6.6

* IN 1990 DOLLARS

FIGURE 13

APPENDIX A

Towers for Simulcast Advanced Television Systems

The following is a memorandum submitted by Jules Cohen and Associates, PC., to Specialist Group 10 of the Planning Subcommittee's Working Party 3, dated June 19, 1990.

"In estimates of the cost of initiating an Advanced Television System (ATV), a major item often included is a new tower. A survey of technical directors of television stations yielded the conclusion that, in the judgment of the technical directors, a substantial number of stations would require new towers to accommodate an additional antenna for ATV. For the reasons given below, new tower requirements are believed to have been exaggerated.

The ATV system adopted for terrestrial transmission will have to be of such nature that it can be located at 100 to 120 miles from a co-channel NTSC broadcast station without causing interference to reception of the NTSC station to a degree any greater than co-channel NTSC stations now cause to each other when spaced in the order of 180 miles. Inherent in that requirement is the need for the ATV station to provide satisfactory service to a substantial area while using less effective radiated power (ERP) than the equivalent NTSC station. Lower ERP can mean not only smaller transmitters, but also smaller antennas and smaller diameter coaxial cable than its NTSC counterpart.

Smaller antennas and cables reduce the weight required to be hung on a tower, but even more important, the smaller antennas and cables reduce the wind load. A tower not capable of carrying double its present load may very well be capable of accepting a lesser load without excessive derating.

Prior to adding anything other than a trivial load to a tower, a stress analysis is necessary. Such analyses are likely to cost in the range of six to fifteen thousand dollars. Upon completion of the stress analysis, the tower owner is advised of what members, if any, in the tower would be over stressed if the new load is added. Substantial overloading of a large number of members will mean that the tower must be replaced. However, experience with similar situations indicates that the excessive stress is more often than not confined to a relatively small number of members.

In the instance where the number of tower members needing attention is not excessive, the members can be replaced or reinforced. Sometimes the requirement is as simple as adding a second steel angle back-to-back with the steel angle already in place. Sometimes one or more guy levels must be supplied with larger diameter guys, or an additional group of guys provided at a new level, perhaps with other guys being repositioned.

Strengthening an existing tower is much less costly than building a new tower. Even a fairly extensive amount of work can be accomplished within a one hundred thousand dollar budget. Furthermore, that work can usually be accomplished without disrupting the station operation.

Quite obviously, all existing towers cannot be subjected to a stress analysis at this time to arrive at a more realistic cost figure for the ATV conversion. However, experience dictates a conclusion that relatively few stations would have to resort to tower replacement as a condition for adding a simulcast ATV channel."

APPENDIX B

HIGH DEFINITION TELEVISION

Member/PBS Transition Planning

Introduction

Each television station in America has a different station configuration and is in a unique competitive situation. Each station will have to examine its own situation in light of the many factors in order to decide what role it wants to play in the area of Advanced Television.

This document attempts to present some rudimentary and preliminary cost factors that will help stations to estimate the expense to add an ATV simulcast system. This is intended to be a shopping list with some basic groupings so that station general, financial, production and engineering managers can begin to develop long range strategies which would allow a manageable and graceful transition into ATV.

Much has been made in recent times about the high costs of advanced television. What has not been discussed is that these investments can be made over a many year period. Also not stated is that many of the high costs can be attributed to high research and development costs that must necessarily be absorbed through initial product sales. As time goes on, the technology of manufacturing and the equipment itself will improve and the costs will go down. Finally, costs generally refer to wide bandwidth major studio production equipment. As ATV develops, new more limited bandwidth equipment will need to be developed for local broadcast stations so that it can be produced at a lower cost. A few items of such equipment are already beginning to appear at HDTV trade shows. Others are now being discussed by equipment manufacturers and PBS is urging these manufacturers to complete the development of such products.

I. Tower Site/System

A. New Tower Site:

Land (50 acres)	$500K
Site Development	$100K
Access Road	$900K
Soils and Survey	$10K
Electric (substation and generator)	$400K
Tower & Installation (1000')	$500K
Total	$2,410K

B. Existing Tower Site, New Tower:

Access road	$150K
Soils and survey	$10K
Electric (substation and generator)	$400K
Tower & Installation (1000')	$500K
Total	$1,060K

C. Existing Tower Site, Existing Tower:

Major modifications	$100K

D. Existing Tower Site, Existing Tower:

Minor modifications	$10K

II. Transmitter Building

A. New building(1500 sf)	$113K
B. Existing building, addition(500 sf)	$38K
C. Existing building, minor modifications	$10K

III. Legal Consultation

A. No dedicated action	$5K
B. Complaints, no court action	$50K
C. Complaints, court action	$500K

IV. Engineering Services

A. Antenna systems design	$36K
B. FAA & FCC Application/Followup	$50K
C. Tower Application/Followup	$8K

V. Transmission Plants

A. VHF Low Band Transmission Plant, 10KW ERP, with:

Transmitter - 2 KW, Installed	$150K
HDTV Encoder (or Format Converter/Modulator)	$100K
Remote control system	$30K
Antenna	$250K
Transmission line (1000')	$50K
Antenna/Line Installation Services	$50K
Test Signal Inserter	$26K
Test Equipment	$65K
Precision Demodulator	$22K
Demultiplexer	$15K
HD Color Monitor 14"	$11K
HD Precision Waveform Monitor	$12K
HD Signal Monitor	$20K
Audio Processing	$6K
Audio Monitoring	$10K
Total	$817K

B. VHF High Band Transmission Plant, 30 KW ERP, with:

Transmitter - 5 KW	$200K
HDTV Encoder (or Format Converter/Modulator)	$100K
Remote Control System	$30K
Antenna	$250K
Transmission line (1000')	$50K
Antenna/Line Installation Services	$50K
Test Signal Inserter	$26K
Test Equipment	$65K
Precision Demodulator	$22K
Demultiplexer	$15K
HD Color Monitor 14"	$11K
Precision WM	$12K
HD Signal Monitor	$20K
Audio Processing	$6K
Audio Monitoring	$10K
Total	$867K

C. UHF Transmission Plant, 150 KW ERP, with:

Transmitter - 20 KW	$300K
HDTV Encoder (or Format Converter/Modulator)	$100K
Remote Control System	$30K
Antenna	$250K
Transmission line (1000')	$80K
Antenna/Line Installation Services	$50K
Test Signal Inserter	$26K
Test Equipment	$65K
Precision Demodulator	$22K
Demultiplexer	$15K
HD Color Monitor 14"	$11K
HD Precision Waveform Monitor	$12K
HD Signal Monitor	$20K
Audio Processing	$6K
Audio Monitoring	$10K
Total	$997K

Sample Transmission Package 1

10 KW ERP VHF, (Low Band) (best case)

Existing tower site

Exisiting Tower, minor modification	$10K
Exisiting building, minor modifications	$10K
Legal fees, no complaints	$5K
Engineering/antenna	$36K
Engineering/FAA&FCC	$50K
Engineering/tower	$8K
Transmission Plant	$817K
Total	$936K

Sample Transmission Package 2

10 KW ERP VHF, (Low Band) (worst case)

New tower site & tower	$2,410K
New building	$113K
Legal fees	$50K
Engineering/antenna system	$36K
Engineering/FAA&FCC	$50K
Engineering/tower	$8K
Transmission Plant	$817K
Total	$3,484K

Sample Transmission Package 3

30 KW ERP VHF, (High Band) (best case)

Existing tower site	
Exisiting Tower, minor modification	$10K
Exisiting building, minor modifications	$10K
Legal fees, no complaints	$5K
Engineering/antenna	$36K
Engineering/FAA&FCC	$50K
Engineering/tower	$8K
Transmission Plant	$867K
Total	$986K

Sample Transmission Package 4

30 KW ERP VHF, (High Band) (worst case)

New tower site & tower	$2,410K
New building	$113K
Legal fees	$50K
Engineering/antenna system	$36K
Engineering/FAA&FCC	$50K
Engineering/tower	$8K
Transmission Plant	$867K
Total	$3,534K

Sample Transmission Package 5

150 KW ERP UHF (best case)

Existing tower site	
Existing tower, minor modification	$10K
Existing building, minor modification	$10K
Legal fees, no complaints	$5K
Engineering/antenna system	$36K
Engineering/FAA & FCC	$50K
Engineering/tower	$8K
Transmission Plant	$997K
Total	$1,116K

Sample Transmission Package 6

150 KW ERP UHF (worst case)

New tower site & tower	$2,410K
New building	$113K
Legal fees	$50K
Engineering/antenna system	$36K
Engineering/FAA&FCC	$50K
Engineering/tower	$8K
Transmission Plant	$997K
Total	$3,664K

VI. Broadcast Origination/Studio Plant

MODEL #1 HDTV - PASS-THROUGH NETWORK PROGRAMMING

HDTV Broadcast Operations

1	Broadcast/routing switcher	$80K/each	$80K
4	HD color monitors 4 - 18"	$11K/each	$44K
	Video signal processing/distribution		$35K
1	Upconverter	$50K/each	$50K
1	Downconverter	$50K/each	$50K
2	HD Precision WM	$12K/each	$24K
2	HD Precision Signal Monitors	$20K/each	$40K
12	HD B&W monitors (8")	$2K/each	$24K
	Audio monitoring (4 ch.)	$10K/each	$10K
	HD Studio Test Equipment		$75K
	WB Oscilloscope	$15K	
	HD Test Generator	$26K	
	Bit Error Rate Analyzer	$12K	
	Tools	$15K	
	Misc	$7K	
1	Precision Demodulators	$22K/each	$22K
1	Demultiplexers	$15K/each	$15K

MODEL #1 HDTV - continued

HDTV PBS Feeds			
1	HD satellite receiver	$10K/each	$10K
1	HD character generator	$60K/each	$60K
1	HD still store	$70K/each	$70K
1	HD sync generator/pulse distribution	$25K/lot	$25K
1	HD Frame Synchronizer	$38K/each	$38K
HDTV Studio to Transmitter Links			
1	HD STL	$48K/each	$48K
		Subtotal	$720K
	Installation Materials (7%)		$50K
		Total for Model 1	$770K

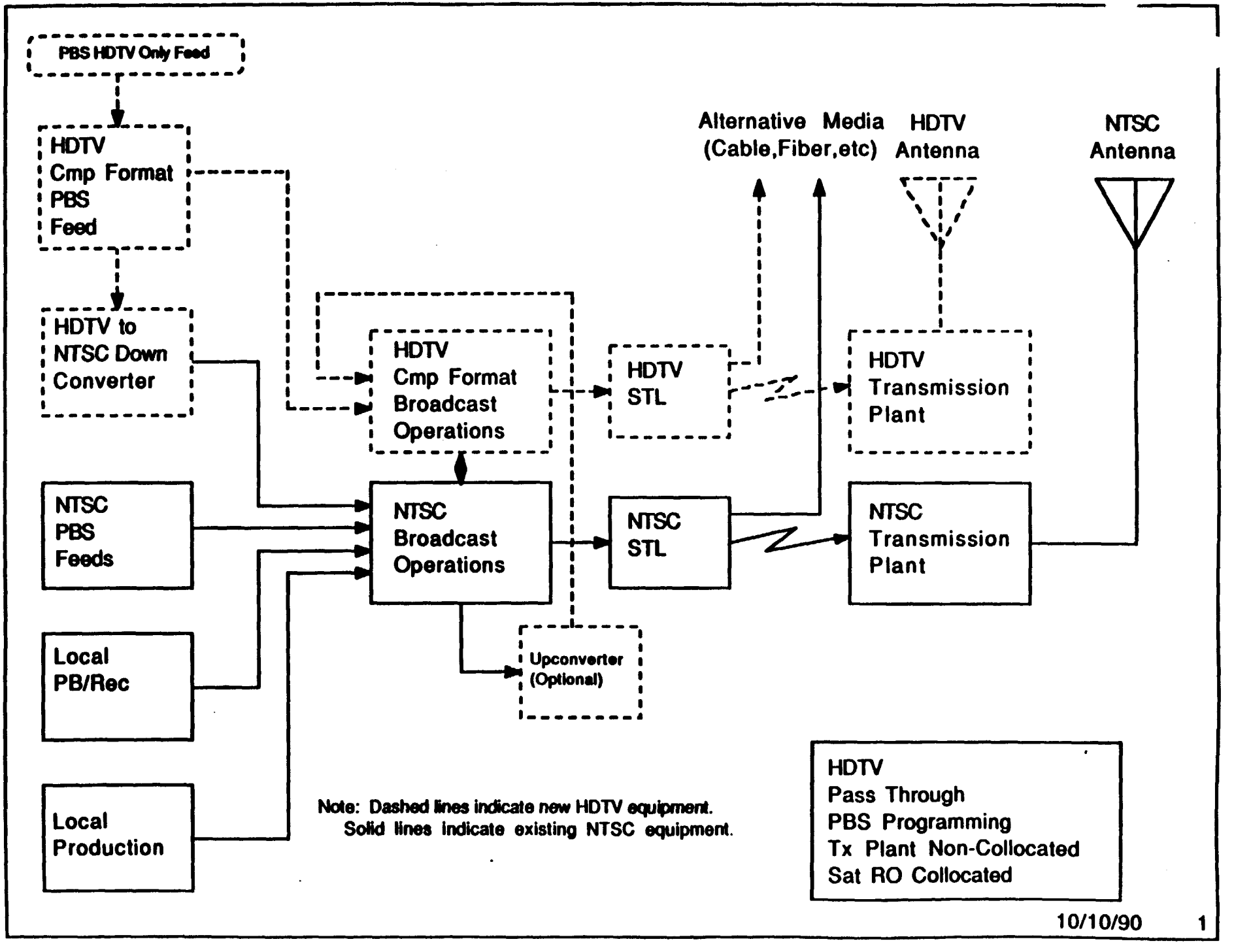
PBS HDTV Only Feed
HDTV Cmp Format PBS Feed
HDTV to NTSC Down Converter
HDTV Cmp Format Broadcast Operations
HDTV STL
Alternative Media (Cable,Fiber,etc)
HDTV Antenna
NTSC Antenna
HDTV Transmission Plant
NTSC PBS Feeds
NTSC Broadcast Operations
NTSC STL
NTSC Transmission Plant
Local PB/Rec
Upconverter (Optional)
Local Production
Note: Dashed lines indicate new HDTV equipment.
Solid lines indicate existing NTSC equipment.
HDTV
Pass Through
PBS Programming
Tx Plant Non-Collocated
Sat RO Collocated
10/10/90
1

MODEL #2 HDTV - LIMITED LOCAL PLAYBACK CAPABILITIES

4	HD compressed format VTR's	$80K/each	$320K
	Router Expansion for HD VTR's		$80K
8	HD B&W Monitors (8")	$2K/each	$16K
2	HD 14" color monitors	$11K/each	$22K
2	HD Utility WM	$6K/each	$12K
1	HD Precision WM	$12K/each	$12K
1	HD Precision Signal Monitor	$20K/each	$20K
	Subtotal		$482K
	Installation Materials (5%)		$24K
	Model 2 Total		$506K
	Total for Models 1 & 2		$1,276K