RECEIVED

NOV - 9 1992

FEDERAL COMMUNICATIONS COMMISSION
OFFICE OF THE SECRETARY

ORIGINAL

Before the
FEDERAL COMMUNICATIONS COMMISSION
Washington, D.C. 20554

ORIGINAL FILE

In the Matter of	)	
	)	
Amendment of the Commission's Rules to Establish New Personal Communications Services	)	GEN Docket No. 90-314 ET Docket No. 92-100

COMMENTS

Pursuant to Section 1.415 of the Commission's Rules, Alcatel Network Systems, Inc. ("ANS"), by its attorney, hereby submits its Comments on the above-captioned Notice of Proposed Rule Making and Tentative Decision ("NPRM").

In its NPRM, the Commission proposes allocation of spectrum for personal communications services ("PCS") and adoption of rules governing provision of PCS. Among the issues the Commission addresses in the NPRM is unlicensed PCS operations. NPRM at paras. 41-45.

The Commission tentatively concludes that "permitting the use of PCS devices on an unlicensed basis could be in the public interest, and therefore propose[s] to allocate spectrum for the operation of such PCS devices." Id. at para. 42. To facilitate implementation of unlicensed PCS, the Commission proposes that unlicensed PCS operation be co-primary with Part 94 operations;

0+5

that the 1910 to 1930 MHz band be designated for these operations and that it be channelized to accommodate narrowband and broadband PCS; and that such unlicensed devices be prohibited from causing harmful interference to stations for which license applications are on file as of the NPRM adoption date. Id. at paras. 43-44.

ANS is a wholly-owned subsidiary of Alcatel Alsthom, one of the world's largest corporations (with annual sales in excess of $30 billion). Alcatel Alsthom is the world's largest manufacturer and supplier of telecommunications equipment. In particular, Alcatel Alsthom is the world's largest independent manufacturer and supplier of microwave telecommunications equipment.

ANS supports the development and implementation of PCS and other emerging technologies. However, ANS is concerned about the possible impact that unlicensed PCS operations would have on the integrity of fixed microwave operations. As detailed in the Attachment hereto, prior to authorizing unlicensed PCS operation in the 1910 to 1930 MHz band, the Commission must refine its proposed rules as follows:

Interference Protection

The Commission proposes sharing of the 1910 to 1930 MHz band between point-to-point microwave and unlicensed PCS operations. It assumes that PCS power levels would be sufficiently low so that microwave operations would not be affected.

ANS disagrees with this assumption. As it demonstrates in the Attachment, the effect of a 1 watt PCS system interfering with a point-to-point microwave path is unacceptable. Moreover, even

though the proposed rules would empower the microwave licensee to request that the Commission require that the unlicensed PCS system cease or modify operation to eliminate the problem, this remedy will be ineffective given the hundreds of potential interference sources in a particular area.

Accordingly, ANS opposes reallocation of the 1910 to 1930 MHz band until adequate safeguards are adopted to protect against interference to microwave licensees from unlicensed PCS. To ensure prompt adoption of these necessary rules, in the near future, ANS formally will request that the Commission initiate an industry-wide inquiry designed to collect the necessary data and proposals so that the private sector can formulate such safeguards. ANS is willing to take the lead in assisting the Commission in undertaking this inquiry. Once completed, the safeguards developed in this inquiry could be made a part of appropriate industry standards, such as TSB 10.

Interference Calculations

Complicating the issue of interference protection is how levels of interference from unlicensed PCS operations would be calculated. Under the NPRM, it appears that interference calculations would be based upon assuming that all PCS mobiles operate from a single point (e.g., the base station). This assumption does not correspond to reality. Calculations should be based upon the assumption that mobiles are distributed evenly over the cellular coverage area to accommodate for an unusual concentration of mobiles at a specific site.

In addition, the methodology that would be used to calculate interference is inappropriate. Interference requirements for digital radios should not be based upon the tables in TSB 10E. Instead, such requirements should be based upon measured threshold-to-interference curves, as detailed in the Attachment.

Respectfully submitted,

ALCATEL NETWORK SYSTEMS, INC.

Robert J. Miller
Gardere & Wynne, L.L.P.
A Registered Limited Liability Partnership
1601 Elm Street, Suite 3000
Dallas, Texas 75201
214-999-4219

Its Attorney

November 6, 1992

GW03/127479

Alcatel Network Systems, Inc.

Specific Comments

Regarding Unlicensed PCS

Operations

Composed by
Alcatel Network Systems, Inc.
Technical Staff

A. Interference Protection

Alcatel takes strong exception the proposed sharing of the 1910 to 1930 MHz band between point-to-point microwave and unlicensed PCS systems. The NPRM states that the PCS power levels will be too low to affect microwave systems. Alcatel does not agree.

The following interference example shows the effect of an unobstructed one watt PCS system interfering with a point-to-point microwave path. The resulting interference would cause an outage on a co-channel digital microwave system and threshold degradation on an adjacent channel system. PCS modulation methods will tend to be relatively simple.[1,2] In the interference example, if the point-to-point microwave system is using complex high level modulation, such as the typical 64 QAM, and the PCS system is using a simple low level modulation, such as 4 QAM, the point-to-point system would be affected first.

Under the proposed rules, a point-to-point microwave operator which was receiving interference from an unlicensed PCS system could petition the FCC to have the PCS system shut down or modified to reduce the interference levels. However, since the PCS systems are unlicensed, it would be very difficult to determine the interference location. For cordless telephones and other consumer devices, there could be hundreds of potential interference sources in a particular area. This arrangement would not be acceptable to private microwave operators which demand very high reliability from their equipment. Before unlicensed PCS is allowed into this band, consideration of possible interference to the existing microwave systems should be given. In some cases both co-channel and adjacent channel existing microwave systems may need to be relocated. Comment by frequency coordination agencies is solicited.

1. *Proceedings, First International Conference on Universal Personal Communications*, Piscataway: IEEE Communications Society, 1992.

2. Lee, W. C. Y., *Mobile Cellular Telecommunications Systems*, New York: McGraw-Hill, 1989.

B. Interference Calculations

Interference calculations should assume that 100% of the mobile frequencies are occupied simultaneously in each cell in the coordination area. This approach would allow for unusual concentrations of mobiles at a particular location.

In the NPRM, the FCC appears to locate all mobiles at a single point (i.e., at the base station). Assuming that all mobiles are located at a single point will be optimistic for large cells or cells directly in front of a point-to-point microwave antenna. Calculations should assume that mobiles are evenly distributed over each cellular coverage area.

The interference tables in TSB 10E are inadequate for defining adjacent channel interference requirements. For digital radios, interference requirements based on measured threshold-to-interference curves would be preferable (i.e., maximum interfering power level: I = Threshold - T/I).

High power mobiles in the immediate vicinity of a point-to-point microwave site could cause outages due to RFI leakage into the shelter. Cases of cellular phone induced outages have been observed. It is highly recommended that experiments be conducted to determine practical tolerance levels for these phones used near point-to-point microwave facilities.

From a frequency coordination perspective, high power base stations are more acceptable than high power mobiles. Base stations are in a fixed location and therefore have more predictable transmission characteristics.

C. Table of Coordination Distances

The proposed (Section 99.409 of the proposed rules) table of coordination distances for interference into existing microwave systems seems reasonable for non-boresight cases. It is currently common practice to coordinate a 125 mile radius around the fixed site, and for a 250 mile radius within $\mp 5^{o}$ of the fixed antenna boresight (see Figure 1). The in-process TIA Bulletin 10 revision reflects this 250 mile requirement.

In generating the NPRM table, the FCC appears to have assumed a flat path 125 miles long with the PCS base station antenna 295 feet above ground, the microwave site 3280 feet above ground as a worst case, and a single knife-edge grazing obstruction blocking the path at normal K=4/3 earth curvature.

As the PCS antenna height is increased, the path length is increased to obtain about the same diffraction loss from the obstruction. For higher PCS transmit powers, the path length is increased to offset the higher power with more diffraction loss.

FIXED MICROWAVE COORDINATION AREA

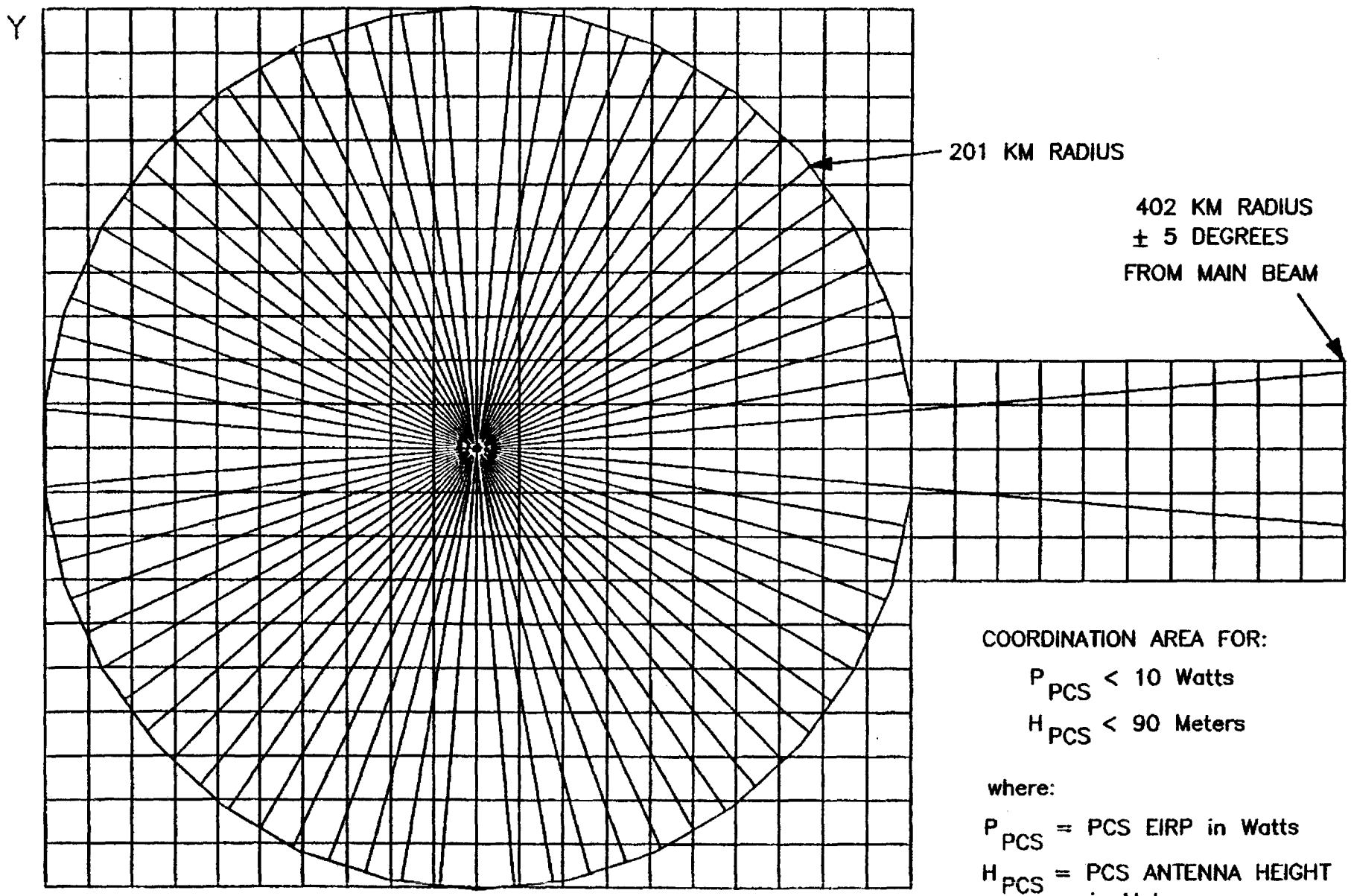

FIXED MICROWAVE AT CENTER
CALCULATE PATH LOSS ALONG RADIALS

COORDINATION AREA FOR:

$P_{PCS} < 10$ Watts

$H_{PCS} < 90$ Meters

where:

P_{PCS} = PCS EIRP in Watts

H_{PCS} = PCS ANTENNA HEIGHT in Meters

NOTE: 201 KM = 125 MILES

Figure 1

INTERFERENCE EXAMPLE
PCS into POINT-TO-POINT MICROWAVE

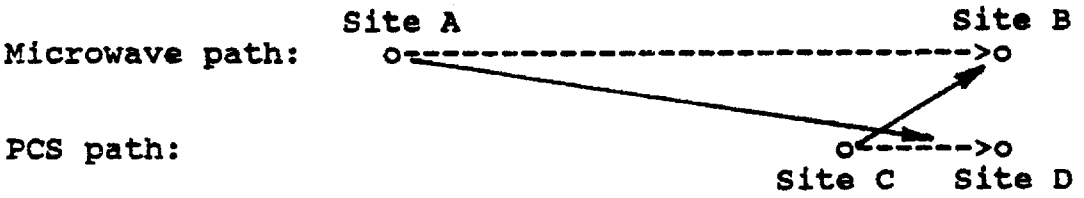

Assume the following:

D_{AB} = 20 miles	(microwave path length)
D_{CD} = 1 mile	(PCS path length)
D_{AD} = 20 miles	(Site A to Site D interference path)
D_{CB} = 1 mile	(Site C to Site B interference path)
P_A = +29 dBM	(microwave transmit power)
P_C = +27 dBM	(PCS transmit power)
L_{AD} = 0 dB	(Site A to Site D - terrain loss)
L_{CB} = 0 dB	(Site C to Site B - terrain loss)
G_A = 27.3 dBi	(microwave antenna gain - 6 foot grid)
G_B = 27.3 dBi	(microwave antenna gain - 6 foot grid)
G_C = 3 dBi	(PCS antenna gain)
G_D = 3 dBi	(PCS antenna gain)
M_{AD} = 0 dB	(Site A toward Site D antenna discrimination)
M_{DA} = 0 dB	(Site D toward Site A antenna discrimination)
M_{CB} = 0 dB	(Site C toward Site B antenna discrimination)
M_{BC} = 0 dB	(Site B toward Site C antenna discrimination)

<u>PCS INTO POINT-TO-POINT MICROWAVE</u>

From TIA Bulletin 10E, the carrier-to-interference of a 1 watt PCS transmitter at Site C interfering into the point-to-point microwave receiver at Site B is:

$$C/I = (P_A - P_C) + (G_A - G_C) - 20\ LOG(D_{AB}/D_{CB}) + M_{CB} + M_{BC} + L_{CB}$$

$$C/I = (29 - 27) + (27.3 - 3) - 20\ LOG(20/1) + 0 + 0 + 0$$

$$C/I = 0.3\ dB$$

Assuming that the point-to-point microwave path was operating co-channel and used an Alcatel 1-DS3 64-QAM digital radio, the required C/I would be 24 dB for a 10^{-6} bit error rate. The External Interference Fade Margin (EIFM) would be:

$$EIFM = C/I - C/I_R = 0.3 - 24 = -23.7\ dB$$

Since the effective fade margin is negative, the radio would run continuous errors.

The microwave path would not work without significant antenna discrimination, terrain blockage of the interference path, or shielding of the PCS transmitter by a building structure.

If the point-to-point microwave was adjacent channel to the PCS transmitter and offset in frequency by 10 Mhz, the required C/I would vary from -10 dB for a wide-band digital interference to -28 dB for a narrow band CW interference for the Alcatel 1-DS3 radio. The resulting External Interference Fade Margin (EIFM) would be:

$$EIFM = 0.3 - (-10) = 10.3 \text{ dB} \quad \text{wide-band digital}$$

$$EIFM = 0.3 - (-28) = 28.3 \text{ dB} \quad \text{CW interference}$$

For a path with a 40 dB thermal fade margin, the path would still be operable, but with a reduced fade margin.

POINT-TO-POINT MICROWAVE INTO PCS

The carrier-to-interference for a point-to-point microwave transmitter at Site A interfering into a PCS receiver at Site D is:

$$C/I = (P_C - P_A) + (G_C - G_A) - 20 \text{ LOG}(D_{CD}/D_{AD}) + M_{AD} + M_{DA} + L_{AD}$$

$$C/I = (27 - 29) + (3 - 27.3) - 20 \text{ LOG}(1/20) + 0 + 0 + 0$$

$$C/I = -0.3 \text{ dB}$$

If the PCS transmitter used 4 QAM modulation similar to the Alcatel CXR-424 450 Mhz exchange radio, the required C/I for a co-channel interference would be approximately 11.5 dB for a 10^{-6} bit error rate. The External Interference Fade Margin would be:

$$EIFM = -0.3 - 11.5 = -11.8 \text{ dB}$$

As in the case of the PCS system interfering with a point-to-point microwave system, the PCS radio would run continuous errors. However, the point-to-point microwave path would fail before the PCS path due to the more complex modulation method.