92-100

ORIGINAL FILE

Putting It All Together: The Cost Structure of Personal Communications Services

RECEIVED

NOV 10 1992

FEDERAL COMMUNICATIONS COMMISSION
OFFICE OF THE SECRETARY

David P. Reed

November 1992

Office of Plans and Policy
Federal Communications Commission
Washington, D.C. 20554

OPP Working Paper No. 28

The opinions and conclusions expressed in this paper are those of the author and do not necessarily reflect the views of the Federal Communications Commission or any of its Commissioners, or other staff. This paper is intended to stimulate discussion and critical comment outside the FCC as well as within the agency.

Table of Contents

List of Tables iii
List of Figures iv
Executive Summary v
Section I. Introduction 1
Section II. Estimating the Costs of Building a PCS Network 5
Network Layout 5
Estimating the Costs of a PCS Network 8
Network Switching 9
Wireline Transport 12
PCS Cell Sites 14
Handsets 17
Total Capital Costs of a PCS Network 19
Sensitivity Analysis 20
Network Complexity 21
Grade of Service 21
Variations in Demand 22
Spectrum Efficiency 23
Annualized Capital and Operating Costs Estimates 25
Summary of PCS Model Results 27
Section III. Economies of Scope Between PCS and Other Services 28
Providing PCS Over Telephone Networks 28
Providing PCS Over Cable Television Networks 31
Providing PCS Over Cellular Networks 35
Summary and Discussion 42
Section IV. Public Policy Implications 44
Service Definition of PCS 45
Number and Size of Spectrum Allocations 48
Number of Licenses 48
Amount of Spectrum Per License 52
Eligibility Requirements for PCS Licenses 54
New PCS Providers 55
Cellular Operators Not Affiliated With Telephone Companies 56
Local Telephone Companies 58
Appendix A. Wireless Technologies 60
Design of Wireless Communications Systems 60
The Wireless Channel 60
The Cellular Concept 61
Radio Access Technologies 65
Network Signalling and Database Requirements 69
Link Between Service Demand and Network Architecture 70
Subscriber Location and Velocity 72
Usage Characteristics 74
Planning for Network Evolution 75
Appendix B. Cable Layouts of PCS Networks 76
Appendix C. Summary of Cost Model Base Case Assumptions 81
Bibliography 82

List of Tables

Table 1. Maximum Number of Radio-Based Channels Available Per Cell Site (N=7) 6
Table 2. Estimated Switching Costs per Subscriber 11
Table 3. Cost per Subscriber of Wireline Transport (in dollars) 14
Table 4. Cost per Subscriber of PCS Cell Sites (in dollars) 17
Table 5. Estimated Capital Costs per Subscriber of PCS System 20
Table 6. Variation of Estimated Capital Costs per Subscriber to Grade of Service 22
Table 7. Cost per Subscriber of Cellular Network (in dollars) 37
Table 8. Estimated Annual Savings For PCS Using Existing Infrastructure 42
Table 9. Subjective Assessment of Potential Sources of PCS Functional Components Between Infrastructure Alternatives 44
Table A-1. Comparison of Cellular and Cordless Radio System Parameters 67
Table C-1. Base Case Assumptions for Cost Model 81

List of Figures

Figure 1. The Personal Communications Services Model 2
Figure 2. Network Layout 6
Figure 3. Number of Cell Sites as a Function of Spectrum Allocation and Level of Service Penetration 7
Figure 4. PCS Network Architecture 9
Figure 5. Total Estimated Capital Costs per Subscriber of PCS System (in dollars) 20
Figure 6. Variation of Total Estimated Costs per Subscriber to Electronics Costs 21
Figure 7. Variations in Total Estimated Costs per Subscriber to Usage 23
Figure 8. Variations in Total Installation Costs per Subscriber to Radio Systems with Different Levels of Spectral Efficiency .. 24
Figure 9. Total Annualized Expenses for PCS 26
Figure 10. Categories of Annual PCS Costs 27
Figure 11. Measuring Economies of Scope Between PCS and Telephone Service (in dollars) 30
Figure 12. Cable Television Network Architecture to Deliver PCS 33
Figure 13. Measuring Economies of Scope Between PCS and Cable Television Service (in dollars) 34
Figure 14. Cellular Telephone Architecture to Deliver PCS 36
Figure 15. Annual Cost Function for Cellular Telephone Service (in dollars) 38
Figure 16. Measuring Economies of Scope Between Cellular and PCS (in dollars) 39
Figure 17. Average Annual Capital Cost Per Subscriber of Cellular System and Base Case PCS System Assuming Varying Amounts of Spectrum Dedicated for PCS 40
Figure 18. Average Annual Capital Cost Per Subscriber of Cellular System and PCS System (N=16, Channel Size=70 KHz) Assuming Varying Amounts of Spectrum for PCS 41
Figure 19. Variation in Total Annual Costs to Varying Numbers of Firms in the PCS Market 49
Figure 20. Variation in the Annual Costs of an Integrated PCS and Telephone Network (Including Capital and Operating Expenses for PCS Only) to Varying Numbers of Firms in the PCS Market 50
Figure B-1. PCS Architecture with 1600-meters Microcell 76
Figure B-2. PCS Architecture with 800-meters Microcells 77
Figure B-3. PCS Architecture with 400-meters Microcells 78
Figure B-4. PCS Architecture with 200-meters Microcells 79
Figure B-5. PCS Architecture with 100-meters Microcells 80

Executive Summary

This study examines the cost structure of proposed personal communications services (PCS) in order to assess the potential spectrum requirements of these new services. The cost model developed for this report estimates the costs of building and operating a new PCS network, as well as the costs of providing PCS using existing infrastructure such as the telephone, cable television, and cellular telephone networks. Based upon these estimates, this study finds 1) economies of scope between PCS and each of these services, 2) no justification based upon characteristics of the cost functions for limiting the number of licenses to the PCS market for license sizes of 20 MHz or more, and 3) that 20 MHz may be a sufficient spectrum allocation size to implement low-cost PCS systems. Because 20 MHz may not be enough spectrum for all PCS applications or in those areas where high densities of incumbent microwave users exist, the study recommends that PCS license holders should also be permitted to consolidate licenses up to a 40 MHz limit.

Because of the economies of scope which could be achieved, the study finds that consumers could benefit from allowing cellular and local telephone companies to hold at least some PCS spectrum if a sufficient number of PCS competitors exist. The study recommends that cellular operators be permitted to acquire up to 10 MHz of spectrum from new PCS licensees, an amount that was found to be sufficient for cellular providers to realize these economies of scope. With regard to local telephone companies, contingent upon the presence of adequate safeguards to insure non-discriminatory interconnection and to prevent cross-subsidization of PCS from the revenues of regulated services, the study similarly recommends these firms be allowed to acquire up to 10 MHz of spectrum in areas where they operate a cellular subsidiary, and be treated like any other PCS provider in the remaining service areas.

Estimating the Costs of New PCS Infrastructure

Much attention has been focused recently upon the prospects for PCS that would deliver a diverse set of wireless telecommunications services with an unprecedented degree of mobility and portability. This popularity has fueled optimism that PCS will grow and develop into major new markets over the next decade. Yet questions remain regarding who will be the suppliers of PCS. Local telephone, cable television, and cellular companies all claim their networks and service organizations are best suited to deliver PCS. Intuitively, the suppliers most likely to play major roles in PCS would seem to be those already owning infrastructure well suited for this purpose. Predicting future PCS providers, therefore, depends upon both the characteristics of the cost function for PCS and how well the network elements needed to deliver PCS match with the network elements of existing suppliers.

The extent to which synergies exist between PCS and existing network services can be described through the economic concepts of efficiency and economies of scale and scope. Economic efficiency strives to maximize the social benefits

available from a limited allocation of resources. Efficiency can be improved by reducing costs, and potential means to lower costs are to capture economies of scale and scope in the production of multiple services. Economies of scale are present when unit costs decrease with higher levels of output. Economies of scope exist between services when the costs of providing these services over one network is less than the combined cost of separate networks. Determining whether the provision of PCS exhibits economies of scale and scope requires knowledge of the cost functions of PCS and the other services. The presence of these production economies has implications for a number of key public policy issues facing the Federal Communications Commission (FCC) which must be decided before deployment can proceed. These policy issues include deciding what is the appropriate service definition of PCS, the total amount of spectrum to be allocated to PCS, the size of the spectrum blocks assigned to each licensee, the number of PCS licenses in each service area, and who should be eligible to hold the new PCS licenses.

The purpose of this study is to estimate the costs of PCS systems in order to shed more light on these policy issues. The general methodology taken in this paper is to assume that a block of spectrum has been allocated for PCS near the 2 GHz band of frequencies as has been proposed by the FCC for PCS applications. This paper estimates the costs of building and operating a PCS network in a new residential housing development using an engineering cost model that assumes spectrum allocation sizes between 2 MHz to 40 MHz. The model assumes a PCS network consisting of fiber optic transmission network connecting radio cell sizes of less than 1.6 kilometers in radius, small lightweight handsets, and a five-year time horizon for technological options. Adding these figures to previously published cost estimates of telephone and cable television networks provides an estimate of the total costs of separate networks. The paper then estimates the costs of providing PCS on an integrated basis with telephone, cable television, and cellular services in order to predict whether economies of scope will be present.

A summary of the salient quantitative results of the cost model include:

- The capital costs of a PCS network, including the handset, in a new residential area would be $703 per subscriber assuming base case assumptions of 25 MHz allocation size and 10 percent household rate of penetration.
- The total annualized cost of operating this PCS network would be $546 per subscriber for these base case assumptions, with infrastructure costs accounting for 25 percent of the overall total.
- Economies of scale in the cost function of a new PCS network would be largely exhausted for subscription rates above 20 percent of households per provider. This result should be viewed as a high estimate of when scale economies would be exhausted, since the model assumes a network of small cells and therefore a high degree of fixed costs. This basic result held despite sensitivity analysis to the cost of electronic components, grade of service, levels of offered traffic, and spectrum efficiency of the radio system.

- PCS network costs vary substantially with the level of spectral efficiency of the radio system deployed in the PCS network. Radio systems with the lowest level of spectrum efficiency considered in this analysis are viable for PCS when the allocation size is greater than 20 MHz.

Estimating Economies of Scope Between PCS and Existing Communications Services

This paper finds that economies of scope exist between PCS and telephone, cable television, and cellular services for the network technologies assumed in this paper. Further, the economies of scope found between PCS and these services alter the characteristics of the cost function for PCS. Using these existing infrastructure exchanges fixed costs for variable costs in the cost function. As a result, the economies of scope not only lower the upfront investment initially necessary to provide PCS, they could reduce to 10 percent the level of subscription at which economies of scale are exhausted for a provider.

One implication of these findings is that an independent firm -- an entrepreneur or small company that obtains a PCS license but does not own any existing infrastructure in the subscriber loop -- probably would not choose to construct its own separate PCS network. Results indicate the fixed costs of a PCS network using very small radio cells are high in relation to the fixed costs of providing PCS using existing infrastructure. This cost differential is especially dramatic at the low levels of penetration which will expected during early deployment. Thus, independent providers are likely to pursue a strategy of negotiating alliances among the infrastructure alternatives available to deliver PCS.

The table below offers a broad, but not necessarily comprehensive, list of infrastructure alternatives which PCS licensees might use to deliver services. Each column represents a functional component of PCS. The table reports which infrastructure alternatives could serve as potential sources for these functional components based upon whether economies of scope might exist between PCS and the services already provided by the infrastructure. The table notes where the economies of scope have been verified by the cost model reported in this paper, and where the economies of scope are subjective assessments that have not been verified by the cost model. While this paper focuses upon the use of telephone, cable television, and cellular networks to deliver PCS, a number of other players or combinations of players are also likely to participate in these markets. This list includes interexchange carriers, competitive access providers (CAPs), and electric or gas utilities.

Subjective Assessment of Sources of PCS Functional Components Across Infrastructure Alternatives

Infrastructure Alternatives	OA&M*	Advanced Signalling Network & Intelligent Nodes	Switching	Transport	Cell Sites	Hand-sets
Telephone Network	•	Δ	•	•		
Cable Television Network	•			•		
Cellular Network	•	◊	•	◊	◊	•
Cable/Cellular Joint Venture	•	◊	•	•	◊	•
Interexchange Carrier	Δ	Δ	◊			
Competitive Access Provider	◊	◊	◊	◊		
Electric or Gas Utility				Δ		

* OA&M - Operations, Administration, and Maintenance Services
• Economies of scope found to exist in this component by cost model reported in this paper
Δ Strong economies of scope likely to exist in this component, although not verified by cost model
◊ Limited economies of scope likely to exist in this component, although not verified by cost model

Implications for Public Policy

What are the public policy implications of the preceding engineering and cost analysis that finds economies of scope between PCS and existing infrastructure, and that economies of scale are exhausted at low penetration levels?

Service Definition of PCS. The technical review of wireless technologies conducted in this paper shows that substantial uncertainties exist regarding future wireless services and the technologies that will be used to convey them. Given this uncertain environment, this study endorses a broad service definition of PCS, as the FCC already has proposed, which provides licensees substantial flexibility in how they are authorized to provide services under PCS licenses.

Number and Size of Spectrum Allocations. Modeling perhaps the worst case (*i.e.*, highest fixed cost) scenario, the results do not justify limiting the number of licenses in a market due to the characteristics of the cost function. With a total subscription rate of 30 percent of the households, the difference in total annualized costs between 1 supplier or 6 suppliers is about $125 per subscriber, or about $10 per month, using the telephone network to deliver PCS. The results support issuing the highest number of licenses possible if the spectrum block size is 20 MHz or more. Because the FCC has stated that it will allocate a minimum of 90 MHz, five or six 20 MHz licenses could be issued. As noted above, however, 20 MHz may not be enough spectrum to implement low-cost radio systems in areas where high densities of incumbent microwave users exist, or to provide other applications not considered in this analysis. Therefore, PCS suppliers should be permitted to consolidate licenses up to a 40 MHz limit.

Issuing five or six 20 MHz licenses has a number of desirable characteristics:

- A high number of licenses would establish a market structure with strong incentives for competition in the provision of PCS, and hence

strong incentives for consumers to benefit through lower prices, higher quality services, and more choices among innovative service alternatives.

- If more spectrum than 20 MHz is necessary due to a high density of microwave users, or to provide other applications, consolidation would still result in the satisfactory outcome of three suppliers each with 40 MHz, with a market test of whether such an outcome were efficient.
- Numerous licenses offers more flexibility to resolve other licensing issues. For example, with 6 licenses available the FCC has more flexibility to offer a mix of nationwide, regional, and local licenses, or to permit telephone and cellular companies to have some form of eligibility to hold new PCS licenses.

Eligibility Requirements for PCS Licenses. The economies of scope found between PCS and both telephone and cellular services show that consumers could benefit from allowing these companies to hold PCS licenses. Moreover, the weak economies of scale in the cost function show that it is unlikely that one or two firms would dominate the market due to any cost characteristics of the market. As a result, the study recommends eligibility requirements that include a "spectrum cap" of 40 MHz for all firms and only slight additional eligibility restrictions on cellular firms. If five or six licenses are issued, then the benefits of permitting cellular companies not affiliated with the local telephone company to acquire some additional spectrum are likely to outweigh the costs. Therefore, this study recommends that these cellular operators be eligible to acquire an additional 10 MHz of spectrum, which model results show is sufficient to exploit economies of scope between PCS and cellular services.

Contingent upon adequate safeguards against discriminatory interconnection practices and cross-subsidy, the results of this analysis indicate that consumers could benefit from allowing local telephone companies to hold PCS licenses if a large number of PCS licenses are issued. If adequate safeguards are available to mediate the above concerns, telephone companies should be allowed to fully participate in PCS subject to the same restrictions placed on other entities. Telephone companies with cellular holdings, of course, should be subject to the same eligibility restrictions placed on unaffiliated cellular operators.

Putting It All Together:
The Cost Structure of Personal Communications Services

by

David P. Reed[1]
Office of Plans and Policy
Federal Communications Commission
Washington, D.C. 20554

Section I. Introduction

Much attention has been focused recently upon the prospects for personal communications services (PCS) that would deliver a diverse set of wireless telecommunications services with an unprecedented degree of mobility and portability. The rapid growth of cellular, cordless telephone, and paging services throughout the 1980s demonstrates the strong demand for wireless services. This popularity has fueled optimism that PCS will grow and develop into major new markets over the next decade. Before these markets can expand, however, changes in federal policies are needed to allocate more spectrum for PCS. Accordingly, the Federal Communications Commission (FCC) issued a *Notice of Inquiry* seeking comment on the appropriate regulatory model for allocating spectrum to PCS (FCC, 1990) followed by a *Notice of Proposed Rulemaking and Tentative Decision* with a proposed spectrum allocation and regulatory framework for these services (FCC, 1992a).

It is now widely accepted that PCS represent a family of service applications featuring wireless access to network-based services. Existing or enhanced versions of familiar wireless services that fall under this definition of PCS include cellular, paging, and cordless telephone, plus new services such as wireless private branch exchange (PBX), wireless local area network (LAN), and wireless replacement of portions of the telephone network in the subscriber loop.[2] As

---

[1]The views expressed in this paper are solely those of the author and do not necessarily reflect those of the Federal Communications Commission, the Commissioners, or Commission staff. The author appreciates detailed manuscript comments given by James Gattuso, John Williams, Evan Kwerel, and Michael Marcus. The author, however, bears full responsibility for any errors of fact or interpretation in the paper.

[2]The PCS family could include wireless broadband services as well, although for the purposes of this study the definition of PCS will be confined to distribution of wireless narrowband services throughout the subscriber loop. The omission of broadband services from this study could alter some conclusions if there prove to be substantial economies present in the joint provision of narrowband and broadband wireless services. There has been some interest in including wireless broadband services within the PCS model in the early stages of development,

shown in Figure 1, the PCS model proposes a network infrastructure capable of delivering multiple wireless services to subscribers in both residential and business environments. Thus, an International Radio Consultative Committee (CCIR) study envisions five ways a personal radio handset can gain network access in the PCS model for voice services alone: accessing indoor or outdoor private and public base stations, accessing private indoor office base stations like a cordless phone, or communicating in a vehicular environment through a public mobile base station directly or via a vehicle mounted mobile station. (CCIR, 1990b). In this view, PCS represent the natural confluence of several existing and developing technologies and services using radio transmission as the access links to a network in the subscriber loop.

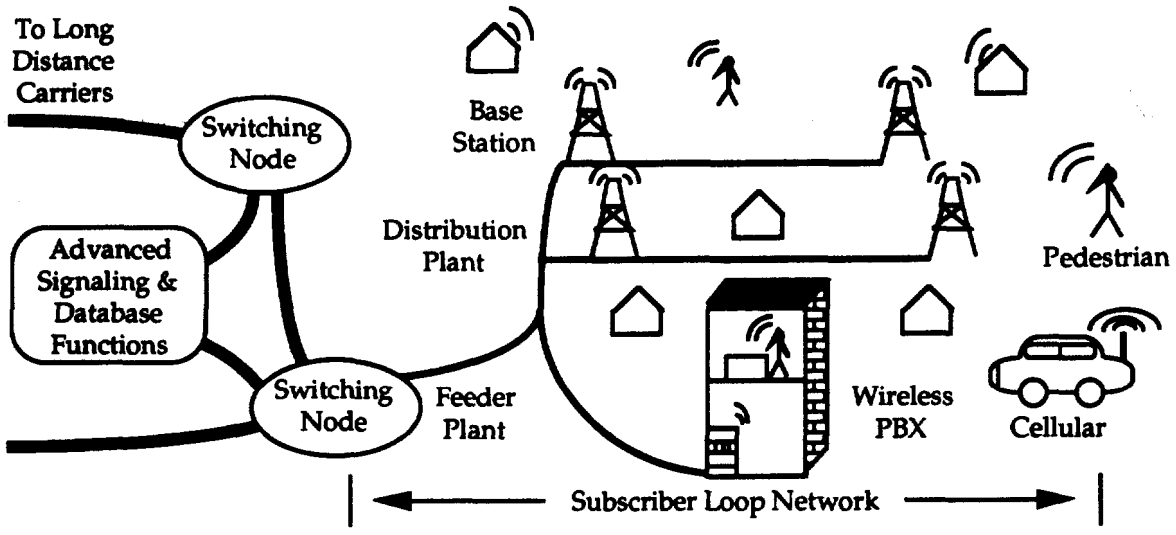

Figure 1. The Personal Communications Services Model

Given this model of PCS, who will be the service suppliers most likely to offer PCS to consumers? Telephone, cellular, and cable television companies all claim their networks and service organizations are best suited for PCS, and other independent service providers also seek to offer PCS. Intuitively, the suppliers most likely to play major roles in PCS would seem to be those already owning infrastructure and technologies well suited for this purpose. Predicting future PCS providers, therefore, depends upon both the characteristics of the cost function for PCS and how well the network elements needed to deliver PCS match with the network elements of existing suppliers. Figure 1 illustrates the principal functional elements of an infrastructure designed for wireless services, including network intelligence and switching nodes, and wireline transmission, base station, and handset equipment. Existing suppliers that can provide these

---

particular at frequencies near 28 GHz. See, for example, *Hye Crest Management, Inc.*, 6 FCC Rcd 332 (1991); *Ex Parte Notice RM 7842*, Filed at FCC on March 20, 1992 by the Suite 12 Group, or *Telocator Bulletin*. Jan. 10, 1992. 8-9.

functional elements at low incremental cost could have an early advantage in developing PCS markets.

The extent to which synergies exist between PCS and existing network services can be described more formally through the economic concepts of efficiency and economies of scale and scope. Economic efficiency strives to maximize the social benefits available from a limited allocation of resources. Efficiency can be improved by reducing costs, and potential means to lower costs are to capture economies of scale and scope in the production of multiple services. Economies of scale are present when unit costs decrease with higher levels of output. Economies of scope exist between services when the costs of providing these services over one network is less than the combined cost of separate networks. Determining whether economies of scope exist between PCS and other services, or whether economies of scale are present, requires knowledge of the cost function for PCS, and how much it costs to offer these services on one integrated network and over separate networks.

The presence of economies of scale in PCS and economies of scope between PCS and existing services has implications for a number of key policy issues which must be decided before deployment can proceed. Among these are:

- *Service Definition of PCS*. The service definition of PCS describes the authorized uses for spectrum licenses allocated for PCS. This paper examines the cost implications of different service definitions of PCS.
- *Spectrum Allocation*.[3] The FCC must decide the amount of spectrum to be allocated to PCS and the size of the spectrum blocks assigned to each licensee. This paper analyzes how infrastructure costs may vary with total spectrum allocation and block size.
- *Number of PCS Licenses*. The FCC must also determine the number of PCS licenses it will issue. The form of the cost function for PCS can indicate the extent to which economies of scale and scope could naturally limit the number of suppliers in the market. While the scope of this study is insufficient to fully characterize the most efficient market structure for PCS, the model results do offer a measure of the economies of scale and scope present in the costs of providing PCS.
- *Eligibility for PCS Licenses*. The FCC has expressed concern regarding whether cellular providers should be barred from holding PCS licenses in their own service areas because of the threat they pose to competition.[4] Likewise, some believe telephone companies should be

---

[3]If PCS providers could use market mechanisms to obtain the amount of spectrum they feel is necessary to deliver PCS, economies of scale and scope would have much less relevance to PCS policy since the competitive market would likely sort out the most efficient providers and number of players in the market.

[4]See *Notice* at ¶27: "To the extent that personal communications networks (PCN) and future generations of cellular would be similar, it could be argued that cellular licensees should not be permitted to apply for a PCN license in any market where they are licensed to provide cellular service. Such a policy would

ineligible for PCS licenses because they could use their control over switching and transmission facilities to discriminate against competing PCS providers. This study examines whether portions of the existing infrastructure are likely to be part of the future PCS network (*i.e.*, that economies of scope exist between PCS and existing services). This potential for economies of scope, in tandem with the anticipated market structure, is useful information in considering the merits of eligibility restrictions for PCS licenses.

The purpose of this study is to examine the costs of constructing PCS systems in order to shed more light on these policy issues. The general methodology taken here is to assume that a block of spectrum has been allocated for PCS near the 2 GHz band of frequencies, similar to what has already been proposed by the FCC (FCC, 1992b; FCC, 1992c).

This paper estimates the costs of building and operating a PCS network in a new residential housing development using an engineering cost model that assumes spectrum allocation sizes between 2 MHz to 40 MHz. The model assumes a PCS network consisting of fiber optic transmission network connecting radio cell sizes of less than 1.6 kilometers in radius, small lightweight handsets that can be used both indoors and outdoors and a five-year time horizon for technological options. Adding these figures to previously published cost estimates of telephone and cable television networks provides an estimate of the total costs of separate networks. The paper then estimates the costs of providing PCS on an integrated basis with telephone, cable television, and cellular services in order to predict whether economies of scope are present. Furthermore, by examining the distribution of costs across network components, the model identifies the network elements where economies of scope exist between PCS and existing services. This characterization of the cost structure of the market is useful in forecasting the potential evolution of PCS. The final step in this study is to apply the results of the engineering and economic analysis of PCS technologies to the policy issues listed above.

This study considers only a few of the potential alternatives for providing PCS. Considerable effort was expended to model generic network architectures likely to be representative of PCS systems five years in the future. The model results therefore are relevant only to the extent that the PCS alternatives modeled in this paper resemble the systems eventually deployed. The analytical framework and cost models reported in this paper, however, have been reported in sufficient detail to provide ample flexibility and opportunity for those who disagree with any assumptions or conclusions to insert their own assumptions into the model.

---

appear to promote competition in the personal communications market and thus serve the public interest." (FCC, 1990)

Section II of this paper describes the network model, specific component cost assumptions, and the cost estimates of PCS networks included in the cost model.[5] Section III determines whether economies of scope exist between PCS and telephone, cable television, or cellular telephone services. Section IV examines several policy issues in light of the model results.

Section II. Estimating the Costs of Building a PCS Network

The objective is to forecast the costs of building and operating a PCS network and examine whether economies of scope exist in the provision of PCS and existing telephone, cable television, or cellular services. This section describes the network layout, salient assumptions, and results of the cost model which calculates the installation and operating costs of a PCS network in the subscriber loop.

Network Layout

The network layout describes the geographic setting for estimating the costs of building a PCS network. The model assumes the same network layout used in (Reed, 1991; Sirbu, Reed, et al., 1989) to estimate the installation costs of telephone and cable television networks. Using the same network layout allows for economic comparisons between PCS systems and telephone or cable television systems under an equivalent set of assumptions.

Installation of the PCS network occurs in a hypothetical new residential development of 25,600 households, spread out over a square area with 160 homes to a side. As shown in Figure 2(a), the area consists of 25 square regions, each containing 1024 households uniformly distributed throughout a square grid of blocks with a mean housing density of 88 homes per street mile (Statistical Abstract of the United States, 1989). The uniform density of homes in this service area reduces the length of network segments relative to actual systems. With an average subscriber lot size of 37 square meters (one-third of an acre), all 25,600 households are concentrated in a 35 square kilometer area (13.5 square miles). To compensate, the model calculates installation costs for one region of 1024 homes -- including the equipment at the central switching node, and feeder costs attributable to that area -- and increases the length of the feeder network to reflect the presence of parks, businesses, and other undeveloped areas within the community (see Figure 2(b)). The mean length of the feeder network is 3072 meters; the mean of the distribution of residential loop lengths taken from a

---

[5]Because the engineering cost model is the key analytical tool which sets the foundation for the subsequent analysis, a technical appendix is included with this paper describing many of the technical and economic assumptions within the model. Readers unfamiliar with wireless technologies, proposed PCS radio systems, or network design issues posed by the implementation of PCS are referred to Appendix A for background material and model assumptions covering several important engineering and economic issues affecting the design of PCS networks.

survey of existing telephone networks (Bellcore, 1986). The model assumes all 1024 homes are part of a new residential housing development where the PCS network is installed alongside other essential infrastructure.

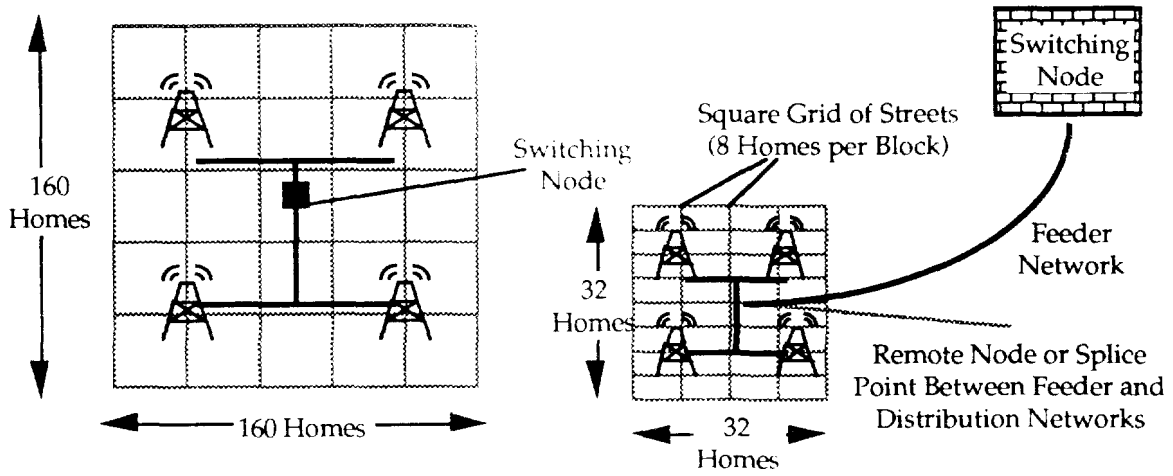

(a) PCS Model: 25,600 Households (b) Close-up View : 1024 Households

Figure 2. Network Layout

The number of cells in the PCS network depends upon the spectrum allocation size and the level of network traffic. Today's cellular systems have a 25 MHz spectrum allocation. With each full-duplex channel occupying 60 KHz, a cellular system using the AMPS standard delivers a total of 395 channels plus another 1.25 MHz (5 percent of the total allocation) for control channels, guard bands, and other system overhead. The base case for this study assumes a duplex channel size of 25 KHz and a frequency reuse factor of N=7, which is almost a three-fold increase in capacity relative to the current cellular standard (see Appendix A). In the model, the channel size increases by a factor of 5 percent to 26.25 KHz to account for spectrum overhead. The model considers a range of PCS spectrum allocation sizes between 2 MHz and 40 MHz. This section reports costs assuming 25 MHz, 10 MHz, 5 MHz, and 2 MHz blocks (note that 1 MHz of the allocation is set aside for indoor cordless use, see Appendix A). Based upon these assumptions, Table 1 lists the maximum number of channels available per cell for these spectrum allocation sizes.

Size of Spectrum Allocation			
25 MHz	10 MHz	5 MHz	2 MHz
130	48	16	5

Table 1. Maximum Number of Radio-Based Channels Available Per Cell Site (N=7)

To simplify the model, all cells throughout the PCS network are assumed to be the same size, and enough cells are deployed to provide coverage over the entire service area. This emphasis upon coverage rather than capacity is consistent with the use of low-power handsets that must be in the near vicinity of a cell site to operate. The model considers five cell sizes: (1) a cell radius of 1.6 Km. (equivalent in area to 4096 homes), (2) a cell radius of 800-meters (covering 1024 homes), (3) a cell radius of 400-meters (covering 256 homes), (4) a cell radius of 200-meters (covering 64 homes); and (5) a cell radius of 100-meters (covering 16 homes).

Traditional traffic engineering techniques estimate the number of cells needed to provide service. The model calculates the number of channels needed to accommodate subscriber traffic using the Erlang B formula. The base case assumes a 1 percent grade of service, and that each subscriber offers an average of 0.03 erlangs during the busy-hour. Figure 3 illustrates how many cells are needed as a function of the percent penetration of PCS subscribers and the spectrum allocation size. For example, the number of cells in a PCS network with a 4 MHz block of spectrum increases with the level of service penetration, beginning with seven 1.6 Km. cells at a deployment rate of 2.5 percent, migrating to twenty-five 800-meters cells when deployment reaches 5 percent, and then migrating to one hundred 400-meters cells when deployment approaches 15 percent. The layout of the cable network can be found in Appendix B for each cell size. As shown in these diagrams, cable routes follow a square grid of streets and rights-of-way throughout the serving area.

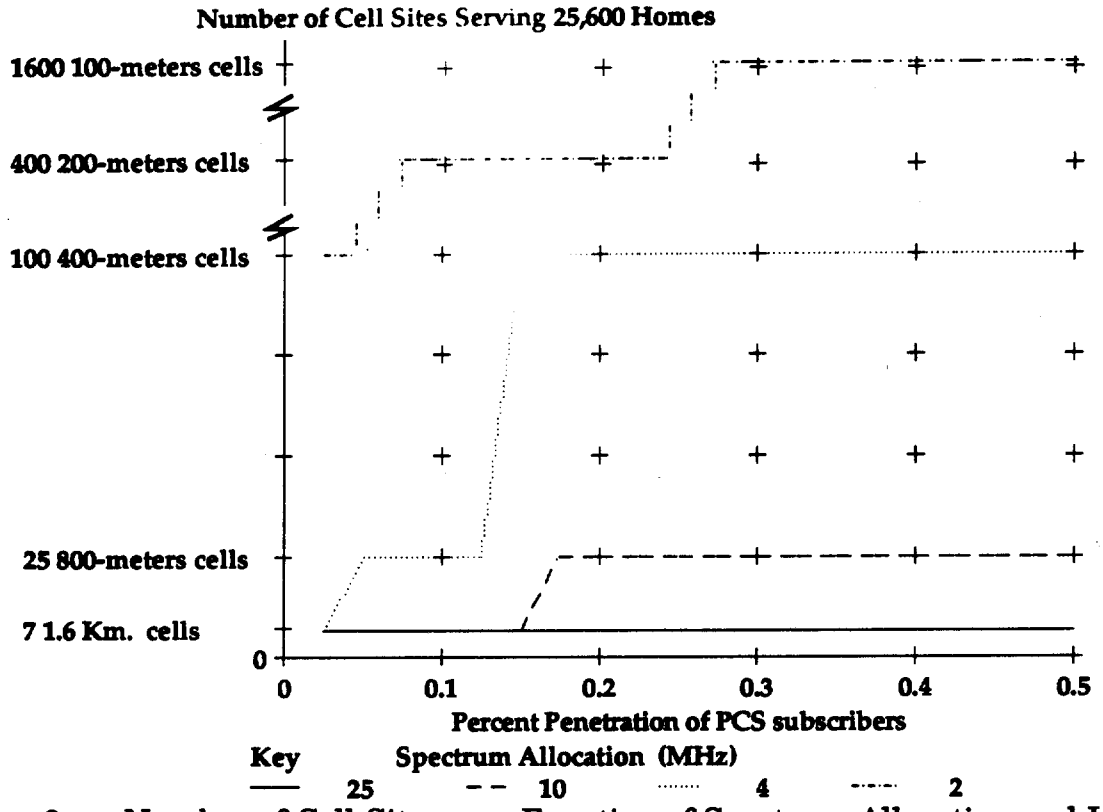

Figure 3. Number of Cell Sites as a Function of Spectrum Allocation and Level of Service Penetration

Estimating the Costs of a PCS Network

The model estimates the costs of building a network offering PCS as defined in Appendix A. Appendix C presents a summary of important base case assumptions within the cost model. PCS network costs can be decomposed into several components, each corresponding to a functional element of the service. Figure 4 illustrates a PCS network consisting of switching, wireline transport, cell site, and handset components. This section reports the estimated costs of each of these network elements, and the total system costs.

The rapid advances of microelectronic technologies have played an important role in the development of wireless electronic components. Cost estimates in this study assume that parts of key functional components, such as base station equipment and handsets, can be implemented as application specific integrated circuits (ASICs) using silicon semiconductor technology. Silicon integrated circuits (ICs) can be used if signal frequencies are below 2.3 gigahertz (GHz) (frequencies above this mark would require that baseband components use more expensive Gallium Arsenide (GaAs) technology (NCR, 1991)). As noted above, the model assumes the spectrum allocated for PCS will be near 2 GHz. Thus, cost estimates of RF equipment in the model assume custom-designed silicon ICs which can be manufactured in large quantities at low cost. All electronic devices

are marked up 40 percent above the component cost to cover the costs of site engineering, field installation, and acceptance testing (Lu and Wolff, 1988).

The cost estimates reported below assume widespread introduction of wireless and optical components over the next five years. Some of the network components reported below are now available off-the-shelf, while others are still in the development stage. Allowances are made for technological advances which yield reductions in cost below today's levels and make deployment at these cost levels unlikely at this time. Large scale deployment implies that PCS and fiber networks have become the standard, and are routinely deployed into residential areas. This section reports the results of the model in dollars *per subscriber*. Unless otherwise specified, all results reflect the long-run average cost per subscriber assuming a household penetration rate of 10 percent, and two subscribers, or users, per home.

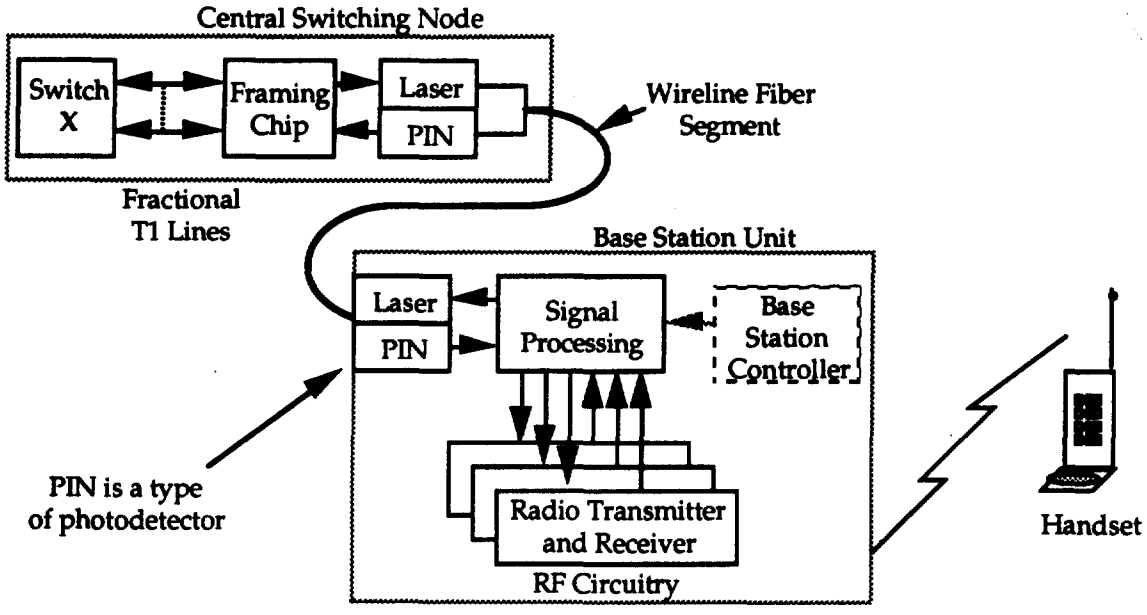

Figure 4. PCS Network Architecture

Network Switching

Estimates of the switching cost are based on a framework reported by Mitchell (Mitchell, 1990).[6] The switch costs reported in this section, unless noted, correspond to the upper bound of the cost data reported by Mitchell. These data appear to best match the description of the metropolitan area setting assumed in

[6]The data reported in Mitchell's study was obtained from local telephone companies in California and Bellcore's Switching Cost Information System, a planning tool commonly used by telephone network planners to evaluate the proprietary price profiles of switching equipment. See (Mitchell, 1990, Section III). Except where noted, it is assumed this cost data in 1988 dollars will be representative of switching costs over the next five years as well.

this study. Under this framework, switching costs are broken down into four categories: (1) fixed costs of "getting started", (2) cost per access line, (3) cost per trunk line, and (4) usage-based costs of the switch matrix and central processor.

"Getting Started" Costs

The start-up costs include the local engineering, power, emergency back-up power, and building costs associated with a central office switch. Mitchell reports these fixed costs are $400,000 in a metropolitan area. Using this figure, the fixed costs of the PCS switch are $78 per subscriber at a penetration rate of 10 percent.

Access and Trunk Line Termination Costs

The number of optical terminations at the switch will vary depending upon the number of subscribers, spectrum allocation, and peak hour traffic characteristics. In general, as subscriber demand increases and the network evolves to microcells, more optical terminations are necessary. For example, the model estimates a network with 800-meter microcells requires 10 fiber terminations, while a network with 400-meter microcells requires 16 terminations.

Calculations assume the cost of terminating a fiber feeder link (up to the T1 rate of 1.5 megabits per second (Mbps)) is $100 for the laser and photodetector circuitry and packaging, plus $150 for other call processing and line organization equipment. With a 40 percent markup for local engineering and testing, the access line card costs $350, equivalent to Mitchell's estimate of terminating a T1 trunk today. At this cost, the model calculates access line termination costs are less than $7 per subscriber for the range of spectrum allocations considered. Trunk line terminations -- where trunks are defined as T1 links spanning to other central office or tandem switches -- are an even smaller cost component. Costing $350 per line, the costs of T1 terminations are negligible at less than $1 per subscriber.[7]

Usage Sensitive Costs

The intensity and characteristics of call usage determine the size of the switching matrix and amount of processing power in the switch. The costs of these usage sensitive factors can be obtained through estimates of the number of call attempts and the originating usage per line during the busy-hour. Mitchell

---

[7]Mitchell reports the fraction of originating traffic in the telephone network requiring an outgoing trunk during the busy-hour is 0.6--the product of the fraction of usage completely dialed and destined for the switching network (0.8) and the fraction of busy-hour usage requiring another switch (0.75). Because a number of alternative routes exist for most interoffice links, most T1 trunk lines are designed for a grade of service equal to 10 percent. Using Erlang B tables, this translates into a carrying capacity of 21.8 erlangs. See (Bellamy, 1982, p. 429). A PCS or cellular network, however, will have a much higher fraction of originating traffic requiring an outgoing trunk, since most calls will be to the existing telephone network. Assuming this fraction is 0.95, 7 T1-trunks are needed to carry the traffic of 10 percent of the households {(25600)(0.10)(2)(0.03)(0.95)/(21.8)}, at a cost of $0.48 per subscriber.

reports costs of $3 per busy-hour attempt and $936 per busy-hour erlang of originating traffic per line.

Mobile communications place additional requirements upon the switching and signalling systems relative to traditional telephone service. First, the tracking and signalling requirements of personal number service require a more powerful switch processor to manage network signalling and database retrieval. As described in Appendix A, the model assumes a 50 percent increase in processing power is needed to execute the more complicated call model associated with the intelligent network. Yet while the processing power of an intelligent network switch will have to be more powerful than today's switch, the cost of processing power has been falling rapidly over the past decade, and will continue to do so over the next five years. Given this tradeoff, the model assumes the usage sensitive costs of the more powerful PCS switch equal today's costs of switching (*i.e.*, $3 per busy-hour attempt and $936 per busy-hour erlang of originating traffic). This leads to a cost of $34 per subscriber for the usage sensitive switching costs of PCS assuming 2 busy-hour attempts and 0.03 erlang of traffic per subscriber (see Appendix A).

More processing capabilities also are needed in wireless networks to provide local mobility management. Base station controllers could take the form of an adjunct processor which directs system handoffs, monitors transmission power levels, and controls frequency assignments for groups of cells. An adjunct processor can be likened to a work station running customized software. Most high-end workstations today have a base cost between $10,000 to $20,000. In addition, the development of the software needed to operate the microprocessor can be costly (software accounts for as much as 70% of the total development costs of a telephone switch). As noted in Appendix A, local mobility management activities will increase dramatically with smaller cell sizes. This additional need for network processing power will arise as rapid advances in microprocessors will continue to lower computing costs. Within this context, the model assumes a cost of $600 per radio channel for mobility management, and that the increment of investment for this control equipment is 50 channels. Thus, a fully programmed adjunct processor costs $30,000 for every 50 radio channels under its control, and is assumed to be installed in 50 channel increments to meet new processing requirements as the number of users grow.

Table 2 lists the total estimated switching costs assuming 10 percent of the households subscribe to PCS. These estimates vary between $125 per subscriber for systems with more than 10 MHz of spectrum using 1.6 Km. cells, $155 per subscriber for a system with 5 MHz using 800-meters cells, and $307 per subscriber for a system with 2 MHz using 200-meters cells. The differences in costs reflect the additional costs of mobility management that arise with the deployment of smaller cell sizes.

Network Component	Estimated Future Cost	Cost Per Subscriber Versus Spectrum Allocation (MHz)				Derivation of Cost for 2 MHz Allocation
		25	10	5	2	
		Switching Node				
Starting Costs	400,000	78	78	78	78	1 node for city: 400K+5120
Access & Trunk Line Termination	350/access line	1	1	2	7	4 Duplex Access Line Terminations: 4 (350) + 205
Usage Sensitive (BH-Busy-Hour)	3/attempt; 936/erlang	34	34	34	34	2 attempts, 0.03 erlangs in BH per sub: 2(3)+.03(936)
Handoff	600/line	12	12	41	188	1600 channels: 1600(600)+ 5120
Total		**125**	**125**	**155**	**307**	

Table 2. Estimated Switching Costs per Subscriber; 10% Penetration (in dollars)

To serve as a check on these estimates, this framework can be applied to telephone and cellular networks and compared with these known switching costs. Assuming 20 percent of the 25,600 households request a second line, the start-up costs for a telephone switch are $13 per line at 100 percent penetration. The switched-star architecture of the telephone network requires that every copper wire pair(s) dedicated to each household must be terminated at the central office with a line card. This card consists of an analog-to-digital converter and other call processing equipment at a cost of $125 per line. Assuming each telephone line originates 2.8 attempts and 0.10 erlang of traffic in the busy-hour, the usage sensitive costs of a telephone switch are $102 per line. Thus, the total switch costs for a telephone network are $241 per line, or $290 per household. This figure checks well with other estimates. For example, (Moondra, 1989) estimated an average cost of $211 per line (1987 dollars) for digital switch hardware, software, cable, and wire for a metropolitan area switch of 26,000 lines.

To estimate the cost of a cellular switch, the figures in Table 2 assuming a 25 MHz spectrum allocation can be used. The start-up and termination costs for the 25 MHz allocation are $263 per subscriber when adjusted to the current cellular penetration of roughly 3 percent of the population. Assuming the usage sensitive and handoff costs of a PCS network are similar to cellular, the model estimates a cellular switching cost of $307 per subscriber, which is consistent with current cellular costs.[8] The reason cellular switching costs are higher than the estimated PCS switching costs is the lower penetration rate assumed for cellular service.

[8]Discussions with cellular service providers suggest that switching accounts for 15 - 25 percent of present cellular system costs, and that total system costs vary between $1000 - $1400 per subscriber. Thus, switching costs would appear to range from $150 - $350 per subscriber. As expected, the switching costs calculated by the model correspond to the upper bound of these cellular switching costs since they are based upon the upper bound of telephone network cost data. Note that the getting started costs account for over 70 percent of the switching cost. The significance of these fixed costs has given rise to "clustering" strategies in the cellular industry which seek to spread the fixed costs of cellular telephone switches over a larger service area, and capitalize upon apparent economies of scale. See "Report of the Bell Companies on Competition in Wireless

Wireline Transport

Another component of the PCS network is the wireline transmission or backhaul segment of the network which connects the switching node to the cell sites. Fiber optic, copper pairs, coaxial cable, and microwave links are different transmission media which could be used for this network. This section estimates the cost of the wireline portion of the PCS network assuming an optical transmission network. Fiber cable was selected because it appears to be the transmission medium of choice for new construction in the subscriber loop given the 5-year time frame. The wireline segment consists of a feeder portion lying between the switch and the remote node, and, when present, a distribution network lying between the remote node and the cell site. For larger cell sizes, the network architecture is a star with dedicated fiber running between the central switching node and each cell site. For smaller cell sizes requiring fiber in the distribution network, the network architecture is a logical star where optical couplers are used throughout the distribution network to save on fiber cable costs.

One approach to network evolution could be to install fiber cable only as additional demand for PCS warrants its deployment due to cell splitting. The drawback of this approach is that it can be costly to return frequently to the same area to install cable. Alternatively, one could pre-install enough fiber at the outset to handle future growth requirements for some period of time. Because of the considerable cost of cable installation, and the potential that PCS growth could be swift, the model assumes enough fiber is pre-installed in the feeder and distribution network to accommodate a 30 percent penetration rate.

All estimates of cable installation costs assume the cable is put below ground in coordination with other underground plant construction, such as gas or power lines, to reduce costs. Burying cable underground, or pulling it through conduit, can be costly depending upon local conditions. Underground construction in new residential areas will cost substantially less than existing neighborhoods where the repair of streets, lawns, and other developments can slow down the pace of installation.[9] PCS systems will eliminate a considerable portion of cable installation costs by using a radio link in the distribution network. The model assumes the installation cost of distribution cable in a new construction area is $4 per meter. Installation of the feeder cable, which runs deeper than distribution

---

Telecommunications Services, 1991", filed for United States v. Western Electric Co. and AT&T, U.S District Court for District of Columbia, Civil Action No. 82-0192 (HHG).

[9]The assumption that construction takes place in a new neighborhood has little impact on this analysis of PCS systems. As will be shown below, almost all of the cable installation costs for the PCS network occur in the feeder network, where cost estimates assume cable is passing through existing areas. Moreover, the low cost of underground cable installation assumed above is roughly commensurate with the costs of installing an aerial cable system, as is the norm in most neighborhoods today.

cable and passes through existing neighborhoods, costs $12 per meter (Kerner, Lemberg, et al., 1986). Installation of feeder and distribution cable includes inner duct at a cost of $1.15 per meter and $0.75 per meter, respectively.

Larger cells (above 800-meters) only require fiber in the feeder network at a cost of $0.10 per meter and a cable sheath cost of $4 per 50-fiber cable-meter or $2 per 20-fiber cable-meter. As the number of users and traffic levels grow, the size of the cells decrease and fiber is extended deeper into the network and closer to the end user. To reduce network costs, the network includes optical couplers, at a cost of $25 per port, to form passive optical networks in the distribution network as smaller cells are deployed. Thus, up to 256 households are served by only 2 fibers (one for each direction) using 4-fiber cable in the distribution network with a sheath cost of $1 per cable-meter. A protection factor of 100 percent in the feeder and distribution network specifies the percentage of dark fiber installed to cover fiber failure and future growth needs.[10]

Table 3 lists the total costs of the wireline transmission segment as calculated by the cost model under these assumptions. Again cost estimates vary with the size of the spectrum allocation due to the number of cells required in the network to meet subscriber demand. As determined within the model, these costs reflect the use of 1.6 Km. cells for the 25 MHz and 10 MHz allocations, 800-meters cells for the 5 MHz allocation, and 200-meters cells for the 2 MHz allocation.

[10]To assure adequate flexibility and organization, fiber pigtails attach the fiber to network equipment at the central office, remote nodes, and cell sites. The fiber pigtail is a segment of fiber several feet in length with a connector on one end that joins to a patch panel and bare fiber on the other end which splices to the fiber cable in the network. Fully installed pigtails and patch panels cost $50 and $25 per fiber, respectively, for a total cost of $75 per fiber. The model assumes low loss, multi-fiber fusion splices join the feeder cables, while higher loss mechanical splices join the distribution fiber. The cost of either splicing method, including installation, is $15 per splice. In the feeder loop, splices occur every 915 meters (3 Kft) corresponding to the manufactured length of the fiber.

Network Component	Estimated Future Cost	Cost Per Subscriber Versus Spectrum Allocation (MHz)				Derivation of Cost for 2 MHz Allocation
		25	10	5	2	
		Feeder Network				
Single Mode Fiber	0.1/meter	12	12	30	30	One 20-fiber cable, 3072 m.: 0.1 (20) (3072) ÷ 205
Cable Sheath (Holding 20-fibers)	2/meter	18	18	30	30	One 20-fiber cable, 3072 meters: 2 (3072) ÷ 205
Inner Duct, Splice	1.15/meter, 15	19	19	22	22	(15(20)(3)+1.15(3072)) ÷ 205
Remote Enclosure, Patchcords	1000, 75	7	8	11	11	16 active fibers, 1 enclosure: (1000+(2)(8)(75)) ÷ 205
Cable Installation	12/meter	180	180	180	180	12 (3072) ÷ 205
		Distribution Network				
Single Mode Fiber	0.1/meter	0	0	4	29	4-fiber cable: (.4)(14.74K) ÷ 205
Cable Sheath	1/meter	0	0	9	71	2 Km: 1 (14.74K) ÷ 205
Cable Installation	4/meter	0	0	24	243	1.2 Km Trench: 4(12.46K) ÷ 205
Inner Duct	0.75/meter	0	0	5	46	1.2 Km Duct: 0.75(12.46K) ÷ 205
Patchcords, Couplers, Splices	75, 25, 15	0	0	6	30	(75(68) + 25(24) + 15(32)) ÷ 205
Total		**236**	**237**	**321**	**692**	

Table 3. Cost per Subscriber of Wireline Transport (in dollars); 10 percent penetration rate of PCS

PCS Cell Sites

PCS cell sites provide the interface between the wireline transmission segment and the radio transmission channel. Figure 4 shows the network equipment necessary to perform this function, including the wireline network termination equipment, a system controller, and radio frequency (RF) transmitters and receivers.

Similar to the switching node, the cost of terminating an optical fiber link (usually at some fraction of the T1 rate) is $100 for the laser and photodetector circuitry and packaging. With a 40 percent markup for local engineering and testing, this remote line card costs $140. The cost of the antenna site varies with the size of the cell. In general, larger cells require higher antennas heights for signal coverage throughout the service area. For example, antenna heights for microcells may be above 20-meters for a cell radius of 1 - 2 Km., to streetlight level (10-meters) for 200-meters microcells. Today, a large cell site costs $300,000, and it is hoped that smaller cells serving between 80 and 250 households will cost less than $25,000 (Cox, 1989). Accordingly, the model assumes land and antenna costs are $100,000 for 1.6 Km cells, $20,000 for 800-meter cells, $5000 for 400-meter cells,

$1000 for 200-meter cells, and $100 for pole-mounted 100-meter cells.[11] The cost of the terminal casing which houses the cell site on a streetlight is $30 including installation.

Three important factors which determine the cost of cell site RF equipment are the carrier frequency, the allowed level of transmitted power, and the radio access technology. It appears that all frequencies between 500 MHz and 3 GHz are technically suitable for PCS (CCIR, 1990b). The suitability of frequencies above this band for PCS is under study.[12] Thus, preferences for certain frequency bands are likely to be driven more from economic concerns of equipment cost rather than concerns for propagation. As a general rule, service providers predict that the cost of RF equipment increases roughly 10 percent for every doubling in frequency (GTE, 1991). Thus, using 2 GHz frequencies for PCS suggests RF equipment will cost roughly 15 percent more than comparable cellular circuitry operating at 800 MHz.

The allowed levels of transmitted power between the cell site and base station is another cost factor. In general, equipment costs rise as the level of transmitted power increases. PCS might be a low-power technology with transmitted power levels below 50 mW versus the 600 mW - 5 W power levels used in cellular (CCIR, 1990b). Accordingly, RF equipment in the PCS base station could cost less than RF circuitry in a cellular base station, although the magnitude of these cost savings is highly uncertain and closely related to the complexity of the radio access technology.

In the past, the high-power RF circuitry in a cellular base station cost roughly $4000 per channel (Hatfield and Ax, 1988). Today, a microcell might cost $50,000 (Lynch, 1991), or $1250 per channel assuming a base station capacity of 40 channels. While the additional complexity of TDMA and CDMA radio access technologies might increase the cost per RF channel (or its equivalent with spread spectrum), the additional circuits per RF channel are likely to lead to lower RF equipment costs per subscriber (Calhoun, 1988). Thus, one study estimates that PCS base stations may cost $14,000 for a 44-channel base station with a radius of 200-meters, or $300 per channel (Lipoff, 1992). Given the trade-off between transmitted power and technological complexity, the model assumes the RF

---

[11]Cell site costs will vary widely with local conditions. The cost assumptions above assume that citing costs will decrease significantly with the size of the microcell and that there are no restrictions on the placement of the cell sites throughout the residential area. In fact, a particular cell site may be unacceptable for unpredictable geographic or neighborhood concerns. The size and location of antennas has historically been a controversial issue for wireless services, particularly in residential areas. Modifications to the network to meet these concerns will add to the costs assumed above.

[12]For example AT&T is conducting field tests in the frequency range of 5.9 - 6.4 GHz. See *The Wall Street Journal*, "AT&T Seeks Pocket Phone Test Clearance," 6/25/91, B1. Also, the Suite 12 group is investigating the use of the 28 GHz band for PCS applications. See *footnote 2*.