corresponds to 512 time samples or 10.667 ms at a sampling frequency of f_S = 48 KHz.

Prior to applying the MDCT a windowing function is applied to the input block of 1024 time samples. This windowing increases the spectral resolution within the frequency domain and helps to prevent boundary effects when the data blocks are overlap-added after inverse transformation at the output of the decoder. The shape of windowing functions for consecutive overlapping data blocks is shown in Figure 7.

The output of the transform operation consists of 512 real numbers giving a spectral representation of the transformed time signal. After encoding and transmission of the spectral representation, the inverse transform is applied at the decoder. The resulting 1024 time samples are being windowed with the same windows shown in Figure 7 and then added with 50% overlap to form the digital output signal.

The combination of MDCT with TDAC leads to a high resolution in the frequency domain as well as to an efficient implementation of the transform. It is inherent to this type of frequency-domain processing, that, in the absence of any further processing of the frequency-domain data, an inverse transformation at the decoder will produce an output signal that is an exact replica of the original input signal. This transformation is therefore labeled to have the property of *"exact reconstruction"*.

Adaptation of Length of Transform:

The MDCT as well as any other transform encoding method increases the available resolution in the frequency domain (from 24000 Hz to 24000/512 = 46.9 Hz), but consequently decreases the available resolution in the time domain (from 20.8 µsec to 10.67 ms). This is of no harm as long as the audio signal can be considered as being stationary during the block-time of 10.67 ms and precisely the reason why good use can be made of psycho-acoustic encoding. Problems can arise with any kind of transient audio signals like e.g. triangle, castanets and so on. The quantizing noise introduced during the encoding operation will normally be masked by the signal. This may not be the case, when the signal is transient and e.g. starting from silence to a large value within one block-time of 10.67 ms.

The duration of the pre- and post-stimulus masking effects of the human ear is in the order of 2 ms only. This would limit the length of the time blocks for transform coding to about 256 samples, but it has also been shown, that the efficiency of any transform coding method is highest for long blocklengths.

The solution used within the ASPEC algorithm is to use long blocklengths as described above and to adaptively switch to shorter blocklengths (1/4) in case a transient is detected within the audio signal.

In order to avoid discontinuities in the audio signal, the shape of the applied windowing functions has to be adapted in a proper way. An example of such an adaptation is shown in Figure 8.

5. Noise Shaping and Bit Allocation

Due to the quantizing and encoding of the spectral coefficients, the audio signal at the output of the decoder cannot be an exact replica of the input signal to the encoder. The effect of quantizing can best be modeled as the addition of a *"quantizing noise"* to the otherwise unaltered signal. The spectral shape of this quantizing noise can be influenced during the quantization (*"Noise Shaping"*). If this is done in a proper way, the quantizing noise can be kept below the masking threshold of the ear. Consequently there will be no perceptible difference between the original audio signal at the input of the encoder and between the output signal of the decoder.

As a first step the masking threshold for the momentary signal has to be calculated. For this the input spectrum is divided into critical bands and the energy is computed within each band. Then the convolution of these energies with the basilar membrane spreading function delivers an *"auditory spectrum"*. The spreading function represents the masking from one critical band to another. It is approximated by an asymmetric triangle. The slope towards upper critical bands equals -10 dB/Bark and the one towards lower critical bands is -27 dB/Bark.

The masking threshold is finally obtained by applying an offset and overlaying the absolute threshold of hearing. The threshold, thus calculated, is then expanded to all 512 spectral coefficients.

The actual way of computing the threshold of hearing very much influences the final audio quality obtainable with a transform coding algorithm. Generally there has to be some compromise between

calculation power within the encoder hardware and quality, but this is not a problem within a system designed for broadcasting. The audio encoder at the site of the transmitter has only to be provided once and cost, volume, and power consumption are not equally important as for the audio decoder within a TV receiver.

More specific information about the calculation of hearing thresholds can be found in references 6 and 7.

Within the ASPEC algorithm quantizing and bit allocation are performed together with part of the entropy coding within two iterative loops: The inner loop starts the quantization by counting the number of bits, that would be needed for the entropy code. This can be done via a table look-up without actually doing the Huffman encoding. When the number of bits turns out to be too large for one data frame, the stepsize of the quantizer is increased and this process is iterated until the Huffman code will fit into the data frame. Now the level of the quantizing error can be calculated simply by taking the difference between the input spectrum and the quantized spectrum. This difference is compared against the previously calculated threshold. If there is a violation of the rule, that the quantizing error should not exceed the threshold of hearing, the stepsize for the quantizer within the respective critical band is decreased, thereby decreasing the quantizing noise within that band. Afterwards the inner quantizing loop is started again and a new difference spectrum will result.

The whole encoding process will be iterated several times within the outer encoding loop until all threshold violations have been removed. This *"analysis by synthesis"* process develops a quantized version of the spectrum, which meets the noise requirements of the masking threshold, and adjusts the quantized spectrum such that the encoded bit stream bit-rate requirements are achieved. The accuracy of this process is only limited by the available processing power within the encoder.

6. Entropy Coding

The quantized spectral coefficients are entropy coded by Huffman coding procedure. This procedure and the according tables are also adapted to the shape of the spectrum of each individual coding block.

Generally a two-dimensional Huffman code is used, i.e. two spectral coefficients are encoded together into one Huffman code word. More than one Huffman code table is used in order to generate a bitstream with as small a number of bits as possible. For this the quantized spectral

coefficients are divided into two sets, where one of the sets (generally in the higher frequency range) only contains values of -1, 0, +1, and where the other set (generally in the lower frequency range) contains larger values. Two different Huffman tables are used to encode the set of small values, depending on whether there are more values of -1 or of +1 within the set. Five different tables can be selected for the encoding of the set of larger values. The selection of one of these tables is dependent upon the distribution of the larger values and is always made in a way to minimize the overall length of the encoded bitstream.

7. The ASPEC Bitstream and Data Frame Structure

The serial transmission of ASPEC encoded audio data with 256 kbit/s is accomplished by a bit-by-bit interleaving of two individual 128 kbit/s bitstreams, one for the left and the other for the right stereo audio channel.

Each individual bitstream is divided into frames, each frame being headed by an 8-bit frame synchronizing word. The distance between frame synchronizing words changes between 1365 and 1366 bits, depending on the mutual accuracy of the 48 KHz audio sampling frequency and the 256 KHz channel transmission frequency. The exact value is:

$$\text{number of bits} = 512 * 128000 / 48000 = 1365.333$$

The frame synchronizing word is followed by a fixed number of bits (about 100), which are used to signal general information about the shape of the spectrum and about the encoded bitstream, for instance the scaling factors for the critical bands, the stepsize of the quantizers, and information about the Huffman code tables in use. These bits have a high priority for error protection and are therefore currently protected with 3-error correcting Golay codes.

The remaining bits of each frame are then used for the Huffman encoded bitstream together with parity bits for BCH error correction.

For the over-the-air broadcast service there are several possible data frame structures. The frame structure will include frame alignment word, channel identification bits, audio bits, and parity bits of the FEC. The ratio of the total bit rate prior to transmission, to the audio encoded bit rate will be no more than 4/3.

8. Forward Error Correction

In the hardware to be provided to the ATTC, there are two levels of error correction: one in the audio compression (described in section 7) and the other in the data modem. The system will be implemented with a rate 3/4 convolutional code in the modem. Inexpensive alternatives for consumer electronic implementation will be considered in the future.

9. Data Modulation

The modulation will be Quaternary Phase Shift-Keying (QPSK).

10. ATTC Hardware Implementation

The input to the audio encoder will be an analog source. Options to connect to a digitized (16 bit linear PCM, sampled at 48 KHz) source will also be provided. Two channels (encoded mono channels) will be generated by the encoder. These will be multiplexed to obtain a serial bitstream. The bitstream will be FEC encoded in a modulator producing a data carrier at IF, which will be combined with the video at IF. At the receiver, the IF will be fed to the demodulator and its output will be demultiplexed. This is given as the input to the audio decoder. The decoder output will be analog. The preceding implementation of framing, FEC, modulation and demodulation will give the performance equivalent to that of a final cost-effective system.

11. Expected Audio Performance

These are described in the attached "Responses to Systems Information Questionnaire". Additional information is as follows.

Data Clock for audio codec:
Internal: 256 KHz +/- 50 ppm
External: 256 KHz +/- 500 ppm

Error Correction (in the audio compression subsystem):
Error correction with 8.4% redundancy is contained within the 256 kbit/s data stream. Two priority levels are being used, 3 error-correcting Golay code and 1 error-correcting BCH codes. (This error correction encoding within the audio data stream will be integrated with FEC in the modem at future date.)

Audio Time Delay:
80 ms nominal, final value t.b.d.

Input and Output Interfaces:
digital I/O with AES/EBU interface, 16 bit - 48 KHz
analog input to be adapted to studio level and wiring
analog output to be adapted to studio level and wiring

12. References

1. System Description of Advanced Compatible Television, December 31, 1989. Submitted by David Sarnoff Research Center, Princeton, NJ.

2. J. V. Tobias, "Foundations of Modern Auditory Theory", New York: Academic Press, Chapter 5, 1970.

3. Richard H. Elmer, "Masking Patterns of Tones", J. of the Acoustical Soc. of Am., 31(5), Aug., 1959.

4. Richard H. Elmer, "Masking by Tones vs Noise Bands", J. of the Acoustical Soc. of Am., 31(9), Sept., 1959.

5. E. Zwicker and R. Feldtkeller, "Das Ohr als Nachrichtenempfanger" (The Ear as a receiver of Information), S. Hirzel-Verlag, Stuttgart, 1967.

6. Mahieux, Petit, Charbonnier, "Transform Coding of Audio Signals Using Correlation Between Successive Transform Blocks", Proceedings of the IEEE Int. Conf. on ASSP, p. 2021-2024, 1989.

7. J. Johnston, "Transform Coding of Audio Signals Using Perceptual Noise Criteria", IEEE J. on Sel. Areas in Communications, 6, p. 314-323, 1988.

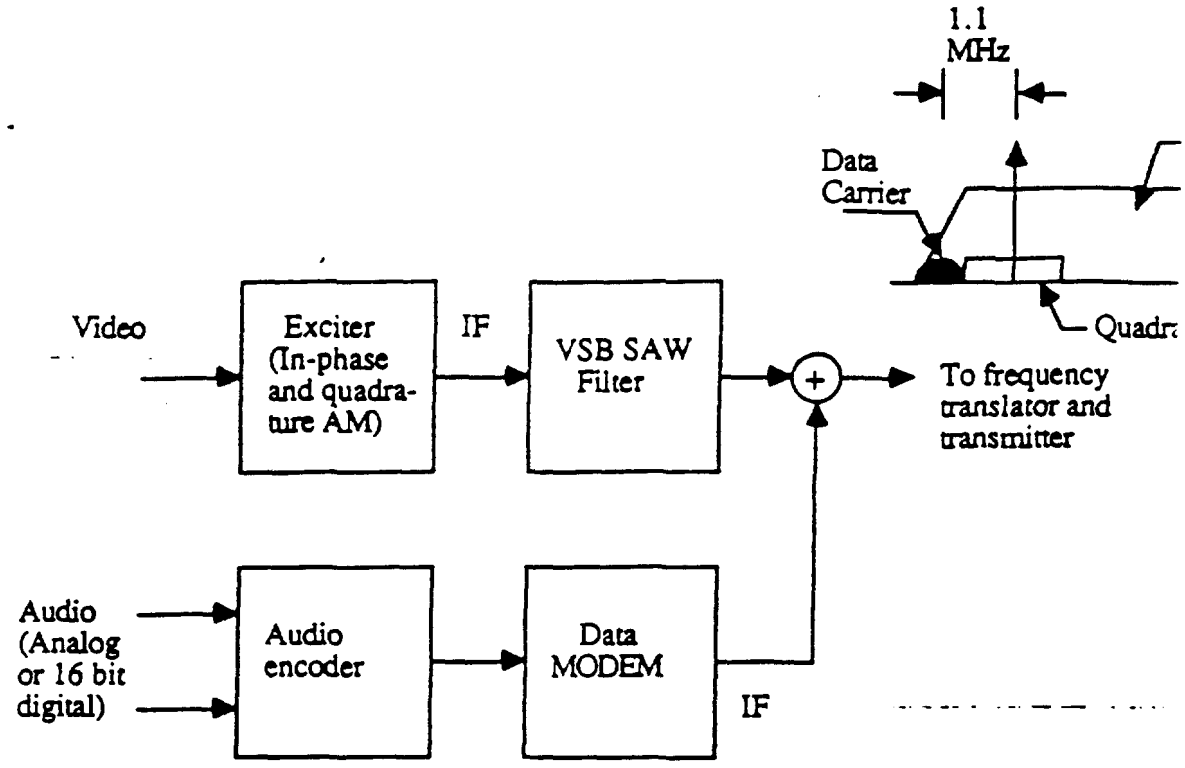

Fig. 1 Combining data and video carriers at the broadcasting station

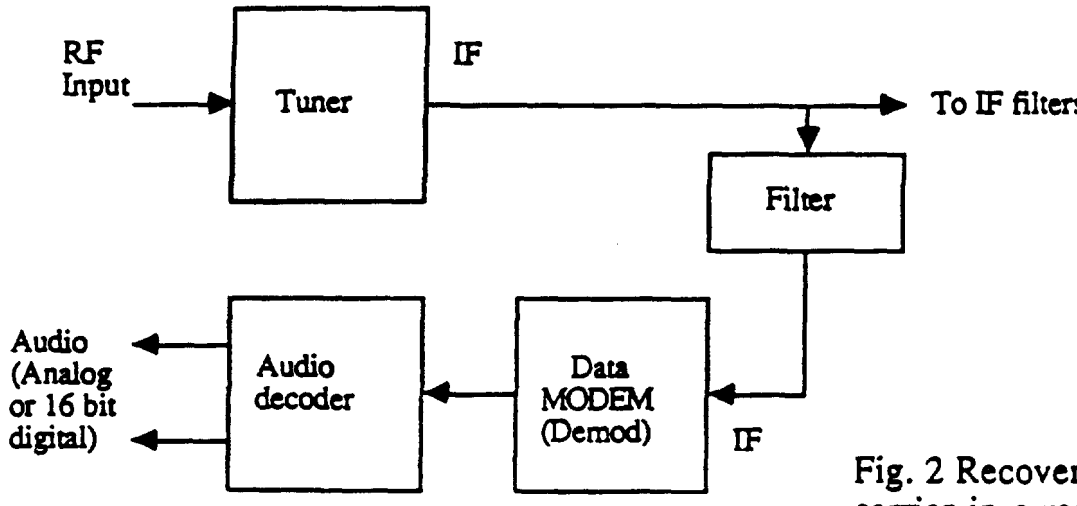

Fig. 2 Recovery of carrier in a receive

Band number Hz	Lower Edge Hz	Center Hz	Upper Edge Hz
1	0	50	100
2	100	150	200
3	200	250	300
4	300	350	400
5	400	450	510
6	510	570	630
7	630	700	770
8	770	840	920
9	920	1000	1080
10	1080	1170	1270
11	1270	1370	1480
12	1480	1600	1720
13	1720	1850	2000
14	2000	2150	2320
15	2320	2500	2700
16	2700	2900	3150
17	3150	3400	3700
18	3700	4000	4400
19	4400	4800	5300
20	5300	5800	6400
21	6400	7000	7700
22	7700	8500	9500
23	9500	10500	12000
24	12000	13500	15500
25	15500	19500	

Table 1
Critical band frequencies

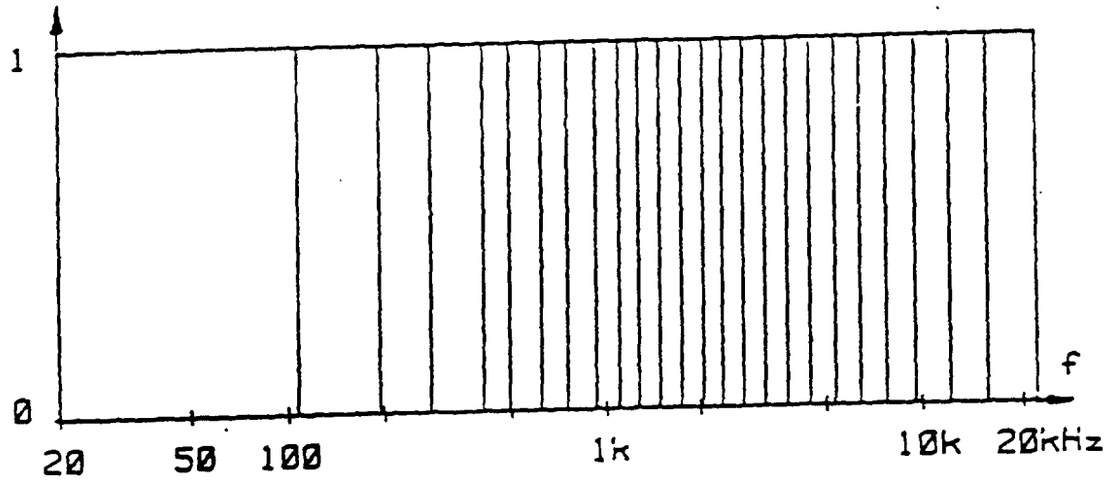

Fig. 3 Critical band frequencies

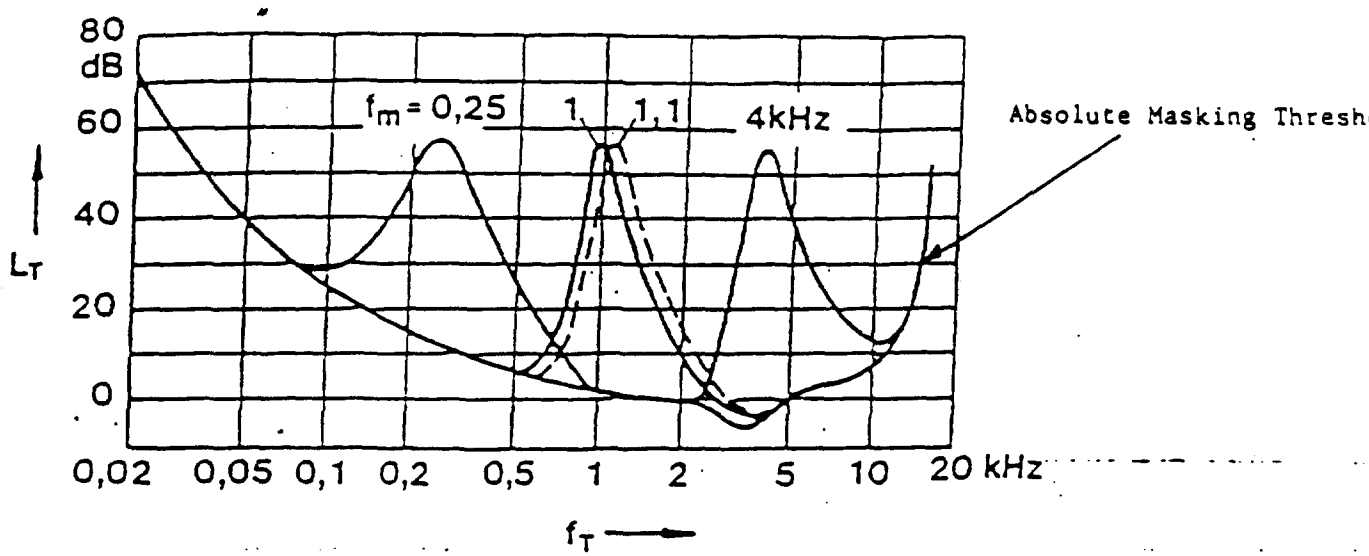

Fig. 4 Masking thresholds obtained with narrowband noise of 60 dB SPL.

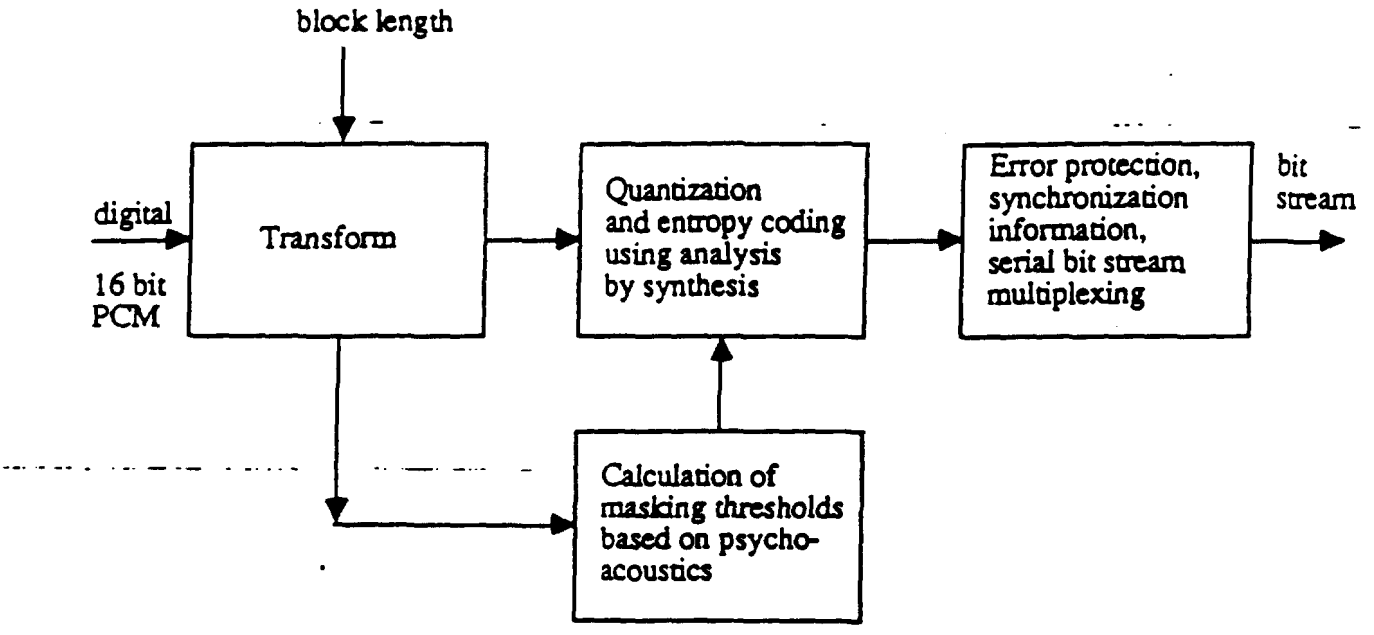

Fig 5 Single-channel Encoder Block Diagram

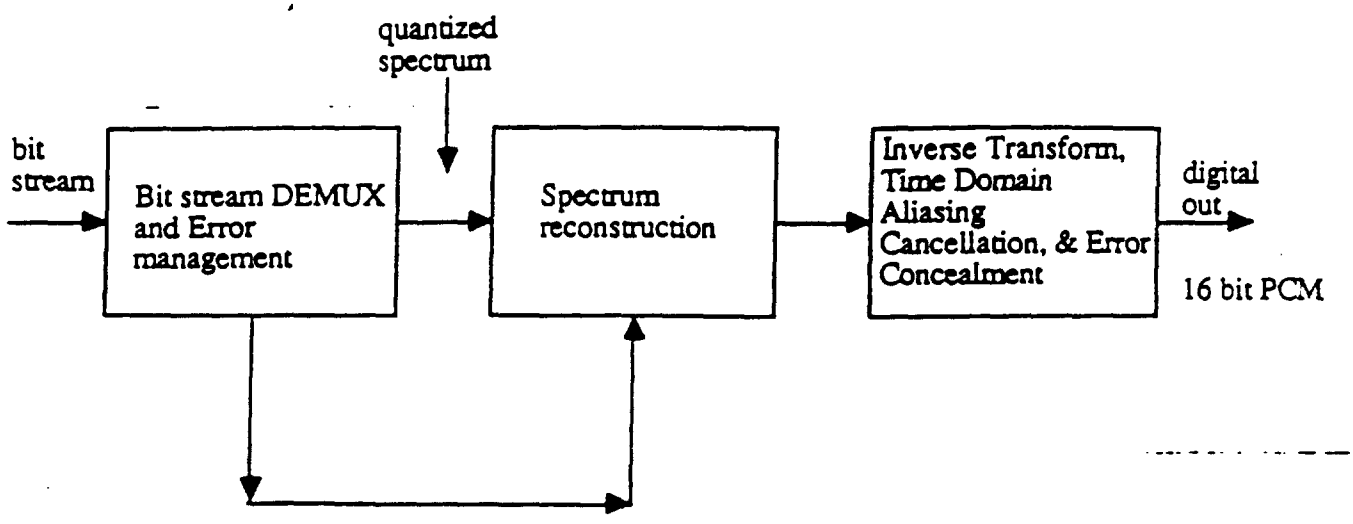

Fig 6 Single-channel Decoder Block Diagram

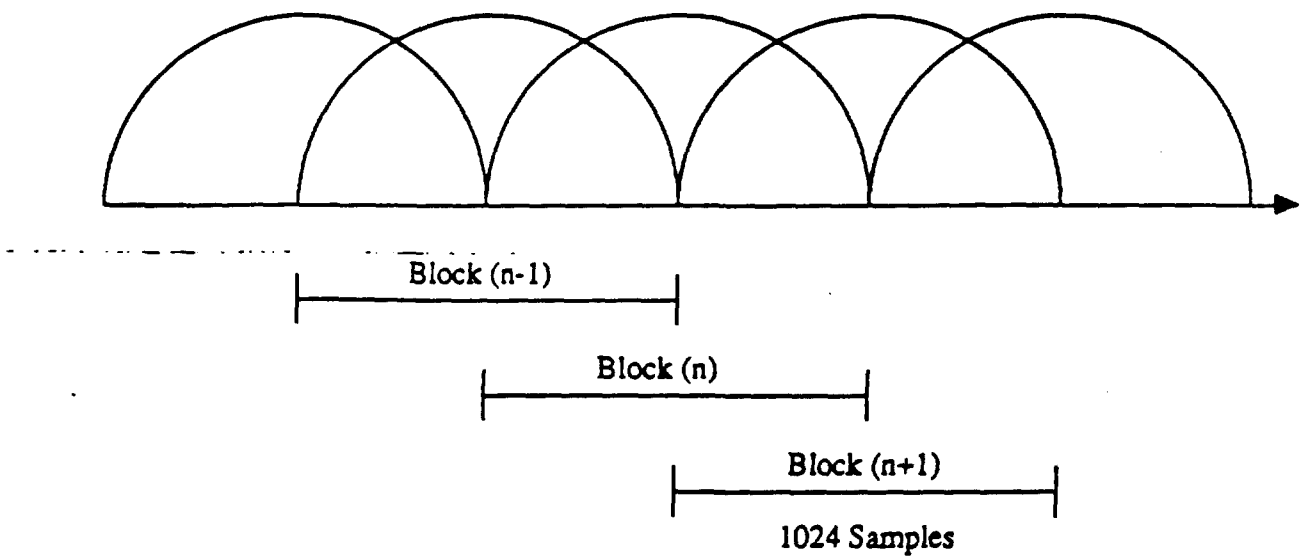

Fig 7 Windows for Consecutive Overlapping Data Blocks

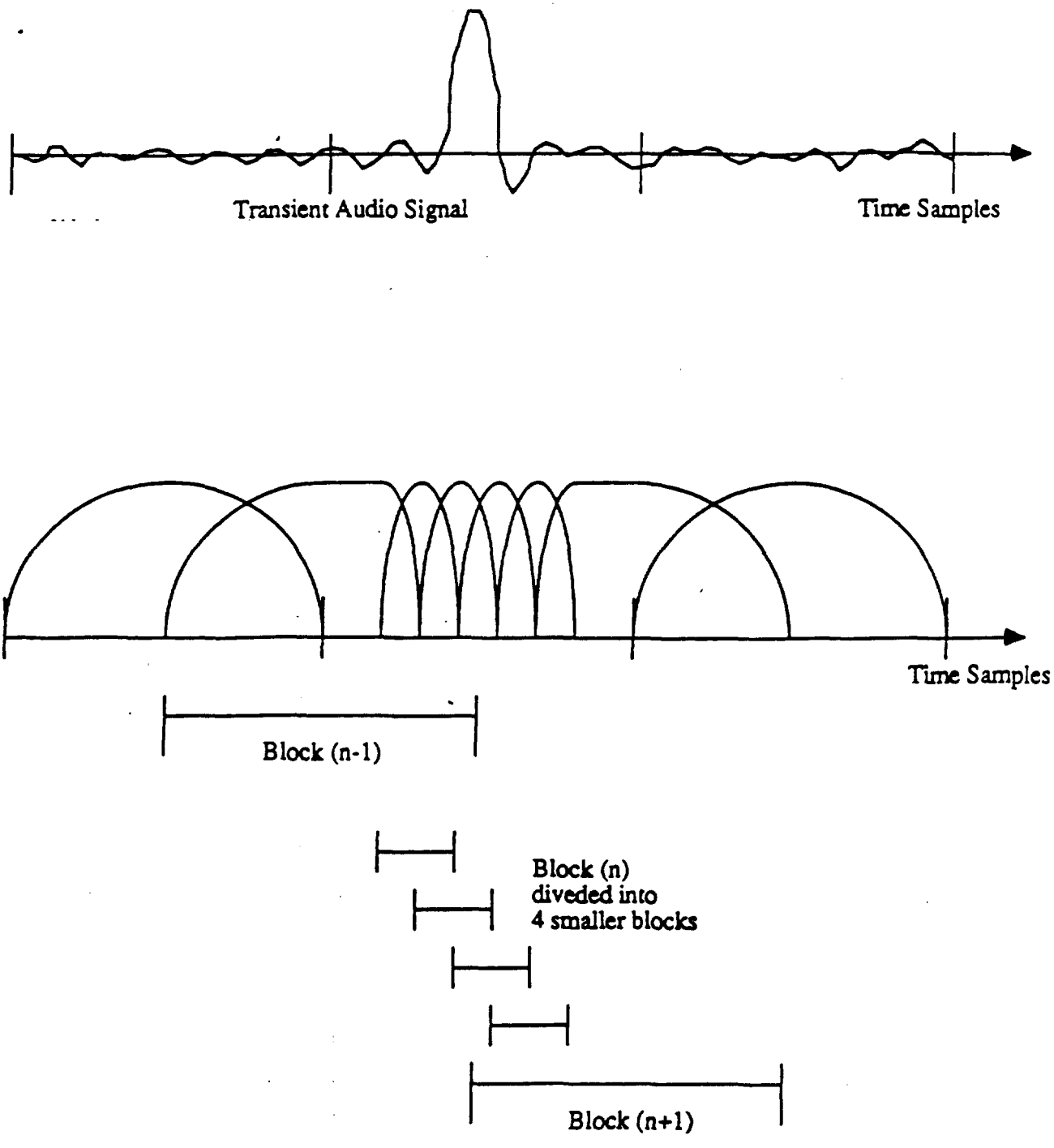

Fig 8 Consecutive overlapping blocks of different blocklengths in case of a transient signal

Attachment E

SS - 0285
07 Mar 91

SSWP2-0626
11 FEB 91

Federal Communications Commission
Advisory Committee on Advanced Television Services

Systems Subcommittee
Working Party 2: ATV System Evaluation and Testing

Fourth Interim Report
February 1991

CONTENTS

1. **Introduction and Summary**

2. **Test Procedures**
   - 2.1 Test Procedure Documents
     - 2.1.1 Test Management Plan
     - 2.1.2 Objective Test Procedures
     - 2.1.3 Cable Television Test Procedures
     - 2.1.4 Video Subjective Test Procedures
     - 2.1.5 Audio Subjective Test Procedures
     - 2.1.6 Field Test Procedures

3. **Test Facilities**
   - 3.1 Advanced Television Test Center (ATTC)
   - 3.2 Cable Television Laboratories (CableLabs)
   - 3.3 Advanced Television Laboratory (ATEL)

4. **Test Schedule**

5. **Issues and Future Work**
   - 5.1 Test Procedures for Digital Systems
   - 5.2 Audio Subjective Testing
   - 5.3 System Specific Tests
   - 5.4 Laboratory Test Management Plans
   - 5.5 Field Tests
     - 5.5.1 Procedure Modifications
     - 5.5.2 Resources
     - 5.5.3 Generic Digital Field Tests

Appendices

I: Test Management Plan
II: Objective Test Procedures
III: Cable Television Test Procedures
IV: Video Subjective Test Procedures
V: Audio Subjective Test Procedures
VI: Field Test Procedures
VII: Letter concerning Field Tests
VIII: Test Schedule
IX: Documents supporting new test procedures for digital systems
X: Documents concerning generic digital field tests

1. Introduction and Summary

Working Party 2 was established by the Systems Subcommittee to conduct tests of proposed systems and provide information to help the Advisory Committee in its recommendations to the FCC. The mission of the organization was described in the report submitted in March 1989 (SSWP2-0120, REV 17 Mar 89) and has not changed since then.

The officers (and affiliations) of SSWP2 are: Mark Richer (Public Broadcasting Service), Chairman; Walt Ciciora (American Television and Communications), Vice Chairman; George Hanover (Electronics Industries Association), Vice Chairman. The Secretary is Alan Godber (NBC). The only change since the previous report is that Mr. Richer has replaced Mr. Ben Crutchfield (Advanced Television Test Center) as Chairman. SSWP2 would like to recognize Mr. Crutchfield's valuable leadership and contributions to the work of the Advisory Committee.

Since the last Interim Report, several new SSWP2 Task Forces were formed. The Task Force on Test Prioritization chaired by Lynn Claudy (National Association of Broadcasters) reviewed and optimized the test procedures with the goal of minimizing the amount of time it should take to test each system. The Task Force on Audio Test Procedures chaired by Donald Lockett (National Public Radio) developed both the objective and subjective audio test procedures. The Task Force on Field Test Procedures is chaired by Jules Cohen (Jules Cohen and Associates).

SSWP2 has held a total of 24 meetings to date, all in the Washington, D.C. area. Average attendance for the meetings has been 30.

The primary focus of SSWP-2's efforts have been the completion of the laboratory test management plan, the laboratory test procedures and the field test plan. SSWP-2 has also begun efforts to help arrange for the resources needed to conduct the field tests.

Future work of SSWP-2 includes:

Modifications to the test procedures as necessary including those required to adequately evaluate digital systems.

Working with the Advisory Committee leadership to obtain the resources necessary to conduct the audio subjective tests.

Development of system specific tests as recommended by SSWP-1.

Obtaining laboratory management plans from ATTC, CableLabs and ATEL.

Management and oversight of the laboratory tests as required by the Test Management Plan.

Continue efforts to plan the field test program including supporting the Advisory Committee and ATV System Proponents efforts to obtain the necessary resources.

2. Test Procedures

All test procedures have been revised and approved by SSWP2. It is important to note that while the documents are now complete, the complexity and innovative nature of both the proponent systems (and of the procedures necessary to test them), ensure that modifications to the test plans will be necessary as the systems move toward final certification and the test laboratories move closer to conducting the tests. This need for continuing modifications to the test procedures was identified in the Systems Subcommittee Third Interim Report.

2.1 Test Procedure Documents

The Test Management Plan and Test Procedure documents are included in Appendices I through VI. A summary of the major changes is provided below.

2.1.1 Test Management Plan (SSWP2-0124)

The Test Management Plan now requires proponents to submit complete ATV Systems, including audio subsystems for testing.

The document now includes an outline of the certification process and an option for system specific tests (to be developed by SS/WP2, based upon recommendations from SS/WP1) has been added.

The revised document clarifies the action necessary by the test laboratories when any major anomaly is encountered in carrying out the approved Test Procedures.

2.1.2 Objective Tests (SSWP2-0189)

All references to testing augmentation systems have been removed and the test procedures for both static and dynamic resolution have been completed. Audio objective test procedures and specific procedures for RF power metrology are now included.

Tests were added and procedures developed to evaluate potential degradation to the vertical blanking interval of NTSC services such as closed captioning and procedures have been added for evaluation of interference to BTSC (NTSC) audio. Test Procedures were added to evaluate the compatibility of Enhanced NTSC systems with consumer VCRs.

2.1.3 Cable Television Tests (SSWP2-357)

The cable test plan now includes testing through optical fiber systems. Tests with microreflections have also been added.

2.1.4 Video Subjective Tests (SSWP2-0390)

Based upon input from the SS/WP2 Task Force on Prioritization, major changes were made to the Video Subjective Test Plan to ensure efficient testing of ATV systems.

2.1.5 Audio Subjective Tests (SSWP2-0533)

This new document describes subjective evaluation of proponent audio systems by experts. There are two types of subjective audio test, quality and transmission impairment.

2.1.6 Field Test Procedures (SSWP2-0601)

This new document describes the Field Test Procedures for both terrestrial transmission and cable. "The primary goal of the field testing program is to verify the performance and operability of the selected ATV system(s) under real world conditions. In addition, this testing phase should be used to point system flaws that are not uncovered through laboratory testing. "

The goal of the Field Test Task Force was to develop a plan that would be consistent with the Advisory Committee schedule. There is some concern as to whether that schedule does in fact provide enough time to conduct sufficient testing in the field. Some of these concerns are reflected in the letter from the Chairman of the Field Test Task Force in Appendix VII (SSWP2-0610).

3. Test Facilities

Three organizations have made commitments to conduct the SSWP-2 laboratory test procedures. Descriptions of the organizations and status of the test facilities are as follows:

3.1 Advanced Television Test Center (ATTC)

The ATTC was established in 1988 to conduct thorough and impartial tests on ATV systems and provide results to the FCC, its Advisory Committee and the broadcast industry. ATTC is sponsored by CBS, Capital Cities/ABC, EIA, INTV, NAB, NBC, PBS, and MSTV; and is working in cooperation with Cable Television Laboratories, Inc. and the Advanced Television Evaluation Laboratory.

ATTC has supported development of the Advisory Committee's detailed Test Procedures and, on the basis of the now-completed Procedures, has developed facilities to undertake laboratory-based objective, broadcast-related, as well as joint broadcast-cable, tests. In addition, ATTC will prepare digital video tape recordings for non-expert viewer subjective tests of interference effects and basic received quality to be conducted at ATEL. ATTC will also prepare digital audio tape recording for subjective listening tests [to be conducted at a laboratory to be designated].

Preparation of ATTC laboratory space has been completed at its Alexandria, Virginia site, and all major equipment items have been designed, purchased, and either installed or under construction. The first of six ATV systems on the Advisory Committee's "Test Sequence & Calender" (November 14, 1990) is ACTV, and is expected to be delivered for testing to begin April 1991.

3.2 CableLabs

Cable Television Laboratories, Inc. (CableLabs) was established in May, 1988 as a research and development consortium of cable television system operators representing more than 85% of the cable subscribers in the United States. It also has members representing 20% of Canada. Cable Labs funds R & D projects that will help members take advantage of future opportunities and meet future challenges in the television industry. It also transfers relevant technologies to member companies and industry suppliers. In addition, CableLabs acts as a clearinghouse to provide information on current and prospective technological developments that are of interest to the cable television industry.

CableLabs' ATV testing effort is centered in leased offices and laboratory space at ATTC in Alexandria, Virginia. The Cable Test System (test bed) has been installed at CableLabs' facility at the ATTC, and is being debugged and interfaced to the ATTC plant. It is expected to be ready for operation in time for the joint ATTC/CableLabs run through of testing, and for the start of official testing on April 12th.

3.3 Advanced Television Evaluation Laboratory (ATEL)

The Advanced Television Evaluation Laboratory (ATEL) is an off-premises laboratory of the Communications Research Centre, Department of Communications (Canada) and is located near Ottawa, Canada. The ATEL was developed to provide the special enviroment and facilities needed to conduct video subjective assessments of television systems under the rigorously controlled conditions needed to ensure valid and repeatable results.

The video subjective assessments called for by the Advisory are to be carried out at the ATEL. The ATEL's activities in this regard are supported by a consortium of interests from government and industry in Canada. The members of this consortium currently consist of the Canadian Broadcasting Corporation, The Communications Research Centre (Canada), the Department of Communications (Canada), Leitch Video International (Canada) , Rogers Engineering (Canada), Tektronix (Canada), and Telesat Canada.

At present, the ATEL is well along in its fit-up exercises, with facility and methods prove-ins scheduled to begin February 1991 and tests of terrestrial ATV systems scheduled to begin in May 1991.

4. Test Schedule

Objective and Subjective Laboratory tests of the proposed ATV Systems are scheduled to start on April 12, 1991 and to be completed by June 2, 1992. A copy of the current Test Sequence and Calender is provided in Appendix VIII.

Field Tests of the ATV system(s) are scheduled to start upon the completion of the laboratory tests and selection by SSWP-4.

5. Issues

The following is a summary of some of the critical issues that are being considered by SSWP-2.

5.1 Test Procedures for Digital Systems

The entry of several digital systems into the Advisory Committee process presents some new challenges to SSWP-2. Modifications to existing test procedures and some new test procedures specifically for digital ATV systems have been proposed by several organizations (Appendix IX SSWP2-0638, SSWP2-0623 and SSWP2-0646). In addition, two new attributes which relate primarily to digital systems have been developed by the Planning Subcommittee. SSWP-2 has outlined new tests for these attributes and will modify the appropriate test procedure documents as necessary. SSWP-2 will work with the test centers to determine if these new test procedures can be carried out in an effective manner. The Working Party may need to eliminate other test procedures which are no longer considered essential.

5.2 Audio Subjective Testing

The Audio Subjective Test Procedures describe two types of tests; quality and transmission impairment. The Advanced Television Test Center (ATTC) has agreed to conduct the transmission impairment tests and to prepare the tapes required to conduct the quality tests. At this time, no organization has been identified to conduct the subjective audio quality tests. However, the ATTC has indicated an interest, and is considering the possibility of conducting the tests. SSWP-2 will continue work with the Advisory Committee leadership to obtain the resources necessary to conduct these tests.

5.3 System Specific Tests

The Test Management Plan calls for System Specific Tests: "These tests shall be based upon analysis of the system by SSWP-1, which if appropriate, will identify specific areas of concern not addressed by the test plan. SSWP-2 will produce detailed test procedures to evaluate each identified area of concern." A new Task Force on System Specific Testing has been formed to expedite development of these test procedures. The Task Force will be chaired by John Watson (Group W).

5.4 Laboratory Management Plans

The Test Management Plan requires that the test facilities submit proposals in the form of Test Management Plans. While at this point in time, these documents will certainly not be considered "proposals", it is important that the laboratories file their internal test management plans with SSWP-2. These documents should include descriptions of the technical and support staff; test and measurement equipment; facilities for proponents equipment (space, power and air conditioning, security, fire control etc.). The document should also describe terms and conditions, system monitoring to avoid intentional and unintentional changes, and laboratory handling and protection of data.

5.5 Field Tests

5.5.1 Procedure Modifications

The Field Test Procedures document is likely to require modifications as we learn more about the proposed ATV systems and move forward in the Advisory Committee process. In addition, SSWP-2 received some suggestions about potential modifications to the field test procedures after the announced deadline for comments. These comments will be reviewed and the procedures will be modified as required.

5.5.2 Resources

Utilizing the approved procedures manual as a foundation, SSWP-2 has started to plan the field tests. The Field Test Task Force has met with ATV system proponents and broadcast equipment manufacturers with the goal of establishing minimum specifications to be used to develop common transmission equipment. Many of the broadcast equipment manufacturers have indicated that they are interested in providing equipment and support for the field tests.

Chairman Wiley has indicated that the ATV system proponents must be prepared to supply a substantial portion of the required resources necessary to conduct the field tests. The proponents have been asked to formulate and present a plan as to how they would support the field test effort.

5.5.3 Generic Digital Field Tests

SSWP-2 has investigated the possibility of conducting "generic" testing of digital transmission for the purposes of channel characterization. It was thought that these tests might be practical if a majority of the proposed digital systems utilized similar channel modulation methods. However, the digital system proponents have indicated that they do not feel that these tests will be meaningful because it would be difficult to predict the performance of a complete digital ATV transmission system since source encoding, channel encoding and channel equalization are interelated. Appendix X. of this report includes two letters on this subject.

SSWP2-0124
REV 25 SEP 90

ATV Test Procedures

Test Management Plan

Page

1. OVERVIEW

1.1. Purpose of This Document. 1-1

1.2. Changes to This Document. 1-1

1.3. Introduction 1-1

2. PROPONENTS, SYSTEMS

2.1. Determining Which Systems Are Tested 2-1

2.2. Scheduling Systems for Test 2-1

2.3. What Is To Be Supplied by the Proponent 2-2

2.3.1. For the Selection Process 2-2
2.3.2. For System Testing, the Proponent Will Provide 2-2

2.3.2.1. A System Which Meets the Description Below: 2-2
2.3.2.2. System Documentation 2-2
2.3.2.3. Staff 2-3

2.4. Scheduling Systems for Subjective and Field Tests 2-3

2.5. Scheduling Field Tests 2-3

3. TEST FACILITIES

3.1. Identifying Possible Test Facilities 3-1

3.2. Facility Proposals 3-1

3.3. Laboratory Test Management Plan 3-2

3.4. Bonds and Fees for Testing 3-2

3.5. Development of Test Procedures 3-2

3.6. Eligibility to Conduct Tests 3-2

3.7. Access by Committee Members 3-3

3.8. Provisions for ABSOC Representatives 3-3

4. TESTING

4.1. Test Documents 4-1

4.2. Test Procedure Development and Modification. 4-2