4. CHROMATICITY/COLORIMETRY CHARACTERISTICS

4.1. Introduction

The procedures in this section exercise the Red, Green, and Blue inputs of the system under test, to explore the dynamic range over which the chrominance channels are linear. In addition, for those systems that are "NTSC compatible," (i.e., Enhanced-NTSC systems) the procedures determine whether standard NTSC color-difference signals are present at the output of a reference-quality NTSC demodulator.

In conjunction with these tests, information is required from the proponent as to the degree of NTSC compatibility that is claimed.

4.2. Test and Measuring Equipment

4.2.1. Signal Sources

Two different signals are required for the procedures that follow.

The first signal is RGB color bars of 75-percent amplitude (525 mV) and zero setup. In CCIR nomenclature, these are 75/0/75/0 bars.

The other signal is a line-rate ramp that increases linearly in amplitude, from the 0-mV black level to the 700-mV white level, during the period from 10 percent to 90 percent of the active line time. The waveform is specified in Figure 4-1.

Three matched attenuators, having settings of 0 dB and 1 dB, are required for the test with color bars.

A calibrated wideband attenuator, having integer and 0.1-dB steps, may be required for the dynamic range test.

4.2.2. Monitoring

For the NTSC-compatibility test, a professional, reference-quality NTSC demodulator, an NTSC waveform monitor, and an NTSC vectorscope are required. Use of a video measurement set that integrates the waveform monitor and vectorscope functions, provides automatic measurement of amplitude and phase, and generates a hard-copy output, is recommended.

For the dynamic range test, an ATV waveform monitor is required. A differentiating filter, having a time constant of approximately one microsecond, should be available for insertion ahead of the monitor input. A specification for a suitable filter is provided in Figure 4-2.

4.3. Procedures

4.3.1. Color Difference Compatibility

4.3.1.1. Setup

Connect the Red, Green, and Blue outputs of the color-bar generator, through the the three matched attenuators, to the respective inputs of the

Enhanced-NTSC system under test. Use equal lengths of identical coaxial cable into 75-ohm terminations at the encoder input.

Connect the output of the reference NTSC demodulator to the NTSC waveform monitor and vectorscope. Terminate all cables in 75 ohms.

4.3.1.2. Measurement Technique

Set the attenuators to the 0-dB position.

Adjust the gain and phase controls of the vectorscope to center the Green dot in the appropriate box of the graticule. Note the phase and amplitude of each of the other vectors on the vectorscope display.

Set the attenuators to the 1-dB position.

Increase the gain of the vectorscope to return the Green vector dot to the original position.

Measure any differences, in amplitude or phase, between the dot positions now displayed and the original positions.

4.3.1.3. Presentation of Data

For each attenuator setting, photograph the waveform monitor, showing a line-rate display, and the vectorscope, with the Green dot positioned in the box.

Optionally, make a 15-second recording on the NTSC DVTR at each attenuator setting. Note the SMPTE time code at the start of each recording.

4.3.2. Chrominance Component Dynamic Range

4.3.2.1. Setup

Connect the Red, Green, and Blue outputs of the test signal generator to the respective inputs of the SUT. Use a wideband video distribution amplifier driving equal lengths of identical coaxial cable into 75-ohm terminations at the encoder input.

The procedure below must be performed three times, once each for the Red output, Green output, and Blue output. For each iteration, connect the appropriate output of the SUT to the ATV waveform monitor and terminate the cable in 75 ohms.

4.3.2.2. Measurement Technique

Examine each of the three ATV outputs, in turn, on the waveform monitor. Nonlinearity of the transfer characteristic is evidenced by distortion of the ramp signal. Nonlinearity near the peak amplitude of the ramp is indicated by compression or, in the extreme case, clipping of the ramp. Nonlinearity near black is evidenced by curvature of the ramp, or a delay in the start-up of the ramp from black, or both.

A small amount of nonlinearity is more easily discernible if the differentiating filter is placed in line with the waveform monitor input.

If any nonlinearity is observed, on any output, place the calibrated wideband attenuator in line with the corresponding input of the SUT. Increase the amount of attenuation until there is no discernible nonlinearity on the ATV output. Note the attenuation required to achieve this condition.

4.3.2.3. Presentation of Data

Photograph the waveform monitor display of any output that shows nonlinearity. Record the attenuation required to reduce the nonlinearity below an observable level.

Optionally, make a 15-second recording on the HD DVTR, both before and after any attenuation to correct nonlinearity. Note the SMPTE time code at the start of the recording(s).

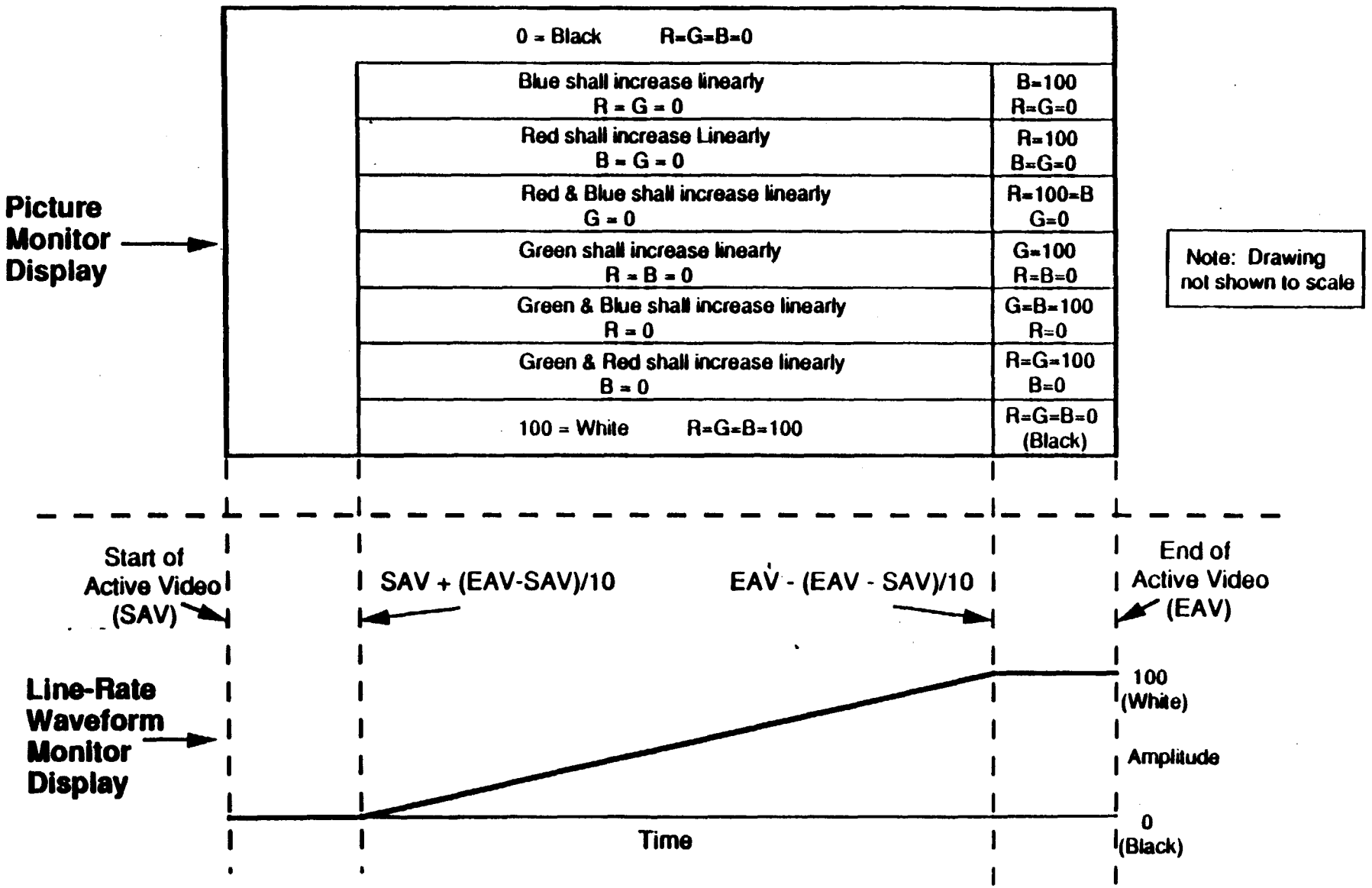

Figure 4-1 - Line-Rate Ramp Test Signal

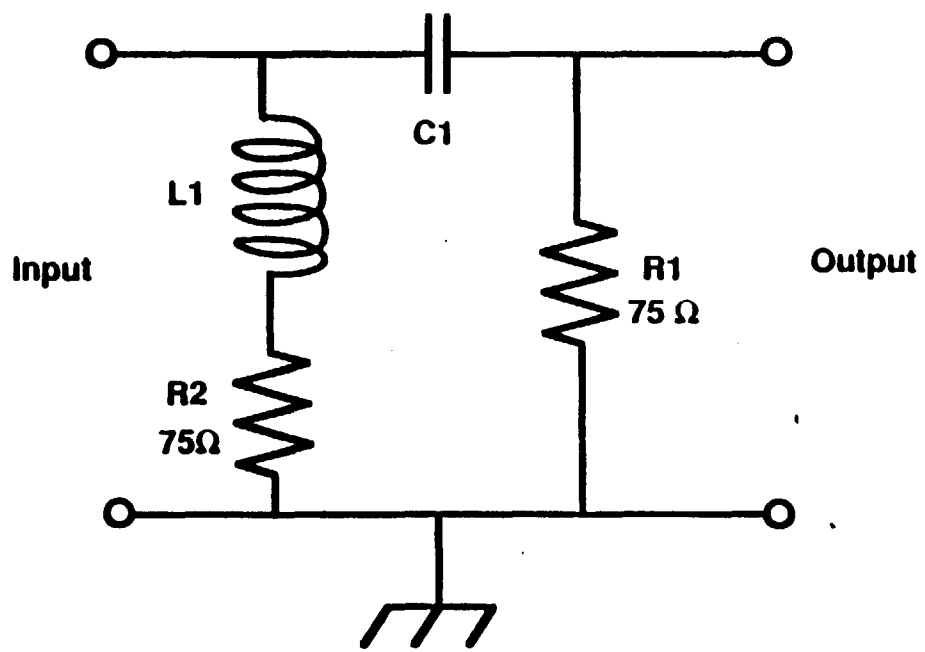

R1C1 = 1 μs
L1/R2 = 1 μs
C1 = 0.015 μF
L2 = 75 μH

Note: Component values subject to experimental verification.

Figure 4-2 - Specifications for Differentiating Filter

5. VCR COMPATIBILITY FOR ENHANCED NTSC

5.1. Introduction

The purpose of this test is to ensure that Enhanced NTSC ATV systems may be recorded on NTSC video cassette recorders and played back as NTSC.

5.2. General Description of Method

The VCR's are divided into two groups, A & B. Group A is used to record and play back the NTSC reference, and Group B is used to record and play back the NTSC compatible ATV signal. The results of the two recordings are compared and documented by expert observers. Video and audio comparisons are made using A/B switching into a single NTSC receiver.

5.3. Test and Measuring Equipment

Obtain 2 new identical units of each of the following types of NTSC VCRs:

VHS without HQ
Super VHS
8 mm
8 mm Hi-band

All VCRs should be certified by their manufacturers to be operating within normal specs.

The VCRs are divided into two groups, A and B. One VCR of each type is in group A, and one is in group B.

A large screen direct view NTSC receiver with an 8 X 1 RF input switcher is also required.

5.4. Procedure

5.4.1. Setup

With the aid of expert observers, verify that both recorders of the same model perform substantially the same when NTSC material is recorded on and played back on them.

5.4.2. Measurement Technique

Make an NTSC reference tape of the test material for each of the Group A recorders at an RF input level of -35 dBm (5 mV into 75 ohms). The length of the recording shall not exceed five minutes.

Using identical test material in the NTSC-compatible ATV format, record the corresponding NTSC-compatible signal on all four recorders in Group B at a nominal RF input level of -35 dBm (5 mV into 75 ohms). The length of the recording shall not exceed five minutes.

All recordings, of both video and audio, will be made via the RF input of the VCRs tuned to Channel 12. Audio shall be recorded on all tracks available in the VCR. (e.g. Hi-Fi, 8 mm digital audio, and longitudinal track). Playback shall be via Channel 3 [RF] into an 8 x 1 switcher feeding a single NTSC receiver.

The panel of expert observers compare the recordings made by the Group A and B VCRs when played back through the single NTSC receiver. The observers shall note and document any observed differences which cannot be attributed to nominal differences in the VCRs. Both audio and video differences shall be noted. Audio shall be compared in all audio modes available on the VCRs and the NTSC receiver.

Comparisons will be made on both stills and motion materials. Test material used for comparisons will be sequences developed for subjective testing. Audio shall be included as part of the test sequences.

5.4.3. Presentation of Data

Written commentary noting any differences between the Enhanced NTSC and the NTSC recordings shall be made by the expert observers.

6. TRANSMITTED SIGNAL SPECTRUM

6.1. Introduction

Refer to the Functional Diagram for the testing laboratory facility, Figure 6-1. The output of each proponent-provided ATV modulator occupies an IF band nominally between 41 and 47 MHz. The signal typically occupies the full 6-MHz bandwidth. It is the responsibility of the proponent to band-pass filter each modulator output appropriately to ensure compatibility with FCC requirements for radiated signals.

The procedure described below measures the spectrum of the IF signal provided to the RF Test Bed by a proponent system.

6.1.1. Definition

Transmitted Signal Spectrum, in the context of this testing, is the frequency spectrum of the signal supplied by the proponent to the RF Test Bed of the testing facility. This signal includes all video, audio, and data carriers, as well as any "helper" signals used to convey enhancement information. When up-converted to a terrestrial broadcast channel, the signal will have a spectrum identical to that applied to the antenna of a terrestrial television broadcast facility operating on that channel.

6.1.2. General Description of Method

All carriers are modulated with appropriate test signals, described by the proponent, to fill the transmitted spectrum with sideband energy. The spectrum, at the output of the proponent-supplied band-pass filter, is measured and plotted. Using an appropriate power measurement method, specified by the proponent, the half-power bandwidth is determined.

6.2. Test and Measuring Equipment

A suitable test instrument for this procedure is a spectrum analyzer that covers a frequency range of 41 MHz to 47 MHz.

6.3. Procedure

6.3.1. Setup

The proponent shall have described an appropriate test signal to maximize the energy and bandwidth of the transmitted signal. Select such a signal as the input to the proponent-furnished encoder.

As a default test signal, select a matrix test pattern, or "multi-pattern," as the video signal input to the encoder. This test pattern incorporates a variety of standard luminance and color test signals, such as crosshatch, checkerboard, multiburst, and color bars. It occupies the full image area, including the side panels. This pattern may be made dynamic, to maximize energy and bandwidth for motion-adaptive systems, by gating it on and off at one-frame intervals with the active video gate as described in Section 2.2.1.2.

Apply pseudo-random digital data to all digital audio and ancillary data inputs.

Connect the IF output of the proponent system to the spectrum analyzer. Take care to match the input impedance of the spectrum analyzer, which may be 50 ohms, to the 75-ohm output impedance of the proponent system.

6.3.2. Measurement Technique

With all carriers excited as specified above, display the spectrum of the IF signal on the spectrum analyzer. Using the power measurement method specified by the proponent as appropriate for the system under test, note the half-power (3-dB) bandwidth of the signal.

This procedure may be repeated randomly, during the testing period for each proponent, as a means of detecting any changes in the performance of the system under test. (See Section 2, System Performance Verification.)

6.3.3. Presentation of Data

For each channel, photograph the spectrum analyzer display or obtain a hard-copy output from a printer or plotter, if the instrumentation provides this capability.

Advanced Television Test Center

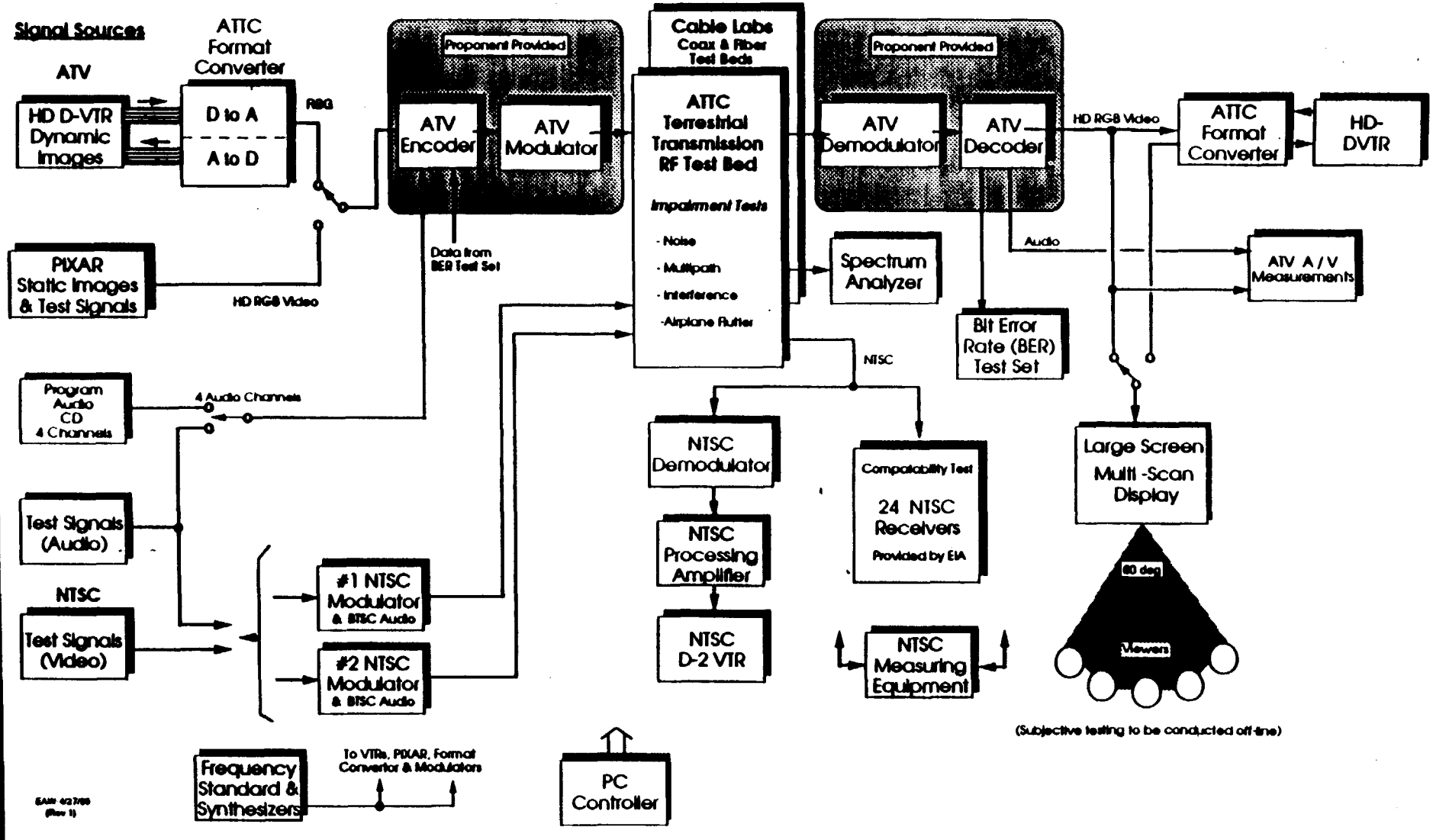

Figure 6-1 - Functional Block Diagram

DEGRADATION OF BTSC AUDIO AND ANCILLARY VBI SERVICES

7.1. Degradation of BTSC Audio

This test documents the degradation to the BTSC multichannel audio system of the existing NTSC service in the presence of ATV signals on co-channel, upper adjacent channel, representative linear taboo channel and representative non-linear taboo channel.

Up to 24 NTSC receivers are used for testing interference to NTSC video. A sub-set of these receivers are equipped with BTSC audio. A representative sample of 6 to 10 of these BTSC receivers are employed in this test procedure.

The test described in this section employs objective test procedures and produces a record for evaluation after the testing has been completed. The ultimate use of the data is to determine the levels at which the BTSC audio is degraded by an interfering ATV signal compared to the levels which cause significant degradation to the NTSC picture.

7.1.1 Introduction

The purpose of this test is to measure the extent to which the received BTSC signal is degraded by the presence of an ATV signal. Degradation caused by interference from another RF signal is likely to produce extraneous signals and noise which can readily be measured by automatic instrumentation, tabulated and plotted.

7.1.1.1 Definitions

7.1.1.1.1 BTSC Audio

BTSC is the multichannel television sound system adopted by the Broadcast Television Systems Committee of the EIA for use with the existing NTSC television system. BTSC audio provides two-channel stereo, a separate audio program (SAP) channel and a professional-use (PRO) voice/data channel. It is compatible with monophonic NTSC television receivers. EIA conducted extensive compatibility tests prior to industry adoption of the system.

7.1.1.1.2 Degradation to BTSC Audio

Degradation to BTSC audio is defined here as a significant increase (more than 3 dB) in extraneous signals or noise at the audio output of a consumer NTSC television receiver equipped for BTSC audio.

7.1.1.2 General Description of Method

The method for measuring the degradation to the BTSC audio involves three steps: 1) measuring and recording the weighted noise power level that occurs at the audio output of each BTSC equipped receiver under test, in the presence of interference from the undesired ATV signal; 2) producing a graph of the spectral energy distribution of the unweighted audio output of a representative affected BTSC receiver at certain levels of interference; and 3) conducting a measurement of channel separation

on the same selected receiver and under the same interference conditions used in Step 2.

The BTSC audio system contains a companding system in the L-R matrixed signal path which must be forced open during the test. This is done by applying an 8 kHz tone on the left channel only, in order to generate a large L-R signal. It is not desirable to have the tone and its harmonics appear in the measured energy at the receiver output. Thus, the frequency of the test tone is selected for its harmonics to be above the 15 kHz passband of the receiver audio channel. The fundamental 8 kHz tone is nulled out by employing the THD+N measurement technique as described in Section 11.1. The THD+N (distortion and noise) is measured on the modulated (left) channel.

Six to 10 BTSC equipped NTSC receivers will be tested. The left audio output of each receiver will be fed in turn to the audio analyzer. The test will be conducted with 2 Desired (D) levels for co-channel, and 3 D levels each for the upper adjacent, representative linear taboo and representative non-linear taboo channels. The Desired levels for the NTSC signals will be those used in the video interference tests. The Undesired levels for the ATV signal will be the same as those selected for the video subjective rating tests.

7.1.2 Test and Measuring Equipment

An audio generator and analyzer capable of THD+N measurements will be used to produce the 8 kHz sinusoidal tone, perform the measurement, and provide output for tabulation and graphs. The analyzer will be operated in the THD+N mode. A low-pass filter with at least 40 dB attenuation at 15.734 kHz and above will be combined with a standard CCIR Recommendation 468-4 audio weighting network for the measurement. The audio weighting network will be switched out when making spectral distribution graphs.

The Desired video and audio signals will be obtained from a suitable NTSC signal generator capable of producing a matrix test signal, and a standard BTSC encoder. The SAP channel will be modulated with program material. The Undesired video and audio test signals will be the same as those used for the video interference tests.

7.1.3 Procedure

7.1.3.1 Setup

The tests will be conducted using the interference cases of co-channel, upper adjacent channel, a representative linear taboo channel, and a representative non-linear taboo channel. The RF signal levels and the taboo channels will be the ones selected for the video subjective rating tests. The ratio of visual to aural carrier is set to 10 dB peak visual to rms aural.

The RF Test Bed will be set to provide the appropriate Desired (D) NTSC and Undesired (U) ATV signal levels.

For the THD+N measurement the audio modulation for the BTSC signal will consist of an 8 kHz sinusoidal tone on the left channel. The level of the tone is 6 dB below the level that modulates the aural carrier to 12.5 kHz peak deviation with the stereo and SAP subcarriers turned off. The right channel will be unmodulated and terminated in 600 ohms.

For the channel separation measurement the audio modulation for the BTSC signal will consist of a 1 kHz sinusoidal tone on both left and right channels. After a calibration measurement the tone is removed from the right channel for the separation measurement.

For both THD+N and separation tests, the SAP subcarrier is modulated with program material to a peak deviation of 10 kHz. The SAP subcarrier is adjusted to modulate the main aural carrier to a peak deviation of 15 kHz. The PRO channel is not activated. The combined modulation of the aural carrier shall not exceed 70 kHz peak deviation. Audio modulation for the ATV signal will be representative of normal program material.

The output of each of the selected BTSC receivers will be fed, in turn, to the audio analyzer with the low-pass and CCIR weighting filters switched in and out as each measurement requires.

7.1.3.2 Measurement Technique

Make a calibration run for each D level, with no ATV interference present, on each BTSC receiver to be tested. 1) Measure, and record in dBm, the THD+N from the left audio channel output; 2) make a spectral distribution graph of the left audio output; and 3) make a channel separation measurement with the frequency of the encoder input signal changed from 8 kHz to 1 kHz, the analyzer operating in the crosstalk measurement mode, and both left and right audio outputs of each receiver measured.

For each test run, measure the THD+N at the left audio channel output of each BTSC receiver to be tested, with the CCIR and low-pass filters in the analyzer switched in. Record the measurement in dBm for each combination of Desired NTSC and Undesired ATV RF signal levels.

For each combination of D and U levels, 1) record the measured THD+N from each receiver, and 2) calculate and record the difference between the measured calibration THD+N and the THD+N measured with the ATV interference present. If the difference is more than 3 dB on half or more of the receivers, plot a spectral distribution graph and make a channel separation measurement.

Make a spectral distribution graph from the left audio channel output of the representative BTSC receiver via the audio analyzer. Use the same THD+N test conditions as in 7.1.3.1, above, but with the CCIR audio weighting filter switched out and the low-pass filter switched in. The representative receiver is the one from which the measured THD+N level is the median of the group of receivers that measured 3 dB or more above the calibration THD+N level.

Make the separation measurement by 1) switching the BTSC encoder input audio signal from 8 kHz to 1 kHz, 2) switching the audio analyzer to the crosstalk measurement mode, and 3) switching out the CCIR filter but leaving the low-pass filter in the circuit. Measure the left and right audio channel outputs of the representative BTSC receiver and record the separation results in dB.

7.1.3.3 Presentation of Data

The results of the THD+N test are presented in the form of tables and graphs. The tables contain, for each receiver and for each combination of D and U levels, the calibration THD+N level in dBm, the measured test THD+N level in dBm, and the calculated difference in dB between the calibration and test measurements. The results of the separation measurements, in dB, are also shown in the tables.

The spectral distribution graphs show the baseband audio frequency spectrum from 20 Hz to 15 kHz on the x-axis and the unweighted, but band-limited, output from the left audio channel of the receiver under test in dBm on the y-axis.

7.2. Degradation of Ancillary VBI Services

7.2.1. Introduction

The purpose of these procedures is to confirm the usability of the vertical blanking interval (VBI) of NTSC and Enhanced-NTSC ATV signals in a mixed NTSC/ATV transmission environment. Two lines will be tested, Line 12 and Line 21. For the case of NTSC as the Desired signal, the VBI lines will be tested in the presence of co-channel interference from an Undesired ATV signal. For the case of Enhanced-NTSC as the Desired signal, the VBI lines will be tested in the absence of any transmission impairment.

7.2.1.1. Definition of Test

This test measures degradation of the VBI lines by examining two representative lines, Line 12 and Line 21, of an NTSC or Enhanced-NTSC signal for noise and inappropriate spectral components.

7.2.1.2. General Description of Method

While an NTSC signal is being subjected to co-channel ATV interference, the rms noise on each of two VBI lines is measured and spectral plots are made of the energy present on those lines. No ancillary

When an Enhanced-NTSC system is being tested, each of two VBI lines of the Enhanced-NTSC signal will be measured, and spectral plots made of the energy present on those lines, in the absence of transmission impairments. No ancillary signal is present during the measurement.

7.2.2. Test and Measuring Equipment

An instrument capable of measuring rms noise on a single NTSC television line is required. Additionally, a means of making a spectral plot of a single NTSC

television line is required. Use of an automated video measurement instrument that features digital waveform storage and hard-copy output will simplify these procedures. A precision NTSC demodulator is also required.

7.2.3. Procedure

Make certain that there is no video on either of the lines of the NTSC signal being measured. Set up the RF apparatus to generate co-channel, ATV-into-NTSC interference.

When testing an Enhanced-NTSC system, also measure the VBI of the ATV signal with no impairment present.

7.2.3.1. Setup

Modulate the Desired video and audio carriers and the Undesired ATV signal with the same signals used for video interference testing, as specified in Section 19.5.3.

To establish a reference condition, first set the Undesired ATV signal to the level of maximum attenuation. Then, set the U level, in turn, to each of the six levels selected by the expert panel for use in the video subjective rating tests.

7.2.3.2. Measurement Technique

Measure the rms noise on Line 12 and Line 21 of the NTSC signal via the precision NTSC demodulator. Make a spectral plot of the signal components on Line 12 and Line 21 of the NTSC signal via the precision NTSC demodulator.

Repeat this procedure for each of the U levels selected for the video subjective rating tests for co-channel interference at the -55 dBm level for the Desired signal.

For Enhanced-NTSC systems only, also measure the rms noise on Lines 12 and 21 of the Enhanced-NTSC signal via the precision NTSC demodulator. Make a spectral plot of the signal components on Line 12 and Line 21 of the Enhanced-NTSC signal, via the precision NTSC demodulator.

7.2.3.3. Presentation of Data

Record the rms noise and make a spectral plot for each U level.

8. OBJECTIVE AUDIO TESTS-GENERAL CONSIDERATIONS

This document describes the test procedures to be used for the testing of audio channels that accompany an Advanced Television System. Except where tests are made to ascertain the NTSC compatibility of an Enhanced NTSC system, this document assumes that all audio program channels are digital.

8.1. Security System

If an audio system is provided with a security system, the security system shall be operational, *i.e.*, transmission encrypted and the receiver authorized for reception.

8.2. Matrix Systems

Those portions of systems using matrixing shall not be tested. Only discrete transmission channels shall be tested.

8.3. Audio Levels

As a low-Z sending, high-Z receiving interface is used for testing, all audio levels shall be measured in rms voltage or by a dB level referenced to Nominal Test Level [dBNTL] of 0.7746 volts rms. [0.7746 volts is the rms voltage across a 600 ohm resistor dissipating 1 mW.]

The maximum sending and receiving audio levels shall be +14 dBNTL at 400 hertz.

8.4. Loading of Unused Channels

Unless specified otherwise all audio channels not involved in a test shall be loaded with pink noise at a level of 0 dBNTL. The pink noise on each channel shall be independently generated.

8.5. Systems with Reconfigurable Channels

Those systems which have the capability to reconfigure their audio channels, *e.g.*, two high-quality channels which can be reconfigured into four medium quality channels, shall be tested in the configuration which the Proponent designates as the one he feels will be the principal mode of use of his system.

9. ENHANCED NTSC AUDIO SIGNAL-TO-NOISE RATIO

9.1. Introduction-SNR

These procedures determines the audio signal-to-noise ratio by taking the difference, in dB, between the output noise level of an unmodulated channel and the reference audio output level. This test is only made on the analog channels of Enhanced NTSC systems.

9.1.1. Definition-SNR

Signal-to-noise ratio is the numerical ratio between the sine-wave standard output level [in this case +4 dbNTL] and the rms noise level with zero applied signal. The rms noise power is measured over a specified bandwidth at the output of the system under test, which is terminated. The power ratio is expressed in decibels (dB).

UnWeighted Signal-to-Noise is measured with a flat frequency response over the system bandwidth.

Weighted Signal-to-Noise is measured with a special network which amplifies or attenuates the noise depending on the ear's sensitivity at that frequency.

Wideband Noise Spectrum is measured with a spectrum analyzer and consists of a spectrum plot of all components found from 20 hz to 80 kHz found at the broadband audio output of a precision NTSC demodulator.

9.1.2. General Description of Method-UnWeighted SNR

The reference level for the measurement is established using a 1000-Hz tone at +4 dBNTL. The gain of the proponent's apparatus is set such that a +4 dBNTL output level is achieved with a +4 dBNTL input level. Then the input signal is removed and replaced with a 600-ohm termination. The rms noise power, over the proponent-specified bandwidth of the channel, is measured at the output, which is terminated in 600 ohms. The difference between +4 dbNTL and the rms noise power is the unweighted signal-to-noise ratio.

Additionally, the spectral characteristic of the noise is plotted so that any periodic components can be identified.

This measurement is repeated on each individual audio channel in the system. Channels not under test are terminated.

9.1.3. General Description of Method-Weighted SNR

The reference level for the measurement is established using a 1000-Hz tone at +4 dBNTL. The gain of the proponent's apparatus is set such that a +4 dBNTL output level is achieved with a +4 dBNTL input level. Then the input signal is removed and replaced with a 600-ohm termination. The noise power, over the proponent-specified bandwidth of the channel, is measured at the output through the weighting network whose impedance is 600 ohms. The difference between +4 dBNTL and

the rms noise power through the weighting network is the weighted signal-to-noise ratio.

This measurement is repeated on each individual audio channel in the system. Channels not under test are terminated.

9.1.4. General Description of Method-Wideband Noise Spectrum

A spectrum analyzer capable of operation over the range 20 hz to 80 khz is attached to the broadband audio output of a precision NTSC demodulator. The video carrier is modulated with 75% color bars. The spectral content is plotted or photographed.

9.2. Test and Measuring Equipment-SNR

A sine-wave audio generator, an rms audio voltmeter, a low-pass filter whose noise bandwidth is equal to the claimed bandwidth of the proponent's system, various 600 ohm terminations, a precision NTSC demodulator with BTSC and SAP outputs, a spectrum analyzer, and a CCIR Rec 468-4 audio weighting network are used for this test.

9.3. Procedure-SNR

Terminate all video inputs in 75 ohms, and continue to provide H and V drive to the proponent's encoder. Load any ancillary data inputs with PN sequences.

Terminate all unused audio channels in 600 ohms.

Perform the following procedure for each audio channel:

9.3.1. Setup-SNR

Apply a 1000 Hz tone at +4 dBNTL from the signal generator to the input of the channel being tested. Connect the audio rms voltmeter to the output of that channel from the precision NTSC demodulator. Select an appropriate filter to limit the bandwidth of the measurement to that specified by the proponent for the channel under test. Adjust the gain of the audio channel to obtain a +4 dBNTL output level.

9.3.2. Measurement Technique-SNR

Measure the quiet channel noise level by disconnecting the tone generator and terminating the input in 600 ohms. Repeat the measurement with the CCIR 468-4 weighting network at the input to the rms voltmeter.

Read the noise power levels (unweighted and weighted) in dBNTL, and graph the spectral distribution of the unweighted noise.

Attach the spectrum analyzer to the broadband audio output of the precision NTSC demodulator. Set the video modulation to 75% color bars. Set the analyzer to sweep from 20 hz to 80 kHz.

9.3.3. Presentation of Data-SNR

Record the unweighted and weighted signal-to-noise ratio, referenced to the +4 dBNTL output level for each channel.

Also obtain hard copies of the unweighted noise spectrum graph for each channel.

Record the spectrum of the demodulated broadband audio.

10. DYNAMIC RANGE

10.1. Introduction-DR

This procedure measures the dynamic range of an audio channel by means of a low-amplitude sinewave.

10.1.1. Definition-DR

Dynamic Range is the ratio in dB between the maximum output level of a system and the rms sum of distortion products and noise in the output revealed in the presence of a very low level tone, where the signal power of the fundamental of the low level tone is excluded.

10.1.2. General Description of Method-DR

Dynamic range is measured by applying a 1 kHz tone at 70 dB below maximum operating level [-56 dBNTL] to the input of the system under test. At the output of the system under test the 1 kHz fundamental tone is notched out. The remaining noise and distortion products are read with an rms voltmeter through a low-pass filter whose noise bandwidth is equal to the audio bandwidth of the system under test. This method is equivalent to a THD+N measurement made with a low amplitude sine wave.

The dynamic range is computed by subtracting the remnant noise and distortion power from the maximum output level of +14 dBNTL.

10.2. Test and Measuring Equipment-DR

An analyzer similar to one used for THD+N measurements is required. The analyzer must be capable of making accurate measurements at the low amplitude of -56 dBNTL used for the 1 kHz tone. (Alternately an audio amplifier whose noise and distortion products are sufficiently low as not to affect the results may be connected between the system under test output and the analyzer input.) The THD+N analyzer must have a low-pass filter equal to the high frequency cutoff of the proponent's system.

10.3. Procedure-DR

Terminate all video inputs in 75 ohms and continue to supply H and V drive to the proponent's apparatus. Load all ancillary data channels with PN sequences.

Perform the following for each audio channel:

10.3.1. Setup-DR

Apply a 1 kHz tone at -56 dBNTL to the input of the channel under test. Connect the analyzer to the output of the channel under test. Set the audio channel gain(s) for an overall gain of 0 dB.

Verify the presence of the low-level 1 kHz tone in the output of the channel. If no 1 khz tone is detected, increase the sending level of the 1 khz until the 1 kHz appears in the channel output. Note the new sending level, append it to the test data.

10.3.2. Measurement Technique-DR

Set the analyzer for the THD+N mode of operation. Set the notch frequency to 1 kHz. Read the THD+N, add -70 dB to the value obtained, and discard the sign. [*e.g.*, For a THD+N reading of -22 dB, add -70 dB for a total corrected reading of -92 dB and then discard the sign for a dynamic range of 92 dB.]

10.3.3. Presentation of Data-DR

For each audio channel, list the dynamic range.

11. ATV AUDIO NONLINEAR DISTORTION

These procedures below measure four forms of nonlinear distortion -- total harmonic distortion (THD), total harmonic distortion plus noise (THD+N), intermodulation distortion (IMD), and dynamic intermodulation (DIM).

11.1. Total Harmonic Distortion-THD(+N)

11.1.1. Definitions-THD(+N)

Total Harmonic Distortion (THD) is the RSS value of the output rms harmonic voltages including, if within the band from 20 Hz to 20 kHz, at least the second through the fifth harmonics of a input single frequency sine wave. THD is expressed as a percentage of the fundamental single frequency sine wave voltage.

Total Harmonic Distortion + Noise (THD+N) is similar to THD. This parameter measures not only the harmonics but also any noise within the 20 Hz to 20 Khz band. THD+N is evaluated by nulling out the input fundamental frequency at the output of the system and measuring the remaining energy. [If a frequency sweep is applied to the input, and the null frequency of the analyzer can automatically track the generator frequency, then a plot of THD + N versus frequency may be obtained.]

11.1.1.1. General Description of Method-THD

Test frequencies of 50, 100, and 400 Hz, and 1, 2, 4, and 8 kHz, are applied sequentially to the system under test. The amplitudes of second through fifth harmonics up to 20 kHz are measured individually. The THD is calculated by the formula:

$$THD = 100/E_f \times \sqrt{E2^2+E3^2+E4^2+E5^2}$$

E_f = RMS value of fundamental voltage
E2 = RMS value of second harmonic voltage
E3 = RMS value of third harmonic voltage
E4 = RMS value of fourth harmonic voltage
E5 = RMS value of fifth harmonic voltage

This procedure is performed at multiple input signal levels.

11.1.1.2. General Description of Method-THD+N

Test tones are applied to the input of the audio channel under test. An audio analyzer, connected to the output of the channel, is set up to reject the fundamental frequency of the input tone. The remaining output signal, measured over a 20-Hz to 20-kHz band bandwidth and expressed as a ratio of the reference signal level, is the THD + N for each input frequency.

This procedure is performed at each of multiple input signal levels, +4 dBNTL, -10 dBNTL, -25 dBNTL, -35 dBNTL, and -45 dBNTL.

11.1.2. Test and Measuring Equipment-THD+N

The maximum distortion of the signal generator shall be not more than 0.01 percent. The rated accuracy of the analyzer shall include any distortion in the equipment.

11.1.3. Procedure-THD+N

Terminate all video inputs in 75 ohms and continue to supply H and V drive to the proponent's apparatus. Load all ancillary data channels with PN sequences.

Perform the following procedure for each audio channel:

11.1.3.1. Setup-THD+N

Apply either a 20-Hz to 20-kHz sweep at +4 dBNTL or a number of discrete CW tones over the range 20 Hz to 20 kHz from the signal generator to the input of the channel being tested. Connect the audio signal analyzer to the output of that channel. Adjust the gain of the audio channel to unity.

11.1.3.2. Measurement Technique-THD+N

Use the THD + N measurement mode of the signal analyzer and automatic tuning to track the instantaneous frequency of the sweep generator.

Repeat the measurement at input levels of -10 dBNTL, -25 dBNTL, -35 dBNTL, and -45 dBNTL.

11.1.3.3. Presentation of Data-THD+N

For each audio channel, each of the two input levels, and each of the four test conditions, obtain a graph of THD + N, expressed as a percentage of the output fundamental signal level, versus frequency.

11.1.4. Test and Measuring Equipment-THD

The maximum distortion of the signal generator shall be not more than 0.01 percent. The rated accuracy of the analyzer shall include any distortion in the equipment. The analyzer may be a frequency selective voltmeter or an FFT analyzer capable of resolving each harmonic separately.

11.1.5. Procedure-THD

Terminate all video inputs in 75 ohms and continue to supply H and V drive to the proponent's apparatus. Load all ancillary data channels with PN sequences.

Perform the following procedure for each audio channel:

11.1.5.1. Setup-THD

Apply a 20-Hz to 20-kHz sweep or discrete CW tones at 20 Hz, 50 Hz, 100 Hz, 400 Hz, 1 kHz, 2 kHz, 4 kHz, and 8 kHz at +4 dBNTL from the signal generator to the input of the channel being tested. [It is possible that pre-emphasis in the audio channel may cause the channel to clip and/or distort greatly at higher frequencies.] Connect the audio signal analyzer to the output of that channel. Adjust the gain of the audio channel to unity.

11.1.5.2. Measurement Technique-THD

Test frequencies of 20, 50, 100, and 400 Hz, and 1, 2, 4, and 8 kHz or a 20 Hz to 20 kHz sweep are applied sequentially to the system under test at +4 dBNTL. The amplitudes of second through fifth harmonics up to 20 kHz are measured individually. The THD is calculated by the formula:

$$THD = 100/E_f \times \sqrt{E2^2+E3^2+E4^2+E5^2}$$

E_f = RMS value of fundamental voltage
E2 = RMS value of second harmonic voltage
E3 = RMS value of third harmonic voltage
E4 = RMS value of fourth harmonic voltage
E5 = RMS value of fifth harmonic voltage

This procedure is performed at each of two input signal levels, +4 dBNTL and -16 dBNTL.

11.1.5.3. Presentation of Data-THD

For each audio channel, at each of the two input levels, obtain a graph of THD versus frequency.

11.2. Intermodulation Distortion-IM

11.2.1. Definition-IM

Intermodulation Distortion (IMD) is characterized by amplitude modulation of a high frequency tone caused by the presence of a relatively low frequency tone. Frequency independent nonlinearities, such as non-ohmic connectors, A/D-D/A converter problems, and other simple transfer function deviations such as slew rate problems, can cause IMD.

Dynamic Intermodulation (DIM) is characterized by amplitude modulation of a high frequency sine wave caused by the presence of a relatively low frequency square wave. Symmetric and asymmetric slew rate problems can cause dynamic intermodulation.

11.2.1.1. General Description of Method-IMD

The procedure described below is based upon SMPTE Recommended Practice, RP 120-1983. The system under test is stimulated by two simultaneous test tones of 60 Hz (reference level) and 7 kHz (12 db below reference level). Measurements of the intermodulation products are taken with a frequency selective voltmeter.

11.2.1.2. General Description of Method-DIM

The procedure described below is based on a subset of IEC 268-3. The system under test is stimulated by a 3.15 kHz squarewave upon which is superimposed a 15 khz sinewave whose peak-to-peak amplitude is ¢ that of the squarewave. The DIM as measured at the output of the system under test is the RSS (root summed square) of the 750 hz and 2.4 kHz intermodulation products with respect to the RMS value of the squarewave/tone input signal.

11.2.2. Test and Measuring Equipment-IMD

A generator capable of generating the two test tones (60 hz and 7 khz) with less than 0.5% THD is required. A frequency selective voltmeter is also used.

11.2.3. Test and Measuring Equipment-DIM

An audio test set fitted with an DIM generator must be used. A true RMS audio voltmeter is also required.

11.2.4. Procedure-IMD

Terminate all video inputs in 75 ohms and continue to supply H and V drive to the proponent's apparatus. Load all ancillary data inputs with PN sequences.

Perform the following procedure for each audio channel:

11.2.4.1. Setup-IMD

Connect the dual tone generator to the input of the channel being tested. Connect the frequency selective voltmeter to the output of that channel. Adjust the gain of the audio channel to unity.

Set the audio tone generator for SMPTE IMD. Select 60 Hz as the low frequency, 7 kHz as the high frequency, and 4:1 (12 dB) as the amplitude ratio. Set the generator for a combined power output of +4 dBNTL.

11.2.4.2. Measurement Technique-IMD

Perform the SMPTE IMD measurement at input levels of -50 dBNTL, -30 dBNTL, -10 dBNTL, +4 dBNTL, and +14 dBNTL. The IMD is the number of dB the 60 Hz sidebands (7060 hz and 6940 hz) are below the 7 kHz tone.