19.5.3. Procedures

19.5.3.1. Setup

19.5.3.1.1. ATV/NTSC

The degrees to which the proponent ATV signal is robust and benign, with respect to an NTSC signal, are tested using the setup shown in Figure 19-7. Switches alter the configuration of this basic setup, to provide for calibration and to establish the three pairs of desired/undesired signals for testing, as tabulated below.

TABLE 19.1

SETUP	UNDESIRED SIGNAL	DESIRED SIGNAL
CALIBRATION	NTSC (matrix)	NTSC (flat field)
NTSC-1	NTSC (matrix)	ATV
NTSC-2	ATV	NTSC (flat field)

For the calibration setup, use as the undesired NTSC video source a matrix pattern, or "multi-pattern," that incorporates a variety of standard luminance and color test signals, such as crosshatch, checkerboard, multiburst, and color bars. Use a flat-field test signal, of 50-percent amplitude, for the desired NTSC video.

For the subsequent ATV/NTSC tests, the multi-pattern may be used as the undesired video source, and the flat field as the desired NTSC video. The FCC Advisory Committee may recommend the test pattern to be used for the undesired ATV video signal, in order to test under the condition of maximum RF power. Such a test pattern shall be chosen from the gamut available in the test facility. For example, either a moving zone-plate test pattern or a radial resolution pattern that is gated on and off rapidly would be appropriate for exciting an ATV system in which power is a function of motion. Guidelines for selecting the desired ATV video are contained in the Video Subjective Test Procedures manual.

For testing, apply pseudo-random digital data to all digital audio capacity (and ancillary data inputs).

When an NTSC signal is the undesired signal, set the aural carrier power of that signal to 20 percent of the visual carrier power. When an NTSC signal is the desired signal, set the aural carrier power of that signal to 10 percent of the visual carrier power.

The specific broadcast channels, on which the up- converters should operate, depend upon the prohibited relationship for which each procedure is designed.

19.5.3.1.2. ATV/ATV

The degrees to which the proponent ATV signal is robust and benign, with respect to another identical ATV signal, are also tested using the setup in Figure 19-7.

For all of the ATV/ATV tests, the multi-pattern may be used as both the undesired video source and the desired video source. (The undesired signal is delayed with respect to the desired one in order to observe the interference.) If another pattern has been recommended by SS/WP2 for the system under test, then the recommended pattern shall be used for testing.

For calibration and for testing, apply pseudo-random digital data to all digital audio capacity and ancillary data inputs.

19.5.3.2. Measurement Technique

Perform each of the following procedures for each of the ATV/NTSC setups and the ATV/ATV setup described above:

Approximate synthesizer frequency settings, within given broadcast channels, are specified in each procedure. The exact frequencies to be used depend upon the carrier frequencies, in the vicinity of 44 MHz, that are applied to the proponent modulators. The proponent shall specify the carrier frequencies to be used.

19.5.3.2.1. Co-Channel Interference

For this test, both the desired signal and the undesired signal occupy the same broadcast channel.

Depending on the choice of line and field/frame frequencies, co-channel interference is susceptible to substantial reduction by means of carrier frequency offset. Accordingly, each Simulcast system proponent shall specify the precise carrier frequency (to 1 Hz) at which the system is to be tested for ATV to NTSC and NTSC to ATV co-channel interference tests. The NTSC visual carrier frequency will be set at 205.250000 MHz (Ch. 12, zero offset).

Since, in any practical allotment plan, precise frequency offset may not be achievable for all station pairs, a second test of co-channel ATV to NTSC and NTSC to ATV co-channel interference tests will be conducted using expert observers with the ATV system frequency shifted 30 Hz from the frequency specified by the proponent.

For ATV to ATV co-channel tests, the proponent shall specify the precise frequency difference at which the tests are to be run for minimum interference. Based on information supplied by the proponent to the Systems Subcommittee of the FCC Advisory Committee on Advanced Television Systems, Working Party 1, as part of the certification process, will determine a second frequency

offset likely to constitute a maximum interference condition if the effects of both offsets are deemed likely to differ significantly. That frequency offset will be employed to run a second test of ATV to ATV co-channel interference to establish the level of interference to be expected when the most desirable precise frequency offset cannot be achieved in the allotment plan. If such a second ATV-ATV test is conducted it would be system specific and expert observers would be used.

Some Simulcast systems may have a peak power level during the vertical blanking interval (VBI) which is substantially higher than the peak power at other times. In such cases, the higher power during the VBI may be the dominant factor in causing interference. If the peak power during the VBI significantly exceeds the power at other times, the ATV system should be tested without vertical synchronization of the ATV and NTSC signals to determine the worst-case Undesired signal level. An additional, system- specific, test may be conducted with vertical synchronization to validate any claim that this is an effective means for reducing interference. In this additional test, the expert observers will determine the threshold of visibility for co-channel, ATV-into-NTSC interference when the two video signals are in phase vertically.

Select Channel 12 for the NTSC signal(s) and for the ATV channel. Tune the appropriate synthesizers to approximately 251 MHz. Use appropriate carrier offsets, as specified by the proponent. Tune Synthesizers 1 and 2 to the same frequency, or to the frequencies specified by the proponent for carrier offset, for these co-channel interference tests.

With the undesired signal at zero attenuation, measure the RF power level of that signal using appropriate metrology. In the steps to follow, determine the undesired signal levels indirectly by noting the attenuator settings. Report results by subtracting the calibrated attenuator settings from the RF power level measured at zero attenuation.

Execute the following steps to determine the range of interference signal levels to be tested:

(1) With the undesired signal at maximum attenuation, adjust the RF amplitude of the desired signal to -55 dBm for NTSC and Enhanced NTSC desired signals and the Weak level for desired Simulcast signals.

(2) Increase the RF amplitude of the undesired signal to the threshold of visibility of the interference, as determined by expert observers. Use the method specified by the Video Subjective Test Procedures manual to determine the threshold. Note the attenuator setting for the undesired signal.

(3) With the desired signal restored, increase the undesired signal amplitude to the point of unusability of the system, as judged by the expert observers. Note the attenuator setting for the undesired signal.

(4) Decrease the level of the undesired signal to 2 dB below the previously-determined threshold of visibility, using the calibrated attenuator.

(5) The two levels of the undesired signal, that were noted in Steps 2 and 3 above, determine the range over which any subsequent subjective evaluation will be performed. Prepare DVTR recordings, as specified by the Video Subjective Test Procedures manual, for use in that evaluation. Make a 15-second recording at each specified attenuator setting, and note the SMPTE time code at the start of each recording.

(6) Repeat Step 1, adjusting the desired signal level to -35 dBm for NTSC and Enhanced NTSC desired signals and to the Moderate level for desired simulcast signals. Then, repeat Steps 2 through 5.

(7) Repeat Step 1, adjusting the desired signal level to -15 dBm for NTSC and Enhanced NTSC desired signals and to the Strong level for desired simulcast signals. Then, repeat Steps 2 through 5.

19.5.3.2.2. Adjacent Channel Interference

For this test, the undesired signal occupies a channel that is adjacent, in either direction, to the one occupied by the desired signal. The notations "n - 1" and "n + 1" may be used to designate the lower and upper adjacent channels, respectively, where "n" designates the channel occupied by the desired signal.

Execute the following steps:

(1) NTSC, as the desired signal, is on Channel 12, modulated according to FCC specifications. The peak-of- sync carrier level, measured at the input to the NTSC receivers, is set, in turn, at -55 dBm, -35 dBm, and -15 dBm. The undesired signal is, first, on Channel 11 (n - 1) and, then, on Channel 13 (n + 1). The two sync generators are not locked. Monitor the phasing of the vertical blanking intervals of the two RF signals to ensure that they are substantially offset from each other. At each of the three carrier levels, for the desired signal, and on each of the two channels, for the undesired signal, adjust the RF level of the undesired signal to find the threshold of visibility of the interference. Use the method specified in Section 1.8.1 of the Video Subjective Test Procedures manual. Record the RF level at the threshold of

visibility. A suggested format for this documentation is shown in Figure 19-8.

(2) According to the type of system being tested, execute the appropriate step(s) below:

(a) To test an Enhanced-NTSC system, replace the desired NTSC signal on Channel 12 with the Enhanced-NTSC signal. Measure the power level of this signal, at the peak of sync, at the input to the proponent-furnished demodulator. With these modifications, repeat the procedure of Step 1.

(b) To test a Simulcast system, replace the desired NTSC signal on Channel 12 with the Simulcast signal. Repeat the procedure of Step 1 utilizing the Weak, Moderate, and Strong levels (per Section 19.2.3) as input to the proponent supplied demodulator.

(3) Return the NTSC signal to Channel 12 as the desired signal. According to the type of system being tested, execute the appropriate step(s) below:

(a) To test an Enhanced-NTSC system, replace the undesired NTSC signal on Channel 11 or Channel 13 with the Enhanced-NTSC signal. With this modification, repeat the procedure of Step 1.

(b) To test a Simulcast system, replace the undesired NTSC signal on Channel 11 or Channel 13 with the simulcast signal. Repeat the procedure of Step 1 utilizing the Weak, Moderate, and Strong levels as input to the proponent supplied demodulator.

(4) The following steps test interference between the proponent ATV signal and another identical ATV signal. According to the type of system being tested, execute the appropriate step(s) below:

(a) To test an Enhanced-NTSC system, replace the desired NTSC signal on Channel 12 with the Enhanced-NTSC signal. That same Enhanced-NTSC signal, delayed, serves as the undesired signal on Channel 11 or Channel 13. At each of the three carrier levels, for the desired signal, and on each of the two channels, for the undesired signal, vary the delay to find the worst-case visibility of the interference. Measure all RF power levels at the peak of sync. With these modifications, repeat the procedure of Step 1.

(b) To test a Simulcast system, replace the desired NTSC signal on Channel 12 with the Simulcast signal. That

same simulcast signal, delayed, serves as the undesired signal on Channel 11 or Channel 13. At each of the three carrier levels (Weak, Moderate, and Strong), for the desired signal, and on each of the two channels, for the undesired signal, vary the delay to find the worst-case visibility of the interference. With these modifications, repeat the procedure of Step 1.

19.5.3.2.3. UHF Taboo Channel Interference

The UHF taboos originate from several interference mechanisms, such as intermodulation, half-IF, IF beats, and IF image frequencies. For a given desired channel, there may be twelve prohibited channel assignments resulting from these mechanisms. In order to reduce the total number of tests, and the required test time for each proponent system, only a subset of these prohibited channels will be tested.

The half-IF interference effect is caused by the difference frequency between the second harmonic of the undesired signal and the second harmonic of the local oscillator falling within the IF band of the receiver. For an IF of approximately 44 MHz, the prohibited channel is n + 4. No identified ATV proponent has indicated that any other IF will be employed in the equipment to be provided to the testing laboratory. Therefore, the laboratory plans to test the half-IF effect only on Channel n + 4. This plan is subject to change if another IF is employed.

An IF beat can result from either of two interactions, between the desired and undesired picture carriers, that fall within the IF band of the receiver.

For NTSC signals, a beat may be generated at 42 MHz between picture carriers that are seven channels apart. For NTSC signals, a beat may be generated at 43.5 MHz by a picture carrier and an aural carrier that are eight channels apart.

There are two sources of image interference; one related to a picture carrier, and the other related to a sound carrier. Image interference mechanisms, unlike those described above, are linear. In an NTSC receiver, the desired carrier frequency is below the frequency of the local oscillator by the IF. However, an undesired carrier at the so-called "image frequency", that is above the desired carrier by twice the IF, will produce a spurious signal within the IF band. For a 44-MHz IF, the sound image channel is Channel n + 14, and the picture image channel is Channel n + 15. Both of these channels will be tested.

For these tests, UHF Channel 23 is used for the desired channel. Each taboo is tested individually.

Four cases must be tested: (1) NTSC into NTSC, as a reference; (2) NTSC into ATV; (3) ATV into NTSC; and (4) ATV into ATV. Case 4 is subject to certain limitations, previously discussed.

For each undesired channel assignment shown in Table 19.3, execute Steps 1 through 4 that follow the table.

TABLE 19.3

	UHF TABOO	UNDESIRED CHANNEL
Non-Linear	n - 8 IF Beat	15
	n - 7 IF Beat	16
	n - 2 Intermodulation	21
	n + 2 Intermodulation	25
	n + 4 Half IF	27
	n + 7 IF Beat	30
	n + 8 IF Beat	31
Linear	n + 14 Sound Image	37
	n + 15 Picture Image	38

Execute the following steps:

(1) NTSC, as the desired signal, is on Channel 23, modulated according to FCC specifications. The peak-of- sync carrier level, measured at the input to the NTSC receivers, is set, in turn, at -55 dBm, -35 dBm, and -15 dBm. The undesired signal is on each channel of Table 19.3, in turn. The two sync generators are not locked. At each of the three carrier levels, for the desired signal, and on each of the taboo channels, for the undesired signal, adjust the RF level of the undesired signal to find the threshold of visibility of the interference. Use the method specified in Section 1.8.1 of the Video Subjective Test Procedures manual. Record the RF level at the threshold of visibility. A suggested format for this documentation is shown in Figure 19-8.

(2) According to the type of system being tested, execute the appropriate step(s) below:

(a) To test an Enhanced-NTSC system, replace the desired NTSC signal on Channel 23 with the Enhanced-NTSC signal. Measure the power level of this signal, at the peak of sync, at the input to the proponent-furnished demodulator. With these modifications, repeat the procedure of Step 1.

(b) To test a Simulcast system, replace the desired NTSC signal on Channel 23 with the Simulcast signal. Repeat the procedure of Step 1 utilizing Weak, Moderate, and Strong levels as input to the proponent supplied demodulator.

(3) Return the NTSC signal to Channel 23 as the desired signal. According to the type of system being tested, execute the appropriate step(s) below:

(a) To test an Enhanced-NTSC system, replace the undesired NTSC signal on each taboo channel, shown in Table 19.3, with the Enhanced-NTSC signal. With this modification, repeat the procedure of Step 1 for each taboo channel.

(b) To test a Simulcast system, replace the undesired NTSC signal on the taboo channel with the Simulcast signal. Repeat the procedure of Step 1 for each taboo channel utilizing the Weak, Moderate, and Strong levels as input to the proponent supplied demodulator.

(4) The following steps test interference between the proponent ATV signal and another identical ATV signal. According to the type of system being tested, execute the appropriate step(s) below:

(a) To test an Enhanced-NTSC system, replace the desired NTSC signal on Channel 23 with the Enhanced-NTSC signal. That same Enhanced-NTSC signal, delayed, serves as the undesired signal on the taboo channel. At each of the three carrier levels, for the desired signal, and on each of the taboo channels, for the undesired signal, vary the delay to find the worst-case visibility of the interference. Measure all RF power levels at the peak of sync. With these modifications, repeat the procedure of Step 1 for each taboo channel.

(b) To test a Simulcast system, replace the desired NTSC signal on Channel 23 with the Simulcast signal. That same Simulcast signal, delayed, serves as the undesired signal on the taboo channel. At each of the three carrier levels, for the desired signal, and on each of the taboo channels, for the undesired signal, vary the delay to find the worst-case visibility of the interference. Repeat the procedure of Step 1 for each taboo channel utilizing the Weak, Moderate, and Strong levels as input to the proponent supplied demodulator.

19.5.3.2.4. Discrete Frequency Interference

The setups for these tests are the same as those described in Section 19.5.3.1.1 for the ATV/NTSC tests, with the few exceptions that follow. Only the Calibration and NTSC-1 setups, specified in Table 19.1, will be tested. The undesired NTSC signal, used in the

ATV/NTSC tests, is replaced by a discrete frequency for these t , using means described below. To enhance the visibility of the interference, the discrete- frequency serves as a carrier, amplitude modulated (25% ±10%) by a 400-Hz sine wave.

Channel 12 is the test channel. Set the desired signal to the Moderate level, as measured at the ATV receiver input.

Refer to Figure 19-9 for a functional diagram of the setup for this test.

The modulated CW interference frequencies span a 12 MHz range, from 3 MHz below the test channel to 3 MHz above the test channel, i.e., from 201 - 213 MHz. The discrete frequencies to be used are in approximate 0.25 MHz increments across Channel 12 (204-210 MHz). The precise frequencies are to be selected such that, at the display, the beat frequency in each case is a harmonic of the display horizontal scan frequency. For example, assume a visual carrier with zero offset at 205.250000 MHz. For an 1125-line, 60-Hz display, f_H is 33.750 kHz. Therefore, harmonics of f_H are 33.750, 67.50, 135.00, ... kHz. Select the seventh harmonic of f_H (236.25 kHz) as the increment of frequency. Then, some of the test frequencies are:

205.25 - 17(0.23625) MHz = 201.23375 MHz

.
.
.

205.25 - 5(0.23625) MHz = 204.06875 MHz
205.25 - 4(0.23625) MHz = 204.30500 MHz
205.25 - 3(0.23625) MHz = 204.54125 MHz
205.25 - 2(0.23625) MHz = 204.77750 MHz
205.25 - 1(0.23625) MHz = 205.01375 MHz
205.25 ± 0 MHz = 205.25000 MHz
205.25 + 1(0.23625) MHz = 205.48625 MHz
205.25 + 2(0.23625) MHz = 205.72250 MHz

.
.
.

205.32 + 32(0.23625) MHz = 212.88000 MHz

At each of these frequencies, increase the RF amplitude of the undesired signal to the threshold of visibility of the interference, as determined by expert observers using the method described in Section 1.6.2 of the Video Subjective Test Procedures manual. Note the signal amplitude with the desired signal temporarily fully attenuated.

Make a rough plot of these data points, as threshold level versus frequency, and try to draw a smooth curve to fit the data, e.g. to the "W-curve" for NTSC. Examine the curve to identify inflection points. At the direction of expert observers, take additional data at frequencies close to the inflection points in order to pinpoint the frequencies of maximum and minimum interference. The additional

points shall be taken at frequencies that are appropriate multiples of f_H.

Some ATV systems employ time expansion in the receiver. In such cases, the display frequencies do not have a one-to-one relationship with the transmission frequencies. Select the test frequencies for these systems such that the beat frequencies, after time expansion, are harmonics of f_H, the display rate.

19.5.3.3. Presentation of Data

Document measurements of co-channel, adjacent-channel, and taboo-channel interference by completing the form shown in Figure 19-8. Make all recordings necessary to support the video subjective test procedures and log the values of all variables for each recording.

Present the measurements of discrete-frequency interference in a graphical format, similar to the "W- curve" for NTSC. At points of peak interference, make DVTR recordings, if desired, and log the test frequencies and amplitudes.

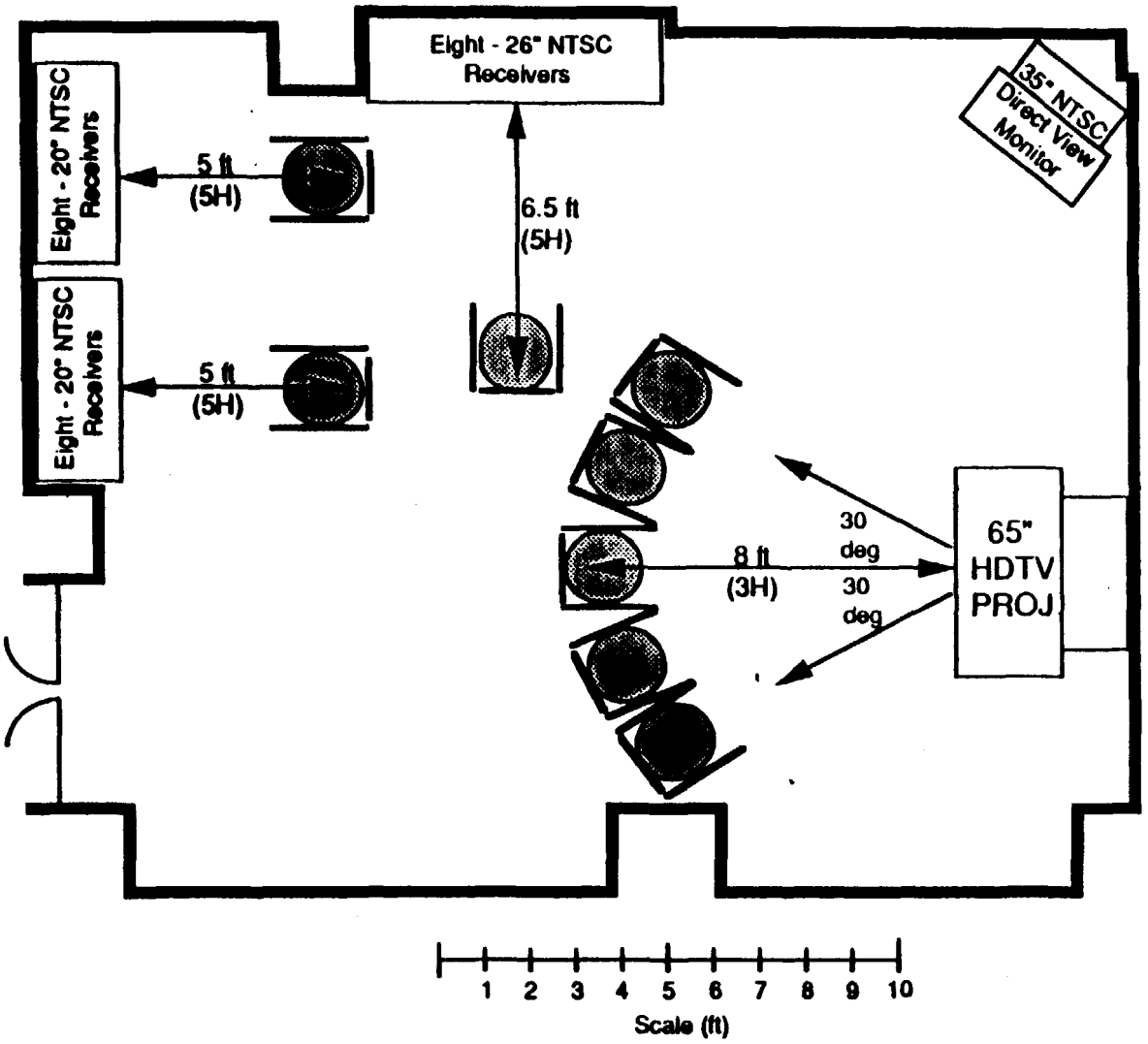

Walls are Gray

Illumination is 6500°K

Figure 19-1 - General Design and Layout of the Viewing Studio

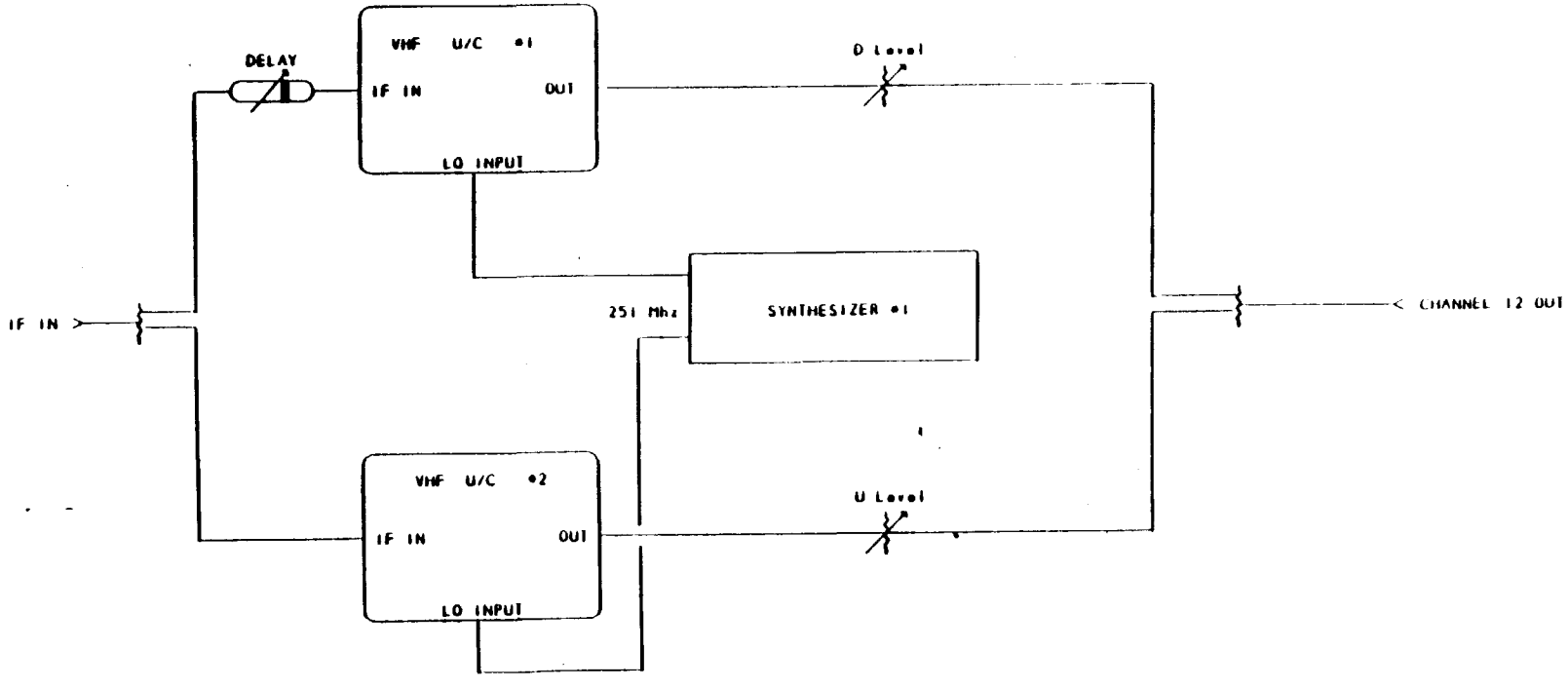

ATV Test Procedures **Figure 19-2 - Setup for Multipath Test with Single Leading Ghost** 9/25/90

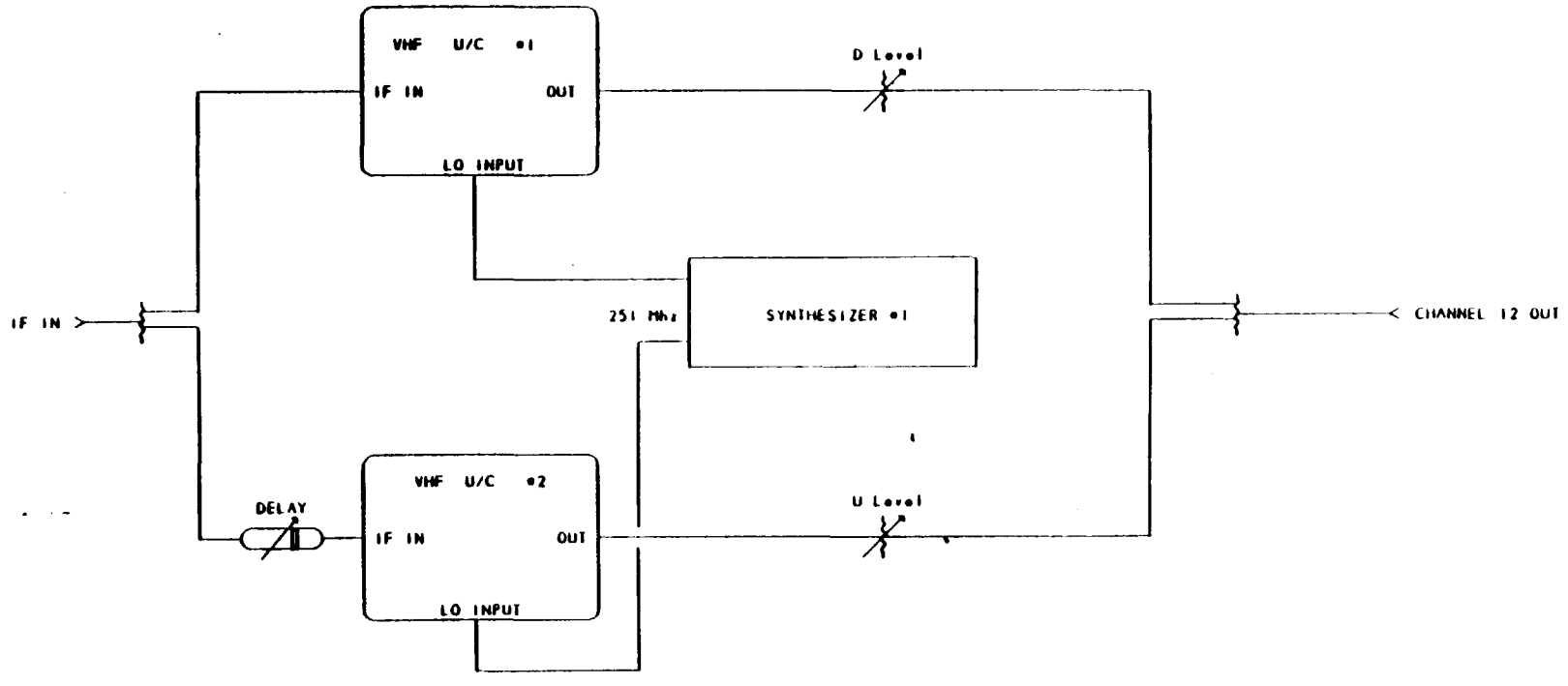

Figure 19-3 - Setup for Multipath Test with Single Lagging Ghost

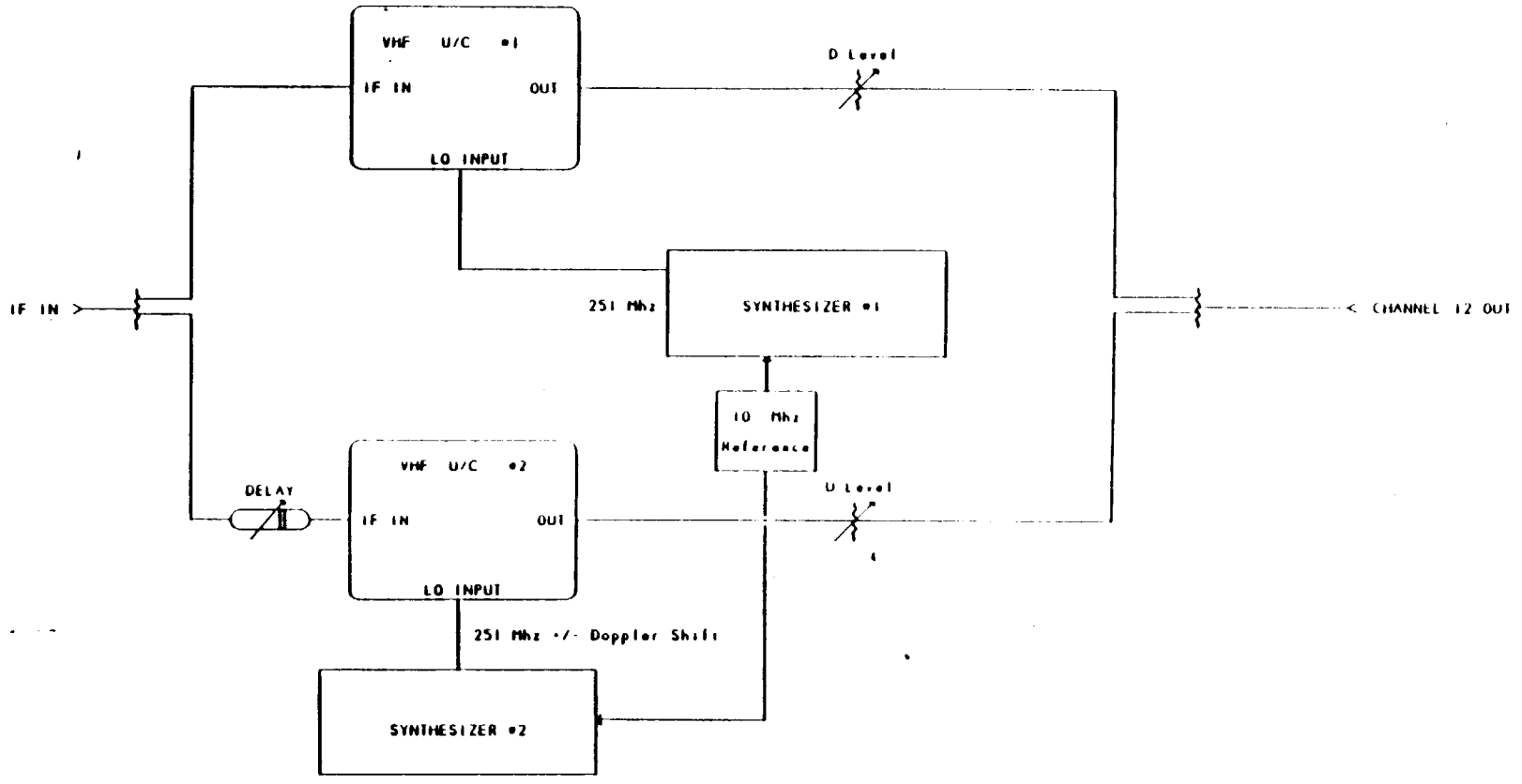

Figure 19-4 - Setup for Airplane Flutter Test

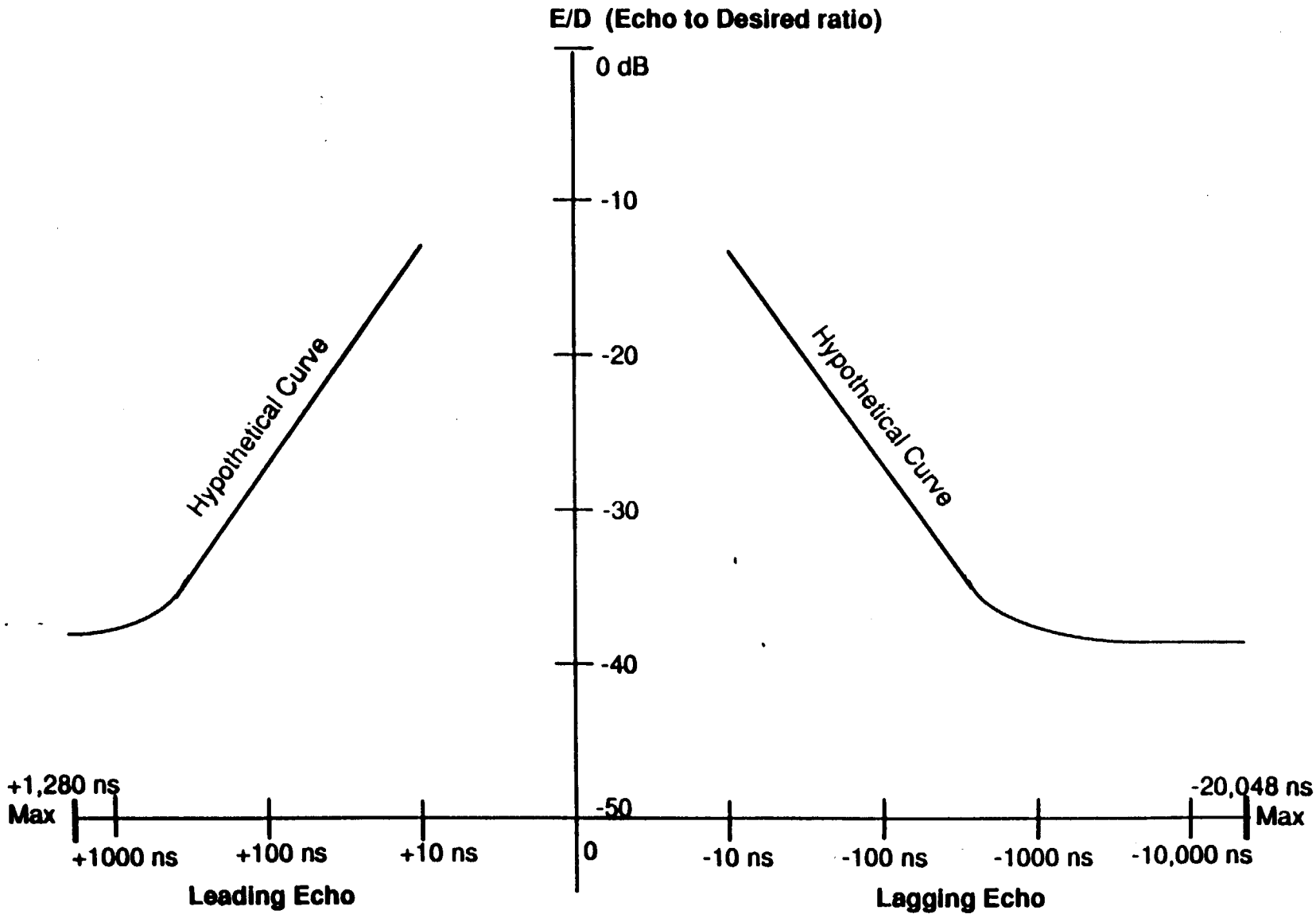

Figure 19-5 - Presentation Format for Multipath Data

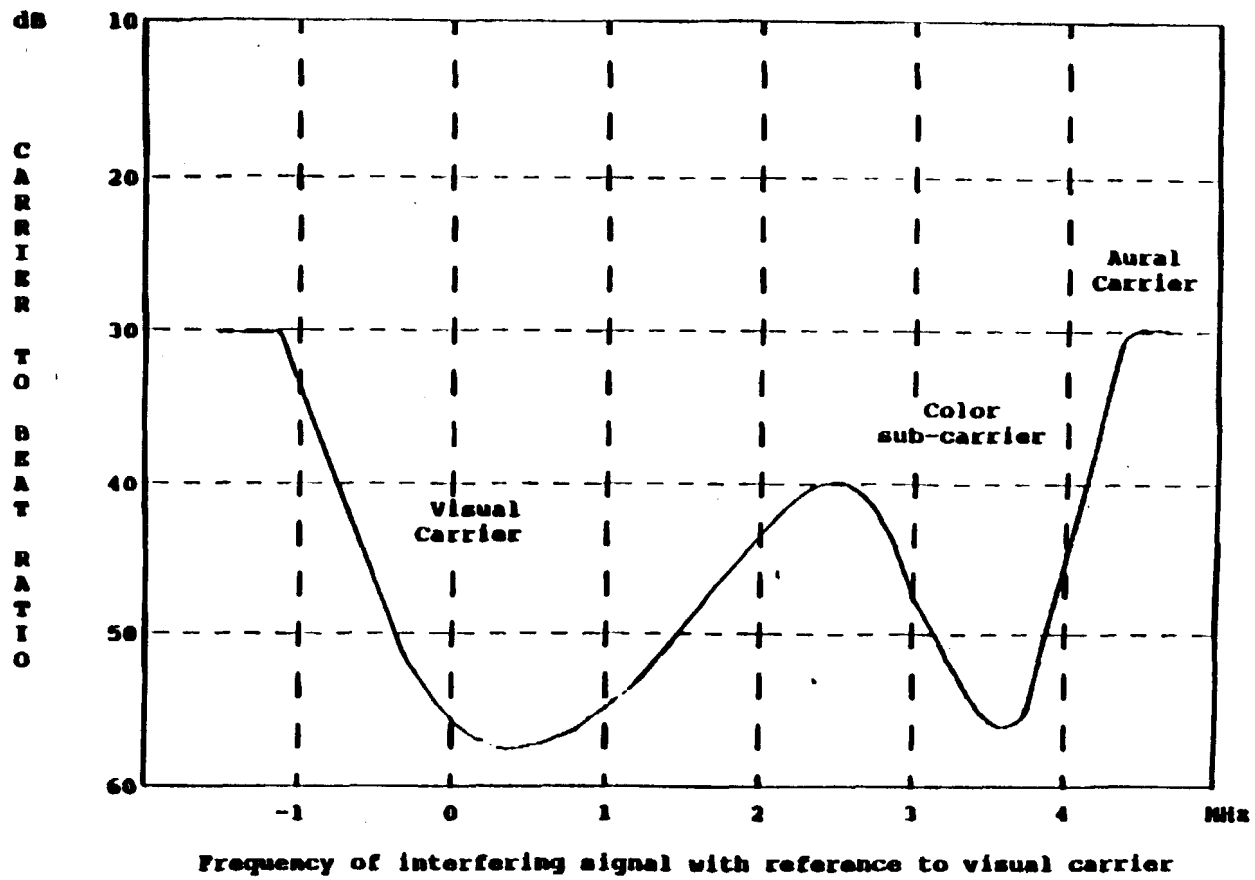

(Example of Presentation Format for Discrete Frequency Interference Data)

Figure 19-6 - "W" Curve for NTSC

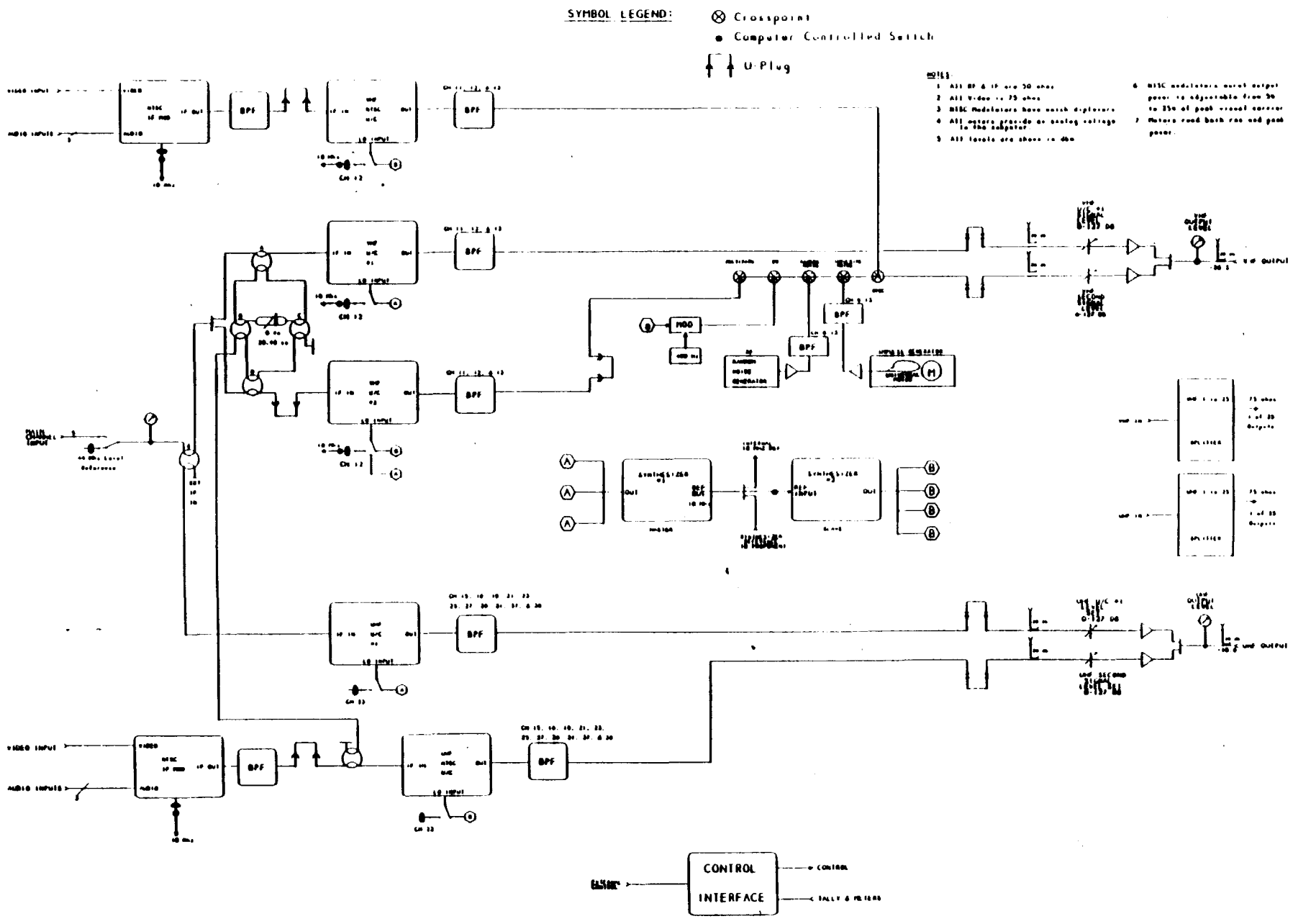

Figure 19-7 - RF Test Bed Block and Level Diagram

Test Date: _____ ATV Carrier Freq.: _____ Hz. Video Tape No.: _____ Test Data Accepted by: _____

ATV Systems: _____ NTSC Carrier Freq.: _____ Hz. Time Code: _____ Test Engineer: _____

THRESHOLD OF VISIBILITY OF INTERFERENCE

	D Level		U Level				Notes
	NTSC	ATV	NTSC (U) into NTSC (D)	NTSC (U) into ATV (D)	ATV (U) into NTSC (D)	ATV (U) into ATV (D)	
1 Co-Channel	-35 dBm	M*					
	-55 dBm	W*					
2 Upper Adj Ch.	-15 dBm	S*					
	-35 dBm	M*					
	-55 dBm	W*					
3 Lower Adj. Ch.	-15 dBm	S*					
	-35 dBm	M*					
	-55 dBm	W*					
4 UHF Taboos					-		
n + 15	-15 dBm	S*					
	-35 dBm	M*					
	-55dBm	W*					
n + 14	-15 dBm	S*					
	-35 dBm	M*					
	-55dBm	W*					
n + 8	-15 dBm	S*					
	-35 dBm	M*					
	-55dBm	W*					
n + 7	-15 dBm	S*					
	-35 dBm	M*					
	-55dBm	W*					
n + 4	-15 dBm	S*					
	-35 dBm	M*					
	-55 dBm	W*					
n + 2	-15 dBm	S*					
	-35 dBm	M*					
	-55 dBm	W*					
n - 2	-15 dBm	S*					
	-35 dBm	M*					
	-55 dBm	W*					
n - 7	-15 dBm	S*					
	-35 dBm	M*					
	-55 dBm	W*					
n - 8	-15 dBm	S*					
	-35 dBm	M*					
	-55 dBm	W*					

*Note: S, M and W denote Strong, Moderate and Weak signal levels, respectively

Figure 19-8 - Example of Data Reporting Format

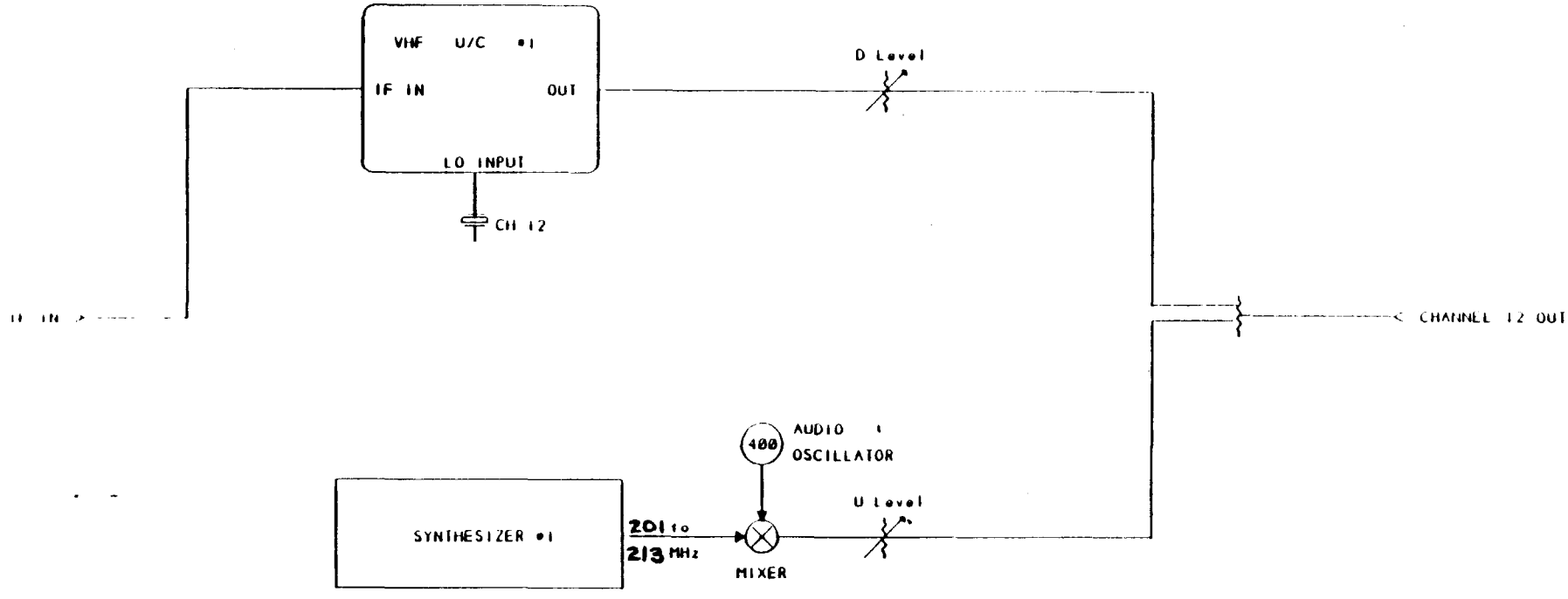

Figure 19-9 - Setup for Discrete Frequency Interference Test

ATV Test Procedures

Cable Television Transmission Tests

TABLE OF CONTENTS

TABLE OF CONTENTS i
LIST OF FIGURES iii
OUTLINE OF OBJECTIVE CABLE TELEVISION TESTS iv
Overview v

1 Discrete Frequency Interference
- 1.1 Introduction 1
- 1.2 General Description of Method 1
- 1.3 Test and Measuring Equipment 2
- 1.4 Procedures 2
  - 1.4.1 Manual Sweep
  - 1.4.2 Threshold Determination
  - 1.4.3 Measurement Technique & C/I Computation
  - 1.4.4 Presentation of Data

2 Minimum Carrier to Noise(C/N) Requirements
- 2.1 Introduction 5
- 2.2 General Description of Method 5
- 2.3 Test and Measuring Equipment 7
- 2.4 Procedures 7
  - 2.4.1 Noise Threshold Determination
  - 2.4.2 Ranging Test
  - 2.4.3 Measurement Technique & C/N Computation
  - 2.4.4 Presentation of Data

3 Intermodulation Distortion
- 3.1 Introduction 10
- 3.2 General Description of Method 10
- 3.3 Test and Measuring Equipment 13
- 3.4 Procedures 13
  - 3.4.1 Threshold Determination
  - 3.4.2 Ranging Test
  - 3.4.3 Presentation of Data

4 Effect of Multipath and Multiple-Microreflections
- 4.1 Introduction 16
- 4.2 General Description of Method 16
- 4.3 Test and Measuring Equipment 18

4.4 **Procedures** 18
4.4.1 Single Reflections
4.4.2 Ranging Test
4.4.3 Presentation of Data

5 **Effect of High Level Sweep**
5.1 **Introduction** 21
5.2 **General Description of Method** 21
5.3 **Test and Measuring Equipment** 21
5.4 **Procedures** 22
5.4.1 Setup and Recording
5.4.2 Presentation of Data

6 **Hum and Low Frequency Noise**
6.1 **Introduction** 23
6.2 **General Description of Method** 23
6.3 **Test and Measuring Equipment** 24
6.4 **Procedures** 24
6.4.1 Threshold Determination
6.4.2 Ranging Test
6.4.3 Presentation of Data

7 **Incidental Carrier Phase Modulation**
7.1 **Introduction** 27
7.2 **General Description of Method** 27
7.3 **Test and Measuring Equipment** 28
7.4 **Procedures** 28
7.4.1 Threshold Determination
7.4.2 Ranging Test
7.4.3 Presentation of Data

8 **Fiber Optic Tests**
8.1 **Introduction** 31
8.2 **General Description of Method** 31
8.3 **Test and Measuring Equipment** 31
8.4 **Procedures** 32
8.4.1 Setup and Recording
8.4.2 Presentation of Data

Appendix A Perception Threshold Determination Criteria 34
Appendix B Criteria for Conducting Ranging Test 36

LIST OF FIGURES

FIGURE	SUBJECT
1.1	Discrete Frequency Interference Flow Chart.
1.2	Permissible Limits for NTSC minimum Carrier-to-Beat Ratio (Single Frequency).
1.3	Discrete Frequency Interference Test Equipment Setup Block Diagram.
2.1	Minimum Carrier-to-Noise Requirement Test Equipment Setup Block Diagram.
2.2	Minimum Carrier-to-Noise Requirement Flow Chart.
3.1	Intermodulation Distortion Test Equipment Setup Block Diagram.
3.2	Intermodulation Distortion Flow Chart.
4.1	Effect of Microreflection Test Equipment Setup Block Diagram.
4.2	Effect of Microreflection Flow Chart.
5.1	Effect of High Level Sweep Test Equipment Setup Block Diagram.
6.1	Hum and Low Frequency Noise Test Equipment Setup Block Diagram.
7.1	Incidental Carrier Phase Modulation Test Equipment Setup Block Diagram.
8.1	Peak Power Test Equipment Setup Block Diagram.

OUTLINE OF OBJECTIVE CABLE TELEVISION TESTS

[PS/WP-4 attribute numbers shown in brackets]

A. Cable Transmission

1.	Discrete frequency interference	[2.3]
2.	Minimum carrier to noise requirement	[2.8]
3.	Effect of microreflections	[2.7]
4.	Effect of high level sweep	[added]
5.	Intermodulation distortion 5.1 Second Order 5.2 Third Order	[2.4]
6.	Hum and low frequency noise	[2.9]
7.	Peak power	[2.2]
8.	Incidental Carrier Phase Modulation	[2.10]

B. Fiber Optic Transmission

1.	Discrete Frequency Interference	[2.3]
2.	Signal-to-Distortion Measurements	[added]

Reference Documents:

--- PS/WP4-0048 Proposed Testing Procedures for ATV Systems Alternate Media and Broadcast Interface.

--- PS/WP4 Proposed Testing Procedures for ATV Systems Suitability for Fiber-Optic Transmission.

--- PS/WP6-0050 February 1988 PS/WP6 Chairman's Report.

Overview

Part of the materials in this test procedure are excerpted from the PSWP4-0048 Document titled "Proposed Testing Procedures for Advanced Television Systems, Alternate Media and Broadcast Interface".

The objective of these test procedures is to identify and carry out tests on the key technical and operating parameters required for planning and implementation of Advanced Television (ATV) Systems in the existing cable television system environment. Evaluation is done by simulation of various levels of cable system impairments. Actual simulation is accomplished by the construction of a cable television simulation test system or a cable test bed. The cable television impairments are either generated internally using the cable test bed or introduced into the cable television test system. The level of impairment is increased or decreased about the threshold of visibility. The impairing signal is measured. The picture quality of the ATV signal together with the impairing signal are recorded using a digital Video Tape Recorder (VTR) over an impairment range from unwatchable to imperceptible qualities.

Co-channel interference, adjacent channel interference, group delay and channel bandwidth are not included in these cable television test procedures. These parameters are common to both terrestrial broadcast and cable transmission. Please refer to the ATV Test Procedure Manual for these impairments. On the other hand, some test parameters that are specified in the cable test procedures, may be very similar to those in the broadcast test procedures. These test parameters, at Cable Television Laboratories' discretion, may or may not be performed.

The suggested video program test materials used in the cable transmission tests are listed under the test equipment of each section and shall be the same as those recommended by the FCC-AC Systems Subcommittee Working Party Six. In the event of a discrepancy, the Working Party Six recommendation shall prevail.

A Continuous Wave (CW) carrier is often shown on the test equipment setup block diagrams. Its purposes are to provide a reference to set the output power level of the ATV signal under test and to serve as a reference level for the spectrum analyzer display.

The test parameters listed in these test procedures are the recommended list of comprehensive test set. The tests will be performed by Cable Television Laboratories personnel and by a small panel of expert viewers.