limited to 10 kHz. An audio amplifier may be necessary to increase the output power of the band limited noise to a perceptible level.

6.4.2 Ranging Test

The suggested operation sequence of the ranging test is listed below:

a. Replace the computer controllable step attenuator by the continuously variable attenuator.
b. Set the interference level at the threshold level as determined in subsection 6.4.1 step f.
c. Verify the threshold with the panel of expert viewers. Make a tape recording for a duration of 10 seconds and note the SMPTE time code.
d. Decrease the interference level by 3 dB and verify with the panel of expert viewers that the picture quality is free from any external impairments. Make a 10-second recording and note the SMPTE time code.
e. Increase the interference level until an unanimous agreement is reached among the panel of expert viewers that the picture quality is not suitable for day-to-day viewing. Make a 10 seconds recording. Note the SMPTE time code and the corresponding hum modulation impairment level.
f. Establish intermediate steps by following the instructions given by the subjective evaluation specialist. A suggested method of establishing intermediate steps is outlined in Appendix B.
g. Repeat steps b to f using low frequency noise which is band limited to 10 kHz.

6.4.3 Presentation of Data

The following data should be recorded:

From the observations of the test, note any concerns or comments regarding the effect of hum and low frequency noise distortions.

With the digital VTR, record all steps as established by the ranging tests. These should include hum and low frequency noise distortions.

From the plotter, plot separately the local oscillator spectrum at perception threshold for hum modulation distortion and for low frequency distortion.

7 Incidental Carrier Phase Modulation

7.1 Introduction

The effect of Incidental Carrier Phase Modulation (ICPM) is becoming of greater concern to cable system operators. Major sources of ICPM are satellite receivers, cable channel converters, cable television channel modulators which employ a synthesized local oscillator. In general, the amount of ICPM increases at each oscillator in the system. Therefore, it is necessary to explore the effect of ICPM on an ATV system and quantify the amount of randomly injected ICPM required to cause perceptible degradation.

The method chosen to quantify the amount of ICPM is direct measurement with a spectrum analyzer. The impairment caused by random phase noise on NTSC exhibits itself as fine horizontal lines with a relatively higher brightness randomly positioned over the video frames.

7.2 General Description of Method

ICPM is introduced to the ATV system by frequency modulating the upconverter local oscillator with band limited video noise.

Begin the test with the interference below visible level then increase the interference level by 1 dB every 3 seconds until an unanimous agreement among the participating viewers has reached indicating the transition from imperceptible to perceptible (or vice versa). A complete description of the methodology of determining a threshold is described in Appendix A. The perception threshold is calculated and recorded on the computer data base. After the perception threshold is established, the computer directs the plotter to plot the frequency spectrum of the local oscillator at threshold. The computer then sets the interference level to minimum and the local oscillator frequency spectrum

The equipment setup for the ranging test is identical to that of the threshold determination except that the computer controlled attenuator is replaced by a continuously variable manual operated attenuator.

Under the guidance of the subjective evaluation specialist, the picture quality is intentionally degraded by introducing various level of ICPM into the ATV signal under test. An upper and a lower boundaries are established. Several intermediate picture quality level are deduced in a successive manner. The desired number of intermediate steps is nominally between 6 to 9 steps. Each step is recorded on tape using the digital VTR for a duration of 10 seconds. The tape segments are saved for archival. A detailed description of the ranging test is given in Appendix B.

7.3 Test and Measuring Equipment

Video Noise Generator such as Tek 1430 or equivalent
IF-to-Channel 12 upconverter
RF Generator such as HP 8656B or equivalent
RF Mixer such as HP 10514A or equivalent
Spectrum Analyzer such as HP 8568B or equivalent
Plotter such as HP 7475A or equivalent
Audio amplifier
Low pass filter 20 kHz
Directional coupler and variable attenuators

7.4 Procedures

7.4.1 Threshold Determination

a. Connect the equipment as illustrated in Figure 7.1.
b. Set interference level to minimum and input to demodulator at proper level.
c. Execute the ICPM test sequence.
d. The computer increases the interference level by 1 dB every 3 seconds and simultaneously monitors the perception indicators from the viewers. The computer records the ICPM distortion level once a consensus is reached on just perceptible ICPM distortion.
e. The computer decreases the interference level by 1 dB every 3 seconds until a consensus is reached among the panel of expert viewers that ICPM distortion is no longer perceptible. The distortion level is recorded.
f. The cycle described in steps d & e is repeated four times.
g. The test sequence stops when the five cycles are completed and the data is validated by the computer. The

computer calculates the amount of ICPM at threshold and initiates two plots of the local oscillator spectrum, one at threshold and the other without any phase modulation.

7.4.2 Ranging Test

The suggested operational sequence of the ranging test is listed below:

a. Replace the computer controllable step attenuator by a continuously variable attenuator.
b. Set the interference level at the threshold level as determined in subsection 7.4.1 step g.
c. Verify the threshold with the panel of expert viewers. Make a tape recording for a duration of 10 seconds and note the SMPTE time code.
d. Decrease the interference level by 3 dB and verify with the panel of expert viewers that the picture quality is free from any external impairments. Make a 10 seconds recording and note the SMPTE time code.
e. Increase the interference level until an unanimous agreement is reached among the panel of expert viewers that the picture quality is not suitable for day-to-day viewing. Make a 10-second recording. Note the SMPTE time code and the corresponding ICPM impairment level.
f. Establish intermediate steps by following the instructions given by the subjective evaluation specialist. A suggested method of establishing intermediate steps is outlined in Appendix B.

7.4.3 Presentation of Data

The following data should be recorded:

From the observations of the test, note any concerns or comments regarding the effect of ICPM on the ATV system under test.

With the digital VTR, record all steps as established in the ranging test. Each segment has a 10-second duration.

From the spectrum analyzer, plot the spectrum of the local oscillator at perception threshold and the spectrum of the local oscillator without any phase modulation.

8 Fiber Optic Tests

8.1 Introduction

Fiber optic systems are becoming more popular in cable television systems as operators react to customer demands for improved picture quality. Amplitude modulated fiber links are used to transport signals from the headend to hub sites through out the system. While it is expected that the intermodulation distortion products from a cable system will be similar in a fiber system this must be tested.

The reaction of the ATV signal to intermodulation distortion on a fiber system will be tested to determine whether there is any difference from normal cable distribution distortion. Only third order distortion with unmodulated carriers will be used to perform the distortion tests on the fiber system. If the results are significantly different from the cable distortion tests then additional tests will be performed to better determine the distortion characteristics of the fiber system.

8.2 General Description of Method

Intermodulation distortion effects are created by using 30 TV modulators and upconverters to simulate a typical cable headend. As shown in Figure 3.1, the generator output is transmitted through a few cable television amplifiers at a level high enough to produce the desired third order intermodulation product. The amplified signals are then fed to a narrow bandpass filter. The function of the filter is to select the third order intermodulation product. The output level of the intermodulation distortion is controlled by the variable attenuator, AT1. The distortion products and the ATV signal are passively combined and fed to the AM fiber transmission line and then to ATV demodulator or a spectrum analyzer.

The test sequence is the same as in section 6 except that only third order intermodulation is tested and only unmodulated carriers are used to generate the intermodulation products.

8.3 Test and Measuring Equipment

Cable Amplifiers

Cable Channel modulators
Spectrum analyzer
Plotter
IF-to-channel 12 upconverter
Narrow Bandpass Filter
Fibre optic transmission test system
Splitters, switches, attenuators, etc.

8.4 Procedures

8.4.1 Threshold Determination

a. Connect the equipment as shown in Fig. 8.1 and use the narrow bandpass filter to select the third order intermodulation product for the equipment setup.
b. Execute the threshold determination program.
c. The computer decreases the attenuation of AT1 by 1 dB every 3 seconds and simultaneously monitors the perception indicators from the viewers. The computer records the attenuator setting of AT1 once a consensus on perceptible distortion is reached.
d. The computer increases the attenuation of AT1 by 1 dB every 3 seconds until a consensus is reached among the panel of expert viewers that intermodulation distortion is no longer visible. The attenuator setting of AT1 is recorded.
e. The cycle described in steps c & d is repeated four times.
f. The test sequence ends when the five cycles are completed and the data is validated by the computer. The computer calculates the level of intermodulation distortion at the threshold and initiates a plot of the intermodulation distortion at threshold.
g. Observe the any change in picture quality between signal passing through the fiber system and signals by-passing the fiber system. Describe any differences.

3.4.2 Ranging Test

The suggested operational sequence of the ranging test is listed below:

a. Replace the computer controllable step attenuator by a continuously variable attenuator.

b. Connect the narrow bandpass filter which selects the second order intermodulation products to the test setup.
c. Set the attenuation of AT1 to the threshold value as determined in the threshold test and verify the threshold with the panel of expert viewers.
d. Increase the attenuation of AT1 by 3 dB and verify with the panel of expert viewers that the picture quality is free from any external impairments.
e. Decrease the attenuation until an unanimous agreement is reached among the panel of expert viewers that the picture quality is not suitable for day-to-day viewing.
f. Note the SMPTE time code, and the corresponding intermodulation distortion level.
g. Establish 6 to 9 intermediate steps by following the instructions given by the subjective evaluation specialist. A suggested method of establishing intermediate steps is outlined in Appendix B.

8.4.3 Presentation of Data

The following data should be recorded:

With the digital VTR, record the lower and upper boundaries, the threshold point and the intermediate steps as determined in subsection 8.4.2. Each tape segment has a duration of 10 seconds. In addition, record the signal passing through the fiber system with no injected distortion and the signal by-passing the system so any degradation in picture quality can be observed.

From the computer data base, tabulate the SMPTE time code of each tape segment and the corresponding level of the third order intermodulation products in dB.

Plot the ATV signal spectrum and the third order intermodulation products spectrum at threshold on the same graph using different colors of ink. Indicate on the graph the difference between the levels of the ATV signal and the intermodulation products in dB.

Appendix A

Perception Threshold Determination Criteria

Computer automation is incorporated into the test procedures to minimize procedural errors and expedite timely processing of results. All interferences listed in the cable test procedures involve threshold determination. The algorithm used in the procedures to determine the threshold is commonly known as "Staircase" method. The test sequence is very similar to a dampened negative cosine wave with large excursions on the first cycle and gradually tapering off on subsequent cycles.

The interference level normally begins at the low limit which is determined by a panel of expert viewers. The interference signal level is governed by computer controlled step attenuator(s). The attenuation is increased in 1 dB steps every 3 seconds. The 3-second duration may be changed to a more appropriate value once the first ATV system has been tested. A majority agreement (normally 4 of 5 observers) among the panel of experts indicating the transition from imperceptible to perceptible interference is required for the computer to activate the measurement which measures the relative level of the interference with respect to the ATV carrier. The level is recorded in the computer data base. The interference is decreased in 1 dB steps until the panel of experts comes to a consensus that the interference is no longer visible. The computer measures the relative level of the interference and the level is recorded into the computer data base. The cycle is repeated four times to give a total of five cycles. The panel of experts is free to discuss their observations with each other to expedite a consensus. If, for any reasons, errors are made, the sequence may be aborted and the data collected is discarded. A new sequence can then be initiated.

Validation of Established Threshold

Each trial is expected to cycle in an oscillatory manner and eventually converge to the threshold within a narrow range. A 3 dB range is chosen to take into consideration any hysteresis which may

exist in an individual's visual perception. A hypothetical sequence is illustrated in Figure A1. The threshold is calculated using the following relationships:

1.If the difference between the high and low limits of the last cycle is less than 3 dB, the threshold is determined by taking the average of the last four limits. i.e.

Provided that $I-J \leq 3dB$
Perception Threshold = $(G+H+I+J)/4$

2.If the difference between the high and low limits of the last cycle is more than 3 dB, convergence of the trial must be verified. To verify the convergence of the trial, the difference between the low and high limits of the second and third cycles, and the difference between the low and high limits of the last two cycles are calculated. If the difference of the second and third cycles is larger than that of the fourth and fifth cycles, the perception threshold is equal to the average of the last four limits. i.e.

For the case that $I-J > 3$ dB
Provided that $(C-D+E-F) \geq (G-H+I-J)$
Perception Threshold = $(G+H+I+J)/4$

If the test sequence does not converge with 4 observers the sequence will be repeated using data from only the first 3 observers. If convergence occurs the threshold will be accepted. Otherwise, the same sequence will be repeated once and the set of diverged data will be discarded. If no convergence is obtained after the second sequence t tests director will manually obtain a threshold.

APPENDIX B

Criteria for Conducting Ranging Test

The ranging test defines the boundaries of the impairments, as well as the impairment increment or step size, to be presented to subjects in the formal subjective assessment. Historically, non-expert subjects tend to use scales in such a way that

1.they avoid the boundaries and therefore the end points are infrequently used, and

2.other than the extreme end points, they use the whole scale, regardless of the stimulus range.

The objective of conducting the ranging test is to establish several levels of picture impairments to illustrate a series of progressively degraded pictures, from very impaired to unimpaired, of the ATV system under test. As the impairment gets worse, larger steps can be used as it is not of interest to assess ATV systems with "annoying" and "very annoying" picture impairments.

A determination about the levels of impairment to be injected into the picture must be made prior to conducting subjective assessment of picture impairment tests. These determinations must be made with common sense, experience and accord. Therefore, the best way of conducting the ranging test is judged by a group of expert viewers and supervised by a subjective evaluation specialist. Exact text will be prepared by the specialist and read as instructions to the panel of expert viewers.

The ranging test uses a manual routine. A continuously variable attenuator which is more appropriate for the execution of the ranging test, is employed to control the level of impairment injected into the ATV signal under test. The lower boundary, which corresponds to unimpaired picture quality, is established by setting the impairment 3 dB below the established threshold. The expert viewers are then instructed to determine the upper boundary (note 1) where they consider the picture quality to be unacceptable for normal day-to-day viewing. The range between these two established boundaries is further segmented by six to nine intermediate steps. The additional steps are determined by subjective means and will be strategically placed between the two boundaries.

In the event that the boundaries and step sizes are too great or too small, all the test results will be swayed away from their proper location; for example, something which is not "annoying" will be described as being so. If it is found that the range for any impairment is very narrow, methodology from the February '88 PSWP6 Chairman's Report or PSWP6-0050 will be more appropriate.

Establishment of Intermediate Steps

The preferred method to establish intermediate steps is using the bisecting technique. First, an upper and a lower steps are shown to the expert viewers back and forth a few times. Then, an impaired picture with picture quality between the upper and lower steps is presented to the expert viewers. The expert viewers are asked to judge subjectively whether the presented picture is at mid-scale between the upper and lower steps. The impairment level is adjusted until there is a consensus among the expert viewers. The upper, lower and intermediate steps are shown to the expert viewers and the impairment level of the intermediate step is re-adjusted as many times as deemed necessary to confirm that the presented picture is at mid-scale. The impaired picture is recorded on tape for 10 seconds. The relative level of the impairment at the intermediate point and the corresponding SMPTE time code are noted.

Other additional intermediate steps are established in a similar manner as described above. The tape segments prepared are saved for later subjective assessments or for archival. A summary of the ranging test is shown in Table B1.

In the event that time constraints do not allow the use of the bisection technique the range will be divided into either 2dB or 3 dB increments. The impairments at these levels will be recorded and a decision made as the the impairment levels and number to be used for subjective tests.

note 1 A determination of the point of system failure is also a desirable part of the ranging tests.

TABLE B1 RANGING TEST

TEST: (ALL SYSTEMS) Judgements of Impairments/Interferences

OBJECTIVE: Determine the step size and boundaries of all impairments/interferences to undergo subjective assessments

METHOD: Subjective expert panel agreement

STIMULI: Desired: 50-IRE grey field and single still slide, as appropriate; undesired: color bars with scrolling letters or a matrix pattern and noise, microreflections and multipath, as appropriate

IMPAIRMENT/ INTERFERENCE LEVELS: [to be determined]

PRESENTATIONS: As many as necessary to reach agreement

SESSION STRUCTURE: Casual, expert panel must be in agreement

SESSION DURATION: 1/2 hour each

NUMBER OF SESSIONS: 1 session per impairment

VIEWERS PER SESSION: 4 (visual acuity) viewers make up the expert panel

VIEWERS: Expert viewers only. Expert viewers whose contrast sensitivity, color and hue discrimination and visual acuity have been tested and found to be normal; this requirement will normally be found in subjects under 40 years of age.

notes: The expert panel is instructed to use larger steps as the impairment worsens from mid-scale to the end-point ("very annoying") to save time.

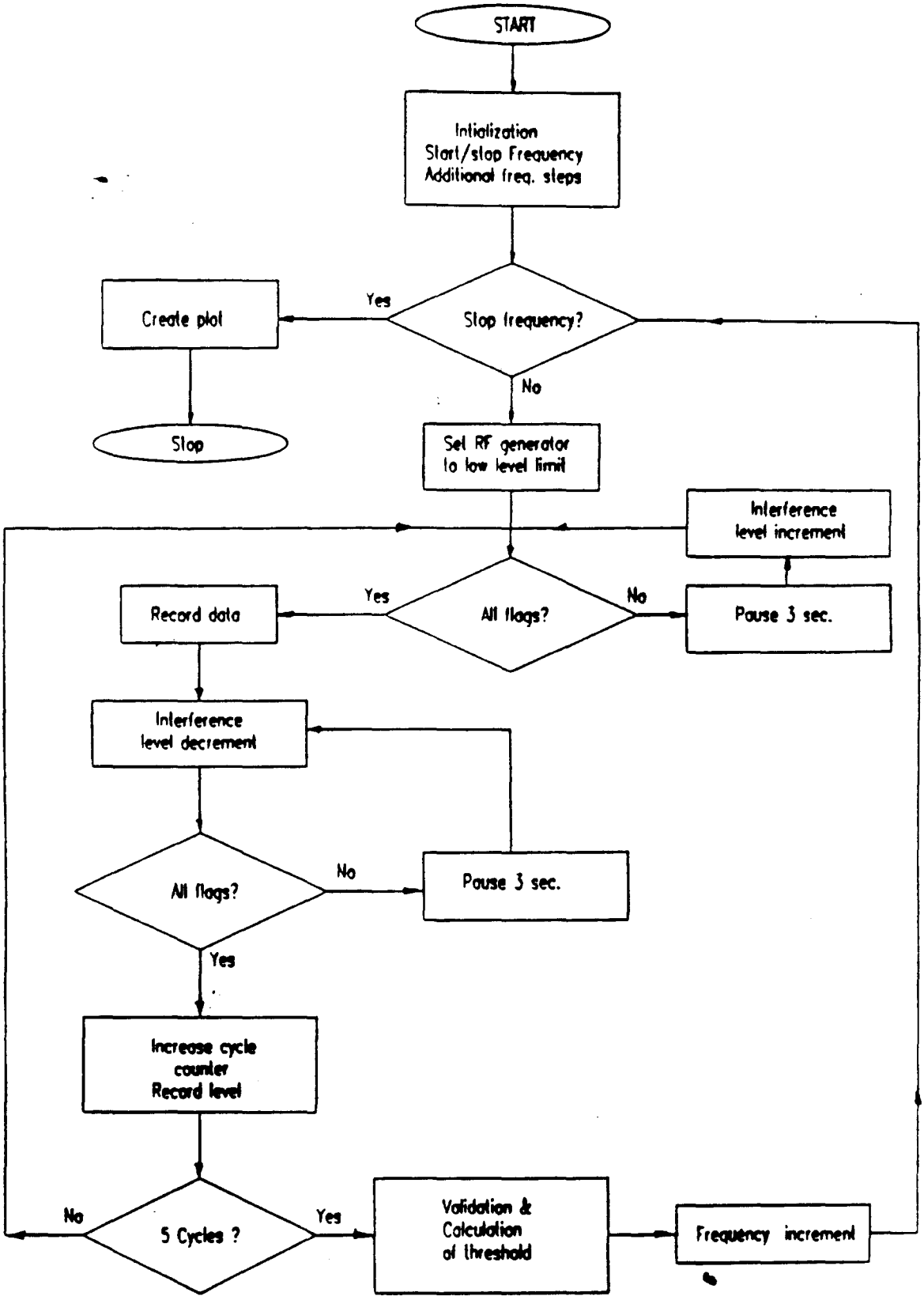

Figure 1.1 Discrete Frequency Interference Flow Chart

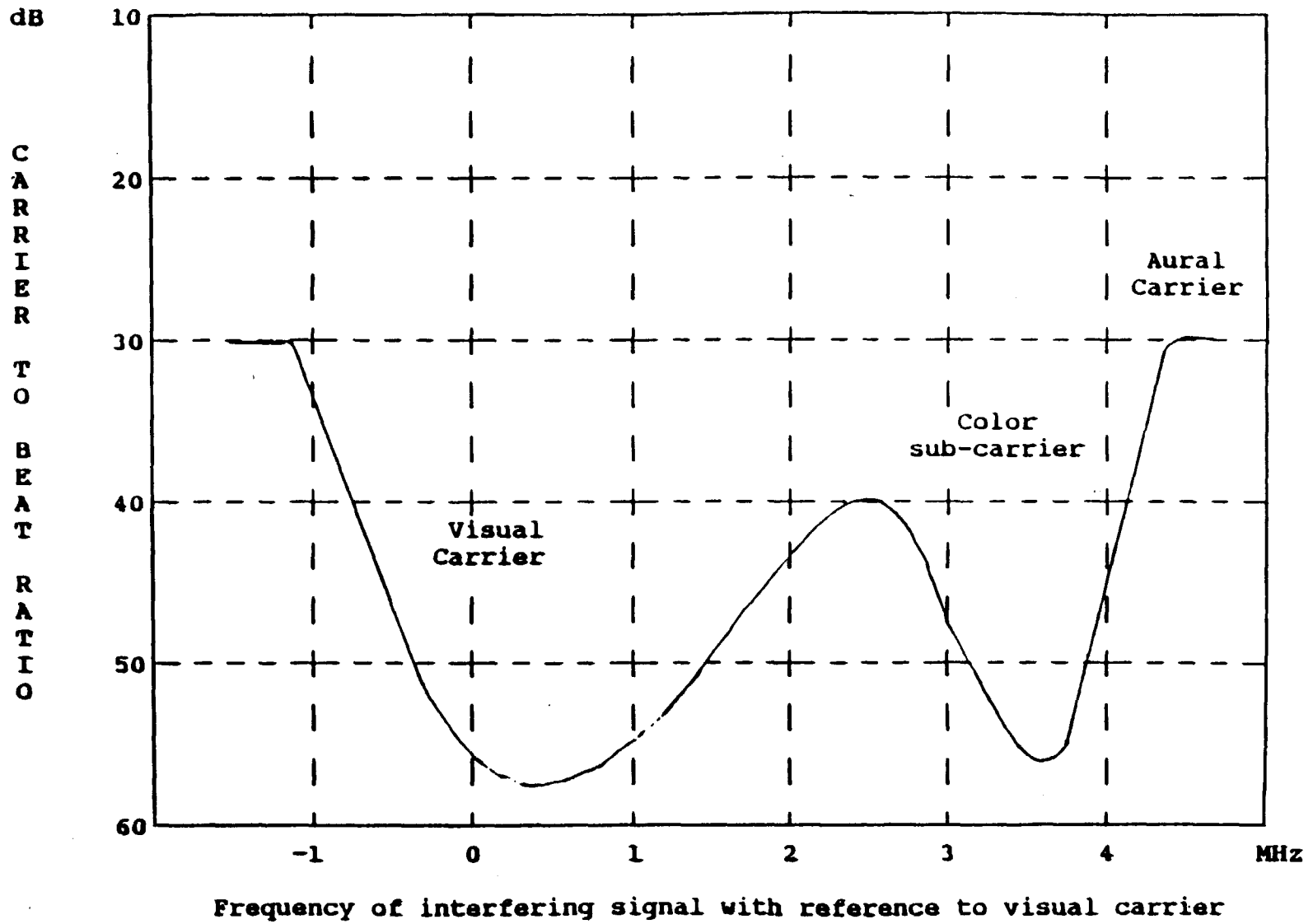

Figure 1.2 Permissible Limits for NTSC Minimum Carrier to Beat Ratio

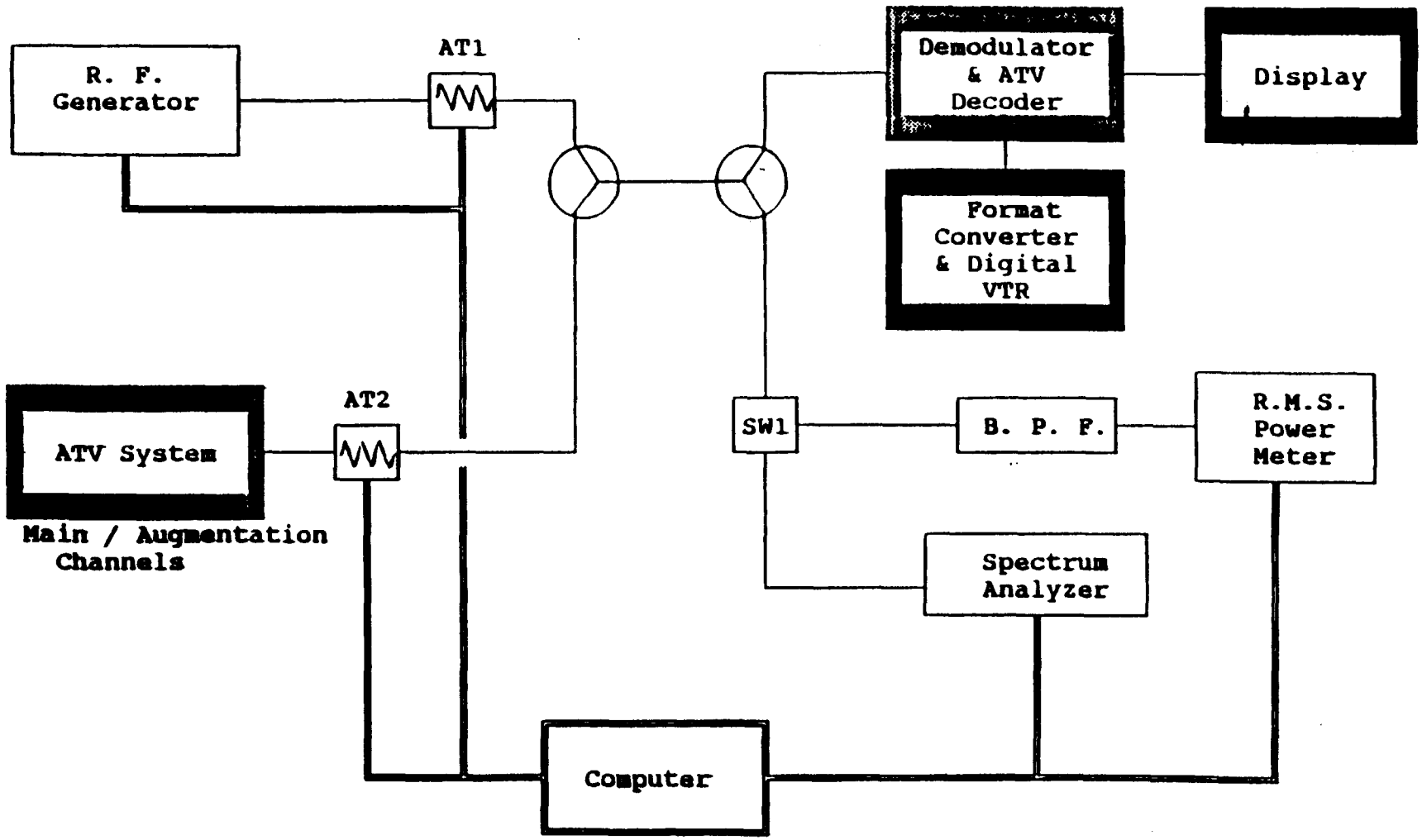

Figure 1.3 Discrete Frequency Interference Test Equipment Setup Block Diagram.

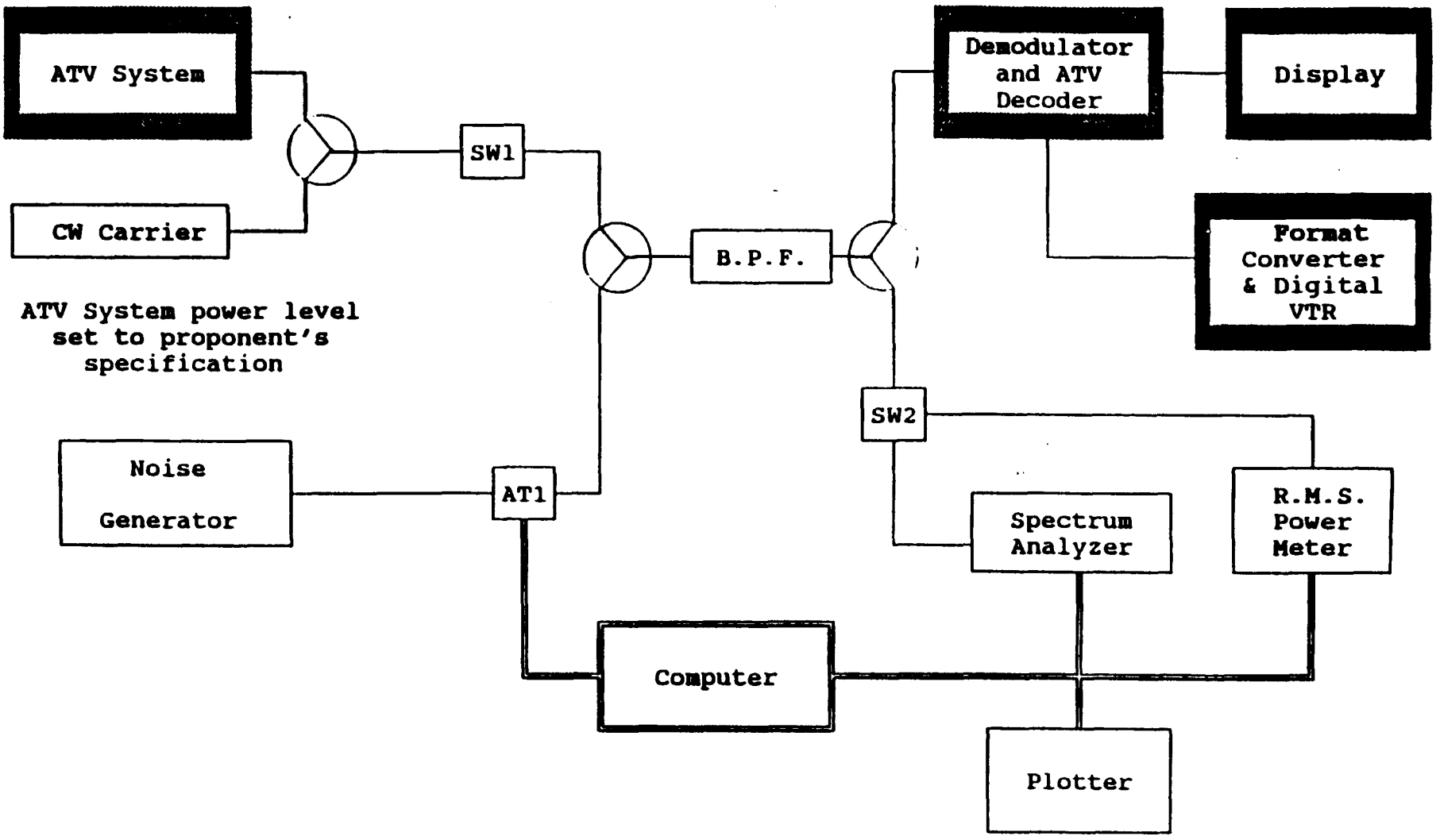

Figure 2.1 Minimum Carrier-to-Noise Requirement Test Equipment Setup Diagram.

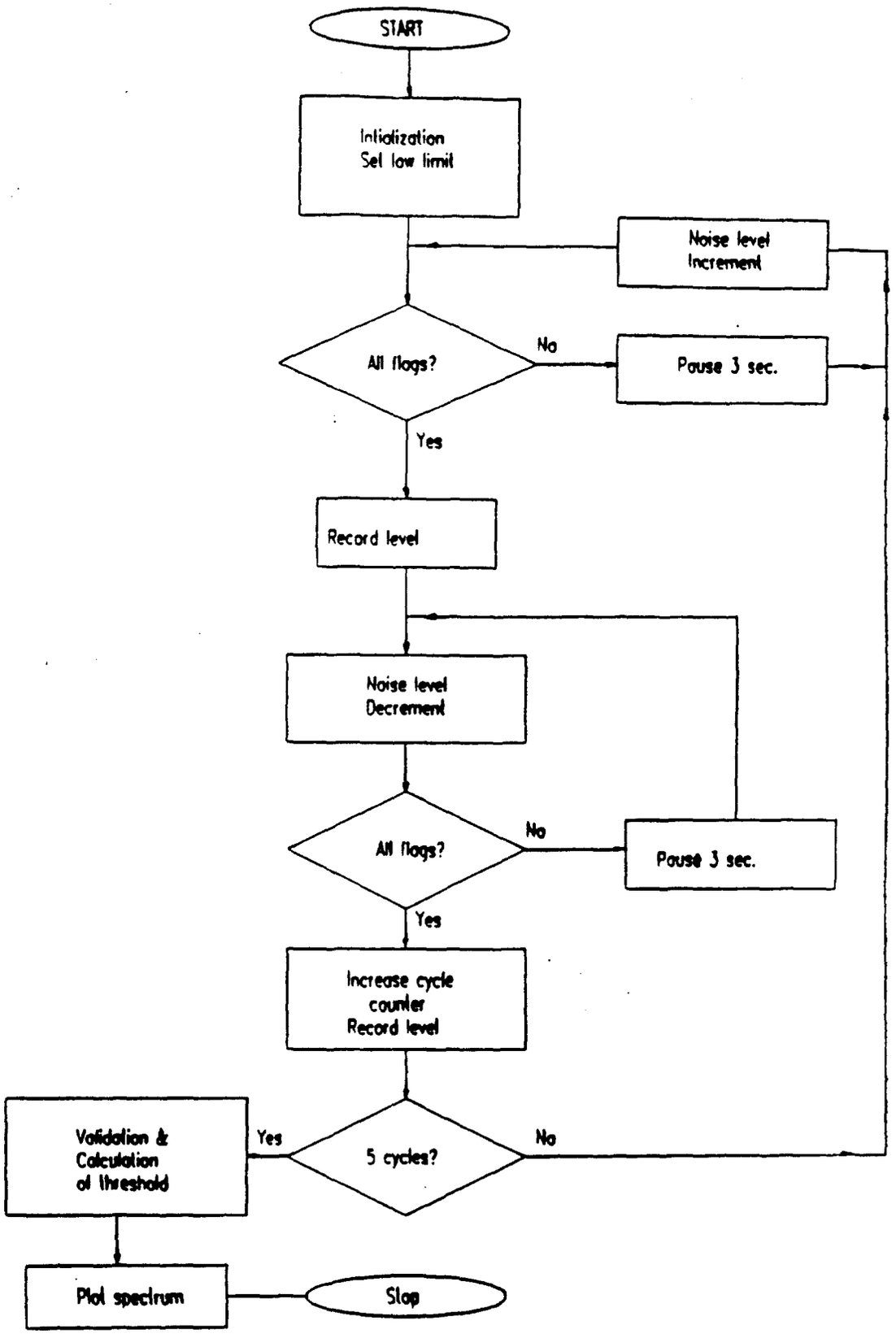

Figure 2.2 Minimum Carrier-to-Noise Requirement Flow Chart

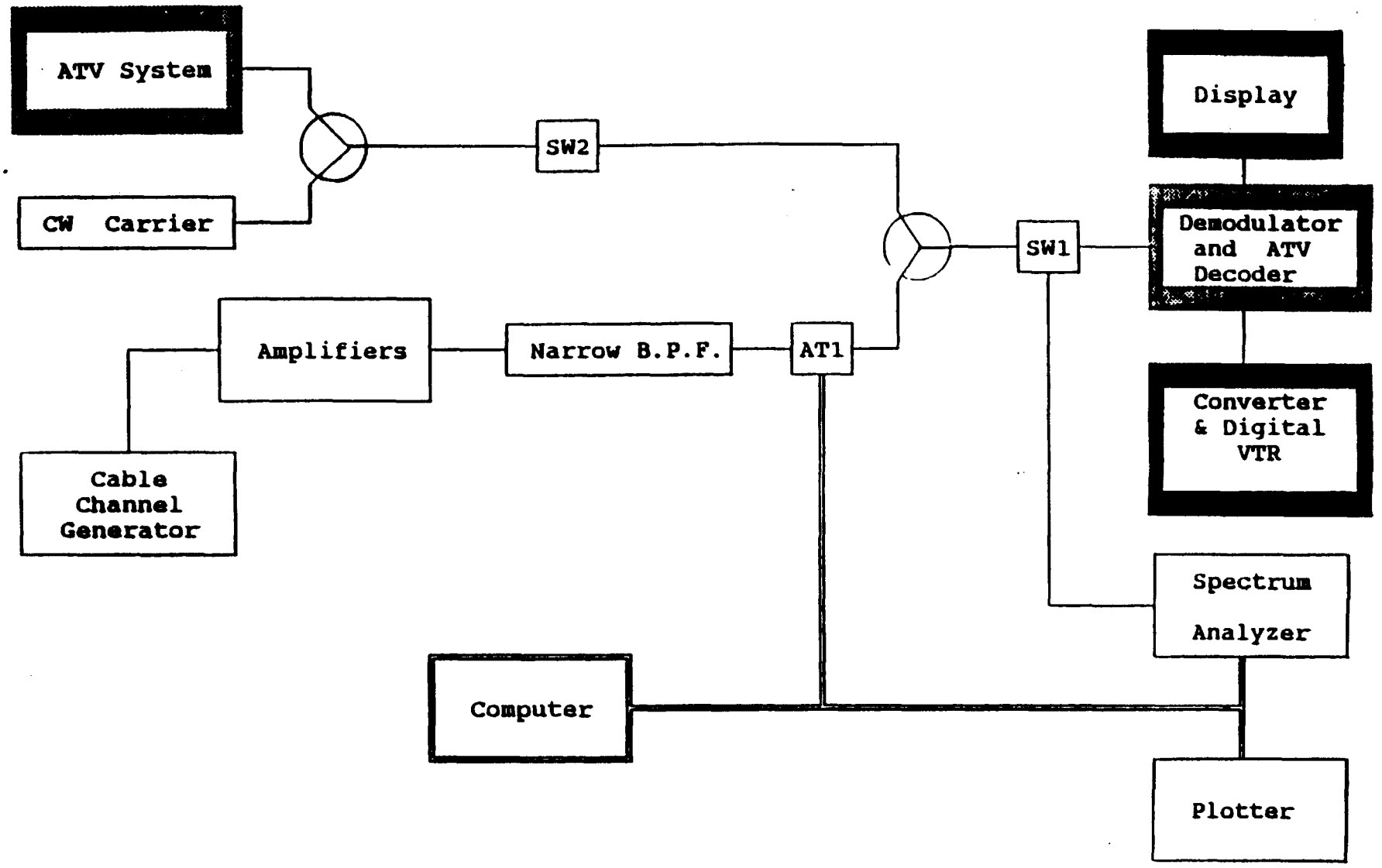

Figure 3.1 Intermodulation Distortion Test Equipment Setup Block Diagram.

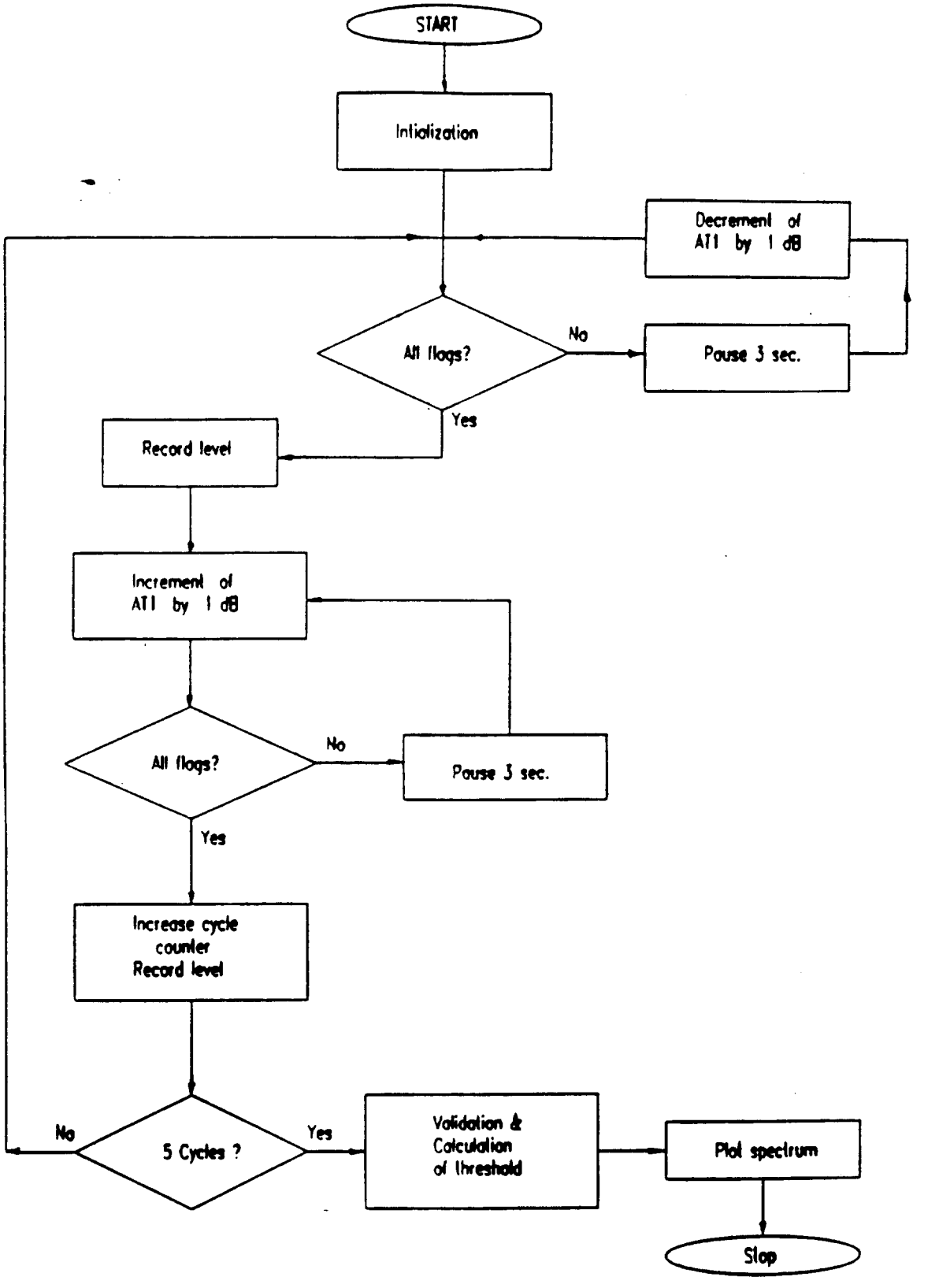

Figure 3.2 Intermodulation Distortion Flow Chart

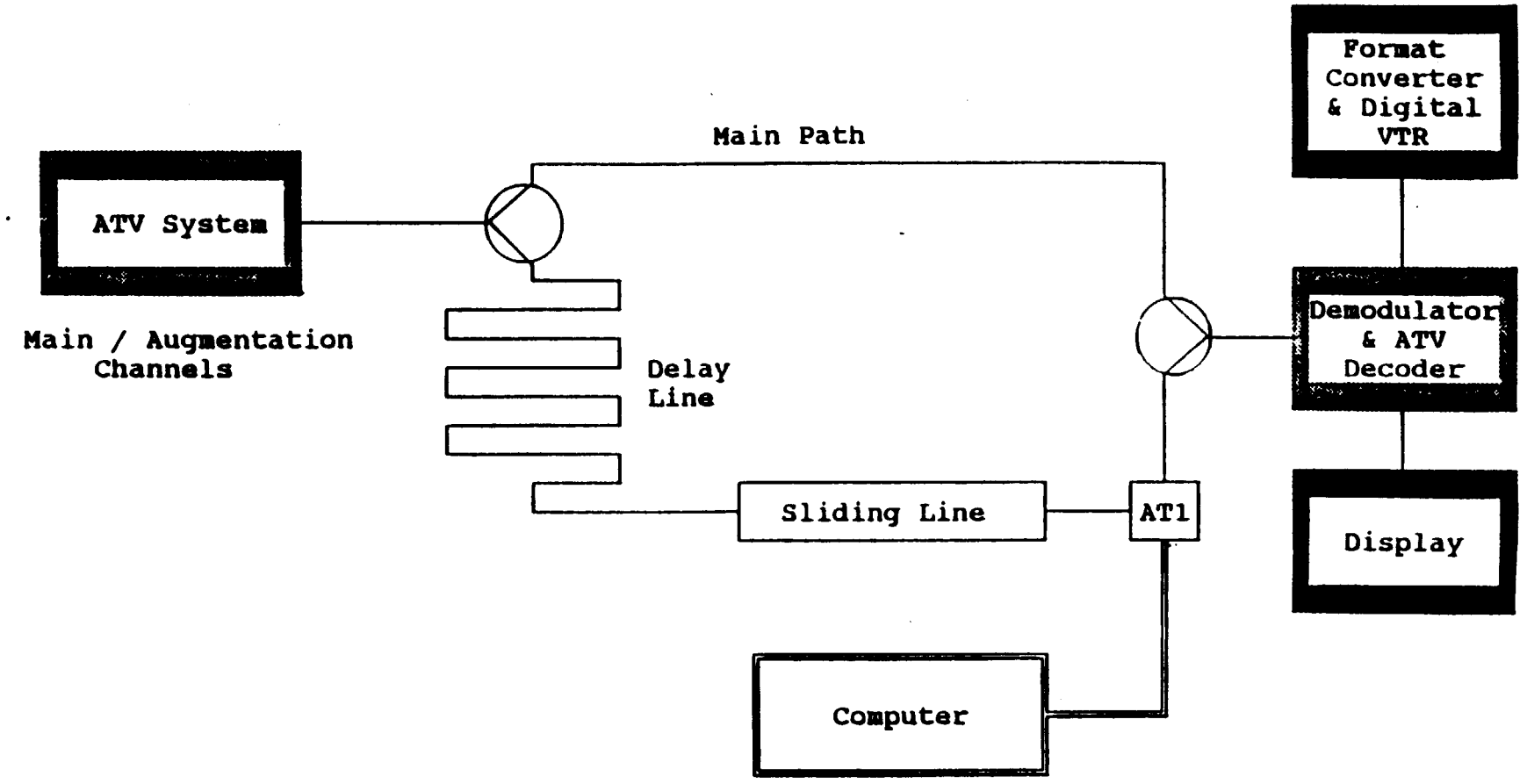

Figure 4.1 Effect of Microreflection Test Equipment Setup Block Diagram.

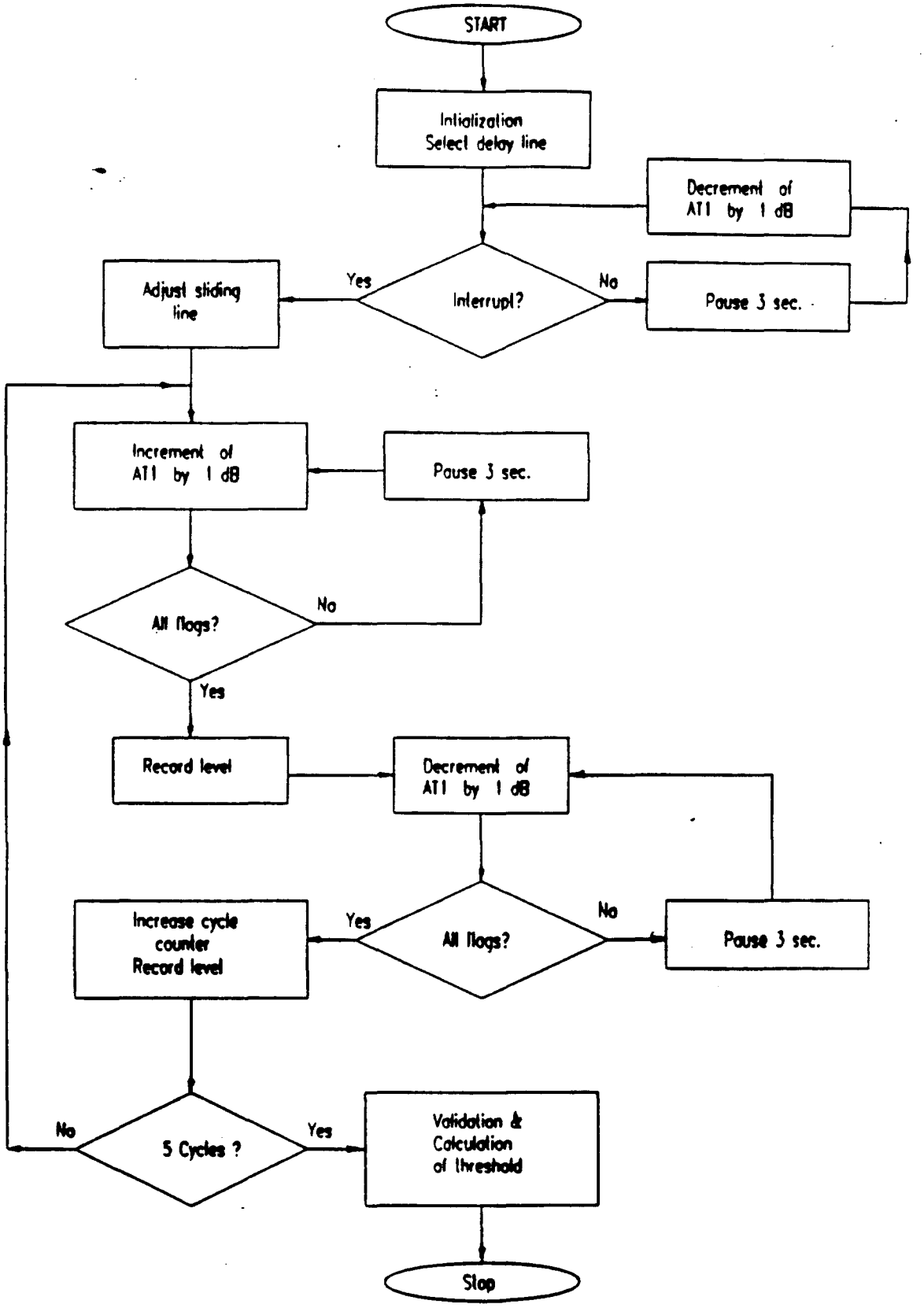

Figure 4.2 Effect of Microreflection Flow Chart

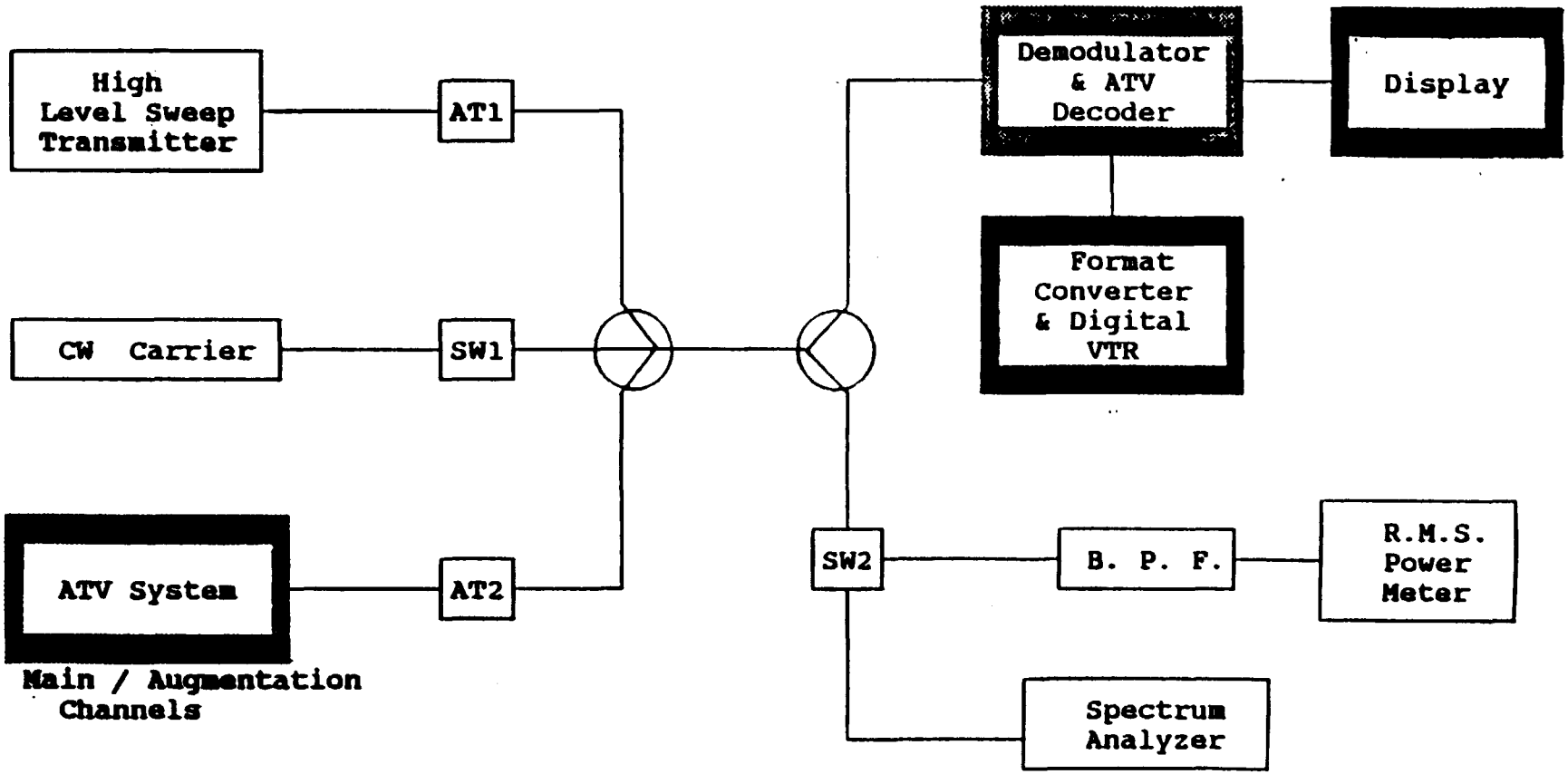

Figure 5.1 Effect of High Level Sweep Test Equipment Setup Block Diagram.

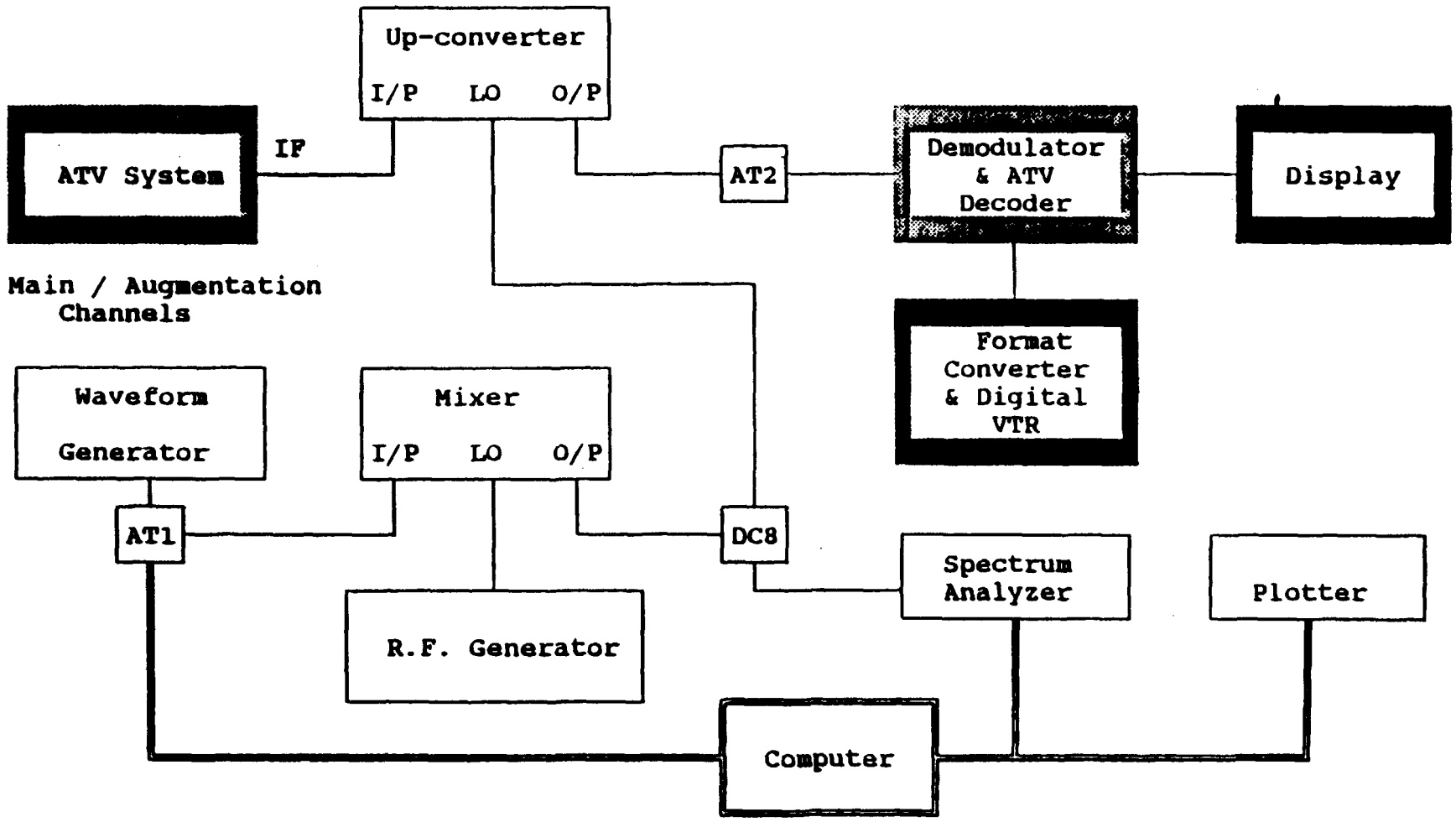

Figure 6.1 Hum and Low Frequency Noise Equipment Setup Block Diagram.