Guy Beatley

Stellacom Inc.
Advanced Television Support Group
1901 N. Moore Arlington VA 22209
703-243-1695 (Fax 1698)

Ed Horowitz

Viacom Int.
1515 ~~Broadway~~
New York NY
212 258 6324
258 6315 (Fax)

JEFF KRAUSS

Consultant to
General Instrument Corp
Suite 450
15201 Shady Grove Rd
Rockville MD 20850
301-258-8164
fax 301-977-6330

RONALD J. GNIDZIE - JKC

(C. Jablonski and M. Meaney can be deleted from the membership list.)

NATIONAL BROADCASTING CO
30 Rockefeller Plaza Room 1600N
New York, NY 10112
(212) 664-3153
FAX- (212) 581-6687

FCC ADVISORY COMMITTEE ON ADVANCED TELEVISION

Planning Subcommittee

Working Party 4 -- Alternative Media Technology and Broadcast Interface

Chair - Ed Horowitz

==========

MEETING NOTICE PS/WP4-CC09

==========

PS/WP-4 will hold a meeting on Wednesday, March 6, 1991 from 10:00 a.m. to 12:30 pm at:

National Cable Television Association
Conference Room
1724 Massachusetts Ave.
Washington, D.C. 20036

* * * * * * * * * * * * * * *

AGENDA:

1. Progress report from representatives of:

EIA	NTIA	FCC
ATSC	NRC	NAB
NCTA	CABLE LABS	OTHERS
IEEE	ATTC	

2. Discussion and/or definition of "ATV Receiver" in context of alternative media.

3. Discussion of PS/WP-4 final report to FCC ACATS for 1992. (Draft outline attached)

3. Assignment of action items.

4. Other business

FCC ADVISORY COMMITTEE ON ADVANCED TELEVISION
Planning Subcommittee
Working Party 4 -- Alternative Media Technology and Broadcast Interface

MINUTES OF THE MEETING -- March 6, 1991

Draft March 8, 1991

Working Party 4, Alternative Media Technology and Broadcast Interface (PS/WP-4) met in Washington, D.C. on Wednesday, March 6, 1991 at the NCTA. The Chairman Ed Horowitz presided over the meeting, Virgil Conanan served as secretary.

1. Ed Horowitz opened the meeting at 10:30 AM with an introduction of those present, and then he briefly reviewed PS/WP-4's previous work.

2. Regarding the first agenda item, Virgil Conanan reported on the ATSC specialist groups that work on topics concerning alternative media.

> Interoperability and Consumer Product Interface specialist group, (T3S2 headed by B. Lechner) has been studying interoperability of ATV signals with cable, satellite, broadcast, VCR, and other media. Last November, in the ATSC T3 meeting, they reported that there is no clear definition of the term "baseband" and that they welcome contributions from other parties such as PS/WP-4.
>
> T3S3 -- The Specialist Group on Digital Services (G. Stubbs) has identified various features for "conditional access" but several parties objected to their proposal to standardize the features. The opposition stated that standardization would limit flexibility in implementation. Choosing features for conditional access is quite complex because it is usually driven by a combination of many business and technical factors. Don McMillan of CRC added that T3S3 is also studying interfacing of ATV with various ancillary services.

3. Reporting for Cable Labs, Ed Horowitz said that the simulated cable system at the ATTC is almost completed. Additional CATV passive devices such as taps and splitters are being integrated to simulate a "real life" condition and determine if resulting microreflections would be objectionable for ATV viewing. The installation of a CATV fiber optic trunk simulation is reportedly on schedule.

4. Don McMillan then reported for CRC: A dry-run of subjective test setup has been successfully completed; subjective test program sequence materials is being shot in New York; and, that the delivery of the Tektronix format converter has been delayed.

5. George Hanover said the EIA ATV Receiver Interface Subcommittee has completed a report. The group is currently studying if YUV input is more appropriate than Y/C as a

baseline baseband video input. The chairman suggested that PS/WP-4 continue monitoring the EIA's activities since both groups have similar goals.

6. Moving on to the "ATV Receiver" topic, Virgil Conanan explained why there is a need for PS/WP-4 to define this term. He said that at various FCC ACATS working parties and task forces as well as other groups working on interoperability and receiver interfacing, the terms "ATV receiver" and "baseband" have been used with ambiguous meanings. Also, the term "reference ATV receiver" need to be precisely defined since a terrestrial TV station's desired-to-undesired signal to noise ratio, (hence coverage) can either increase or decrease depending on the RF characteristics of the so-called reference ATV receiver.

7. Jeff Krauss said that the Planning Factors group is probably looking at these characteristics. George Hanover said it is important to define the reference receiver because ATV proponent systems will appear more favorable than others if "more advanced" receivers are used. Changes in receiver characteristics will determine the proponent system's ability to deal with taboos and co-channel interference.

8. Regarding the term "baseband", Larry Lockwood explained that any signal may be considered baseband so long as no "carrier" exists to carry that signal. Encoded signals such as composite NTSC, Y/C or YUV may be considered baseband even though the same signal includes ancillary for captioning, VITS or sound in the vertical or horizontal intervals. A completely digital signal carrying coded and compressed video, audio, ancillary data and error correction signals that is extracted from a demodulator is considered baseband. There was agreement on Larry's definition that "non-carrier" type signals may be considered baseband. For interoperability, or friendliness towards alternative media, it was agreed that interfacing among ATV equipment such as ATV VCR, ATV display, ATV satellite receiver, set top cable ATV converters and others would be simpler with "ATV baseband" signals, according to the above definition.

9. In the discussions, it became apparent that the traditional definition of "TV receiver" is no longer valid for ATV, especially for spectrum planning purposes. RF characteristics such as tuner noise figure, bandwidth, shape factor and image rejection are the dominant factors that affect signal coverage. It was agreed that defining the appropriate values for these factors is not the responsibility of PS/WP-4.

10. Having separated the tuner requirements, PS/WP-4 proceeded to define another block following the ATV tuner section, which is the Interface Processor.

> An <u>Interface Processor</u> is a device that accepts non-carrier protocol(s) such that information can be extracted and/or manipulated for subsequent display.

11. Bill Pohts suggested that information from previous discussions PS/WP-4 can also be used to define the ATV receiver in the context of alternative media. Hence:

An ATV receiver consists of a tuner/demodulator which yields non-carrier protocol(s) to an interface processor and a display. The ATV receiver is capable of accepting non-carrier signals at interface points, and operates in the visual, aural and ancillary domains.

12. PS/WP-4 agreed on the basic elements comprising an ATV receiver as shown below. The ATV RECEIVER's tuner, interface processor and display is accessible to any of the alternative media such as cable, satellite and recorded media.

BASIC ELEMENTS OF AN ATV RECEIVER

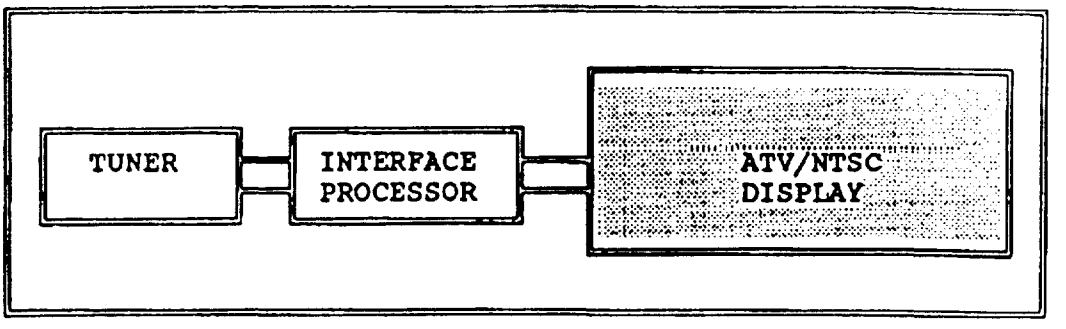

Communication with the ATV receiver's Interface Processor does not necessarily imply physical means, such as connectors or cables. For example, commands can be downloaded via one ATV channel and demodulated by the tuner. The group envisioned several ways to physically interface with the ATV receiver:

1) by means of cables and connectors containing unintelligible baseband (non-carrier) signals. Examples of these signals are scrambled analog signals or compressed digital data.
2) by means of standard cables and connectors containing intelligible baseband signals that can directly drive the display apparatus. Examples of these signals are RGB, YUV, Y/C and other standard composite baseband video signals.

Maximum interfacing flexibility is desired because it is conceivable that alternative media would have many different signal formats that need to interface with the consumer's ATV receiver.

13. The discussion of PS/WP-4 final report to FCC ACATS for 1992 was deferred until the next meeting.

14. Ed Horowitz will submit a report to the Planning Subcommittee for the ACATS fourth interim report by Friday, March 8, 1991.

15. As action items, the chairman said the group would continue monitoring the activities of other FCC working parties and industry groups and report them accordingly.

16. On other business, Virgil Conanan announced that another SS/WP-1 "Hell Week" is scheduled on March 20-22 to pre-certify digital systems by MIT-ATVA, ZENITH-AT&T, ATRC and NHK's Narrow MUSE. The meeting adjourned at 1:00 PM.

WP 4 - PSS

March 6 1991

PS/WP4-0072

Name	Company	Tel	Fax
James G. Ennis	Fletcher, Heald & Hildreth	(202)828-5700	x5786
JEFF KRAUSS	Consultant to General Instrument	301-309-3703	301-309-9323
BILL POHTS	Consulting Eng	703-360-7193	360-0309
Harry W. Thibedeau	SBCA	703/549-6990	549-7240
Lawrence W. Lockwood	Tele Resources	(703) 920-3795	
Alan Stillwell	FCC	(202) 653-8162	(202)653-8773
VIRGIL CONANAN	HBO	212-512-5309	212-512-5598
Bill Lamb	ESPN	203-585-2300	
Chuck Pagano	ESPN	203-585-2286	~~203-585-2506~~ 203-585-2506
Ed Horowitz	Viacom	212 2586327	212 2586319
DON MARC MARLAN	CRC Ottawa	613-990-4123 -998-2556 Secretary	993-9750
George Hanover	EIA	202 457 4975	4985

PS/PW4-0066

PHILIPS

Philips Laboratories - Briarcliff

March 21, 1990

To: Members of ATSC Specialists Group on Interoperability and Consumer Product Interface - T3/S2

Subject: EIA ATV Multiport Receiver Subcommittee Phase I Activities Summary Report

Enclosed is the latest version of Phase I Activities Summary Report of the EIA ATV Multiport Receiver Subcommittee, as requested at the last meeting of T3/S2. I hope that you will find the information in the report useful for the April 19 joint meeting both as a progress report and as background for discussing current subjects.

Eugene Lubchenko

Tel: 914 945-6317
Fax: 914 945-6375

Hold for 6/12 mtg!

RECEIVED

MAR 29 1990

E. HOROWITZ

Philips Laboratories
North American Philips Corporation

Telephone: (914) 945-6000

Electronic Industries Association

EIA ATV MULTIPORT RECEIVER SUBCOMMITTEE

PHASE I ACTIVITIES

-- SUMMARY REPORT --

Co-chairmen:

Joseph Donahue
Senior Vice President
Technology and Business Dev.
Thomson Consumer Electronics

Arpad Toth
Chief Scientist
ATV Technology Planning
Philips Laboratories

February 1990

2001 Eye Street, N.W. · Washington, D.C. 20006 · (202) 457-4900 · TWX: 710-822-0148

TABLE OF CONTENTS

EXECUTIVE SUMMARY

1. INTRODUCTION

2. ATV SYSTEM ARCHITECTURE

3. ATV MULTIPORT RECEIVING SYSTEM ARCHITECTURE

4. HIERARCHICAL ATV MULTIPORT RECEIVER INTERFACES

5. DIGITAL ATV RECEIVING SYSTEM EVOLUTION

6. OBJECTIVES AND PROPOSED MILESTONES FOR THE NEXT STUDY PHASE

ACKNOWLEDGEMENT

EXECUTIVE SUMMARY

The need for multi-media interoperability between NTSC and new Advanced Television (ATV) signals in the home was recognized as a key need by the EIA Advanced Television Committee. An EIA ATV Multiport Receiver Subcommittee was formed to address the interoperability issue through the use of receiver multiports. The subcommittee's charter is to define the external receiver interfaces required to economically and functionally interface with the respective NTSC and ATV services of the future.

Phase I activities of the subcommittee have been completed. The committee first prepared a "generic" model of a TV receiving system wherein the basic structure of receivers and monitors, and the potential physical interface points were defined.

Using the generic model, the committee has proceeded to structure a hierarchical family of receiver/monitor interfaces which will satisfy a range of modes from the very simplest requirement of a conventional NTSC receiver to NTSC/ATV receivers with baseband inputs involving conditional access and signals of analog or digital format. The receiver manufacturer will determine what level of standardized interfaces to use with each receiver model.

The hierarchical family of ATV multiports will have the following characteristics.

---

1. Analog Minimum Service NTSC/ATV Receiver/Monitor
   * NTSC/ATV RF input port
   * NTSC/ATV video and audio ports
   * Optional other standard ports

2. Analog Extended Service NTSC/ATV Receiver/Monitor
   * NTSC/ATV RF input port
   * NTSC/ATV video and audio ports
   * Conditional access port
   * Optional other standard ports

3. Digital Extended Service NTSC/ATV Receiver/Monitor
   * NTSC/ATV RF input port (analog)
   * NTSC/ATV video and audio ports (analog)
   * Digital ports
   * Optional other standard ports (analog or digital)
   * Optional conditional access port

This multiport structure will provide receiver manufacturers, television service providers over alternate media, and consumers with standardized interfaces that will economically serve their needs at all desired levels of performance and complexity.

The formulation of the concept of the basic hierarchical family of ATV receiver interfaces completes Phase I of the EIA ATV Multiport Receiver Subcommittee efforts. Phase II will now address the further structuring of the specific interfaces of multiports. While completion of Phase III involving the detailed interface specifications must await the selection and definition of the ATV delivery system standards, standardization organizational activities can proceed in parallel with this work.

All parties are welcome to participate in the ATV Multiport Standards process. Copies of the "Generic Receiver" and Phase I reports can be obtained from the EIA.

1. INTRODUCTION

During its first phase, the EIA ATV Multiport Receiver Subcommittee studied in detail the methods of standardizing ATV receiving system interfaces. Analog and digital delivery channels and their interoperability with NTSC and ATV receiving systems were investigated. It was concluded that a generic model for the ATV receiving system was important to define first. This model could serve as the basis for the definition of ATV receiver interoperability including functional and physical requirements in a multi-media environment. The "Reference Points" of the generic system model were identified to provide a consistent means to define the ATV receiving system physical interfaces. The group agreed that specific physical and electrical interface standards of an ATV receiver can be finalized once emission standards have been established. The group accomplished the classification of NTSC, ATV receivers/monitors and other video terminals, and the generation of a list of attributes for video, audio and data information channels.

The working group agreed on the following assumptions as boundary conditions of the ATV multiport studies:

* All ATV receivers will be NTSC signal compatible.

* The selected ATV signal for alternate media (e.g., cable, satellite, fiber optics, prerecorded media) could be different from the signal of the ATV terrestrial broadcast.

* ATV signal over the telephone company fiber optic Broadband Integrated Services Digital Network (B-ISDN) will be in digital format in the longer term.

* Maximum baseband video signal parameter commonality among the signals of alternate media is an important consideration for minimum cost solution and minimum signal degradation during format conversions in the emission and consumer environments.

* Basic Video and Audio signal attributes of the ATV receiver will depend on the established ATV standard(s).

* Full definition of the ATV receiver interface, control, conditional access, and data handling capabilities is necessary. The group assumed that conditional access may be provided by both external and internal hardware relative to the ATV receiver. The receiver should have a standard interface for the interconnection of the external conditional access hardware.

* Standardization of any alternate media ATV emission signal does not imply that such standard need to be implemented in any ATV consumer product or system. If the receiver is to receive any of the ATV alternate signals however, and is claimed to be in compliance with the EIA ATV multiport television interface standard, then the receiver interface must have the characteristics required by the EIA ATV multiport television interface standard.

* The EIA/ANSI 563 NTSC television interface standard can be a useful benchmark for the definition of ATV receiver multiport interface requirements.

2. ATV SYSTEM ARCHITECTURE

Figure 2.1 identifies building blocks of the ATV system and their functional interfaces. According to this diagram, the ATV system can be subdivided in the following modules: program production and TV studio, emission environment including feeder and distribution systems, and consumer equipment. These modules are interconnected via the following Reference Points:

* Ultimate Single Worldwide HDTV Production Signal: HDP-W (Reference Point "A")

* North American HDTV Production Signal: HDP-NA (Reference Point "B")

* North American HDTV Emission Signal: HDE-NA (Reference Point "C")

* ATV Feeder Signals (Reference Point "D")

* ATV Distribution Signals (Reference Point "E")

* ATV Receiver Multiports (Ports "E.1", "E.2" ..... "E.n"):

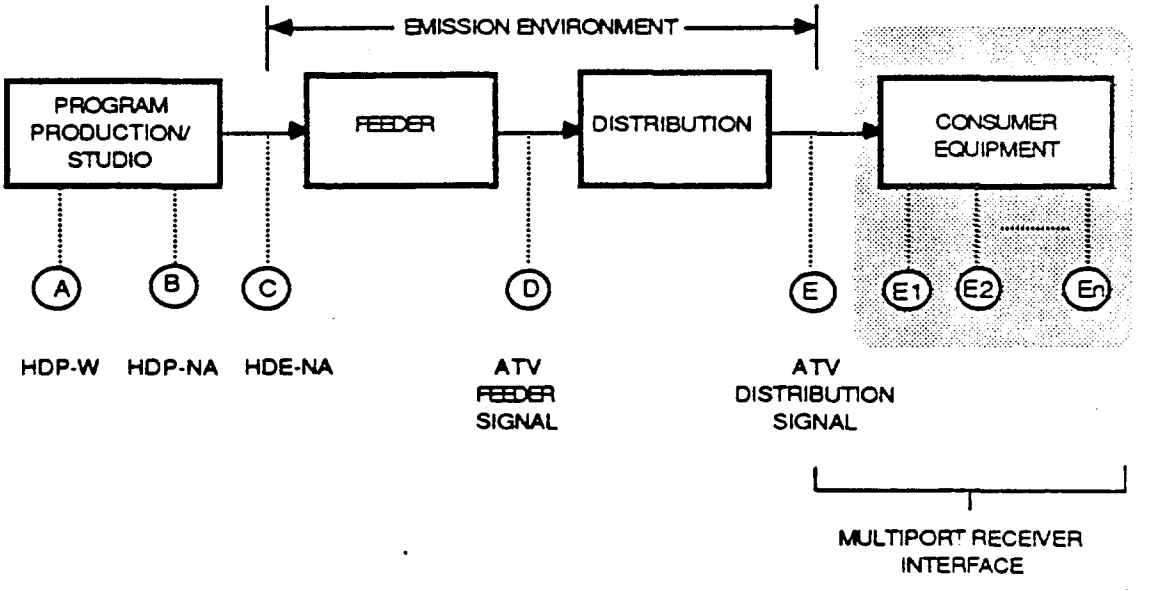

Figure 2.1: Generic ATV System Block Diagram

The primary focus of the ATV Multiport Receiver Subcommittee is to study the ATV consumer equipment and its E1, E2....En interfaces.

3. ATV MULTIPORT RECEIVING SYSTEM ARCHITECTURE

Today's NTSC consumer terminals provide satisfactory interconnection by the use of the RF interface. However, TV signal interoperability at the RF level is not without signal degradation. In particular, in the high quality environment of ATV services and devices, the need exists for degradation-free interconnection.

Interface for conditional access provisioning can be satisfied by the EIA/ANSI-563 multiport NTSC receiver standard. This multiport standard also permits the interconnection of devices at the baseband video and sound signal levels. This standard was introduced in early 1989.

The EIA and its member organizations promoted the idea of extending the EIA/ANSI-563 multiport concept to ATV consumer devices and applications such that interconnection can take place without video and sound services degradation.

An ATV multiport receiver (MR) is shown in Figure 3.1. The input and output interfaces of the ATV receiver would allow maximum user flexibility for the interconnection. However, the baseband video parameters would be common for all applications resulting in a single set of display parameters. This solution provides a cost-effective approach to many ATV consumer applications. Study of the MR architecture and interface requirements for both analog and digital emission environments is well under way within the EIA.

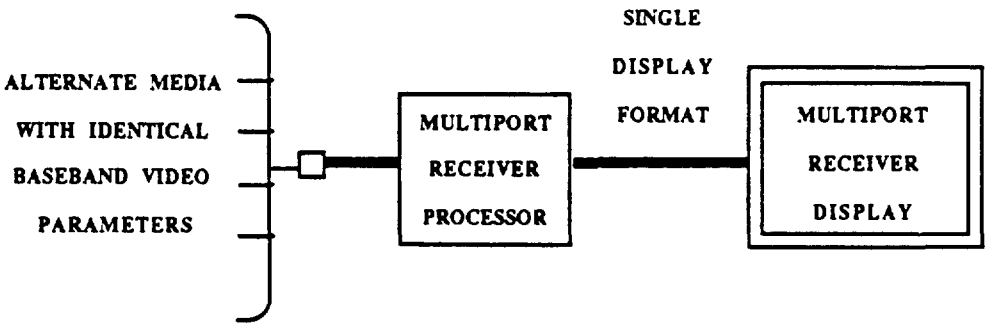

Figure 3.1: ATV Multiport Receiving System

In the ATV world, the multiport interface will provide the solution for high quality interoperability of consumer television receiving devices. The subcommittee outlined the following desirable ATV multiport receiver interoperability characteristics:

* Multiple tuner/decoding functions to receive signals from alternate ATV media.

* User equipment interconnection (analog and digital) at multiple interface points to reach maximum flexibility and maximum service quality.

* The ATV receiver may either be equipped with decryption hardware to decode the service signals in an intelligible manner or be able to interconnect with an external signal decryption device for this purpose.

* Implementation of user-friendly local control features is up to the consumer equipment manufacturer (e.g., remote controller). However, end-to-end control functions and emission network-to-consumer equipment control signals should be standardized.

To implement the interoperability characteristics listed above, an ATV consumer receiver, monitor or receiver/monitor should be equipped with a multiport interface as shown in Figure 3.2.

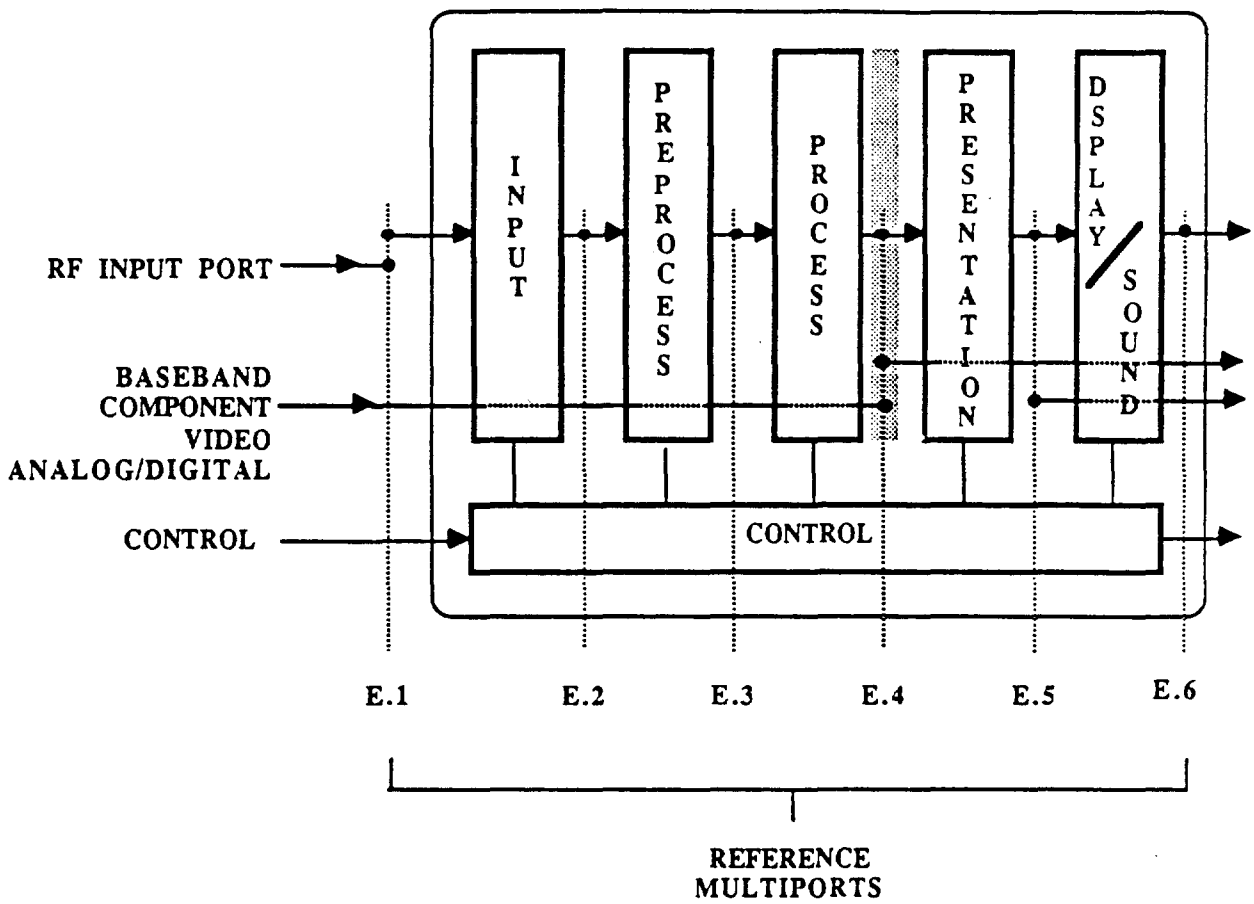

Figure 3.2: ATV Receiving System Architecture with a Multiport Interface

The definition of E.1 through E.6 Reference Ports are as follows.

E.1: Input Port -- Reference Port for all signals entering the ATV receiving system

E.6: Output Port -- Reference Port for all signals exiting the ATV receiving system

E.2-E.5: Internal functional ports which may be exposed as standard external physical ports -- Reference Ports E.1 or E.6

Note: Reference Port E.4 is defined as the baseband component video and baseband sound information port. The signal presented here is descrambled and ready to interface directly with another ATV receiving system at its equivalent E.4 port.

4. HIERARCHICAL ATV MULTIPORT RECEIVER INTERFACES

Figure 4.1.A through 4.1.C illustrates the possible configurations of the NTSC/ATV multiport receiving system interface according to the following classes of ATV consumer equipment.

---

1. Analog Minimum Service NTSC/ATV Receiver/Monitor (Figure 4.1.A)
   * NTSC/ATV RF input port
   * NTSC/ATV video and audio ports
   * Optional other standard ports

2. Analog Extended Service NTSC/ATV Receiver/Monitor (Figure 4.1.B)
   * NTSC/ATV RF input port
   * NTSC/ATV video and audio ports
   * Conditional access port
   * Optional other standard ports

3. Digital Extended Service NTSC/ATV Receiver/Monitor (Figure 4.1.C)
   * NTSC/ATV RF input port (analog)
   * NTSC/ATV video and audio ports (analog)
   * Digital ports
   * Optional other standard ports (analog or digital)
   * Optional conditional access port

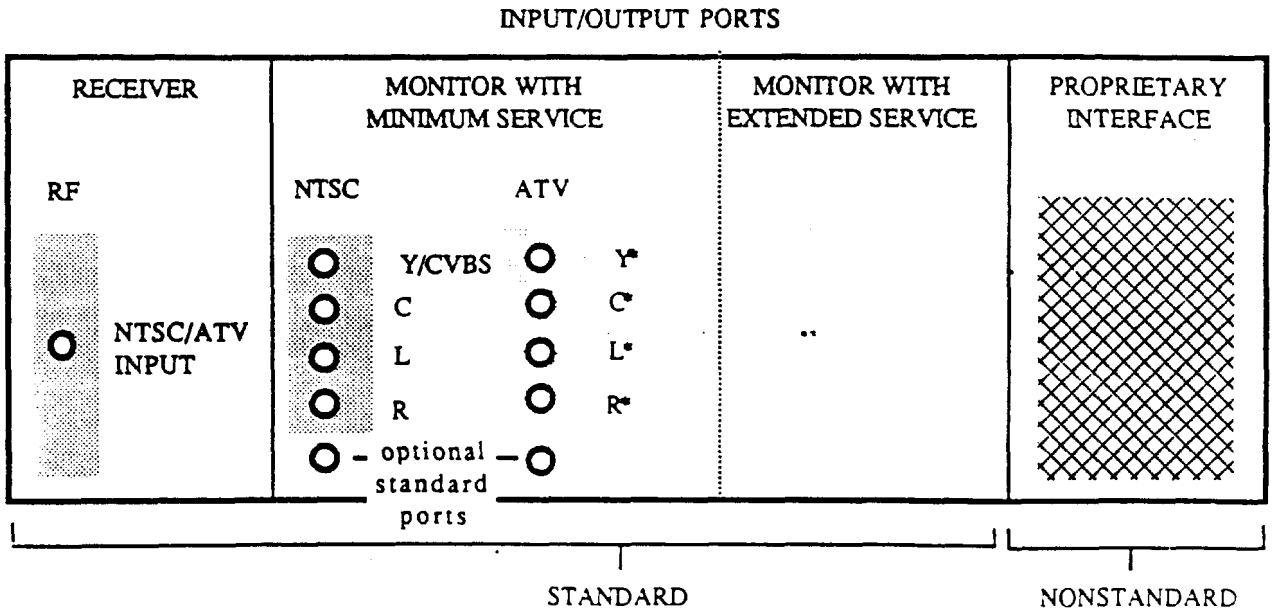

Figure 4.1.A: Minimum Service NTSC/ATV Receiver/Monitor

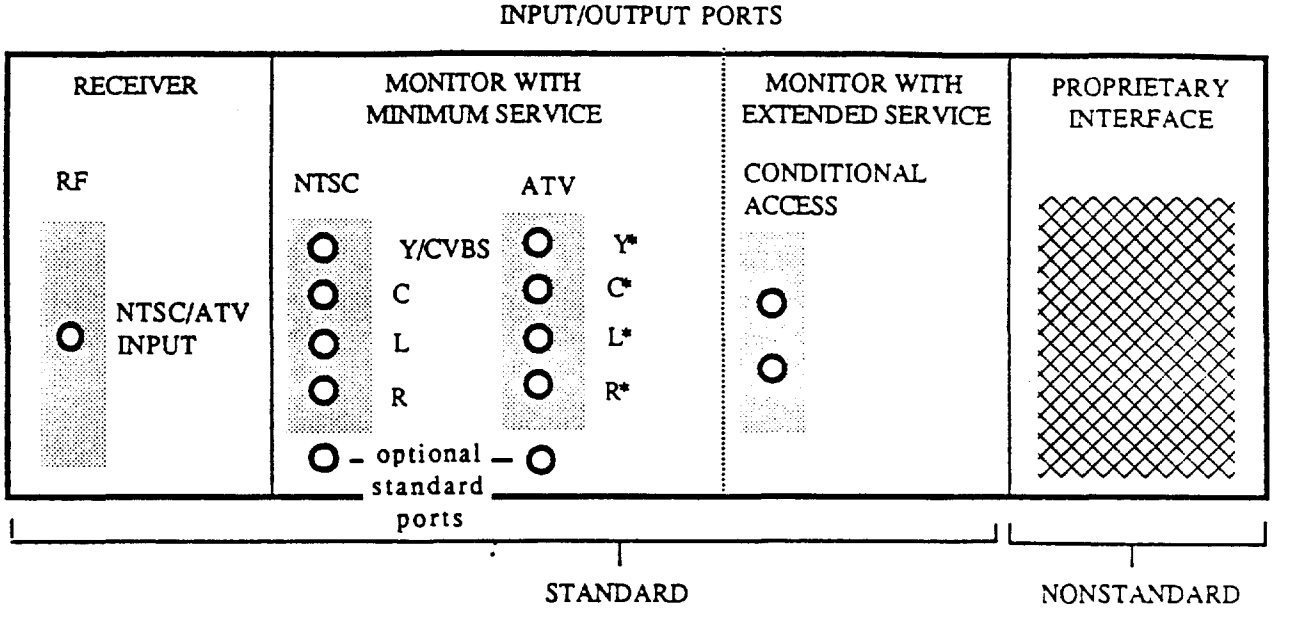

Figure 4.1.B: Extended Service NTSC/ATV Receiver/Monitor

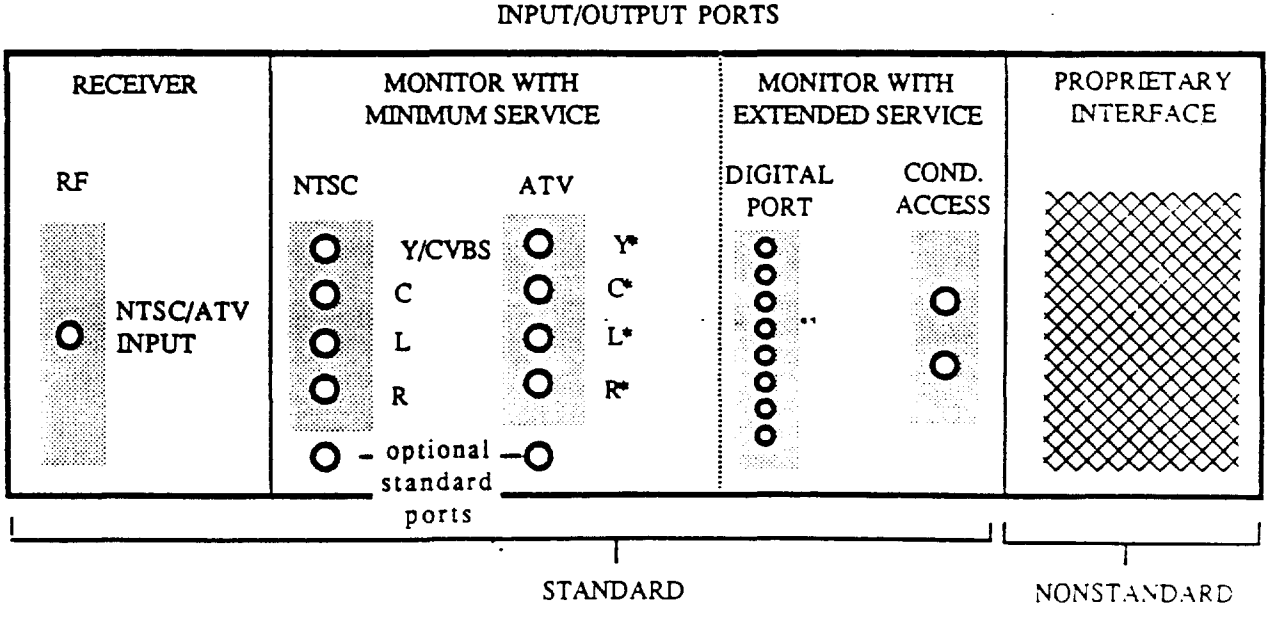

Figure 4.1.C: Digital Extended Service NTSC/ATV Receiver/Monitor

As illustrated by the diagrams, the multiport receiver will have the following physical interfaces:

---

* Minimum Service NTSC/ATV Receiver/Monitor

  • Standard NTSC/ATV - RF inteface

  • Standard Interface - Baseband NTSC composite (CVBS) or Y component for S-VHS compatibility
  - Baseband NTSC C component for S-VHS compatibility
  - Baseband ATV Y component
  - Baseband ATV C component
  - NTSC Audio LEFT and RIGHT
  - ATV Audio LEFT and RIGHT

---

* Extended Service NTSC/ATV Receiver/Monitor:

  •As in Minimum Service NTSC/ATV Receiver/Monitor plus

  • Standard Interface - Conditional Access Interface

---

* Digital Extended Service NTSC/ATV Receiver/Monitor

  •As in Minimum Service NTSC/ATV Receiver/Monitor plus

  •Standard Interface - Digital Port
  - Optional Conditional Access Interface

---

* Nonstandard Ports: - Any (manufacturer's choice)

5. DIGITAL ATV RECEIVING SYSTEM EVOLUTION

In the "broadband digital world," the opportunity exists that TV sets may evolve to intelligent, multi-media, multi-service digital terminals. Despite this trend, there will always be the mass demand for application-specific single purpose consumer devices. It is highly unlikely that all TV receivers of the future will be built like a workstation, and similarly, a desk-top workstation will not be built like a "living room entertainment device". What is essential to recognize, however, is that the building blocks of both systems such as displays and VLSI will have much commonality and that these components will find application in multiple terminals.

Both home and office applications of CDV, CD-ROM, CDI, DAT and D-VCR technologies should be anticipated because of their expected attractive features and costs. Similarly, semiconductor techniques designed for digital ATV receiver signal processing and storage will find their way into office/business products. The cross-impact of consumer ATV receiving systems and office terminals will be considerable.

In some cases, video will be transmitted to consumer premises simultaneously with other information services (e.g., Broadband-Integrated Services Digital Network). In the B-ISDN environment, the segregation of the functional and physical elements of the in-home communication and video electronics, including the Network Termination (NT) module, the Terminal Adaptor (TA) and user terminals, requires joint attention by consumer TV equipment manufacturers, telcos and telecommunication equipment suppliers. The EIA ATV Multiport Subcommittee has taken the initiative for such joint studies. A Workshop on Digital ATV Services and Systems was organized in November 1989 and the subcommittee has formed a Study Group on Digital ATV Multiport Receiving Systems.

6. OBJECTIVES AND PROPOSED MILESTONES FOR THE NEXT STUDY PHASE

The working group identified the study objectives for its next phase as follows:

* Definition of analog multiport ATV receiver interface
* Study of digital broadband/video access techniques
* Definition of digital ATV multiport interface in the B-ISDN and other digital network environments
* Analysis of digital ATV-VCR coding and interface requirements
* ATV receiving system control requirements
* ATV receiving system baseband parameter standard

The proposed main milestones in the 1990-94 study period are the following:

* Generic ATV receiver model (Phase I)	Report	Complete
* Analog ATV multiport definition	Report	2-3Q 1990
* Digital ATV multiport interface requirements		4Q 1990
* Digital ATV multiport definition	Report	1H 1991
* Control and data requirements		1H 1991
* ATV receiver parameter standard (after ATV emission system standards)		2H 1992
* Analog ATV Multiport Standards Document (after ATV emission system standards)	Final Report	1H 1993
* Digital ATV Multiport Standards Document (after ATV emission system standards)	Final Report	1H 1994

ACKNOWLEDGEMENTS

The authors wish to acknowledge the dedicated work of the EIA ATV Multiport Receiver Subcommittee members. The data included in this summary report and the working group's Phase I report was generated by the following individuals:

A. Toth (co-chairman)	Philips
J. Donahue (co-chairman)	Thomson
J. Bellisio	Bellcore
H. Berge	TIA
W. Beriont	GTE Labs.
C. Bowick	Scientific-Atlanta
G. Dobbin	CRC Dept of Communications, Canada
L. Claudy	NAB
J. Goell	PCO
G. Hanover	EIA
G. Hartwick	Bellcore
J. Hofmann	Panasonic Technologies
B. James	NCTA
H. Kawaguchi	JVC
R. Keeler	A&T Bell Labs
W. Lagoni	Thomson
C. Lundgren	Bellcore
E. Lubchenko	Philips
W. Miller	Philips
T. Mock	EIA
J. Tanaka	JVC
S. Walker	GTE Labs.
J. Waltrich	General Instruments
D. Wachob	General Instruments
C. White	General Instruments
K. Yamashita	Hitachi
S. Yasuda	Toshiba

ONE HUNDRED FIRST CONGRESS
SECOND SESSION

EDWARD J. MARKEY, MASSACHUSETTS, CHAIRMAN

AL SWIFT, WASHINGTON
CARDISS COLLINS, ILLINOIS
MIKE SYNAR, OKLAHOMA
W.J. BILLY TAUZIN, LOUISIANA
RALPH M. HALL, TEXAS
DENNIS E. ECKART, OHIO
BILL RICHARDSON, NEW MEXICO
JIM SLATTERY, KANSAS
JOHN BRYANT, TEXAS
RICK BOUCHER, VIRGINIA
JIM COOPER, TENNESSEE
THOMAS J. MANTON, NEW YORK
C. THOMAS McMILLEN, MARYLAND
JAMES H. SCHEUER, NEW YORK
JOHN D. DINGELL, MICHIGAN
(EX OFFICIO)

MATTHEW J. RINALDO, NEW JERSEY
EDWARD R. MADIGAN, ILLINOIS
CARLOS J. MOORHEAD, CALIFORNIA
THOMAS J. TAUKE, IOWA
DON RITTER, PENNSYLVANIA
THOMAS J. BLILEY, JR., VIRGINIA
JACK FIELDS, TEXAS
MICHAEL G. OXLEY, OHIO
DAN SCHAEFER, COLORADO
NORMAN F. LENT, NEW YORK
(EX OFFICIO)

U.S. House of Representatives

Committee on Energy and Commerce

SUBCOMMITTEE ON TELECOMMUNICATIONS AND FINANCE

Washington, DC 20515

ROOM H2-316
HOUSE OFFICE BUILDING ANNEX NO. 1
PHONE (202) 226-2424

HERBERT H. BROWN
CHIEF COUNSEL AND STAFF DIRECTOR

PA/WP4-0067

SUBCOMMITTEE ON TELECOMMUNICATIONS AND FINANCE
DEMONSTRATION OF NON-ENTERTAINMENT APPLICATIONS
OF HIGH DEFINITION AND HIGH RESOLUTION SYSTEMS
JUNE 18-19 1990

Telecommunications industries are being swept into a maelstrom of new and developing technologies; colliding, combining, and converging, into unforeseen and exciting permutations. At the center of the whirlwind stands high definition television (HDTV), a convergence of digital-based computer technology with television to produce new visual displays that offer high resolution, wide screens, and digital-quality sound that almost certainly will transform the way entertainment programs will be delivered and displayed.

The most crucial, and perhaps the most exciting, applications of HDTV, however, go well beyond entertainment alone. Personal computers, semiconductors, fiber-optic systems, and satellite delivery technologies all touch upon or are touched by HDTV's promise. The fields of medicine, manufacturing, aerospace, publishing, computing, and defense all stand to benefit from developments in HDTV and display technology.

HDTV is closely linked to other key industries and technologies whose collective future will help shape much of our economy and society into the next century. HDTV challenges us to deal with crucial public policy issues in manufacturing, strategic economic planning, domestic and international standardization, relationships between government and business, and accelerated change in the telecommunications sector.

The House Subcommittee on Telecommunications and Finance is sponsoring this exhibition of HDTV applications so that attendees can acquire the perspective to view this whirlwind of converging technology not with consternation, but with anticipation of the many benefits high resolution display systems promise.

Bell Communications Research (Bellcore)

The Bellcore demonstration focuses on how Broadband Integrated Services Digital Networks (BISDNs) can provide a unique vehicle for delivering advanced television (ATV) services to the nation. The demonstration highlights the ability of optical fiber networks, with their natural high bandwidth capabilities, to deliver ATV with no compromise in quality. When combined with switching and customer control, these networks can provide a powerful set of visual communications capabilities for the

nation's hospitals and schools.

Bellcore's demonstration shows a coronary bypass operation performed by Dr. Denton Cooley and taped previously in Houston, which is being transmitted through twenty-five miles of fiber optic cable installed in the Cannon House Office Building. In Bellcore's lifelike scenario, medical students at a remote location can observe the procedure as if they were in the operating room with the surgeon.

Compression Labs, Inc.

Compression Labs, Inc. demonstrates an HDTV "codec" which digitizes and compresses HDTV video so that it can be transmitted over low-cost, ubiquitous T-1 telephone lines. Compression Labs, Inc. designed this codec for internal use by a Japanese company in a high-resolution videoconferencing application. The client requires the high resolution of HDTV for accurate representation of graphics and Kanji characters. In this application accurate video motion portrayal is secondary. Accordingly, the codec compression technique maintains HDTV spatial resolution but sacrifices motion rendition by displaying video at only five frames per second instead of the normal thirty frames per second.

Corabi International Telemetrics/Ikegami Electronics USA

Corabi International Telemetrics, a Maryland corporation with offices in Alexandria, Virginia, exhibits a form of high definition television called PDQ-TV (Professional Diagnostic Quality Television) which is designed specifically for medical applications. In its demonstration, Corabi compares the PDQ-TV HDTV video image to an image displayed on a standard NTSC broadcast monitor to enable the viewer to make direct comparisons between the technologies. PDQ-TV is designed to meet the needs of the medical community by providing a real time, full motion, high resolution, flicker free color image. Corabi has defined the requirements for this medical high definition video system through human performance trials conducted at Rush-Presbyterian St. Luke's Medical Center in Chicago, Illinois.

Corabi, in conjunction with Ikegami Electronics USA, Inc., defined and built the HDTV video system which is the backbone of the Corabi DX-1000 telepathology system. The Corabi DX1000 syster utilizes specialized medical HDTV technology, robotics and computers to transmit diagnostic quality images from one hospital to another. These high definition, full motion images can be transmitted between hospitals located in the same town or hundred of miles away. The Corabi DX1000 telepathy system is media independent since it can operate on broadband fiber optic cable, microwave, or satellite to achieve transmission of these medical HDTV images.

Ford Motor Company/Shima Seiki

Ford Motor Company demonstrates the Shima Seiki HDTV Paint System it has been using in its design studios for the past 12 months to develop design sketches and presentations. The wide aspect ratio and high-resolution that HDTV offers, coupled with the ability to interface to high definition video cameras and VTR's, provide the designer with a powerful tool capable of creating the realistic images necessary to achieve design direction.

NHK Japan Broadcasting Corporation

The Metropolitan Museum of Art, Polaris Entertainment, Inc. and NHK Japan Broadcasting Corporation demonstrate HDTV applications for an art museum. The exhibit features two types of applications: "Frederic Remington: The Truth of Other Days", an art program produced by the Metropolitan Museum of Art; and the HDTV graphic system currently in service at the Museum of Fine Arts, Gifu, Japan. The graphic system is interactive and visitors can select art programs they want to see from the menu. Equipment being used for the event includes one 1/2" VCR, HDTV graphics, and 50" rear projectors.

Ovonic Imaging Systems, Inc.

Ovonic Imaging Systems, Inc. demonstrates two high definition applications of its "giant microelectronics-on-glass" technologies: Color Flat Panel Displays and Image Scanners/Digitizers.

Panasonic ATVL

Panasonic ATVL displays an optical disc filing system for still images and computer graphics. By simple interactive means, digital images and sounds stored in the HDTV optical disc filing system can be located and reproduced on HDTV monitors in lecture halls or conference rooms. Art museums already are using this kind of system, and Panasonic ATVL is developing applications for libraries and other locations.

Scientific-Atlanta

Scientific-Atlanta displays a live satellite feed from an existing High Definition Television Network as an example of a current commercial application. Scientific-Atlanta has sold three HDTV networks (two in Canada and one in the United States) and an additional commercial application with the MAST Corporation between Massachusetts and Hong Kong for strategic planning purposes. In a venture with Comsat Video Enterprises,

Scientific-Atlanta has established an HDTV satellite network throughout the United States. This network will be used to transmit a Dionne Warwick benefit concert to 14 cities on June 30. Scientific-Atlanta is the world leader in HDTV satellite transmission and is the only company with a commercially available delivery system for fiber, cable and satellite. Scientific-Atlanta is in the process of developing new applications and markets for its system.

Symbolics Graphics

Symbolics demonstrates the first commercially available HDTV videographics workstation. This is the first product to merge computer graphics and high definition video processing, thereby eliminating the technological barriers that previously existed between these two worlds. This product, which is based on Symbolics' new FrameThrower technology, supports the entire range of video formats including all popular broadcast, computer, and proposed HDTV formats. It also supports real time frame-grabbing and universal genlock. Applications include mapping, command and control, simulation, graphics arts, modeling, CAD/CAM, animation, and scientific visualization.

Zenith Electronics Corporation

Zenith Electronics Corporation, the only independent U.S. color television and picture tube manufacturer, exhibits its advanced high-definition display technologies. On 15-inch "flat tension mask" (FTM) displays, Zenith displays high-definition workstation graphics, as well as non-entertainment applications of the company's progressive-scan "Spectrum Compatible" HDTV transmission system. Zenith also demonstrates a prototype 20-inch FTM high-resolution color display and discusses its strategy for low-cost, high performance, large screen FTM displays.