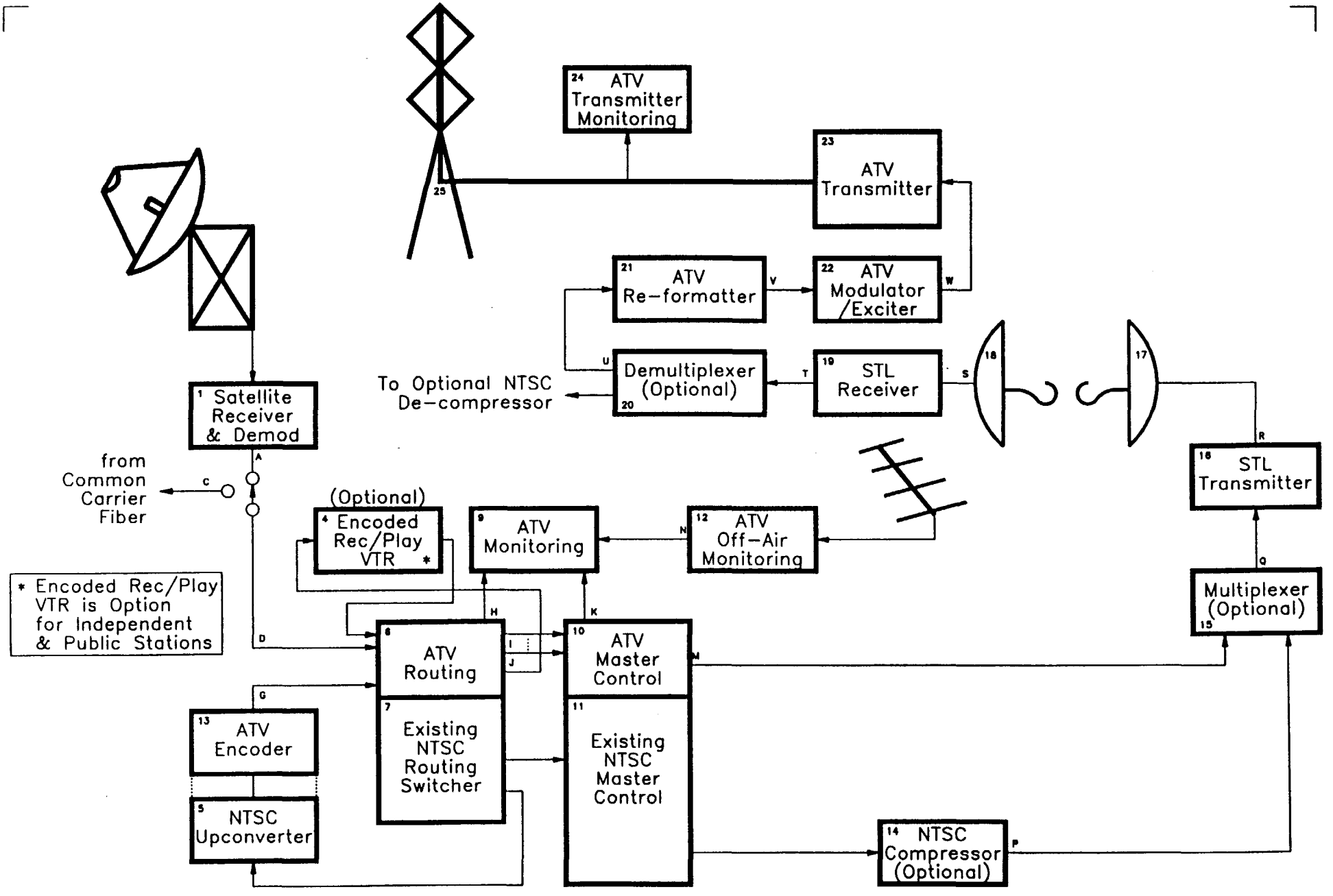

ATV "Minimal" Television Station

ATV "Minimal" Television Station Signal Format Categories and Related Data				
Signal	**Cat.#**	**Data A**	**Data B**	**Data C**
A				
C				
D				
G				
H				
I				
J				
K				
M				
N				
P				
Q				
R				
S				
T				
U				
V				
W				

See associated "Key to Signal Format Categories and Related Data" for the information required in each column

ATV "Minimal" Television Station Requirement for Equipment and Descriptions		
Unit #	Req.[1]	Description
1		
4		
5		
6		
7		
9		
10		
11		
12		
13		
14		
15		
16		
17		
18		
19		
20		
21		
22		
23		
24		
25		

[1] Requirement for each Unit indicated by: X = Required, O = Optional, N = Not Needed

ATV "Minimal" Television Station Equipment Functional Descriptions	
NOTE: Assumes minimum facilitation that can permit ATV broadcasting. Expected interface is fully compressed ATV signal. Station operations may be constrained by such choices.	
Unit #	**Description**
1	Satellite Receiver & Demodulator - Delivers fully ATV compressed signal from satellite for transmission without further source coding.
4	Encoded Record/Play VTR - Provided as option for Independent & Public stations for time shifting programs. Records & plays fully compressed signals without any "trick" modes.
5	NTSC Upconverter - Decodes NTSC input signals to components & converts raster structure to that required for ATV encoder. (Encoder may be combined into same piece of equipment.)
6	ATV Routing - Permits distribution & switching of signals around facility. Delivers multiple signals to ATV Master Control for clean on-air switching. May be as simple as a patch panel. May be an electronic switch.
7	Existing NTSC Routing Switcher - Used to distribute & switch signals in the existing NTSC plant. In a facility using the "minimal" approach, likely to be analog encoded NTSC.
9	ATV Monitoring - Provides picture monitoring for signals distributed internally, for Master Control output, and for off-the-air signals.
10	ATV Master Control - Provides basic clean switching of on-air signals. No effects (wipes, dissolves, keys, etc.) expected. Control may be linked to NTSC Master Control switcher.
11	Existing NTSC Master Control - Provides on-air continuity switching of NTSC signals for existing station. Uses analog encoded NTSC. May provide automated control for ATV Master Control switcher.
12	ATV Off-Air Monitoring - Provides off-air reception & demodulation of ATV signals for remote control purposes. Includes special test equipment necessary to maintain & certify proper transmitter operation. Picture monitoring handled by ATV Monitoring block.
13	ATV Encoder - Encodes upconverted NTSC signals. May optionally be reduced-complexity unit based upon exclusive handling of NTSC originated material. May be integrated with NTSC upconverter.

14	NTSC Compressor - Optional device to permit combination of NTSC signal with ATV signal for transmission over single Studio-to-Transmitter Link (STL).
15	Multiplexer - Optional unit to combine compressed ATV and compressed NTSC signals into single signal for STL transmission.
16	STL Transmitter - Microwave transmitter for either compressed ATV signal alone or combined compressed ATV & NTSC signals.
17	Transmit Dish Antenna for Microwave STL
18	Receive Dish Antenna for Microwave STL
19	STL Receiver - Microwave receiver for either compressed ATV signal alone or combined compressed ATV & NTSC signals.
20	Demultiplexer - Optional unit to separate multiplexed compressed ATV and NTSC signals into individual signals after STL transmission.
21	ATV Re-formatter - Converts compressed ATV signal from form used for STL transmission to form needed to modulate ATV broadcast transmitter.
22	ATV Modulator/Exciter - Generates modulated ATV signal and converts to broadcast channel frequency for input to transmitter.
23	ATV Transmitter - High power amplifier for on-channel signals from exciter.
24	ATV Transmitter Monitoring - Combines necessary RF conversion, demodulation, decoding, picture monitoring, and special test equipment for certification & maintenance of proper transmitter operation.
25	ATV Broadcast Antenna

IS/WP2 - 0196
19 MAY 22

FAX•FAX•FAX•FAX•FAX•FAX•FAX•FAX•FAX•FAX•FAX•FAX•FAX•FAX

Date: May 18, 1992

To: Merrill Weiss - FAX#: 908-906-0907

C.A.A.J. Greebe/R. McFarlane/A. Miron, Philips - FAX#: 914-945-6500
W. Fagot/P. Smith, NBC - FAX#: 212-664-5219

info: Curt Carlson
Jim Carnes

From: Glenn Reitmeier, David Sarnoff Research Center/609-734-2523
Carlo Basile, Philips/914-945-6319

7 Pages Total

MESSAGE

Attached are Replies to IS/WP2 Questions and Follow-up Questions.

Advanced Digital HDTV

Replies to IS/WP2 Questions and Follow-up Questions

May 19, 1992

General

1. Extensibility is built into the system definition (see *ADTV System Description*) and implemented in the prototype hardware. Extensibility is achieved by assigning a service type byte to each transport cell. Data relating to new or enhanced services may be added to the data stream at any time, appropriately packaged as transport cells identified by their service type byte. By definition, AD-HDTV receivers disregard all data with an unrecognized service type, thus providing extensibility without backward compatibility constraints. Strict compliance with the system definition is the only consideration that must be addressed in initial implementations in order to ensure extensibility.

   ATRC has not been able to identify any existing standard that covers the assignment of service types (ST). We have arbitrarily selected the ST assignments for video, audio1, audio2, aux data, etc. in our prototype hardware, and have reserved additional types for future use. The assignment of service type indicators is a trivial change in hardware.

   If selected as the recommended system by the Advisory Committee, we anticipate working with the industry to review and finalize the available number and assignment of service types as part of establishing the FCC standard. If any existing standard is identified that specifies such assignments, we will strongly consider its use.

2. Due to the standards-based approach of Advanced Digital HDTV, much of the required technical information is already available as ISO-MPEG documents. In addition, the *ADTV System Description* that has been distributed to the various ACATS subcommittees exceeded the minimum requirements of SS/WP1 for final certification. The ATRC will continue to make technical information available as appropriate. Upon an Advisory Committee recommendation, other detailed technical information will be made available as quickly as possible, given the large scope of this task. We anticipate that a timetable for delivering information will be agreed upon by the Advisory Committee and the proponent.

   We anticipate that the time required to to prepare final documentation will be on the order of 6 months, during which time intermediate drafts will be prepared and reviewed. A delay in FCC decision will commensurately delay the start of final documentation and review with industry.

3. ATRC member companies are leading manufacturers of consumer and professional equipment. ATRC companies are experienced in launching new

standards (e.g., NTSC color television, broadcast stereo sound, compact disc, CD-I, etc.) and have an established record of effectively supporting technology transfer to other manufacturers.

ATRC member companies are experienced and fully committed to performing effective technology transfer. However, it is premature to discuss details of a technology transfer plan prior to the selection of a system for field testing.

4. The ATRC believes that a competitive market for key ICs is essential. Part of our rationale for MPEG-based compression in AD-HDTV is that MPEG ICs for lower resolution video are already in production and available from several sources. We anticipate that MPEG ICs capable of HDTV rates will become available from such manufacturers more quickly and at lower cost than if a proprietary compression scheme is selected for the HDTV standard. Other relevant ICs should likewise be produced in high volume by competing IC manufacturers. In addition, semiconductor divisions of ATRC member companies will produce appropriate ICs for sale on the open market.

   IC design efforts at many companies will be triggered by an Advisory Committee Recommendation, and will be paced by a final FCC decision and timetable for implementation.

5. Implementation plans are already underway. Display manufacturing facilities, which require extremely large investments and long lead times, have already been established. Upon the Advisory Committee's recommendation to the FCC, ATRC companies will begin product design cycles. With available displays and MPEG ICs (see answer #4), Advanced Digital HDTV will have the fastest possible introduction, at the lowest possible costs.

   Product design efforts will likewise be triggered by an Advisory Committee Recommendation, and will be paced by a final FCC decision and timetable for implementation.

Broadcast

1. This answer has previously been provided: "The average AD-HDTV effective radiated powers required from a transmitting system for the same coverage area as that of an NTSC transmitter are 12.2, 14.9, and 10.7 dB below the NTSC peak powers at channels 6, 13, and 36, respectively. The NTSC peak effective radiated powers at these channels are taken to be 100, 316, and 5000 KW, respectively. The peak-to-average value of the AD-HDTV signal is 10 dB. The NTSC (Grade B) coverage contour is defined to be at that distance from the transmitter at which the local field is 64 dBμv/m for at least 50% of the time and 50% of the locations. For AD-HDTV the corresponding definition is that the ratio of the average carrier power to noise power in 6 MHz band be 16.1 dB for at least 90% of the time and 50% of the locations."

2. We anticipate that a variety of signal forms will be used in program origination. The Advanced Digital HDTV system design anticipates several

levels of related MPEG compression that will support a variety of quality/cost levels within the HDTV infrastructure. Cameras will likely use 1050-line rasters and deliver uncompressed data in the range of 620 - 1000 Mbps. Studio recorders will likely offer different levels of cost and performance by incorporating various levels of compression and/or subsampling. For example, existing D1 recording technology, with a data rate of 216 Mbps, could be used in conjunction with relatively modest compression to produce a reasonably low-cost recorder.

MPEG compression at 216 Mbps will be extremely high quality, and we believe that at such a high data rate, subsequent compressions and decompressions will not be a problem. This approach may be useful in lowering the cost of recording, distribution and switching equipment. While the underlying scanning format and compression approach used in production and post-production should be related to the terrestrial broadcasting standard, we believe that issues of an appropriate quality/bit rate (taking subsequent compression/decompression into account) should be addressed and standardized by an industry organization such as SMPTE.

3. We anticipate that distribution to network affiliates will be MPEG compressed video at data rates well within the capability to be delivered by either satellite or terrestrial lines. An MPEG compression standard that is carefully related to the terrestrial simulcast standard is the best choice for a distribution standard.

   While the underlying scanning format and compression approach used in distribution should be related to the terrestrial broadcasting standard, we believe that the issue of an appropriate quality/bit rate (taking subsequent compression/decompression transcoding into account) should be addressed and standardized by an industry organization such as SMPTE. We also beleive that particularly during the transistion period to HDTV, distribution will be most frequently performed at the level of compression used for transmission, and that local affiliates/stations will perform minimal decompression and processing of the signal.

4. The downstream production capabilities that are required by the industry will affect the choice of an appropriate data rate and compression technique for a distribution standard(s). For example, cuts may be directly achieved in compressed form if modest spatial compression (no motion-compensation) is used. High-quality keys and full image manipulation require a video signal to be decompressed for processing. Economic factors such as the cost of satellite bandwidth vs. the cost and quality of compression/decompression will determine appropriate distribution formats for different applications and markets. These will likely evolve over time, as economic factors change.

   MPEG compression has the unique advantage of having spatially-coded frames occur on a periodic basis, which allows artifact-free cuts to be made on GOP boundaries, even in highly-compressed transmission format. MPEG compression has the further advantage that the same standard may be used at higher bit rates with a different GOP structure, in order to allow more

accurate cuts in higher-quality signals. For example, MPEG compression may even be entirely spatial, so that frame-accurate cuts may be made. This flexibility means that a wide range of cost and capabilities can be provided by equipment manufacturers.

Most production processes will require full decoding, although some might be achieved with partial decoding.

Signals with modest compression will likely be found in production and post-production equipment and contribution links, as described in the answer to B.2

5. Uncompressed signals may be handled identically to CCIR 601 signals in a digital plant. Acceptable limits of signal compression/decompression in a post-processing environment are scene-dependent, and guidelines remain to be determined by the industry.

   Most further processing at local stations will require full decoding, although some might be achieved with partial decoding. Standards and guidelines for compressed signal handling remain to be determined by the industry.

6. The questioned mode of operation will generally require either new or modified equipment. There are at least two approaches to provide the desired capability:

   a. Existing digital microwave links can provide capacities of up to 90 Mbps. Such digital links will allow a TDM mix of AD-HDTV and compressed digital NTSC to be carried. It is notable thay no additional TDM standard needs be developed to achieve this capability. AD-HDTV's flexible data transport mechanism will allow the digital NTSC data to be carried directly within the AD-HDTV data stream by embedding it as a special service type. At the transmitter, the NTSC data is removed from the AD-HDTV stream.

      The required bandwidth is a function of the digital modulation technique used by the equipment manufacturer. QPSK and QAM are commonly used. An appropriate standard should be developed by industry.

   b. Analog microwave links may handle an AD-HDTV signal as an additional 6 MHz baseband signal. An FDM arrangement of AD-HDTV and NTSC (with approximately 12 MHz of baseband capacity and having appropriate guardbands) may be constructed to carry both signals.

      FDM is typically applied at some Intermediate Frequency, at the discretion of equipment manufacturers.

7. We anticipate that contribution signals will also be MPEG compressed video at data rates can be delivered by either satellite or terrestrial lines. Contribution and distribution signals will most likely differ in the amount and type of compression/decompression (e.g, motion-compensated vs. spatial) that is used. (Also see answer to question #3.) The ATRC believes that (just as in the case of distribution standards) contribution standards should be carefully related to the terrestrial simulcast standard.

There are many possilbilities that have cost/performance tradeoffs. Standards and guidelines for compressed signal transcoding remain to be determined by the industry.

Cable

1. Conditional access data can be decoded without decoding video and audio. Conditional access data may be treated as a special service type (see *ADTV System Description*) and packaged into its own transport cells that are independent of all other data. Alternatively, conditional access data may be included within the video/audio data. Conditional access receivers may be built to decode only the conditional access data and to subsequently decode video and audio service types only after receiving an appropriate command from the conditional access data stream.

   Digital encryption can be performed at any downstream point. AD-HDTV offers several different layers at which encryption may be applied.

2. We anticipate that signal distribution to most cable headends will be in final compressed form. This requires a data rate on the order of 20 Mbps, which can easily be achieved by a satellite QPSK link. AD-HDTV's layered system architecture enables cable headends to simply decode the QPSK symbols into a serial bit stream and then encode the bits either as an SS-QAM or a conventional QAM signal in a standard 6 MHz band.

   Local commercial insertion may be accomplished simply and economically. MPEG compression has the unique advantage of having spatially-coded frames occur on a periodic basis, which allows artifact-free cuts to be made on GOP boundaries, even in highly-compressed transmission format.

3. *The answers to B.3, B.4 and B.5 apply to cable as well.*

Common Carrier

1. We anticipate common carrier transmission within the B-ISDN/ATM framework. AD-HDTV's 148 byte data cells can be repackaged into ATM's 53 byte data cells for common carrier delivery. AD-HDTV's layered system architecture enables this repackaging at the transport layer to be completely transparent to higher layers, namely, video and audio compression.

   The data structures are applicable at any data rate.

2. Any data rate on the order of 20 Mbps is sufficient.

   We believe that particularly during the transistion period to HDTV, distribution will be most frequently performed at the level of compression used for transmission, and that local affiliates/stations will perform minimal decompression and processing of the signal..

3. **Bit error rate requirements for distribution and contribution standards will depend on the amount of compression that is used in these standards and the error handing capabilities that are designed into them.**

   AD-HDTV has been carefully designed to tolerate packet error rates on the order of 10^{-3}. BER requirements for distribution and contribution must be significantly lower. Very conservative BER requirements are generally planned in the specification of digital links.

Consumer

1. **Consumer VCRs have tradeoffs among compression format and data rate. These choices will be made by manufacturers in response to a terrestrial broadcast standard and the demands of the market. The lowest cost VCR option would directly record the transmitted data in its compressed form. No new head/tape technology will be required for such a recorder. AD-HDTV's MPEG-based compression, because it uses periodically occuring frames that are entirely spatially coded, has fundamental advantages in its ability to perform the search modes/features of analog VCRs. However, these capabilities have not been demonstrated on experimental hardware.**

   We expect that all features will be available in top-of-the-line models. As in today's market, low-cost models may have fewer features. The frame-based compression in AD-HDTV has no significant impact on search mode performance. On the other hand, it allows full-resolution stills to be presented in freeze-frame mode.

Satellite

1. **It is generally possible to carry AD-HDTV and NTSC signals on the same transponder. There are at least two approaches:**

   a. **Existing digital satellite links can provide capacities of about 60 Mbps. This will allow a TDM mix of AD-HDTV and/or compressed digital NTSC to be carried. Three AD-HDTV channels may be carried in a single transponder.**

      C-band (K-band) satellites can deliver 60 Mbps using a 36 MHz (54 MHz) transponder with QPSK modulation.

   b. **Analog satellite links may handle an AD-HDTV signal as an additional 6 MHz baseband signal. An FDM arrangement of AD-HDTV on a QPSK carrier and NTSC on an FM carrier may be constructed to carry both signals.**

      FDM could be performed either at RF or at an Intermediate Frequency. This could be accomplished using standard transponders, with a lower FM modulation index for NTSC. The effect of this would be to lower the CNR threshold for NTSC.

IS/WP2-0197
19 MAY 92

FCC Advisory Committee on Advanced Television Service
Implementation Subcommittee Working Party 2 on Transition Scenarios

By FAX

May 6, 1992

Prof. Jae S. Lim, Director
Advanced Television Research Program
Massachusetts Institute of Technology
36-653 MIT
Cambridge, MA 02139

Dear Jae:

This is a reminder of the need of IS/WP-2 for responses from MIT on a number of requests for information that have been made, some repeatedly, over the past four months.

The initial request, contained in materials sent to you on January 2 and discussed in a meeting with proponents on January 13, was for answers to specific questions and your comments on the PERT and Gantt charts and Lists of Assumptions developed by IS/WP-2. You were requested to respond in writing by February 24, at which time follow-up questions were developed for the other proponents that had responded by that time. You were given an extension to March 11, but that date also passed without a response. Your initial response was finally received on March 20. It provided initial answers to the questions but did not contain any of the requested comments on IS/WP-2 work.

You were invited to make a presentation along with the other proponents at the IS/WP-2 joint meeting with SS/WP-3 on March 25, but you were unable to attend. On April 6, a set of follow-up questions was sent to you with a response date of April 21, to allow consideration of your answers at the IS/WP-2 meeting that date. No response to the follow-up questions was received by then, and another month was lost. In fact, no response to the follow-up questions has yet been received.

On March 18, a block diagram of a transitional television station, for use by both IS/WP-2 and SS/WP-3, was sent to you for your comment and input on how it would be implemented with your system. On April 7, a revised block diagram was sent to you together with some blank tables provided for your ease in responding regarding the block diagram. These updates had been developed as a result of the meeting with proponents on March 25 and 26. A further revised block diagram and tables, now split into a "minimal" and a "transitional" television station were sent to you following the April 21 and 22 meetings of IS/WP-2 and SS/WP-3. No response has yet been received from you on any of the block diagrams and tables.

The next meetings of IS/WP-2 and SS/WP-3 will take place on May 19 and 20. It is imperative that you provide the required information before then. As I have told you on the phone on several occasions, the work of the various working parties will have to be completed over the next several months. If your inputs are not forthcoming soon, the committees' work will have to be completed without them. This will do you a great disservice. In addition to the inability to provide an evaluation and recommendation on the implementation of your system, it will cast doubt on your ability to support the actual implementation if your system were selected. This might have to be reported by IS/WP-2 among its conclusions.

To review, then, the following outstanding items are still required by IS/WP-2, some to be shared with SS/WP-3:

1. Responses to the follow-up questions sent to you on April 6.

2. Comments on the IS/WP-2 PERT and Gantt charts and Lists of Assumptions.

3. Filled in tables describing operation of the CCDC system with the television station block diagrams provided.

4. A presentation on your system and your answers to the requests for information listed in items 1-3 above.

As always, if there is anything I can do to be of help in facilitating your responses or if there are any questions I can answer regarding what is needed, please do call upon me. You can reach me at (908) 906-0907.

Very truly yours,

/s/ Merrill Weiss

S. Merrill Weiss, Acting Chairman
Implementation Subcommittee Working Party 2 on Transition Scenarios

FCC Advisory Committee on Advanced Television Service
Implementation Subcommittee Working Party 2 on Transition Scenarios

By FAX

May 6, 1992

Mr. Robert Rast, Vice President
VideoCipher Division
General Instrument Corporation
6262 Lusk Boulevard
San Diego, CA 92121

Dear Bob:

This is a reminder that there are three items from General Instrument regarding the DigiCipher system that IS/WP-2 anticipates receiving in time for its next meeting. That next meeting is scheduled for Tuesday, May 19, and your responses are requested by Friday, May 15, to permit distribution to the participants in advance of the meeting.

The three items expected from you, listed in order of priority, are:

1. A written reply to the follow-up questions provided to you on March 17 and discussed at the meeting with proponents on March 25. Your reply was expected in time for the meeting of April 21 but has not yet been received.

2. Filled-in tables describing the application of the DigiCipher system to the implementation of the facilities described in the block diagrams of a "minimal" and a "transitional" television station, supplied to you most recently on April 30. An initial reply was expected but not received in time for the April 21/22 joint meeting of IS/WP-2 and SS/WP-3.

3. Comments on the PERT charts, Gantt charts, and Lists of Assumptions developed by IS/WP-2 to model the implementation of Advanced Television in the various industry segments. In particular, your thoughts on the application of the models to the implementation of DigiCipher are sought.

The work of both IS/WP-2 and SS/WP-3 is now reaching a crucial stage. Final reports are being formulated. It is most important that the requested information be supplied in a timely manner so that proper evaluation can be made of your system and included in the output of the working parties.

As always, if you have any questions about what is required, or if I can be of help in any other way, please call me at (908) 906-0907.

Very truly yours,

/s/ Merrill Weiss

S. Merrill Weiss,Acting Chairman
Implementation Subcommittee Working Party 2 on Transition Scenarios

FCC Advisory Committee on Advanced Television Service
Implementation Subcommittee Working Party 2 on Transition Scenarios

By FAX

May 6, 1992

Mr. Wayne Luplow, Executive Director
Electronic Systems Research and Development
Zenith Electronics Corporation
1000 Milwaukee Avenue
Room 690
Glenview, IL 60025-2493

Dear Wayne:

This is a reminder that there are two, and possibly three, items from Zenith regarding the DSC-HDTV system that IS/WP-2 anticipates receiving in time for its next meeting. That next meeting is scheduled for Tuesday, May 19, and your responses are requested by Friday, May 15, to permit distribution to the participants in advance of the meeting.

The three items expected from you, listed in order of priority, are:

1. A possible written reply to the follow-up questions provided to you on March 17 and discussed at the meeting with proponents on March 25. It is unclear whether the overhead projection charts used by Carl Eilers to make the presentation at the March 25 meeting are to be taken as your full response or whether you plan to submit a set of written answers to the follow-up questions. Please advise on this and, if you will be supplying written answers, please do so in time for the next meeting as mentioned above.

2. Filled-in tables describing the application of the DSC-HDTV system to the implementation of the facilities described in the block diagrams of a "minimal" and a "transitional" television station, supplied to you most recently on April 30. An initial reply was expected but not received in time for the April 21/22 joint meeting of IS/WP-2 and SS/WP-3.

3. Comments on the PERT charts, Gantt charts, and Lists of Assumptions developed by IS/WP-2 to model the implementation of Advanced Television in the various industry segments. In particular, your thoughts on the application of the models to the implementation of DSC-HDTV are sought.

The work of both IS/WP-2 and SS/WP-3 is now reaching a crucial stage. Final reports are being formulated. It is most important that the requested information be supplied in a timely manner so that proper evaluation can be made of your system and included

in the output of the working parties.

As always, if you have any questions about what is required, or if I can be of help in any other way, please call me at (908) 906-0907.

Very truly yours,

/s/ Merrill Weiss

S. Merrill Weiss,Acting Chairman
Implementation Subcommittee Working Party 2 on Transition Scenarios

FCC Advisory Committee on Advanced Television Service
Implementation Subcommittee Working Party 2 on Transition Scenarios

By FAX

May 6, 1992

Mr. Glen Reitmeier, Director
High Definition Imaging and Computing Laboratory
David Sarnoff Research Center
201 Washington Road
Princeton, NJ 08540-6449

Dear Glen:

This is a reminder that there are three items from the ATRC regarding the AD-HDTV system that IS/WP-2 anticipates receiving in time for its next meeting. That next meeting is scheduled for Tuesday, May 19, and your responses are requested by Friday, May 15, to permit distribution to the participants in advance of the meeting.

The three items expected from you, listed in order of priority, are:

1. A written reply to the follow-up questions provided to you on March 17 and discussed at the meeting with proponents on March 25. The minutes of the March 25 meeting indicate that you committed to supplying a written response to the questions. Your reply was expected in time for the meeting of April 21 but has not yet been received.

2. Filled-in tables describing the application of the AD-HDTV system to the implementation of the facilities described in the block diagrams of a "minimal" and a "transitional" television station, supplied to you most recently on April 30. Your initial reply in time for the April 21/22 joint meeting of IS/WP-2 and SS/WP-3 was most helpful. A revised response is needed for the next meeting round.

3. Comments on the PERT charts, Gantt charts, and Lists of Assumptions developed by IS/WP-2 to model the implementation of Advanced Television in the various industry segments. In particular, your thoughts on the application of the models to the implementation of AD-HDTV are sought. You had something to say on this at the March 25 meeting, but your review and/or comments are requested in writing.

The work of both IS/WP-2 and SS/WP-3 is now reaching a crucial stage. Final reports are being formulated. It is most important that the requested information be supplied in a timely manner so that proper evaluation can be made of your system and included in the output of the working parties.

As always, if you have any questions about what is required, or if I can be of help in any other way, please call me at (908) 906-0907.

Very truly yours,

/s/ Merrill Weiss

S. Merrill Weiss,Acting Chairman
Implementation Subcommittee Working Party 2 on Transition Scenarios

ATRC

I S/WP2-01 98
19 MAY 92

ATRC

ATV Transitional Television Station Signal Format Categories and Related Data				
Signal	Cat.#	Data A	Data B	Data C
A	3 or 4	45-60 or 24 Mbps	Inter	4:2:0
B	3 or 4	45-60 or 24 Mbps	Inter	4:2:0
C	3 or 4	45-60 or 24 Mbps	Inter	4:2:0
D	4	24 Mbps		
E	4	24 Mbps		
F	4	24 Mbps		
G	4	24 Mbps		
H	4	24 Mbps		
I	4	24 Mbps		
J	4	24 Mbps		
K	4	24 Mbps		
L	4	24 Mbps		
M	4	24 Mbps		
N	8	AD-HDTV		
O	5	Digital	24 Mbps	
P	5	Digital	8 Mbps	
Q	6	Digital	24-32 Mbps	
R	7	32-QAM	6-8 MHz	
S	7	32-QAM	6-8 MHz	
T	6	Digital	24-32 Mbps	
U	5	Digital	24 Mbps	
V	5	Digital	24 Mbps	
W	8	AD-HDTV		

See associated "Key to Signal Format Categories and Related Data" for the information required in each column

ATRC

ATRC

ATV Transitional Television Station Requirement for Equipment and Descriptions		
Unit #	Req.[1]	Description
1	X	QPSK demod to serial digital
2	O	45-60 Mbps decompress (needed only for local contribution)
3	X	PC/workstation based packet inserter (required by law)
4	O	24 Mbps playback VCR (will be based on consumer VCR)
5	O	NTSC upconversion and compression
6	X	Digital routing switcher (24 Mbps)
7	O	Existing NTSC routing switcher
8	O	AD-HDTV receiver and downconverter and NTSC encode
9	X	AD-HDTV receiver(s) and/or BER monitoring
10	X	PC/Workstation based equipment controller (for 3, 4, 5, etc.)
11	O	Existing NTSC master control
12	N	Function provided by #9
13	O	MPEG compression & PDT packet formatting (needed only for local contribution)
14	O	NTSC compression and packetization
15	O	PDT packet mux(no additional protocol overhead required)
16	X	STL is highly station dependent. Digital microwave is most likely.
17	X	STL is highly station dependent. Digital microwave is most likely.
18	X	STL is highly station dependent. Digital microwave is most likely.
19	X	STL is highly station dependent. Digital microwave is most likely.
20	O	PDT packet demux
21	O	Error correction and FEC code regeneration
22	X	SS-QAM modulation (digital) and IF and RF translation (analog)
23	X	Power Amplifier
24	O	Average Power Monitoring
25	X	Antenna

[1] Requirement for each Unit indicated by: X = Required, O = Optional, N = Not Needed

ATRC

ATRC

ATV "Minimal" Television Station Signal Format Categories and Related Data				
Signal	Cat.#	Data A	Data B	Data C
A	4	24 Mbps		
C	4	24 Mbps		
D	4	24 Mbps		
G	4	24 Mbps		
H	4	24 Mbps		
I	4	24 Mbps		
J	4	24 Mbps		
K	4	24 Mbps		
M	4	24 Mbps		
N	8	AD-HDTV		
P	5	Digital	8 Mbps	
Q	6	Digital	24 - 32 Mbps	
R	7	32-QAM	6 - 8 Mbps	
S	7	32-QAM	6 - 8 Mbps	
T	6	Digital	24 - 32 Mbps	
U	5	Digital	24 Mbps	
V	5	Digital	24 Mbps	
W	8	AD-HDTV		

See associated "Key to Signal Categories and Related Data" for the information required in each column.

ATRC

ATRC

ATV "Minimal" Television Station Requirement for Equipment and Descriptions		
Unit #	Req.[1]	Description
1	X	QPSK demod to 24 Mbps serial digital
4	O	24 Mbps VCR (based on consumer VCR)
5	O	NTSC Upconverter to 1050-lines
6	X	24 Mbps Digital Routing Switcher
7	O	Existing NTSC Routing Switcher
9	X	AD-HDTV receiver and/or BER monitor
10	X	PC/Workstation-based equipment controller
11	O	Existing NTSC Master Control
12	N	Function provided by #9
13	O	ATV Encoder of Upconverted NTSC
14	O	NTSC compression and packetization
15	O	PDT & NTSC packet mux
16	X	STL is highly station-dependent (digital microwave most likely)
17	X	"
18	X	"
19	X	"
20	O	PDT & NTSC packet demux
21	O	Error correction and FEC regeneration
22	X	SS-QAM modulation (digital); IF & RF translation (analog)
23	X	Power amplifier
24	O	Average power monitoring
25	X	Antenna

[1] Requirement for each Unit indicated by: X = Required, O = Optional, N = Not Needed

IS/WP2-0199
19 MAY 92

N H K
JAPAN BROADCASTING CORPORATION

GENERAL BUREAU FOR AMERICA
ROOM 1430
1 ROCKEFELLER PLAZA
NEW YORK, N. Y. 10020

(212) 489-9550

May 13, 1992

Mr. S. Merrill Weiss
Chairman
IS/WP2 of FCC Advisory Committee on Advanced Television Service
25 Mulberry Lane
Edison, NJ 08820-2980

Dear Merrill:

Here is NHK's answer to your question on the configuration of ATV Minimal Television Station and ATV Transitional Television Station. If you have any questions, please call me at (212) 489-9550.

Sincerely,

Keiichi Kubota

Keiichi Kubota
Senior Scientist