Consumer

1.

- We are not ready to share the details of the implementation of VCR features.
- We are also not yet revealing the results of our speed search simulations.
- The temporal domain (inter-frame processing) must of course be considered in the implementation of various features.

AT&T

ZENITH

Comments on PERT and GANTT Charts

The impact on the inplementation time table by the choice of raster scanning standards has been discussed.

AT&T

ZENITH

1. HDTV Studio Cameras

- No new technology is needed to implement a 787.5, 1 : 1 progressive source.
- Studio equipment data rates are no different than for 1125, 2 : 1 or 1050, 2 : 1 sources.
- Analog bandwith requires a slight increase i.e., from 30 MHz to 34 MHz (13% increase).

AT&T

ZENITH

1. HDTV Studio VTR's

- The digital data rate for 787.5, 1 : 1 sources is essentially the same as for 1125, 2 : 1 sources.

- A slight change of the divider circuits in an 1125, 2 :1 HDTV VTR is all that is necessary to accomodate 787.5, 1 : 1 scanning standards.

AT&T

ZENITH

3. Consumer Displays

- Deflection yokes, transformers, and convergence components for 47 KHz (48 KHz) are already available for the monitor market.

- No new core material for 47 KHz deflection components is needed.

- Faster semiconductor components (transistors, diodes) are now available for improved efficiency.

AT&T

ZENITH

Comments on
ATV Transitional TV Station Block Diagram

- Implementation of concepts shown in the IS/WP-2 block diagram is <u>not</u> the quickest way nor the least costly for many broadcasters to get "on the air".
- The least expensive and most expedient way is the simple pass-through of the fully compressed signal.
- Pass-through Block Diagram illustrates that concept.

AT&T

ZENITH

COMPLETE DSC-HDTV SIMULCAST FACILITY

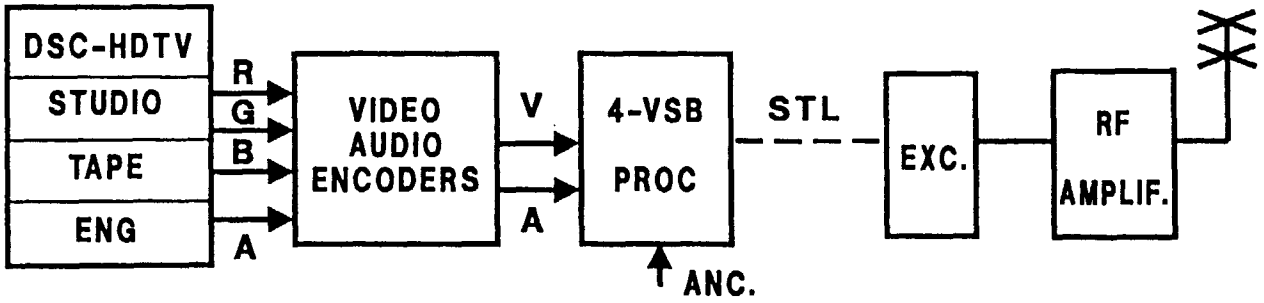

HDTV PROGRAM PASS-THROUGH

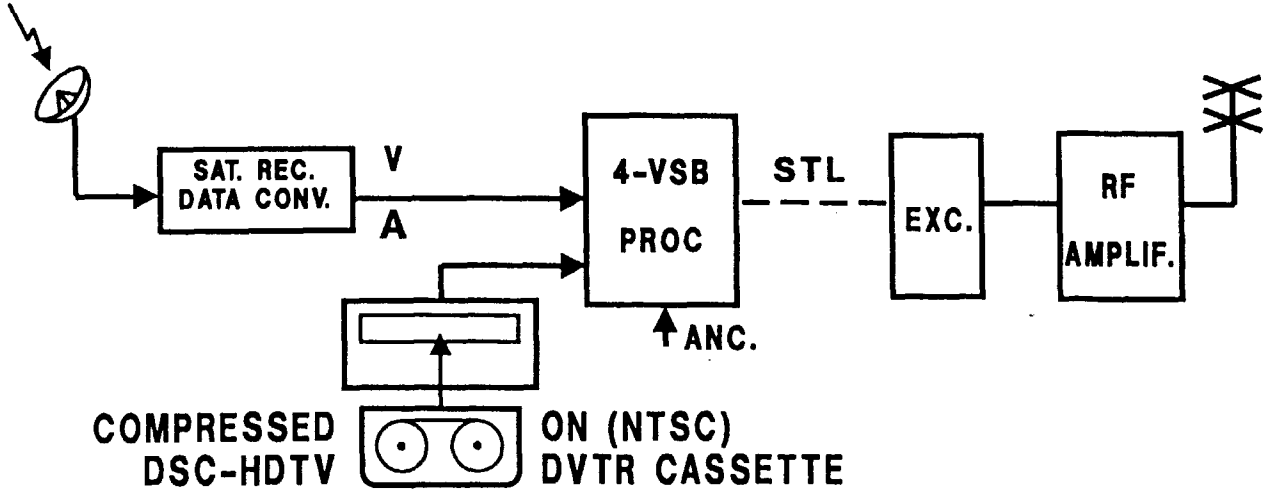

AT&T

ZENITH

25 MAR 92

TRC

Advanced Digital High Definition Television

March 25, 1992

Outline

- Introduction
- Video and Audio Compression
- Transport and Transmission
- Coverage Area
- Summary

Key Elements of ADTV

- MPEG++ video compression
  - ATRC adaptation of ISO-MPEG video compression standard
  - upgrades MPEG to HDTV performance levels
  - adds video format flexibility
  - performs video data prioritization for robustness
- MUSICAM audio compression
  - ISO-MPEG audio compression standard
- Prioritized Data Transport
  - cell-relay data transport layer provides robustness
  - prioritized delivery of data allows "graceful degradation"
  - provides service flexibility (video, audio, data)
- Spectrally Shaped QAM
  - ATRC adaptation of proven and widely-accepted QAM
  - two-tier physical transmission
  - increases immunity from co-channel NTSC interference
  - reduces interference into NTSC co-channels

ATRC

ADTV System Layers

Production Standard

Pictures

Video Data Structures

MPEG++ Compression

Coding

Ranking

Prioritized Data Transport

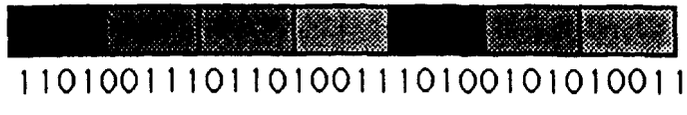

Cells

Spectrally-Shaped QAM Transmission

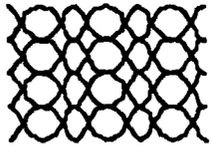

Symbols

ATRC

ADTV System Block Diagram

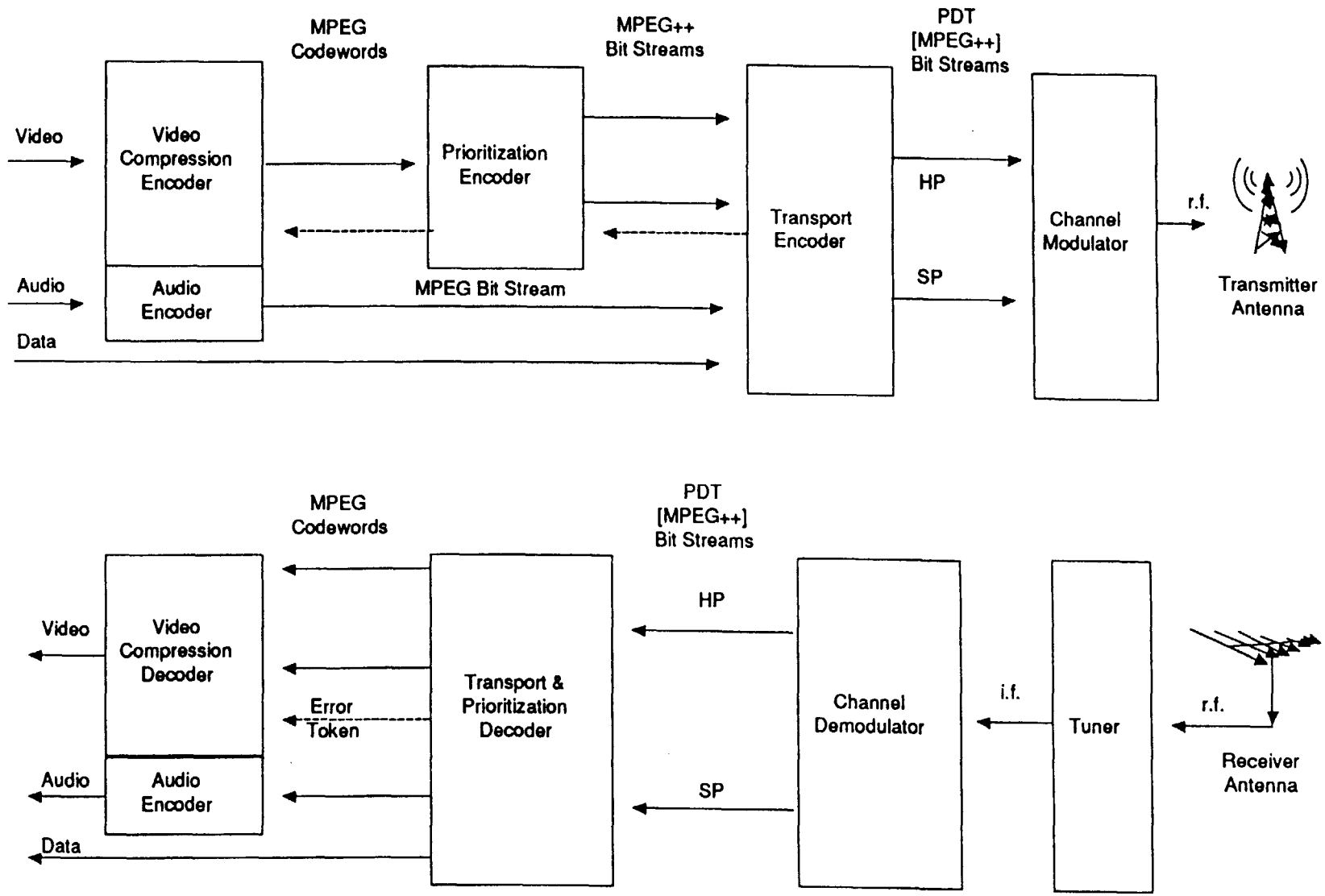

TRC

Video and Audio Compression

Video Specifications

Raster Formats	* 1050/2:1/59.94 1050/1:1/29.97 1050/1:1/24
Pixel formats	1440 x 960 (720 x 480) 1440 x 810 (720 x 405) * 1500 x 960 (750 x 480)
Sampling rate	54.0 MHz (27.0 MHz chroma) * 56.64 MHz (28.32 MHz chroma)
Bandwidth	24.5 to 27 MHz * 23.6 MHz
Resolution	730 to 810 TVL/PH * 700 TVL/PH (1248 samples/PW)
Video bit rate	17.73 Mbps

* prototype hardware configuration

MPEG++

- MPEG provides high-quality compression
  - developed by a committee of worldwide compression experts
  - bi-directional motion compensation is a key attribute
  - solves occlusion/reveal problems of traditional approaches
  - preserves motion compensation performance on a scene cut

- ATRC improvements
  - scene analysis for perceptual optimization
  - frame-based coding provides HDTV and film modes and transparently handles interlaced and progressive scan

- *Prioritization* produces High-Priority data that constitutes a "viewable picture" -- and Standard-Priority data that carries the additional information for "full HDTV quality"
  - viewable pictures provide service during occasional periods when full-quality pictures cannot be received

TRC

MPEG++ Concept

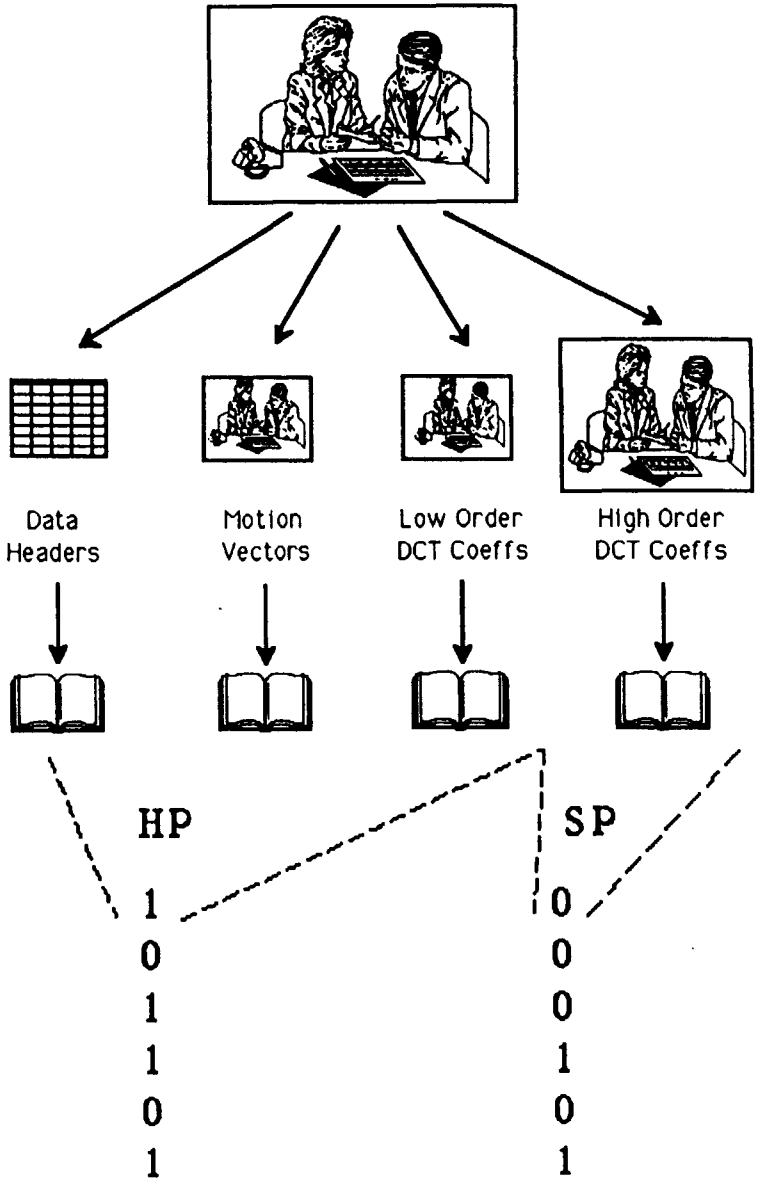

Pictures, Pixels and Lines

Video Data Structures

Coding

Prioritization

MPEG++ Data Streams

ATRC

MPEG Video Encoder

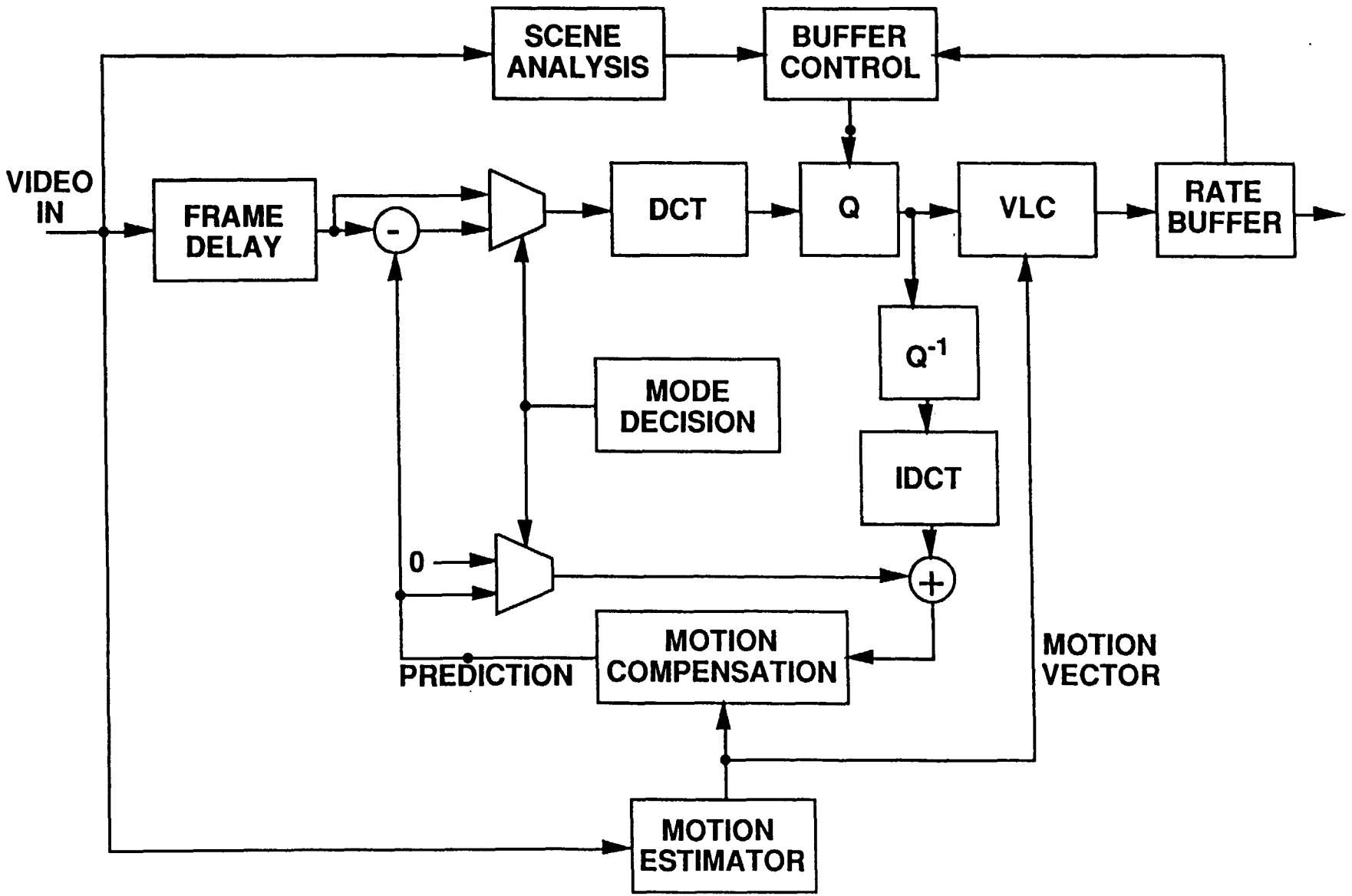

Group of Pictures

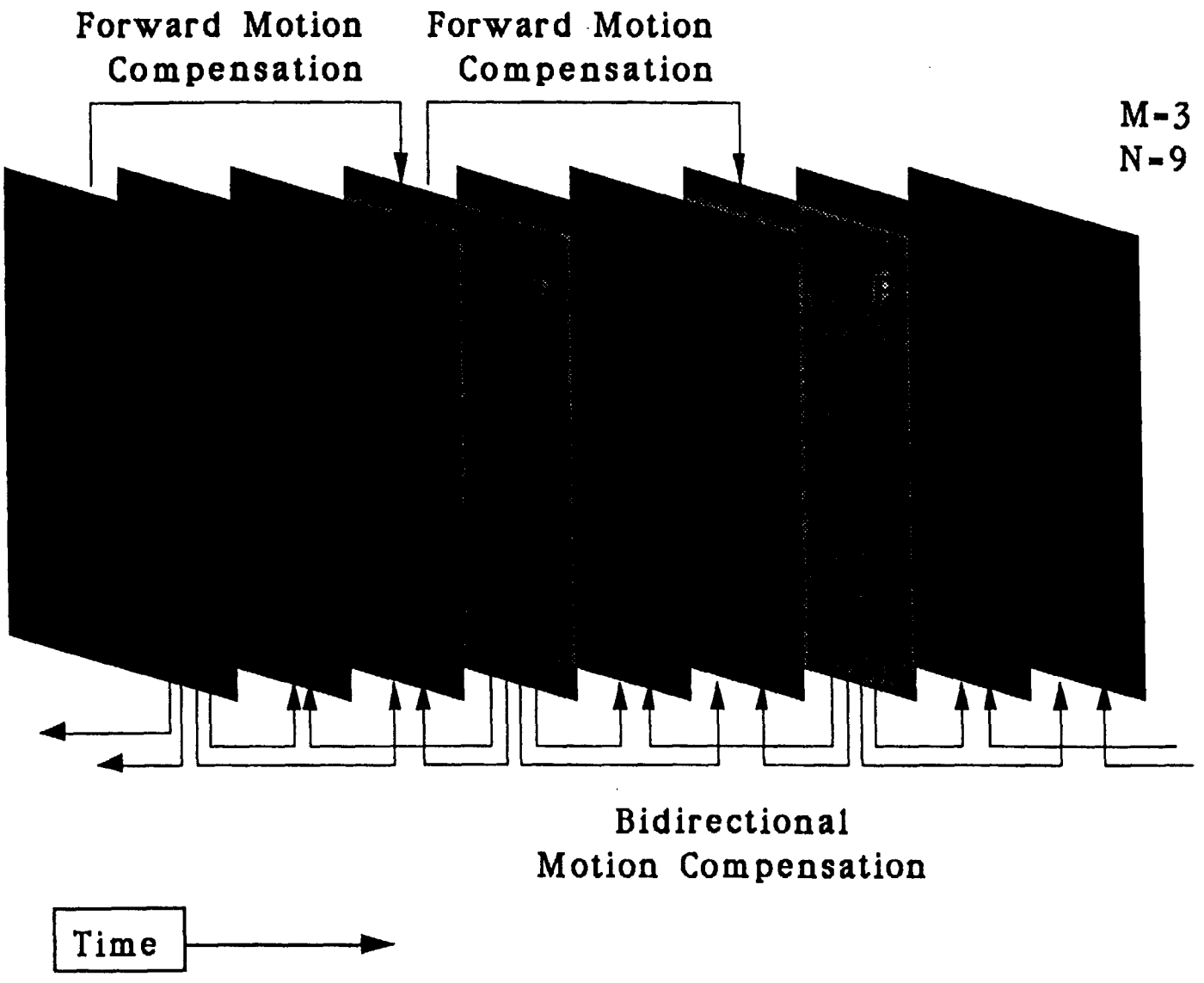

Coding Modes

FRAME TYPE	INTRAFRAME MODE	INTERFRAME MODES		
		FORWARD MOTION	BACKWARD MOTION	BIDIRECTIONAL MOTION
I (INTRAFRAME)	✓	N/A	N/A	N/A
P (PREDICTED)	✓	✓	N/A	N/A
B (BIDIRECTIONAL)	✓	✓	✓	✓

- Coding mode selection is performed for each macroblock
  - performance is optimized to picture content
  - example: on a scene cut, B-frame MBs will be coded as intra

ATRC

Slices, Macroblocks and Blocks

A slice is a collection of adjacent Macroblocks

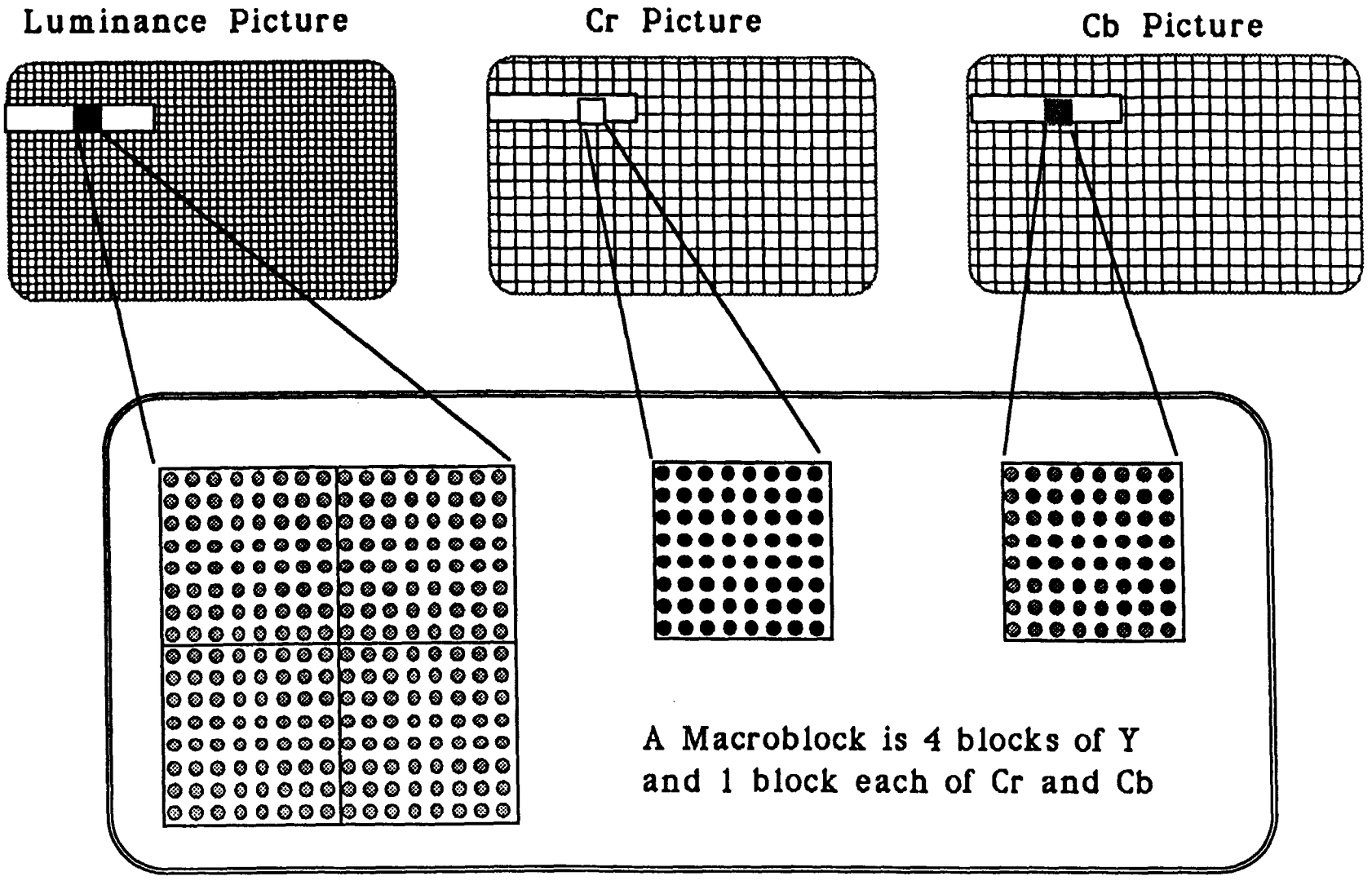

ADTV Audio Specifications

MUSICAM – (Masking-Pattern Adapted Universal Subband Integrated Coding and Multiplexing)

- ISO-MPEG Layer II
- Subband Coding
- Bit allocation of each subband is determined by use of a psychoacoustic model

Nominal Audio configuration	2 stereo pairs of audio
Sampling rate	48 kHz, (8008/5 x 29.97)
Bandwidth	23 kHz
Dynamic range	16 bits/sample
Compressed audio bit rate	256 kbps per stereo pair
Auxiliary Data	256 kbps

Data Compression Summary

- ADTV's MPEG++ video and MUSICAM audio are based on ISO-MPEG compression standards
  - proven techniques developed as winners of side-by-side expert evaluations
  - bi-directional motion compensation provides high performance

- MPEG++ improves standard MPEG performance and adapts it for simulcasting
  - flexible video formats
  - picture quality
  - prioritization

- MPEG was designed for digital storage media
  - preserves search and random access capabilities
  - a good basis for VCR

Transport and Transmission

Prioritized Data Transport

- Packages and synchronizes data for two-tier (High-Priority and Standard-Priority) transmission

- Transport is a communications layer that encapsulates the MPEG++ bit stream in fixed-size transport cells (standard practice in data communications)

- Provides many layers of "safety nets"
  - error correction
  - error detection
  - decoder reentry

- Provides flexibility and extensibility
  - there is no predetermined mix of video, audio, or data
  - service type mix can change dynamically
  - cells with unrecognized service types are disregarded
  - accepted practice in data communications

Transport Specifications

SERVICE DATA (video, audio, etc.)	120 bytes
forward error correction	20 bytes
frame check sequence (error detect)	2 bytes
adaptation header	4 bytes
service type	1 byte
cell synchronization	1 byte
total cell size	148 bytes