ATRC

Prioritized Data Transport Format

ADTV separately packages video, audio and auxiliary data in fixed-length cells.

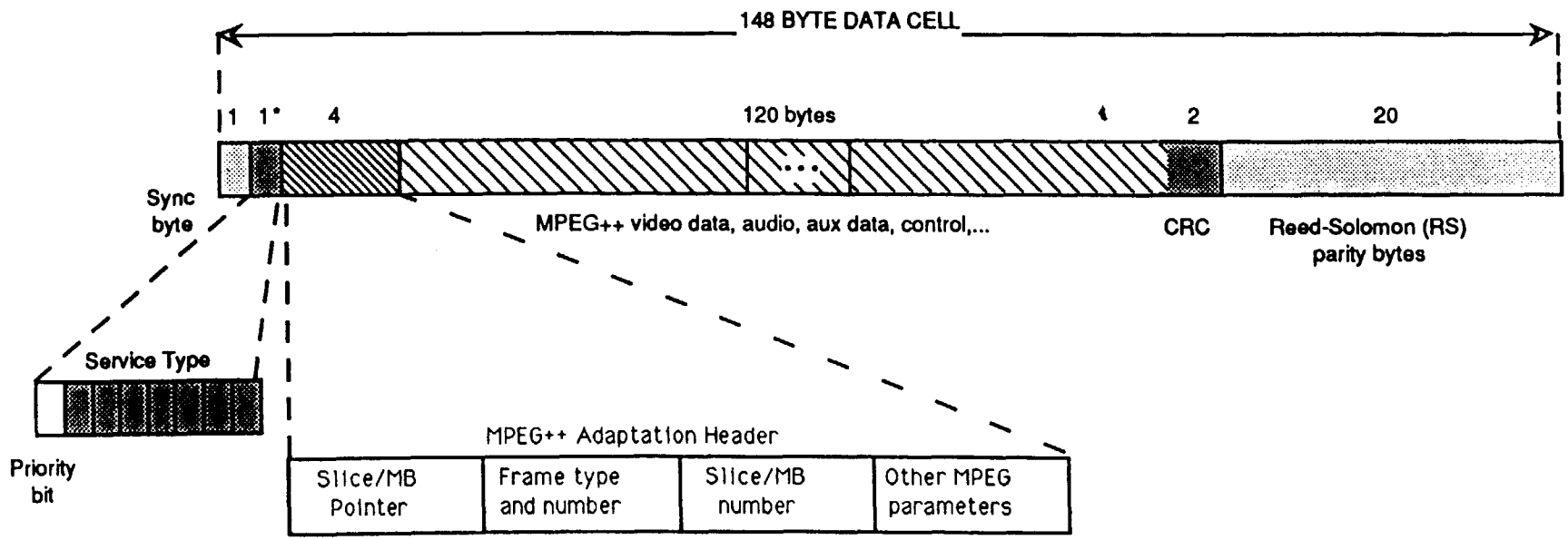

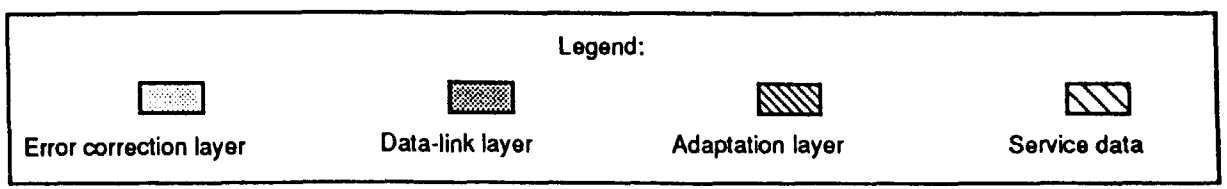

Data Transport Robustness

- Reed-Solomon FEC corrects up to 10 Byte errors per cell
- Data interleaving protects against burst errors
- Cyclic Redundancy Check FCS detects uncorrectable errors
- MPEG++ adaptation header provides a reentry pointer that allows the video decoder to smoothly resume processing good video data after a cell loss
- Erroneously received cells are discarded
- Cell sync and sequence number allow synchronization even under extremely poor transmission conditions

Reentry Pointer Example

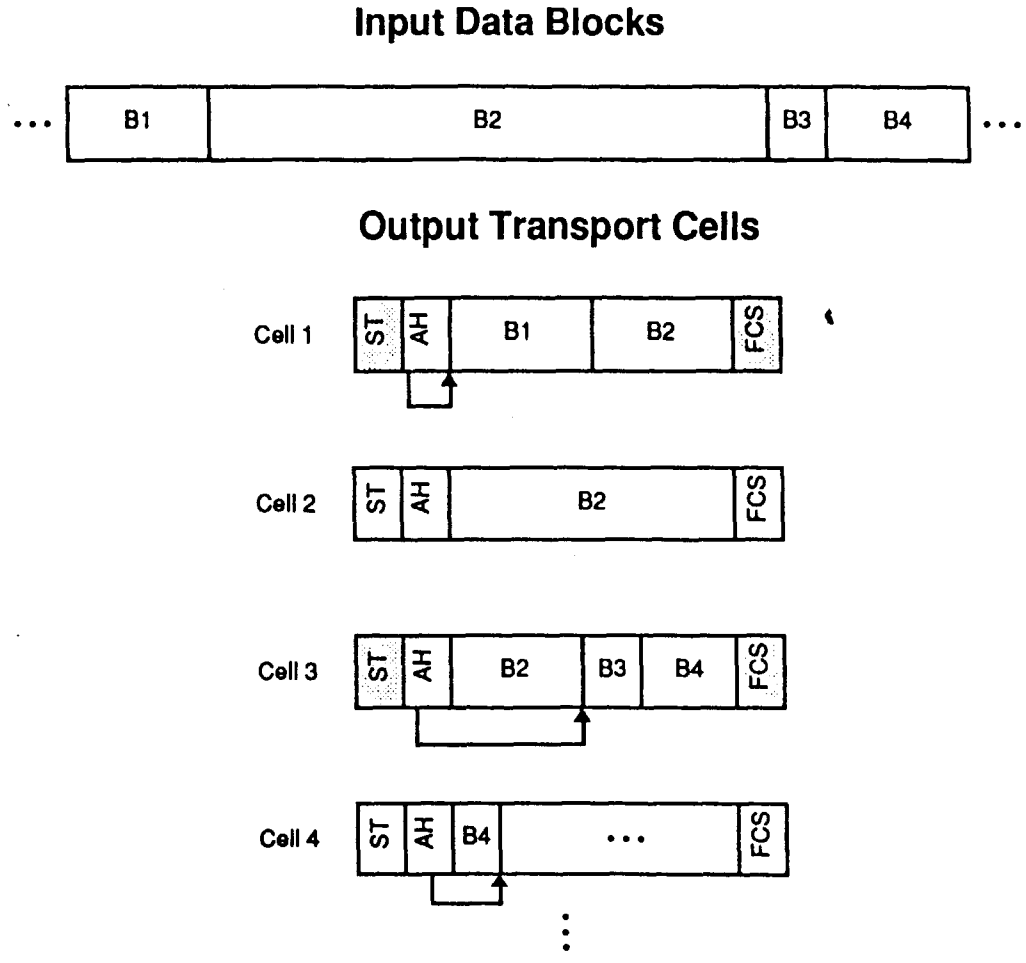

Four variable-length data records (B1, B2, B3, and B4) are to be formatted according to the PDT format specification into four transport cells. Cells 1,3 and 4 each have an entry points corresponding to the start of the first new video record, while cell 2 (which contains video data segmented from within record B2) has no entry point. In the event that an error leads to a loss of cell 2, the entry pointer in cell 3 enables the receiver to decode B1, reject B2 and restart video decoding at record # B3.

ADTV Data Stream

VIDEO	VIDEO	AUX DAT 2	AUDIO 1	VIDEO	AUX DAT 1	AUDIO 2	VIDEO	AUX DAT 1

- An ADTV data stream consists of a flow of cells
  - each cell contains a single type of data
  - there is no predetermined mix of video, audio, or aux data
  - service type mix can change *dynamically*
  - cells with unrecognized service types are disregarded

- This allows flexibility in the services that can be provided
  - "second video program" in a user-selectable window
  - download program-related software to "smart receivers"
  - rapid enabling of pay-per-view decoders on cable
  - future enhancements such as compatible 3-D HDTV

Important Signal Characteristics

- Ability to continuously deliver a high data rate
- Ability to provide coverage area comparable to NTSC, even with relatively low power transmission
- An NTSC-friendly signal that minimizes interference with existing NTSC service
- Ability to withstand very high levels of NTSC co-channel interference

Spectrally-Shaped QAM

- SS-QAM uses two separate 32-QAM carriers
  - a wideband Standard-Priority carrier
  - a narrowband, higher-power High-Priority carrier
- The HP carrier has "viewable picture" and sound
- The SP carrier has the rest of the HDTV data
- Spectral structure *avoids* NTSC co-channel interference
  - NTSC picture and sound carriers miss ADTV spectrum
  - reliable ADTV reception up to -2 dB D/U ratio
- NTSC-friendly operation
  - low ADTV power
  - ADTV spectrum misses NTSC sound carrier
  - HP carrier is attenuated by NTSC VSB filter

ATRC

Spectrally-Shaped QAM Concept

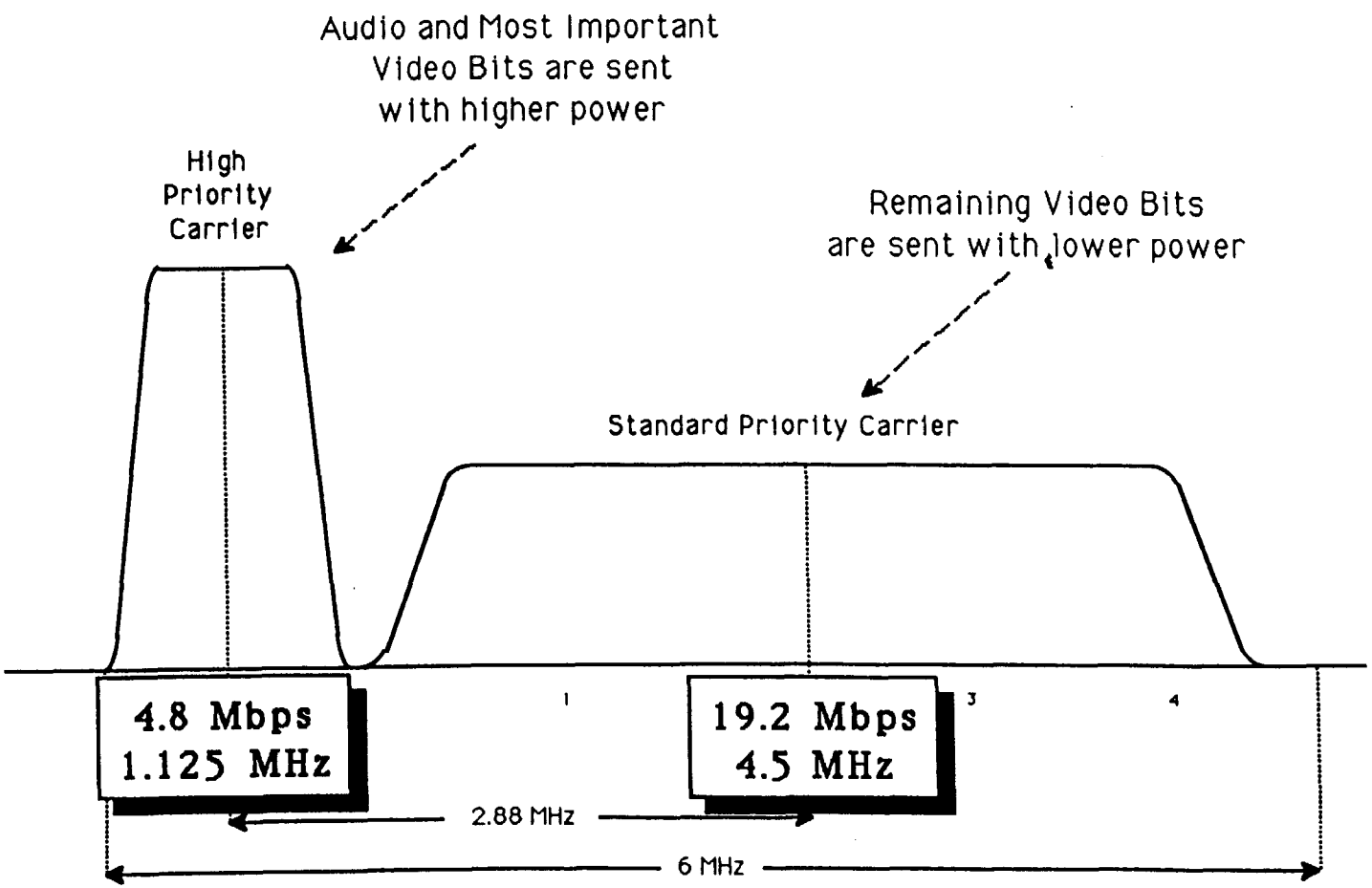

- Total data rate 24 Mbps
- Net data rate 18.5 Mbps

ATRC

Transmission Specifications

Spectrally Shaped QAM – two trellis coded 32-QAM carriers

High Priority Carrier		Standard Priority Carrier	
Symbol rate	0.96 MHz	Symbol rate	3.84 MHz
Bandwidth	1.125 MHz	Bandwidth	4.5 MHz
Data rate	4.8 Mbps (3.7 net)	Data rate	19.2 Mbps (14.8 net)
Threshold CNR	11.1 dB	Threshold CNR	16.1 dB

Overall SS-QAM signal

Channel Bandwidth	6 MHz
Data rate	24 Mbps (18.5 Mbps net)
HP:SP power ratio	5 dB

..TRC

SS-QAM and NTSC Spectra

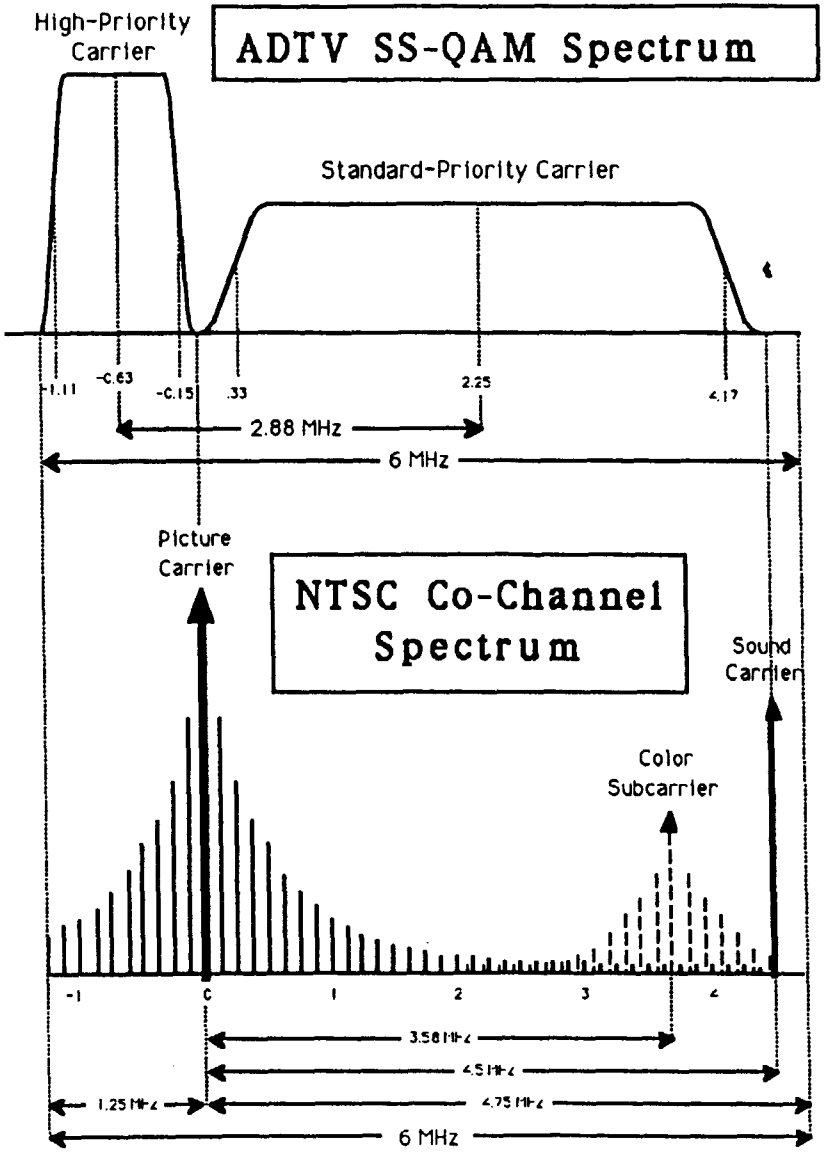

ATRC

Coverage Area

ATRC

Coverage Definition for Simulcast

- Applying NTSC coverage area rules (90% time availability at the fringe of the defined coverage area) without some additional condition on robustness is inappropriate for a digital system

- 90% time availability for full-quality HDTV service should be acceptable, IF...

- Sound and a viewable picture have very high (97-98%) time availability

- Increasing a signal's time availability from 90 to 97.7% requires 5 dB additional power density -- ADTV provides this margin by design

ATRC

BER vs. CNR Performance

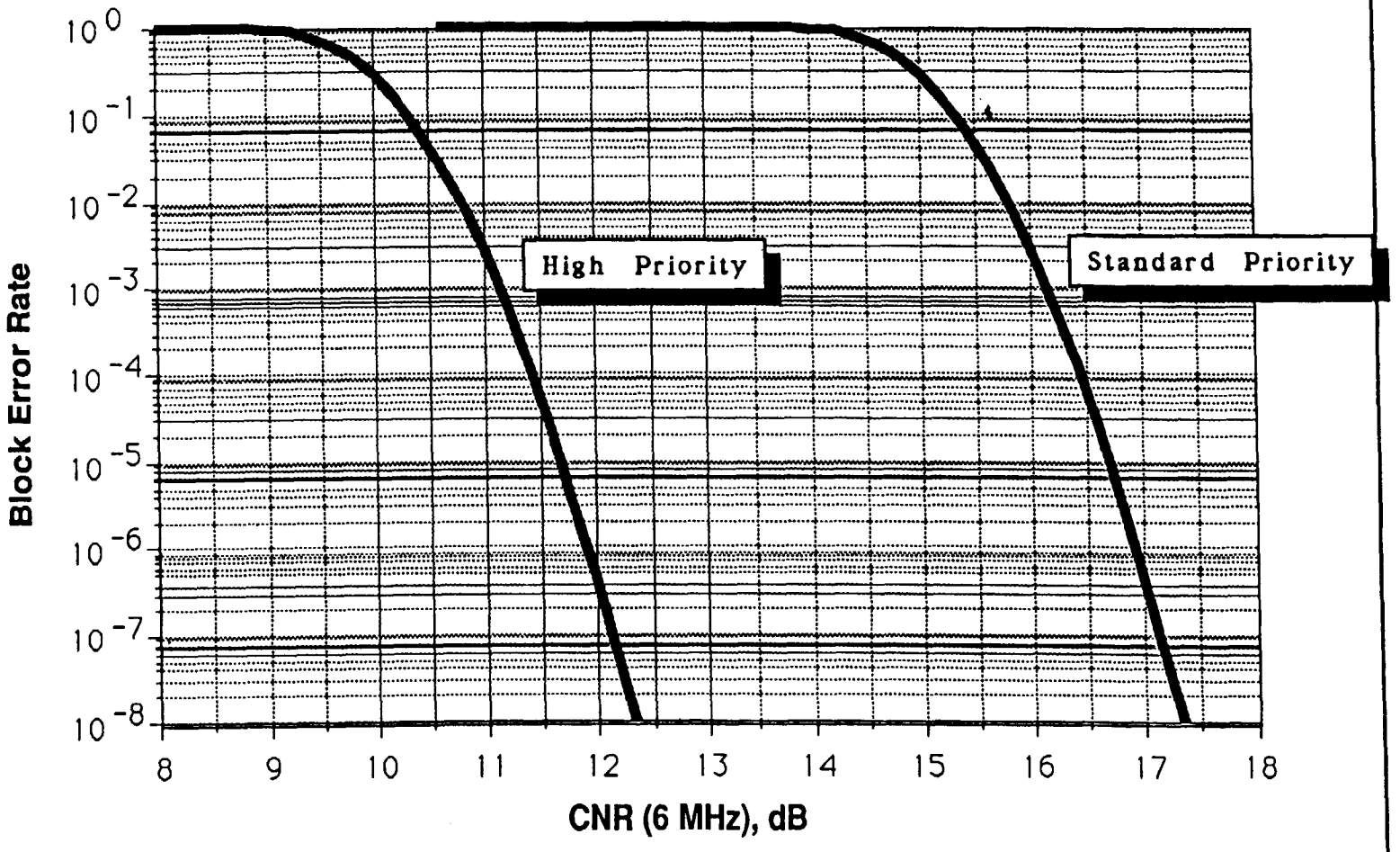

Coverage Area Strategy

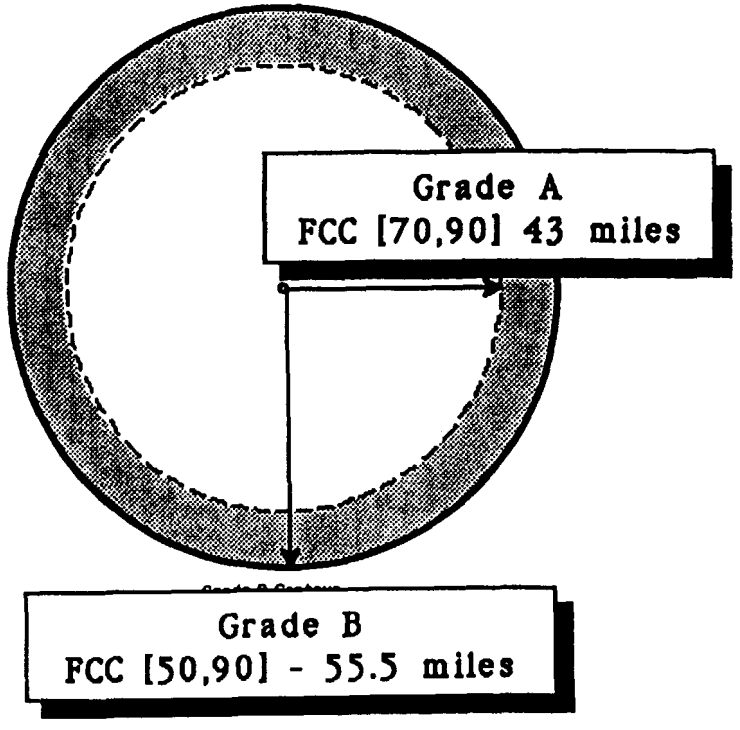

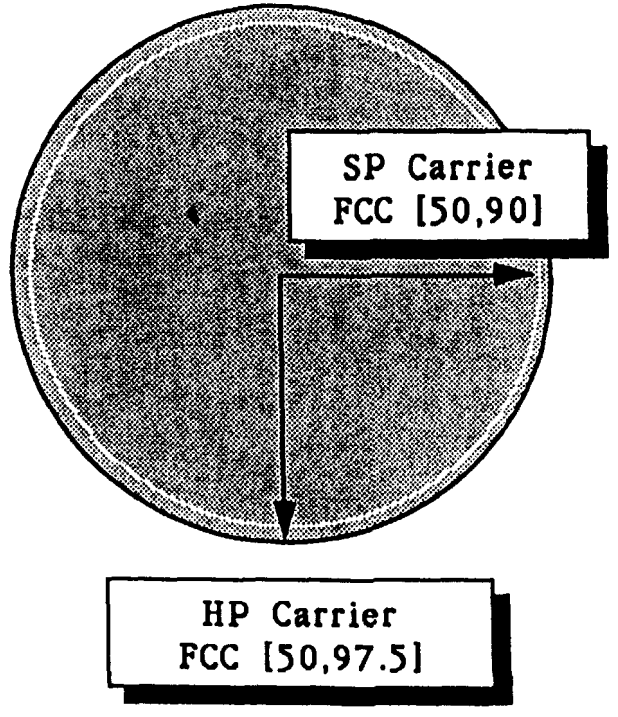

The defined coverage area of an NTSC station is based on 90% time availability of "acceptable quality" video at the Grade B contour. The more rugged performance of sync and sound are essential elements of NTSC's overall reliability and robustness.

The coverage area of an ADTV station is based on 90% time availability of its standard-priority carrier. The higher power high-priority carrier ensures reliability and robustness.

ATRC

ADTV Coverage Area Example #2

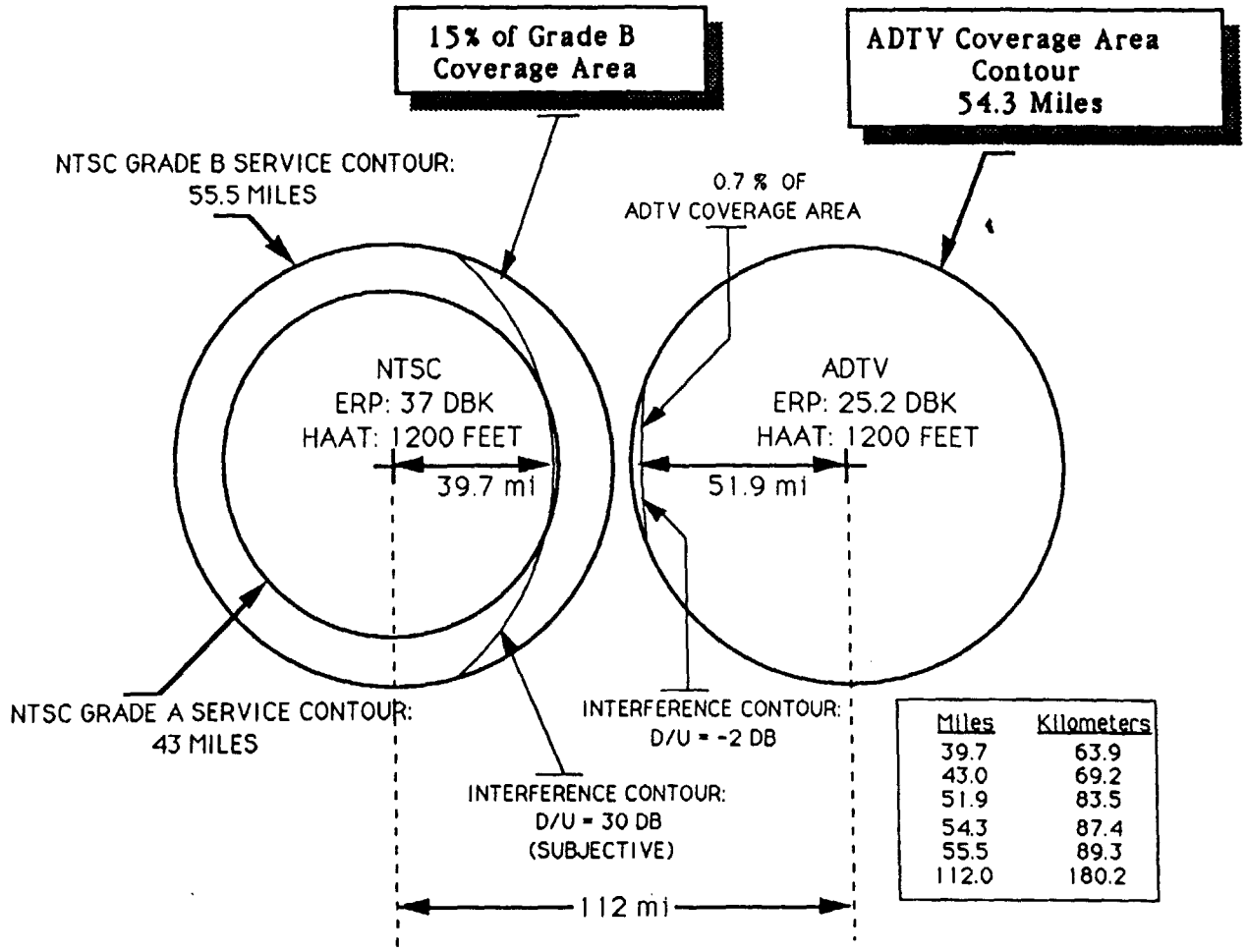

Miles	Kilometers
39.7	63.9
43.0	69.2
51.9	83.5
54.3	87.4
55.5	89.3
112.0	180.2

NTSC and ADTV Co-Channel Transmission with 112-Mile Station Separation.

Coverage Area Conclusions

- Average coverage area results indicate that a noise limited range of 55.5 miles can be provided with a co-channel spacing of 115 miles (97.5% accommodation)
- Broadcasters in especially difficult co-channel situations can reduce coverage area, or they can slightly reduce their picture quality and use ADTV's 16-QAM option. Average coverage area results indicate that this provides a noise limited range of 55.5 miles with a co-channel spacing of 105.6 miles (98.8% accommodation)
- For ADTV & NTSC co-channel separation larger than about 112 miles, essentially none of the ADTV coverage area is lost as a result of NTSC interference.
- ADTV provides coverage area that is superior to NTSC in situations where co-channel constraints are not present.

Summary

ATRC

ADTV System Overview

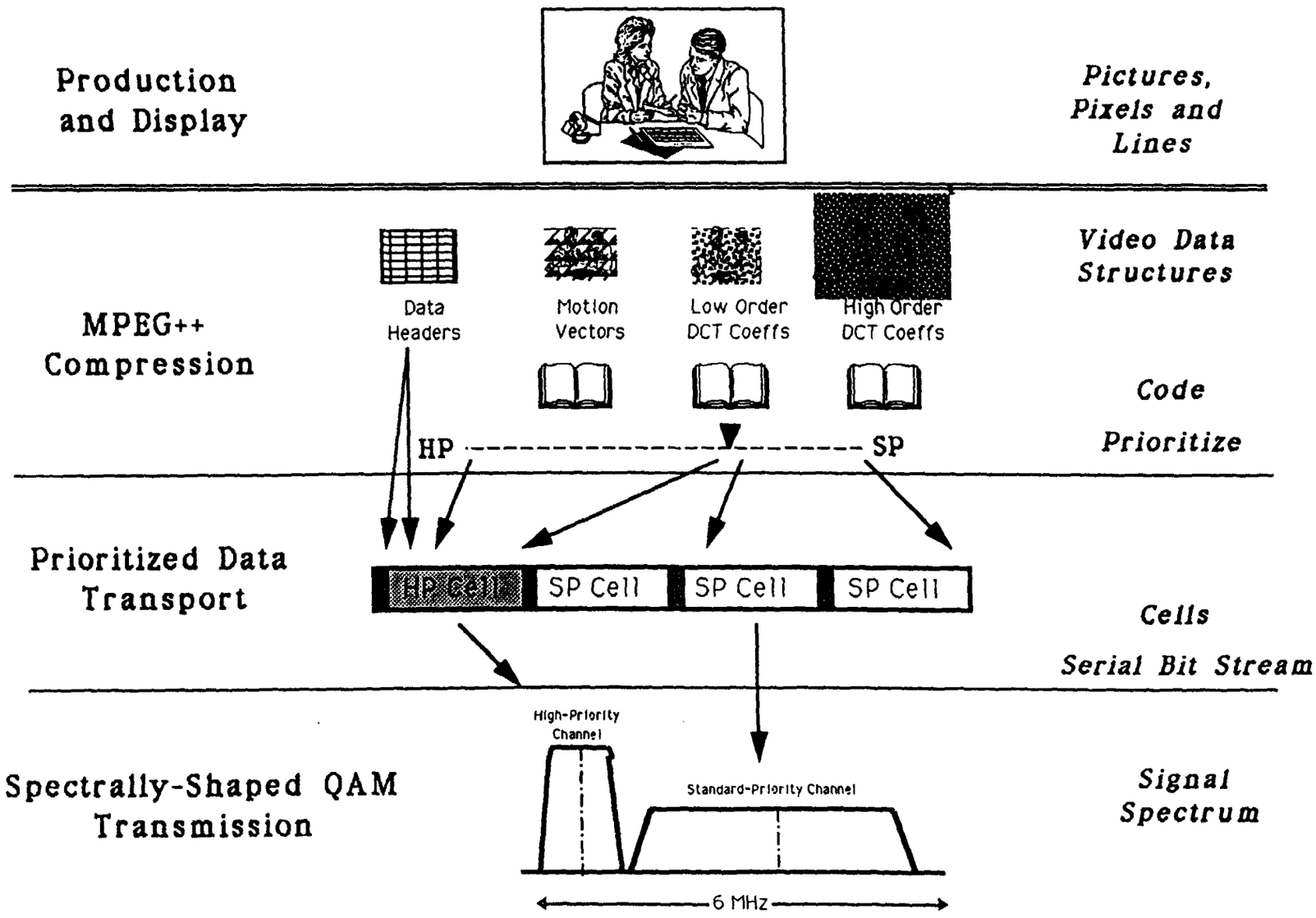

ATRC

ADTV System Block Diagram

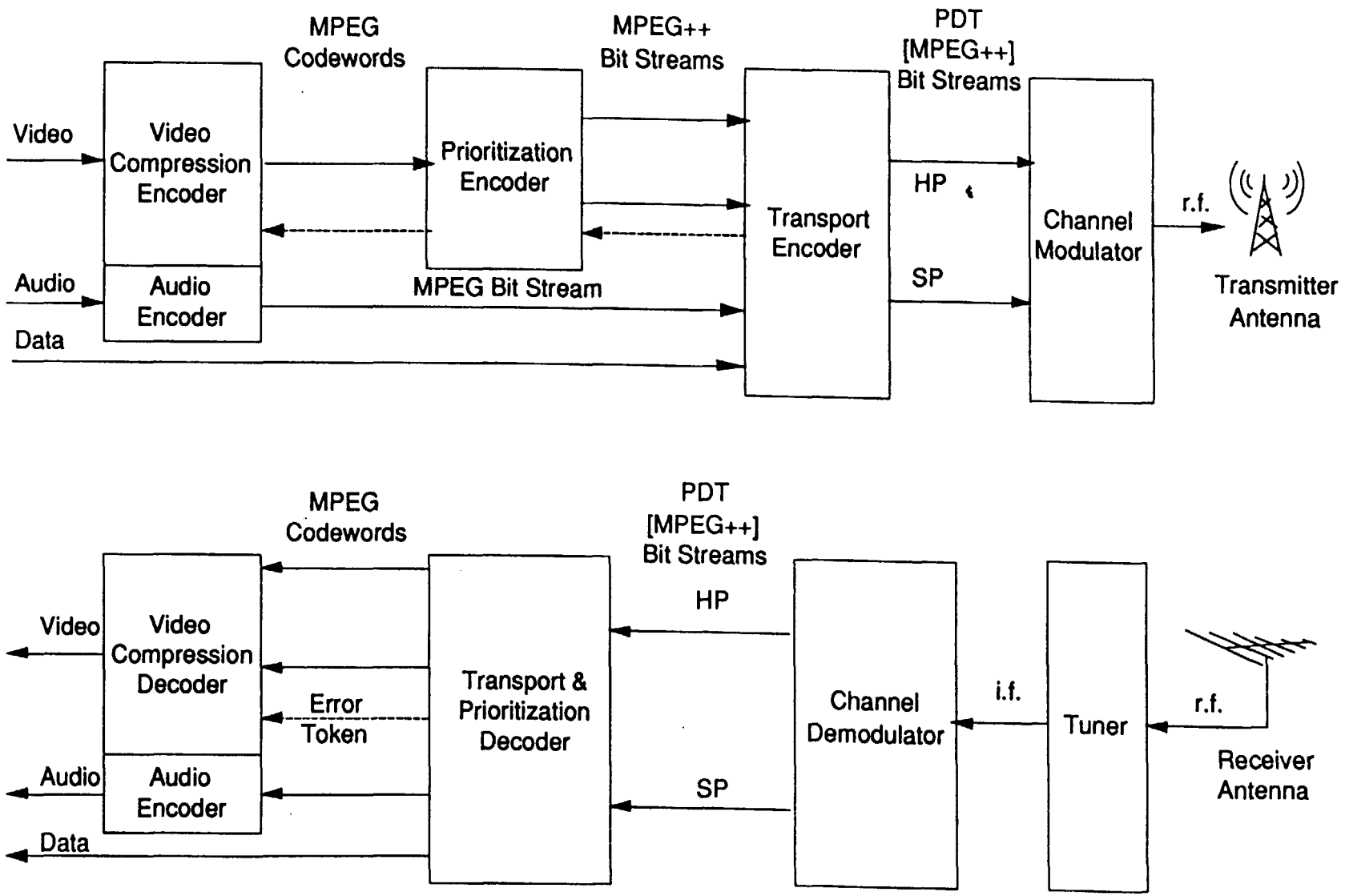

Interoperability

- Two video formats (and additional MPEG flexibility)
  - 1440 x 960 perceptually square display pixels
  - 1440 x 810 provides logically square image pixels

- Interlaced & progressive scan - frame based coding
  - 1050/2:1/59.94 HDTV
  - 1050/1:1/24 film
  - 1050/1:1/29.97 "mixed-production"

- MPEG-based compression provides the possibility of direct interchange of compressed data among HDTV and multimedia applications

- ADTV provides interoperability at any of its layers

Extensibility

- Flexibility in the mix of video, audio and data
  - there are no predetermined data rates

- The service mix can be dynamically allocated
  - well-suited to multimedia applications
  - can fundamentally change the nature of TV programming

- Open-ended extensibility
  - receivers disregard cells of inappropriate service types
  - no backward-compatibility burden for new applications
  - can compatibly introduce new features and services

Low Cost

- Standards are the most important factor in reducing cost
  - single decoder for the consumer
  - production volumes and economy of scale

- Memory is already commodity-priced. ADTV's format allows a frame to be stored in a 16 Mbit DRAM
  - these are predicted to cost about $13 each in 1996

- MPEG was designed for digital storage media -- it is a good basis for VCR
  - periodic I-frames allow search modes and random access

- Prioritized Data Transport format is similar to B-ISDN
  - opportunity to use B-ISDN interface ICs

ADTV Features

- Multiple video formats that:
  - support both film and HDTV production
  - support both television and computer applications (both interlaced scan and progressive scan/square pixels)

- Data compression that:
  - achieves outstanding picture and sound quality
  - is compatible with international standards
  - is practical for broadcasting (survives uncorrectable bit errors)

- Digital transmission that:
  - provides a high 24 Mbps data rate
  - is immune to NTSC interference and friendly to existing stations
  - provides a large coverage area (comparable to NTSC)
  - provides reliable fringe area service

- A system that:
  - has a broad scope of services
  - has interoperability with film and computers
  - has extensibility for future growth

Sarnoff
RESEARCH CENTER

An MPEG-based Digital Infrastructure

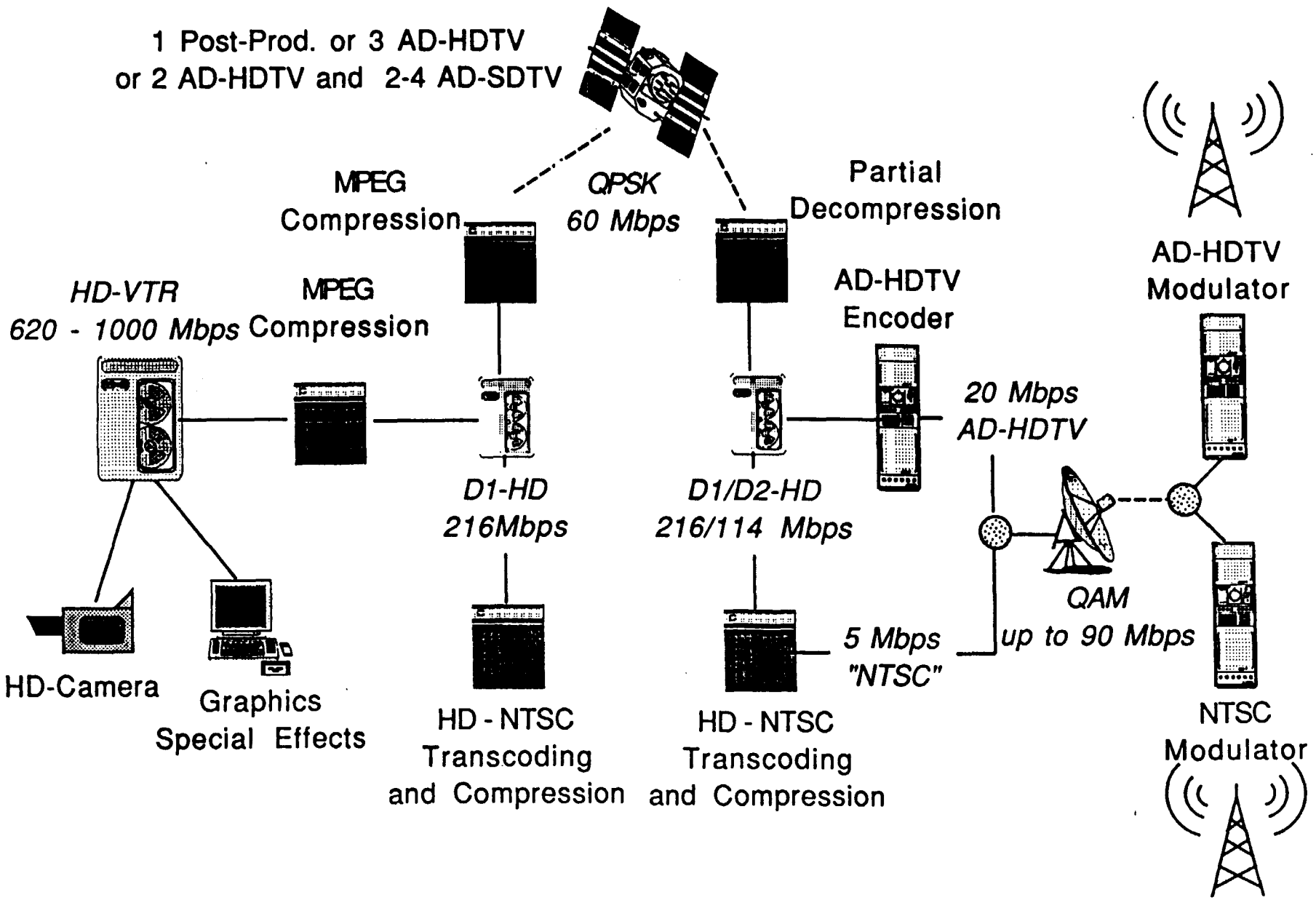

Sarnoff RESEARCH CENTER

An Alternative Local Station Infrastructure

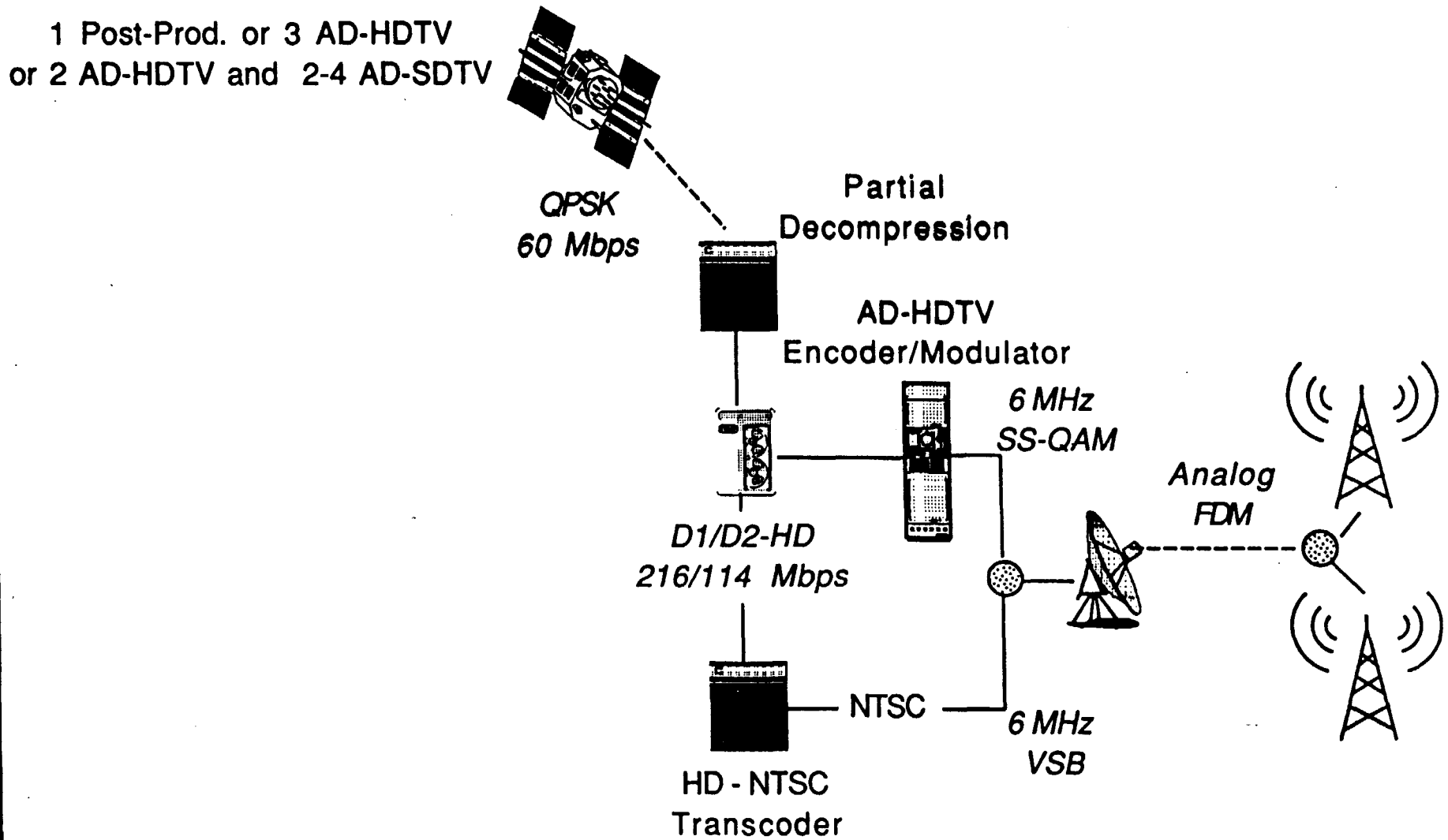

25 MAR 92

DEPARTMENT OF ELECTRICAL ENGINEERING AND COMPUTER SCIENCE

MASSACHUSETTS INSTITUTE OF TECHNOLOGY

CAMBRIDGE, MASSACHUSETTS 02139

March 20, 1992

Mr. S. Merrill Weiss
Vice Chairman, IS/WP-2
25 Mulberry Lane
Edison, New Jersey 08820-2908

Dear Merrill:

This letter is in response to the questions in your letter of February 17, 1992. The name of our system is "Channel-Compatible DigiCipher" HDTV system.

General

1. Yes, extensibility is an important component of our system. In our system, extensibility has been ensured by source-adaptive processing and by using the concept of header information. The transmitter provides in the header the information necessary for the receiver to decode the data.
2. We estimate a maximum of four months. Depending on the technical details required, we may need significantly less than four months.
3. Both MIT and General Instrument have experience in licensing and technical support. We are communicating with manufacturers for licensing and technical support.
4. General Instrument has in-house VLSI design capability. We are negotiating with IC vendors for supplying chips for our system. The chips made by IC manufacturers are expected to be widely available.
5. The trigger point will be the earlier of the following two events:
   (a) The ATTC test results show, in our judgment, that our system is better than others.
   (b) Our system is chosen for field testing. One suggestion for a possible head-start is to make the ATTC test results of all systems available as soon as possible.

Broadcast

1. In the UHF band, equal coverage to NTSC occurs with an average ERP of 26.5 dBk for 32-QAM, and 22.5 dBk for the 16-QAM mode, as compared to 37 dBk NTSC peak power. For low band VHF, we estimate 4.5 dBk (32-QAM) and 0.5 dBk (16-QAM), as compared to NTSC at 20 dBk. For high band VHF, we