In contrast to cable and broadcast electronic networks, video stores are parts of a hard-copy distribution chain that includes program producers and distributors upstream and a VCR machine downstream in the home. Film from old stock or new releases is converted to programmed videocassettes (now almost exclusively in a VHS format) and physically transported to local distribution centers. Consumers themselves provide for the physical movement of the program material from local video stores to households. Thus, "homes passed" by this physical distribution system are reckoned by considering the number that are conveniently near a video store.

Several important changes to this videocassette network are required if consumers are to use it to access HDTV compatible programming:

-- Conversion of existing 35mm feature films into an HDTV format and/or production of new material in a compatible format;

-- Willingness of local video stores to stock HDTV videocassettes; and,

-- Investment by households in HDTV compatible VCRs <u>and</u> receivers.

The first requirement, that titles in current libraries of 35mm film be converted to HD, is a process that is, apparently, both technologically and economically feasible. Kodak has recently announced a new telecine that it claims will perform this conversion at low cost, while preserving high technical quality in the converted material. The extent to which new productions might be recorded in HDTV rather than film is still being debated in the production community, but will be driven by evolving economic opportunities offered by adoption of the technology. Since the industry has invested substantially in 35 mm cameras and related production equipment, it is not likely to strand that investment all at once to convert to an HD production mode. A more likely scenario is that the industry will complement its existing capacity over time with a selective HD capability. There are studios now that specialize in recording visual materials in an HD mode and these will be expanded and joined in time by others as the market develops.

The extent to which video store owners are willing to stock HD cassettes is more problematic. Video store owners are confronted by the same "chicken and egg" dilemma faced by broadcasters and cable operators. Until the installed base of technology in the home reaches some critical mass, there is little economic incentive for the store owner to sacrifice valuable shelf space and to incur the inventory costs associated with stocking HD videocassettes.

The financial burden directly borne by households and consumers of the transition to an HD environment, is greater in the videocassette technology case than it is for the broadcast and cable technology cases. To view cable or broadcast originated HDTV programming, the consumer must buy only an HDTV compatible receiver. However, to play back an HD videocassette, the consumer must buy both a receiver and an HDTV compatible VCR. In effect, adoption of the videocassette/recorder technology to distribute HD materials shifts most of the investment burden from the owners of local distribution networks to the manufacturers of equipment and ultimately directly to households.

The shift of investment burden creates some interesting implications for the rate and structure of the adoption of HDTV technology. Adoption of the VCR-videocassette technology requires substitution of an HDTV compatible VCR inside the household, in place of substantial revisions to existing electronic networks.

A large proportion of the costs of upgrading broadcast stations and cable networks is common and shared by all households within the reach of those improvements. The costs of making available HDTV compatible VCRs are structured very differently. VCR-HDTV equipment can be made available to subsets of the households within a market area without incurring all the costs necessary to make the service available to all of them.

Furthermore, the costs of upgrading a local cable or broadcast network must be recovered, for the most part, by services generated within that particular local area. For the VCR technology based case, the potential market is national (and maybe even international) so that the common costs can be spread over a larger population and thereby diminished in their impact in any given area or on any given household.

These considerations suggest that one scenario for the penetration of HDTV technology may involve early adoption by households who purchase both a VCR and an HDTV compatible receiver. Given the availability of pre-recorded materials to support them, sufficient penetration of VCR-receiver tandems may occur so as to make it more attractive for owners of local networks to create an HD capability to take advantage of the installed base.

The missing piece to this puzzle is the availability of preprogrammed HDTV videocassettes. The willingness of local video stores to provide those is uncertain. One indication is the fact that many video stores now stock laserdiscs, even though fewer than a half million players have, according to EIA, been sold nationwide. Furthermore, the trend toward software/hardware integration (most notably illustrated by Sony's acquisition of

Columbia) suggests that in the next 5-10 years it might make sense for Sony (and others perhaps) to support their hardware sales by making sure that the requisite software is available -- either through incentives to existing video dealers, or by setting up an alternative distribution network.

Other Distribution Systems--Direct Broadcast Satellite

The following developments may account for increased optimism about the prospects for DBS. First, satellite dish sizes have decreased over time to meet consumer needs for smaller (18") dishes. In the early years of DBS, the dish sizes were typically much larger, thereby posing some constraints for consumers, particularly those in urban areas. Second, digital signal compression technology has increased the potential capacity of satellite transponders to permit DBS to offer many more channels today than in the past. This factor, of course, is neutralized somewhat as a competitive factor, as cable, and perhaps broadcast television providers, will potentially benefit from these technological advancements as well. Third, program access for satellite providers appears to have improved. Finally, cable television rates have increased, and consumers have voiced their discontent with cable system customer service. Some analysts predict that a significant number of DBS subscribers may be harvested from the ranks of dissatisfied customers of cable television systems.

A remaining significant factor to be taken into account in considering the future of DBS is the "upfront" cost to consumers of satellite receiving equipment -- a dish, a decoder and associated electronics. These costs will vary with a) the power of the transmitting satellite (higher satellite power means smaller and cheaper receivers), and b) the size of the market combined with the degree of production economies (more volume means lower prices).

In addition to DBS service discussed above, the low-powered fixed satellite television receive-only service was initially spawned by cable program distribution to cable headends via satellite. These signals were available, free of charge, to owners of large satellite dishes. Subsequently, many of the more desirable programmed signals have been scrambled by the program providers, who now offer a package of programs and the required "descrambling" equipment to earth station owners. This existing service is, however, quite remote from the DBS systems initially proposed a decade ago, inasmuch as the proposed systems were to use high-powered satellites, and small earth stations, and were to provide new programming services, as opposed to merely providing a new delivery mode for existing program services.

Currently both cable originated and broadcast originated programming is available over low power (C-Band) satellites

transmitting to large TVRO antennae. Households not passed by cable would be prime targets for satellite distributed cable television programs, but those now constitute less than ten percent of all TV households in the United States. Moreover, it is not clear under what conditions the owners of cable programming would make it available to Ku-Band DBS operators.

DBS as an HDTV Delivery System. Some have argued that DBS will be one of the first media to offer HDTV. The marginal cost to a DBS operator of providing an HDTV signal is likely to be quite low, given the existence of the satellite and its use in providing other services. This will be particularly true to the extent that digital signal compression permits channel multiplication -- in which case the revenues foregone by converting the least profitable NTSC programmed channel (assuming all channels are programmed) may be minimal. In this case, the main HD related cost would be in the additional ground-based electronics required to get the HD signal up, down and on the screen. Moreover, to the extent that DBS is attempting to attract dissatisfied cable customers, it will have a strong incentive to provide extra value or to otherwise differentiate its service from cable. HD programming may provide such a marketing tool.

Manufacturers of HDTV-Related Equipment

The equipment manufacturing sector has a dual interest in the development of HDTV, inasmuch as it will be a supplier of two general categories of equipment necessary for the development of a widespread HDTV services marketplace. The evolution of HDTV will require substantial expenditure for production, transmission, and consumer electronic equipment. The former will be required by both program producers and broadcast stations, while the likely penetration of HDTV receivers and VCRs gives an indication of the potential consumer electronic market.

The order of magnitude of the potential stake of manufacturers with respect to production/transmission equipment was indicated in TABLE 6 above, in which the total cost for all broadcasters to establish a fully functional HDTV capability was estimated at nearly $10 billion. Most of that -- probably two thirds or more -- will be for equipment. Nor is that all. The networks will have to upgrade to provide HDTV feeds and production studios will also have to obtain equipment sufficient to provide them with an HDTV studio production capability. Thus, even without considering consumer HDTV equipment, it is clear that video equipment manufacturers are looking at some large net additions to sales.

Several studies are available of the potential market for HDTV-related consumer electronics products. Original studies have been undertaken by the National Telecommunications and

Information Administration (NTIA) of the Department of Commerce; by the American Electronic Association; and, by the Electronic Industries Association. Having been widely circulated and critiqued, these studies have provided a starting point for numerous other estimates of the potential size and scope of markets for household HDTV products and services.

These studies have been inspired in large part by concerns over the economic consequences to the United States of participation by domestic firms in HDTV equipment manufacturing. Thus, the driving force for much of the interest in HDTV has been its potential impact on broader macro-policy goals related to international competitiveness, jobs, national security, and technology leadership in commercial electronics -- computers, semiconductors, video displays.

Given the focus of most previous HDTV market studies, it is not surprising that the subject of the present report -- the ability and incentive of broadcasters and others to build the capacity to transmit HDTV signals to the home -- has been for the most part neglected. Indeed, the studies of household adoption of consumer electronic products simply assume, either implicitly or explicitly, that programming and program distribution networks will be sufficiently developed to support the forecast of rapid diffusion of consumer electronic products. Thus, for example, a widely cited study of HDTV's potential impact in the U.S. performed for the American Electronics Association addresses the issue very simply: "...HDTV broadcasts are assumed to start in the U.S. in 1993." That's it!

Another study performed for the Electronic Industry Association says nothing specifically about program transmissions, but states that, "Compatible programming and software will be available as HDTV products are introduced in the market."

Notwithstanding the common practice of ignoring the economic dynamics of the construction of HDTV program distribution networks, the estimates of potential market demand and sales of consumer HDTV equipment -- receivers and VCRs -- indicate a potential market of enormous value, if the distribution channels are in fact made available. Most of the studies of HDTV-related consumer electronics sales report simulations of potential household penetration diffusion rates, based on the historic patterns of adoption of successful products -- principally color television, but also VCRs, home computers, compact discs and others. And, these growth paths generate very large market volumes and values over time.

For example, the American Electronics Association estimates that the market for HDTV receivers in the United States will have a cumulative value of over $50 billion between the years 2000 and

2010. That is nearly a third of the AEA projected world market of $170 billion over the same period. In addition, the AEA also foresees about $32 billion in sales of HDTV video cassette recorders during the decade 2000-2010. Thus, the AEA estimates suggest that some $82 billion ($50 billion for receivers, plus $32 billion for VCRs) of consumer electronics sales, in the second decade from now, are contingent on the development and widespread availability of high quality HDTV program distribution networks.

The Electronic Industries Association expects the HDTV receiver market in the decade after introduction (1993-2003) to total over $143 billion. They make no projection of HDTV-VCR sales, but an illustrative figure of about $80 billion can be derived by applying the ratio of sales of receivers to VCRs projected by the AEA.

Our study for NTIA indicated that a variety of salutary market and regulatory conditions could combine to provide the basis for total sales of HDTV receivers and VCRs varying from $72 billion to $145 billion in the decade between 1998 and 2008. (See Appendix C).

The size of the stake of television equipment manufacturers is further documented by the fact that some of them have already expended substantial resources on research, development, prototype testing, and other activities related to HDTV equipment and services. Indeed, some have argued that the whole HDTV phenomenon is the result of a technology push from companies that have incurred substantial sunk costs in developing it. Reliable estimates of the amounts already expended in HDTV related activities are hard to come by, for obvious reasons. Nevertheless, in its study of high resolution video systems, the Office of Technology Assessment of the Congress of the United States has stated that "The experts -- the managers of many of the world's consumer electronics firms -- have already bet more than $1 billion that there will be a big market for HDTV." (OTA, at 84) Others have suggested that Japanese interests alone have expended substantially more than even that. (See OTA, at 30)

The thrust of these studies consistently supports several propositions of consequence for our purposes here. The potential revenue generated for manufacturers of HDTV related consumer electronics equipment is quite substantial, and is over and above the potential sales of HDTV studio and production equipment. These potential sales cannot, however, be realized without substantial companion investment in distribution network infrastructures and the timely development of suitably formatted programming.

Summary. Our review of other groups with a potentially strong economic interest in the development of HDTV (stakeholders) indicates that early and extensive broadcaster implementation of HDTV technology will create spillover benefits for other players. These benefits will accrue to industry groups that are both complementary to and competitive with traditional broadcast interests.

To illustrate the potential value to receiver manufacturers consider that, if, as suggested in recent studies, the cumulative market value of HDTV receivers and VCRs reaches $100 billion over the next fifteen years, then approximately 50 percent household penetration of this equipment will be required. That level of household adoption of HDTV receivers is almost certainly not attainable in that time frame without a substantial presence of broadcast HDTV transmissions in the top hundred broadcasting markets.

The development of broadcast HDTV transmissions may also create value for program producers and program rights holders. The amount of value created depends, in part, on the extent to which construction of HDTV facilities creates demand for HDTV formatted programming. Such demand will add value to the inventory of existing program titles according to the cost of converting the existing inventory of programming to an HDTV format. Additional value for program suppliers will depend on the extent to which broadcast HDTV transmissions increase HH HDTV penetration and thereby increase demand for HD programming by other media outlets.

In the case of color television, these externalities were internalized by RCA, by virtue of its integration of all three sectors under a single ownership. Thus, RCA was in a position to capture all the values generated by investment in each of the individual sectors and thereby was spared the externality problem faced by local stations that implement HDTV.

Today, RCA is no longer in the broadcast equipment manufacturing business and its programming arm (NBC) has a much smaller share of the total programming market. Indeed, while there has been considerable vertical integration among equipment manufacturers, programmers and non-broadcast distributors (cable, VCRs), there has been very little vertical integration involving the broadcast industry. Moreover, because of legal and regulatory restrictions such as the statutory alien ownership limits and the FCC's financial interest and syndication rules and multiple and cross-ownership rules, no appreciable increase in vertical integration can be anticipated in the relevant time frame.

Ironically, in addition to creating value in complementary sectors (programming and equipment manufacturing), broadcast

investment in HDTV will also create value in competitive sectors, i.e., for other distribution media -- cable television, satellite, and VCR/preprogrammed cassettes. These "second order" externalities occur as greater broadcast investment stimulates investment by households and programmers in good/services that will increase expected HDTV-related earnings to cable systems, as well as satellite and VCR-related distribution systems. By bearing the high risks of early HDTV investment, broadcasters would bear the costs of stimulating HDTV receiver penetration, and would pave the way for HDTV market entry by their competitors.

VI. CONCLUSION

Given the uncertainty about consumer demand for HDTV products, receiver prices, service/picture quality, etc., there is substantial risk of no earnings and capital loss associated with HDTV-related investment. Reasonable minds might differ on the expected result of undertaking a particular investment, but there can be no disagreement that there is always the chance that an unexpected, undesirable result will occur. In the HDTV context, investors faced with market uncertainty must determine if the potential payoff justifies the associated risk.

It is important that the Commission be aware of this risk and take it into account in its rules. If the Commission underestimates this risk, it may distort market-based investment incentives and thereby undercut its own policy objectives and goals.

The Commission's tentative rules would require broadcasters to construct an HDTV transmission capability well before other parts of the necessary infrastructure (programming and household receivers) have developed. By placing rigorous requirements on broadcast investment, the Commission may force some stations to forego investment they might otherwise have made, while forcing others to make unduly risky investments that might well undercut their ability to sustain fully their NTSC service. In view of the investment risk faced by broadcasters, the Commission should consider carefully the implications of prescribing a rigid program of capital formation for broadcasters.

In effect, the Commission's tentative rules would set up powerful non-market pressures for broadcasters to invest in the face of enormous uncertainty about the likely return of such investment. In light of the foregoing consideration of broadcast-HDTV capital costs, risks, burdens, and HDTV-related market externalities, the Commission's tentative rules appear to promise significant "risk-shifting" to broadcasters from other stakeholders (who remain in a position nevertheless to capture a substantial part of the benefit from broadcaster risk taking).

The "risk-shifting" aspects of the Commission's proposals will benefit program suppliers and manufacturers of HDTV receivers, production, and transmission equipment, as well as other potential distribution media -- cable, DBS, etc. The proposed rules will create value for other stakeholders, while forcing broadcasters to sustain much of the cost burden related to the investment risk.

APPENDIX A

HIGH DEFINITION TELEVISION

Member/PBS Transition Planning

Introduction

Each television station in America has a different station configuration and is in a unique competitive situation. Each station will have to examine its own situation in light of the many factors in order to decide what role it wants to play in the area of Advanced Television.

This document attempts to present some rudimentary and preliminary cost factors that will help stations to estimate the expense to add an ATV simulcast system. This is intended to be a shopping list with some basic groupings so that station general, financial, production and engineering managers can begin to develop long range strategies which would allow a manageable and graceful transition into ATV.

Much has been made in recent times about the high costs of advanced television. What has not been discussed is that these investments can be made over a many year period. Also not stated is that many of the high costs can be attributed to high research and development costs that must necessarily be absorbed through initial product sales. As time goes on, the technology of manufacturing and the equipment itself will improve and the costs will go down. Finally, costs generally refer to wide bandwidth major studio production equipment. As ATV develops, new more limited bandwidth equipment will need to be developed for local broadcast stations so that it can be produced at a lower cost. A few items of such equipment are already beginning to appear at HDTV trade shows. Others are now being discussed by equipment manufacturers and PBS is urging these manufacturers to complete the development of such products.

I. Tower Site/System

A. New Tower Site:

Land (50 acres)	$500K
Site Development	$100K
Access Road	$900K
Soils and Survey	$10K
Electric (substation and generator)	$400K
Tower & Installation (1000')	$500K
Total	$2,410K

B. Existing Tower Site, New Tower:

Access road	$150K
Soils and survey	$10K
Electric (substation and generator)	$400K
Tower & Installation (1000')	$500K
Total	$1,060K

C. Existing Tower Site, Existing Tower:

Major modifications	$100K

D. Existing Tower Site, Existing Tower:

Minor modifications	$10K

II. Transmitter Building

A. New building(1500 sf)	$113K
B. Existing building, addition(500 sf)	$38K
C. Existing building, minor modifications	$10K

III. Legal Consultation

A. No dedicated action	$5K
B. Complaints, no court action	$50K
C. Complaints, court action	$500K

IV. Engineering Services

A. Antenna systems design	$36K
B. FAA & FCC Application/Followup	$50K
C. Tower Application/Followup	$8K

V. Transmission Plants

A. VHF Low Band Transmission Plant, 10KW ERP, with:

Transmitter - 2 KW, installed	$150K
HDTV Encoder (or Format Converter/Modulator)	$100K
Remote control system	$30K
Antenna	$250K
Transmission line (1000')	$50K
Antenna/Line Installation Services	$50K
Test Signal Inserter	$26K
Test Equipment	$65K
Precision Demodulator	$22K
Demultiplexer	$15K
HD Color Monitor 14"	$11K
HD Precision Waveform Monitor	$12K
HD Signal Monitor	$20K
Audio Processing	$6K
Audio Monitoring	$10K
Total	$817K

B. VHF High Band Transmission Plant, 30 KW ERP, with:

Transmitter - 5 KW	$200K
HDTV Encoder (or Format Converter/Modulator)	$100K
Remote Control System	$30K
Antenna	$250K
Transmission line (1000')	$50K
Antenna/Line Installation Services	$50K
Test Signal Inserter	$26K
Test Equipment	$65K
Precision Demodulator	$22K
Demultiplexer	$15K
HD Color Monitor 14"	$11K
Precision WM	$12K
HD Signal Monitor	$20K
Audio Processing	$6K
Audio Monitoring	$10K
Total	$867K

C. UHF Transmission Plant, 150 KW ERP, with:

Transmitter - 20 KW	$300K
HDTV Encoder (or Format Converter/Modulator)	$100K
Remote Control System	$30K
Antenna	$250K
Transmission line (1000')	$80K
Antenna/Line Installation Services	$50K
Test Signal Inserter	$26K
Test Equipment	$65K
Precision Demodulator	$22K
Demultiplexer	$15K
HD Color Monitor 14"	$11K
HD Precision Waveform Monitor	$12K
HD Signal Monitor	$20K
Audio Processing	$6K
Audio Monitoring	$10K
Total	$997K

Sample Transmission Package 1

10 KW ERP VHF, (Low Band) (best case)

Existing tower site

Existing Tower, minor modification	$10K
Existing building, minor modifications	$10K
Legal fees, no complaints	$5K
Engineering/antenna	$36K
Engineering/FAA&FCC	$50K
Engineering/tower	$8K
Transmission Plant	$817K
Total	$936K

Sample Transmission Package 2

10 KW ERP VHF, (Low Band) (worst case)

New tower site & tower	$2,410K
New building	$113K
Legal fees	$50K
Engineering/antenna system	$36K
Engineering/FAA&FCC	$50K
Engineering/tower	$8K
Transmission Plant	$817K
Total	$3,484K

Sample Transmission Package 3

30 KW ERP VHF, (High Band) (best case)

Existing tower site	
Exisiting Tower, minor modification	$10K
Exisiting building, minor modifications	$10K
Legal fees, no complaints	$5K
Engineering/antenna	$36K
Engineering/FAA&FCC	$50K
Engineering/tower	$8K
Transmission Plant	$867K
Total	$986K

Sample Transmission Package 4

30 KW ERP VHF, (High Band) (worst case)

New tower site & tower	$2,410K
New building	$113K
Legal fees	$50K
Engineering/antenna system	$36K
Engineering/FAA&FCC	$50K
Engineering/tower	$8K
Transmission Plant	$867K
Total	$3,534K

Sample Transmission Package 5

150 KW ERP UHF (best case)

Existing tower site	
Existing tower, minor modification	$10K
Existing building, minor modification	$10K
Legal fees, no complaints	$5K
Engineering/antenna system	$36K
Engineering/FAA & FCC	$50K
Engineering/tower	$8K
Transmission Plant	$997K
Total	$1,116K

Sample Transmission Package 6

150 KW ERP UHF (worst case)

New tower site & tower	$2,410K
New building	$113K
Legal fees	$50K
Engineering/antenna system	$36K
Engineering/FAA&FCC	$50K
Engineering/tower	$8K
Transmission Plant	$997K
Total	$3,664K

VI. Broadcast Origination/Studio Plant

MODEL #1 HDTV - PASS-THROUGH NETWORK PROGRAMMING

HDTV Broadcast Operations

1	Broadcast/routing switcher	$80K/each	$80K
4	HD color monitors 4 - 18"	$11K/each	$44K
	Video signal processing/distribution		$35K
1	Upconverter	$50K/each	$50K
1	Downconverter	$50K/each	$50K
2	HD Precision WM	$12K/each	$24K
2	HD Precision Signal Monitors	$20K/each	$40K
12	HD B&W monitors (8")	$2K/each	$24K
	Audio monitoring (4 ch.)	$10K/each	$10K
	HD Studio Test Equipment		$75K
	WB Oscilloscope	$15K	
	HD Test Generator	$26K	
	Bit Error Rate Analyzer	$12K	
	Tools	$15K	
	Misc	$7K	
1	Precision Demodulators	$22K/each	$22K
1	Demultiplexers	$15K/each	$15K

MODEL #1 HDTV - continued

HDTV PBS Feeds			
1	HD satellite receiver	$10K/each	$10K
1	HD character generator	$60K/each	$60K
1	HD still store	$70K/each	$70K
1	HD sync generator/pulse distribution	$25K/lot	$25K
1	HD Frame Synchronizer	$38K/each	$38K
HDTV Studio to Transmitter Links			
1	HD STL	$48K/each	$48K
		Subtotal	$720K
	Installation Materials (7%)		$50K
		Total for Model 1	$770K

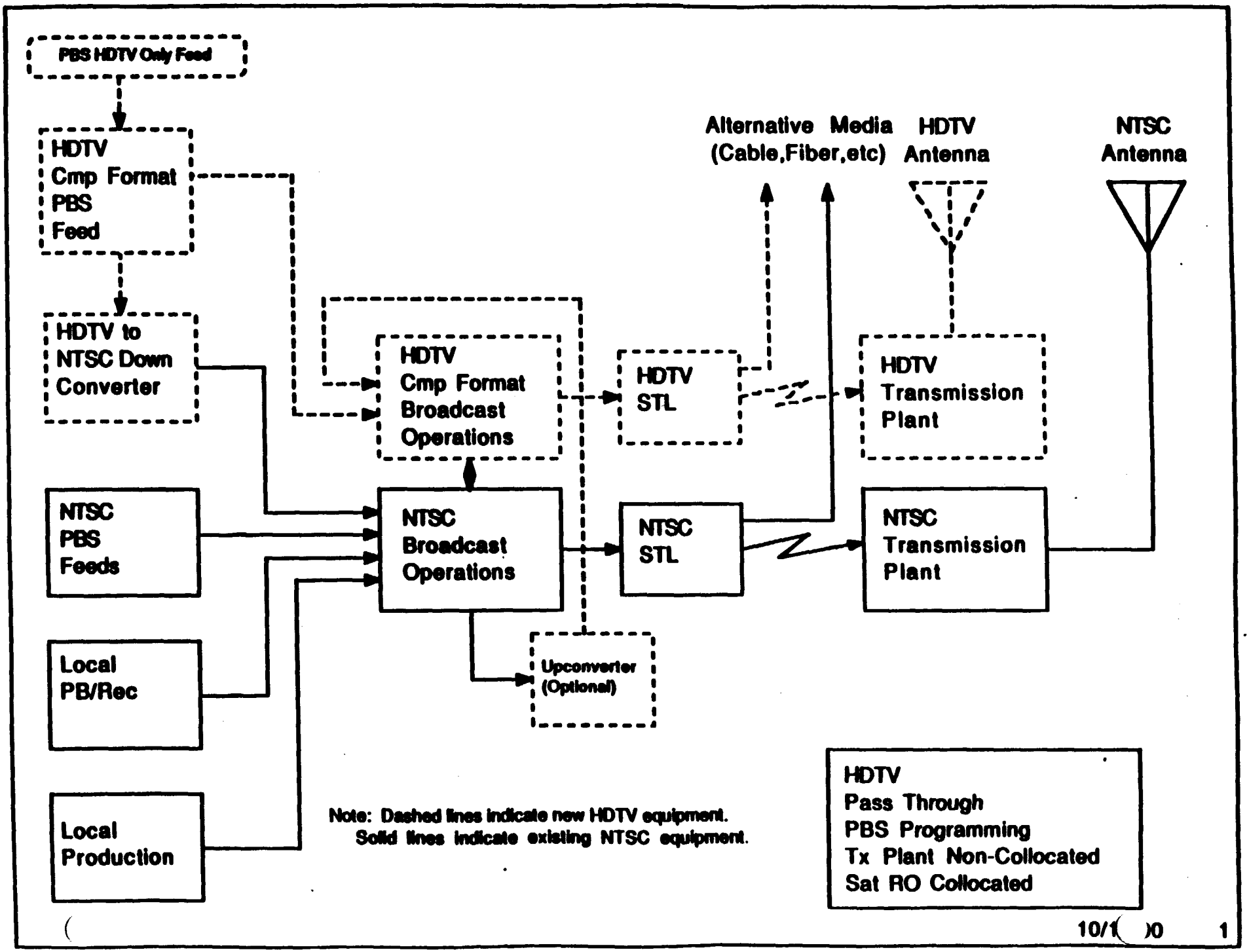
PBS HDTV Only Feed
HDTV Cmp Format PBS Feed
HDTV to NTSC Down Converter
HDTV Cmp Format Broadcast Operations
HDTV STL
Alternative Media (Cable,Fiber,etc)
HDTV Antenna
NTSC Antenna
HDTV Transmission Plant
NTSC PBS Feeds
NTSC Broadcast Operations
NTSC STL
NTSC Transmission Plant
Local PB/Rec
Upconverter (Optional)
Local Production
Note: Dashed lines indicate new HDTV equipment.
Solid lines indicate existing NTSC equipment.
HDTV
Pass Through
PBS Programming
Tx Plant Non-Collocated
Sat RO Collocated
10/1)0
1

MODEL #2 HDTV - LIMITED LOCAL PLAYBACK CAPABILITIES

4	HD compressed format VTR's	$80K/each	$320K
	Router Expansion for HD VTR's		$80K
8	HD B&W Monitors (8")	$2K/each	$16K
2	HD 14" color monitors	$11K/each	$22K
2	HD Utility WM	$6K/each	$12K
1	HD Precision WM	$12K/each	$12K
1	HD Precision Signal Monitor	$20K/each	$20K
	Subtotal		$482K
	Installation Materials (5%)		$24K
	Model 2 Total		$506K
	Total for Models 1 & 2		$1,276K