Although a complete discussion of locating and curing back feed problems in the distribution plant is beyond the scope of this document, it should be mentioned that single sources on a given trunk or distribution cable can be difficult to locate and isolate, multiple sources of back feeding can be very difficult to isolate. Technicians will necessarily have to use television sets to observe and clear sources of back feeding. As more customers begin direct connection, the number of back feeding incidents can be expected to increase substantially.

(2)Diagnosis

- Remove all cable connections, and connect a SLM to the input terminal of the television receiver to be connected directly to the system. Keep the test lead as short as possible and do not use push on connectors.
- Measure the amplitude of all local VHF off-air channels and note highest level.
- If a VCR is also to be connected directly to the cable, measure levels at the input terminal on it also.
- If the measured level exceeds -25 dBmV on any channel(s), the direct connection to the CATV system should not be made; a converter or isolation amplifier must be connected between the customer's equipment and the CATV system.
- Repeat the procedure for each outlet not using a converter. If an amplifier is installed, the preferred location is on the input side of any splitters that may be installed. With an amplifier located at the splitter input, it would be possible to connect equipment directly to any outlet without installing additional amplifiers. If the splitter is installed in a location where an amplifier connected to its input would be exposed to the elements, then the amplifier should be installed between the splitter output and the television set. This will necessitate the use of a separate amplifier for each outlet. If the need is demonstrated, we will begin development of a weather tight version which can be cable powered that could be installed before the splitters. This will necessarily include concurrent development of a power passing splitter.

B. Identification and Elimination of DPU in Television Receivers and VCRs

(1) Discussion

This phenomenon will be the one most often encounetereed since the inherent isolation of the system passives provide at least 20 dB of protection to other equipment connected to the cable. Measurements have shown the worst victims of DPU in present day equipment will be VCRs. Standards to raise the shielding of television receivers and VCRs are being promulgated by the EIA and NCTA. As they are placed in practice, we hope to see improvement in television receiver and VCR performance.

Unlike VHF broadcast television signals, which are ubiquitous, amateur radio and mobile service signals tend to be localized to an area in the near vicinity of the transmitter. Isolation of signals from mobile radios can be made by observing the picture when the offending unit is transmitting. This is almost impossible when the offending transmitter is in a vehicle. While DPU from television stations should be suppressed at least 45-50 dB below the television carrier, other types of interference need to be suppressed at least 55-60 dB.

(2)Diagnosis

- Disconnect all inputs from television receivers under test and terminate input connector if possible.
- Tune the receiver's channel selector to each local VHF channel and look for the presence of a picture.
- If a picture is observed on any channel, remove the terminator, connect the cable directly to the television receiver and look for a sync bar, echo or co-channel in the picture.
- If no sync bar, echo or co-channel is present, then the cable can be connected to the television receiver; if an echo is observed, proceed to the next step.
- Measure the drop level; if it is less than +5 dBmV, then connect an isolation amplifier between the drop and the television receiver. This is to prevent overloading of the amplifier and/or the television receiver.
- Look for a sync bar, echo or co-channel in the picture. If it is still present, it will be necessary to use a converter.
- If a VCR is also connected, the preceding test should be repeated with the VCR output connected to the television receiver and the VCR input terminated.

C. Other Connected Devices

(1)Discussion

Other types of equipment connected to the cable system can also cause DPU problems. Often equipment designers are not cognizant of potential DPU problems from inadequate shielding. FM receivers, burglar alarm equipment, modems, VCR switch boxes, computers and games are examples of equipment which is often connected directly to the cable that can cause problems.

Some of this equipment subjects CATV service personnel to two types of problems: DPU and the associated back feeding, and egress. In many instances, device shielding is so poor, emissions from the device exceed the 20 μV/m at 3 meters limit established by the FCC. While Part 76.617 of the Rules holds the customer responsible for emissions from most or all customer owned equipment, cable maintenance personnel are faced with the difficult task of finding and isolating the offending equipment.

Use of special band pass filters and/or isolation amplifiers can help reduce or eliminate back feeding to other outlets on the same dwelling and the cable distribution plant. With their inherent 10 dB gain, use of isolation amplifiers can make the signal leakage problem worse.

If this if found to be the case, consideration should be given to installing attenuator pads to reduce levels to the offending device, however care should be taken to keep levels well above the minimum needed for reliable operation of the equipment.

(2)Diagnosis

If the equipment to be connected is to be used with a television receiver or VCR (such as A-B switches, VCR switches or games) use the procedures described in chapter two.

If the equipment to be connected is used for other

services, such as FM radio or data receivers (like X*PRESS), the procedures should be as follows:

- Disconnect all inputs from the equipment to be measured and connect a SLM to the input connector. Keep the test lead as short as possible and do not use push-on connectors.
- Measure the amplitude of all local VHF off-air channels and measure the highest level.
- If the highest level exceeds -25 dBmV on any channel, direct connection to the cable system should not be made; an isolation amplifier should be connected between signal splitter or tap and the equipment to be connected. If the equipment is an FM receiver or will receive signals in the FM band, then an isolating bandpass filter can be used to reduce or eliminate back-feeding.
- If the recorded levels exceed -25 dBmV, then the potential for harmful back-feeding exists. If the recorded levels exceed the -25 dBmV limit by only a small amount, television receivers served by the same splitter or tap should be checked for a sync bar, echo or co-channel. If it is observed, then the equipment being measured should not be connected to the cable system.
- Alternatively, an isolation amplifier with 60 dB or more isolation could be tried if they are available.

D. General Discussion

As the use of cable-ready receivers, VCRs and other ancillary equipment increases, we can expect to experience a corresponding increase in related service requests. Effective training of all personnel in dealing with related problems can be beneficial to both the cable company and the customer. The cable company can enjoy reduced costs while the customer can get the most benefit from the cable service and the equipment to be purchased.

It is best for everyone if problems can be handled by the telephone whenever possible. Therefore, the importance of training office personnel cannot be over-estimated. Examples of questions which might be used by CSRs to diagnose and isolate problems are shown below:

- Did you buy a VCR and connect it?
- Did you move your television receiver to a different location in the room?
- Have you connected an FM receiver to the cable?
- Have you installed any splitters or cable from a source other than the CATV operator?
- Did you connect a different television receiver to the cable?
- Is the isolation amplifier plugged in?

The details of a CSR training program are beyond the scope of this policy; they will require the cooperative efforts of everyone involved to be effective.

Very Important: Every location not using a converter needs to be identified in the billing system. This will help prevent future service calls and will help CSRs identify problems resulting from direct connections.

In the future, consumer equipment will be designed and manufactured with cable in mind. Then CATV customers can use all their features without the resultant degradation in service quality being experienced now. Hopefully, this document will help during this transitional period.

Appendix A-Summary of Scope and Progress of other Industry Groups

RF Cable Interface and Decoder Interface Working Groups: Introduction

Standards committee progress is often painfully slow. To a newcomer, especially someone accustomed to the "fast lane," this activity can be quite frustrating. There are several points to be made about this. Firstly, if cable interface and decoder interface standards were easy to achieve, they would have been agreed to a long time ago. There has been pressure for an extended period of time. Secondly, the issues being settled are delicate points involving trade-offs which impact the economics and performance of two industries. These two industries have a history short on cooperation and long on confrontation. Fortunately, the trend toward cooperation is on the up swing.

At first blush, it would seem difficult to find two industries with more reason to cooperate than the Cable Television Industry and the Consumer Electronics Industry. Better pictures should enhance satisfaction in cable service and better choice should increase the desire for quality images. Most of the difficulties to date have been due to a lack of information and misunderstanding. Open, honest, and frank contacts should be helpful to all.

Structure

In 1982, the National Cable Television Association, NCTA, and the Electronic Industries Association, EIA, formed a Joint Engineering Committee to discuss technical issues which impact both industries. The first order of business of that committee was to create a channelization standard for frequency assignment. After considerable debate, the committee recommended the plan which became an EIA Interim Standard for one year. It has recently emerged from this probationary phase to become an official recommended standard.

It is important to note that these standards are voluntary standards. Neither the NCTA nor the EIA have enforcement powers. Adherence to the standard depends on the good faith of the companies involved.

After the channelization standard, two Working Groups were formed to consider an RF cable interface standard and a decoder interface standard. Shortly after formation of the Decoder Interface Working Group, it was discovered that the EIA R-4 Group had its own decoder interface group. Seeing little point in duplication of effort, the Joint Committee decoder working group disbanded.

Attitudes

An important reason for the successes of the Joint Committee has been a change of attitude on the part of the participants. In the past, cable/consumer electronics relations were marked with finger pointing and name calling.

Very important technical trade-offs were the focus of arguments which had significant economic impact. This behavior has been replaced with a realization of the importance of customer satisfaction. The customer/subscriber must be satisfied if the two industries are to prosper. It is pointless to try to shift blame. The customer/subscriber demands satisfaction from both industries.

A significant step in the right direction has been the relaxation of what has been called the "70 dB syndrome." In the past, the cable industry has tended to demand that any potentially harmful phenomenon be suppressed by 70 dB. The consumer electronics industry has become offended by this approach since this degree of suppression is difficult to measure for most parameters and impossible to achieve in practice. The result has been near zero progress.

The "70 dB syndrome" has been replaced with a much more reasoned discussion of actual problems. A phased approach has been recommended which sets achievable targets, timed to cover frequencies ranges as they are implemented in the cable practice over time. When a cable representative believes there is a need for a specification which the manufacturers feel can't be presently achieved, a tutorial is included. This motivates the manufacturers to strive for solution in future designs.

The defensive guards have been lowered and technical people are listening to one another in open dialog. People are trying to understand each others problems and accommodate.

Occasionally, a new member joins the committee and makes moves in the old ways. The committee brings the newcomer in line and progress resumes.

The RF Cable Interface, IS-23, Working Group

The RF Cable Interface Working Group's major concern is the Cable Compatible Consumer Product, such as the Cable-Ready TV. The committee very quickly got over the issues of connector type, impedance, and signal levels. A more serious problem has been Direct Pick Up (DPU) of broadcast signals.

The committee has taken voluntarily committed receivers and measured them in a T.E.M. (Transverse Electro-Magnetic) cell. The tests were funded by the EIA, and each participating manufacturer received data on his products. A non branded table of data was supplied for committee use. Sets ranged in performance from satisfactory behavior to sets with considerably lower levels of tolerance. Manufacturers have been carefully considering the art of radiation immunity as it applies to their products. Progress has been made.

The most significant aspect of this work is a ten-times increase in the direct pick up specification. Under this proposal, a complying product must not show noticeable degradation of performance in the presence of broadcast electromagnetic fields having a strength of one volt per meter. The previous specification came from the Canadian standard and was based on one-tenth of a volt per meter. It is expected that the proposal will cover 80 percent to 90 percent of all cable DPU problems. The remainder will require a converter to completely solve the problem.

It is important to realize that the TV receiver manufacturers have taken on a significantly greater burden with this new standard. This level of performance will be difficult to achieve. However, the customer/subscriber will benefit. This achievement demonstrates that two industries can work together to resolve difficult issues when a cooperative approach is employed.

Cable converter product has also been measured in T.E.M. cells. These tests were funded by cable volunteers and the NCTA. The goal was to understand techniques for implementing the converter's seemingly better performance.

A recurring problem in this committee work is the separation of performance standards from interference standards. It is felt that the regulation of performance is best left to the marketplace. However, the control of interference is a bona fide standards matter. Four kinds of interference have been considered in order of increasing severity:

1. Interference with the product's own performance
2. Interference with other products in the same home
3. Interference with other subscriber's reception
4. Interference with other users of the electromagnetic spectrum, such as aircraft navigation and communications radio.

The Long Term Future

The logical conclusion for the trends in CATV home terminals is for subscriber ownership. This is the best outcome for nearly all concerned. The subscriber has his favorite hardware relationship: ownership. Unlike his European cousin, the US TV receiver user has historically preferred ownership to rental. The same should apply to the decoder hardware. This will especially be the case if he can own the tuner, remote control, and other convenience features as part of the bargain. These later goals are achieved by having the descrambler come after the TV receiver's tuner. There are two ways of accomplishing this. One way has a "decoder interface plug" on the back of the TV receiver (or VCR, etc.) into which the subscriber owned (or leased) descrambler fits. The second method is to build the decoder directly into the receiver by the receiver manufacturer. The latter will happen if there is a de facto or actual decoder standard which would permit free movement from cable system to cable system. If this is not achieved for whatever reason, then plug-in, re-sell, or swap devices will be required.

The principal entity which is disturbed by this approach is the manufacturer of home terminals who doesn't also make TV receivers. He sees more than half of his "value added" eliminated. But from the bigger picture, the waste and inefficiency of having a tuner, remote control circuits, and related components in the home terminal, only to have them duplicated in the TV receiver, is undesirable.

From the cable operator's point of view, the program protection method must ensure that subscribers cannot defeat the system and receive the programming for free. Another interested party in all this is the programming producers. If they believe their product can be stolen, they will not make it available to the cable operator. The cable

operator realizes that the would-be pirate has nearly unlimited time and resources at his disposal. The system which meets this test will be robust indeed. Once this assurance is obtained, the cable operator will gladly give up the capital requirements caused by the need to supply the descramblers. The money would be better invested in more programming, service-enhancing facilities, or home terminals that provide new services to subscribers.

The Decoder Interface, IS-15, Working Group

The Decoder Interface Working Group is not a Joint Committee effort, rather it is entirely an EIA activity. In spite of this, there has been significant friendly dialog between the two industries. Cable participation in this committee work has been welcomed. Specifically, there have been cable industry contributions to the design and testing of the interface plug.

The Interface Plug is also called the Cenelec 20 pin plug. Even with twenty pins, the committee wished it had more! Composite video in and out is provided. RGB inputs are optional. A data line pair to communicate logical instructions such as EIA Home Bus signals, has been provided. At some day in the future, it will be possible to connect consumer electronics products to a master home system. Fast-blank for text insertion and decoder restored sync input pins are provided. Devices with the interface plug are intended to be optionally "daisy chained." That is, devices may be designed in such a manner as to be connected in series, allowing interaction between devices and an extension of product into an easy to use, consumer friendly system.

The most serious and controversial issue regarding the interface plug is automatic gain control (AGC) design philosophy. AGC has two modes of operation with strongly conflicting demands, acquisition and stable operation. The circuit time constants must be different for these two modes. Additionally, the AGC time constants of the cable converter and television receiver must be significantly different so one is dominated by the other. If the two time constants are close together in value, oscillations may result. The problem is that some receiver manufacturers are using long time constants while others have decided upon short time constants. An important difficulty to appreciate is the fact that in scrambled mode, most systems suppress horizontal sync pulses. For decades, television AGC design philosophy has depended on finding and accurately measuring sync pulse parameters. The two processes are in fundamental conflict. Without sync pulses, there is a tendency for the amplifiers to increase gain and saturate. This crushes the signal and ensures that sync pulses will never be found. This "lock-out" condition is a disaster which must be avoided. It is most complicated in systems which suppress sync pulses in the vertical interval as well. This phenomenon is extremely non-linear and not well understood. Some engineers insist that there is no theoretical basis for these systems to ever work! They claim that each time the system achieves synchronization and decoding, a fortunate electrical accident has occurred!

One serious complication is the fact that AGC expertise in television receivers is a scarce resource. There are probably less than twenty experts in the entire world. The subject is very complex with almost no published technical literature. An engineer becomes an expert in this field through years of apprenticeship to an existing expert. A second complication is that competitive performance between manufacturers' products is largely determined by AGC characteristics. To someone who appreciates this, the committee interactions take on a whole new dimension. There is the careful guarding of secrets, the pained release of just enough information to make the interface plug system work, but the anxiety that too much may have been revealed to a competitor.

The Decoder Interface Working Group has had three field tests in ATC's cable systems in Denver, CO. Several TV receiver manufacturers and several decoder manufacturers participated with varying, but basically very good, results. The level of success exceeded expectations and re-energized the committee. At least one receiver manufacturer's engineers formed a strong alliance with a decoder manufacturer's engineers. Extensive cooperation and mutual sharing of information has resulted in a raising of the potential for success of these two companies. At least one other manufacturer took a very unfriendly, parochial approach in the first test which offended the other participants. This has caused embarrassment to others at that company who have worked long and hard at trying to establish a record of cooperation and leadership. By the second test, this was corrected.

The best indication of the success of the field tests has been the lively interchange that took place afterwards, resulting in significant improvements in the proposed standard. The most interesting improvement is the proposal of an AGC time constant control pin which would yield control of the time constant to the decoder.

Current tests have concentrated on base band scrambling schemes because the interface plug connections do not include RF signals.

Committee agreement on the interim standard was achieved by mid-April 1986. The parent group approval process is essentially complete.

Upon completion of the Base Band Decoder Interface, the committee will turn its attention to two more issues: a) practical details of implementation of the standard and, b) potential of the standard to include an IF (Intermediate Frequency) connection.

Practical issues include the facilitation of testing of designs. To that end, the New Technologies department of ATC volunteered to host tests. Decoder manufacturers will supply encoders and decoders and Television receiver manufacturers will provide TV sets. Engineers will be welcome to use the laboratory to make measurements and conduct experiments. Confidentiality will be preserved by proper attention to ethical practices. Another practical issue is the promotion and promulgation of the standard. For that purpose the EIA and selected manufacturers had a hospitality suite at the International Conference on Consumer Electronics (ICCE) in Chicago June 4 through 6, 1986. ATC helped in equipping that suite. The ICCE is the principal technical conference for consumer electronics

design engineers. Similar hospitality suites are contemplated for upcoming cable shows. Strategies for generating cable support of the Interface Standard are under consideration.

Both the EIA and the NCTA recognize that most of the scrambling systems displayed are not base band. The next order of business is to strategize a way of accommodating RF scrambling at IF. This may be done on a separate plug, or the signals may be descrambled at base band. Whether the return will also be at IF or through the base band plug at base band, will be determined by the committee. This work is expected to take no more than an additional six months, perhaps less because the issues are less complicated than the previous problems.

First availability to TV receivers incorporating the interface plug will likely be in late 1986.

The Committee Process

The committee has a life cycle of its own. At first there is a small group of attendees trying to make it happen. Slowly the group expands until so many attend that it is difficult to get anything done. After several months, those low on patience cease to attend. Decision-making picks up. Then some dramatic event such as a field trial takes place. Once again, attendance soars. A new danger to progress takes place. New members attend for the first time. They start questioning the fundamental philosophy. Old ground is revisited. The skillful chairman must maintain progress, yet not turn off the new attendees. The new attendees will have their say in the final standards approval process. They must not be alienated. As the committee reaches the end of its work, two forces come to conflict. Those who have put in years of work want to bring it to a close. Others who have been alerted to the committee's work by the expected issue of a new standard become alarmed. They see all kinds of threats to their interests and, of course, better ways to do the job, usually using advanced technology which wasn't available when the committee started its work. The committee chairman must manage these forces or total grid lock will result.

Another practical difficulty with committee work is the fact that the most likely contributors are industry experts and industry decision-makers. By definition, these individuals are very busy and in demand by their company's engineering departments and by other committees. Getting the right people involved is critical to success. Occasionally, a company's management's view of committee work is too parochial. Important contributors are denied permission to attend, or are not supported in this activity.

An important element of the committee process, is the mutual education of the two participating industries. Committee work is an excellent means of communication between experts in the cable and the consumer electronics industries. Well before an agreement on standards is reached, the TV receiver design experts are applying what they have learned from the committee work and are anticipating the new standard. This process makes timely introduction of product, based on the new standard, possible.

While it will be years before a significant penetration of product built around these standards takes place, those customers with an urgent need or desire will be able to purchase products in the second half of 1986. Thus, a timely impact will be made even though extensive use of the standard will take many years.

Thanks go to the EIA and the NCTA for their leadership in these issues. Special thanks to the EIA for sponsoring the meetings and to Tom Mock, of the EIA, in particular. The task would have been much more difficult, if not impossible, without his time and energy. And, of course, thanks to the committee participants for their participation and time away from home.

Conclusion

Progress is being made on two fronts, the RF cable interface and the decoder interface. Progress is slow and painful but essential if the customer/subscriber is to be provided with the maximum utility potential of the technology. These are long term solutions. But they will never arrive without heavy investment of energy and time in current committee work.

Consumer Electronics Bus Committee:

Introduction

The Consumer Electronics Bus Committee (CEBC) was formed by the Electronic Industries Association's Engineering Policy Council to recommend voluntary standards for what has been popularly called the Home Bus.

The Committee chose not use that name, but used the Consumer Electronics Bus (CEB) instead, because past use of the name Home Bus has inferred a purely digital environment. The standards under development now are for multiple media, some of which will use mixtures of analog and digital techniques.

The media for which standards are under development are:

1. The Power Line Bus (PLBUS).
2. The Wired Bus (WIBUS).
3. Infrared media for use in a single room (SRBUS).
4. Low Power RF (RFBUS).

At the heart of the CEBC standards development effort are a number of basic requirements:

1. From the consumer's point of view, extreme "ease of use" is required.
2. Future expansion for unknown uses built in.
3. Commonality of language across the media.

The methodology of the CEBC is to focus on systems and techniques proposed by member companies. Where there are no proposals forthcoming, consultants are used to gain a particular goal agreed upon by the Subcommittee responsible for it.

The Single Room Bus

The original single focus of this Subcommittee was the problem of proliferation of remote control systems: all using infrared media, not standardized, (and in some cases) not compatible. It was felt that further development of the Remote Control marketplace would be inhibited by further increase in the number of hand-held controllers as more products became remotely accessible. This original target we called the "Unified Remote Control System."

Upon consideration of the capability of the IR media, we realized that the SRBUS Standard must include the capability of remotely addressing the WIBUS and PLBUS, as well as for use as a Single Room LAN for unattended wireless communication between pieces of equipment within the room.

We were forced into these expansions because it was clear that the probability was very high that infrared would be used for these applications: the CEB standard would quickly become obsolete if we did not roll those obvious applications into it.

We also came to the conclusion that the new SRBUS Standard *must* be defined in a way that precluded interference by existing products. After all, it would be very difficult for the Chief Engineer of a manufacturing concern to make a decision to go to the new CEB Standard if it had demonstrable performance problems at the outset. At the same time, we have a strong bias toward establishing the standard in such a way that we minimize interference by the CEB to existing equipment.

The concept of a number of separate systems, using the IR media, operating more or less simultaneously in the room led to the definition of "Consumer Service Levels." These are descriptions of performance levels as seen by the consumer, not OSI levels.

Level 1:

Single, shared, one-way control channel services. User feedback or verification of control operation is only present in the form of the visible and/or audible response of equipment responding to user commands. Access to other CEB bus types may only be realized through active two-way "gateways" and not "bridges."

Level 2:

Single, shared two-way control channel services. User demand or quasi continous driven control signaling is provided with channel provisions to allow multiple Level 2 devices to be operated within the same room. Two-way operation is assumed to be primarily used to validate communications and resolve channel contention and collisions. Level 2 will enable use of the SRBUS as a bridge with other CEB media and the use of repeater-like functions.

Level 3:

Dedicated, independent multiple audio channels. Compact-Disk-equivalent performance is supported from multiple sources or channels to multiple receiving devices tuned or enabled to receive a selected stereo audio pair. As a secondary application consideration the channels may be configurable as either one or two-way data channels to permit use as a limited speed LAN between devices operating at speeds beyond the capabilities of PLBUS. Note that the maximum speed of the bus is limited to that required to support its primary multiple channel audio application.

Level 4:

High speed data communications. In recognition of the potential of future optical data bandwidths an open ended provision is intended for unspecified data applications. The only available example at present is hard disk data.

Level 5:

Wideband signal communications. An optical wideband wireless link is intended to extend the reach of future SRBUS concepts to include video and/or WIBUS communications.

Note that Level 1 defines a simple, one-way Unified Remote Control System. LEVELS 2-5 define a two-way approach.

At this point, the Subcommittee faced a choice: we could focus on quickly defining the Unified Remote Control standard so that industry could start using it. But the risk of developing the Level 1 language and protocol and then later finding it to be incompatible with other levels was too high. Therefore, the Committee decided to use a top-down approach, and take the time to develop a unified command and addressing language for the whole home. The language then used by any one particular level of the SRBUS would be a hierarchical subset of the CEB language.

Development Strategy

The command and addressing language is being developed by a working group existing within the Technical Steering Committee (the top level Committee of the CEBC). Therefore, the strategy presently being pursued by the SRBUS Subcommittee is that of implementation in a way that guarantees coexistence with existing systems.

We are presently focusing on Levels 1 and 2, and pursuing two implementation strategies. In order of preference, they are:

1. Staying at 900 nm (the wavelength used by almost all production systems now) and guaranteeing non-interference by receiver design and coding techniques.
2. Move away from 900 nm to the 850-800 nm range and separate the systems by optical filtering.

The reasoning for the order of preference is one of simplicity: staying at 900 nm means minimal change for those businesses already in production, and the coding techniques can be achieved through enhancing the capability of the microprocessor systems already used in most manufacturer's designs.

To stay at 900 nm and to be able to perform reliably in the presence of transmissions from older systems, the CEB/SRBUS system must very carefully define optical receiver techniques to ensure that good quality signals are presented to the decoding sections of the receiver. It is expected that wide dynamic signal latitude will be required. It is not expected to be an overly difficult task.

Present Status

At the present time, no company has come forth with a proposed system for achieving Level 1 and Level 2 system implementation. Upon retrospect, this seems reasonable since no company has been contemplating such global standards for the home simultaneously with the remote control system.

Therefore, the Subcommittee has decided to use the services of a consultant. The task of the consultant would be to evaluate the approaches recommended by the Subcommittee and make their own recommendations as to how best to implement a realizable system whose performance is consistent with the goals of the Subcommittee.

The consultant will then construct breadboards to demonstrate feasibility of the standard and for demonstration to the Member companies of the Subcommittee.

Schedule and our Plans

At the time of the writing of this paper, a number of consultant candidates are being evaluated. By the time of presentation, the chosen consultant will be at work on the task described above. We then expect that breadboards will be available toward the end of 1986 for evaluation by member companies and subsequent alterations should some objections be encountered.

Human Interface

Using the CEB Unified Remote Control System to control a number of pieces of equipment probably presents no problems for firms already in the business. A number of products are already in the marketplace using remote control systems that can address many different pieces of consumer entertainment equipment.

The real challenge will be to those firms who decide to design and sell wireless remote access to the PLBUS and WIBUS. In doing so, they will be able to create a wireless hand-held remote control system which can address the entire home. The challenges in the area of good human factors design will be large, even if the addressing space is limited to a small number of devices. Making consumers comfortable with actuating and controlling lights, VCRs, etc. which are out of sight will take well-thought-out, carefully executed algorithms and devices.

Indeed, the area seems to be large enough to appear to support entire companies: a number of small firms are moving into the Home Control area, specializing in human interfacing.

Proliferating more and more different, and conflicting, hand-held systems is a human interface problem of a different (but just as severe) type. Almost all of the Consumer Electronics Industry has participated in developing new markets in which the consumer became confused and irritated: we've watched the new businesses stumble, and sometimes stall.

The CEB SRBUS standards provide a method of avoiding the proliferation problem. They can substantially reduce the complexity, on the consumers part, of operating a wide variety of remote control equipment made by various manufacturers. Strong acceptance and conformance to the coming CEB Standard can make the marketplace growth rate much quicker and its path much less thorny.

Chapter One-Integrated Switching Systems

Discussion

The confusion and mess of A-B switch configurations has led to the design of numerous integrated RF switching networks. Typically such devices contain several splitters and multiposition switches and may contain integral amplifiers to overcome splitting losses. While they have the disadvantage of some lack of flexibility, their use reduces much of the necessary cabling and results in clearly labeled functions for the customer.

Unfortunately, many of the devices on the market (particularly those available through retail electronics and hi-fi stores) are inadequate with regard to functionality, switching isolation, through loss and/or shielding. In their defense, many were designed more for the interconnection of other video equipment (video disk players, video games, multiple VCRs, etc) than for cable installations. Only recently have devices been introduced which were designed with the requirements of cable operators in mind.

This section contains a discussion of the various options available to the designer of such equipment and closes with a model specification for one possible configuration. The NCTA is not in the business of equipment procurement and thus the specification is not intended to be complete, nor to focus on features other than those necessary for minimum operation. Such factors as mechanical configuration, additional input or output ports, AC power switching, etc. are more properly considerations of market assessment. The subcommittee is indebted to George Hart of Cablesystems Engineering for many of the provisions in the model specification.

Configuration Options:

Most useful switching devices will contain certain features in common-namely the ability to select several sources for viewing or taping and to view pre-recorded tapes without cable changes. Beyond that, however, there are choices to be made in amplification, feeds to descramblers, FM outlets and non-RF features.

Splitters vs. VCR Feedthrough. A device which only provides switched outputs for VCR and television set may be built without any splitter loss if desired, although some control logic is required. This is done by feeding each input to an armature port on both the VCR select switch and the television select switch. Provided the physical distance between the switches is kept very short and the switch arms present an open circuit when non-selected, this can be done without the use of splitters.

The logic is set up so that independent selection may be made of RF source for the television and VCR unless both select the same source. In that case, the television is connected to the output of the VCR instead of its selected source. Provided that the VCR is internally switched to its bypass mode, the television will receive the same source as the VCR. By preventing both selector switches from activating the same input port, double termination of sources is avoided. The Zenith "Video Organizer" is an example of a commercial product using this technique.

This configuration involves two compromises: first, the savings in signal loss is more theoretical than real and second, it may be more confusing to the subscriber. The problem with the signal loss savings is that many VCR's are quite lossy in their signal bypass path, which contains a splitter and switch of its own as shown in the diagram below. Although the EIA/NCTA interface specification calls for a 5 dB maximum loss recommendation for future designs, a few models of currently installed VCRs may have losses in excess of 10 dB.

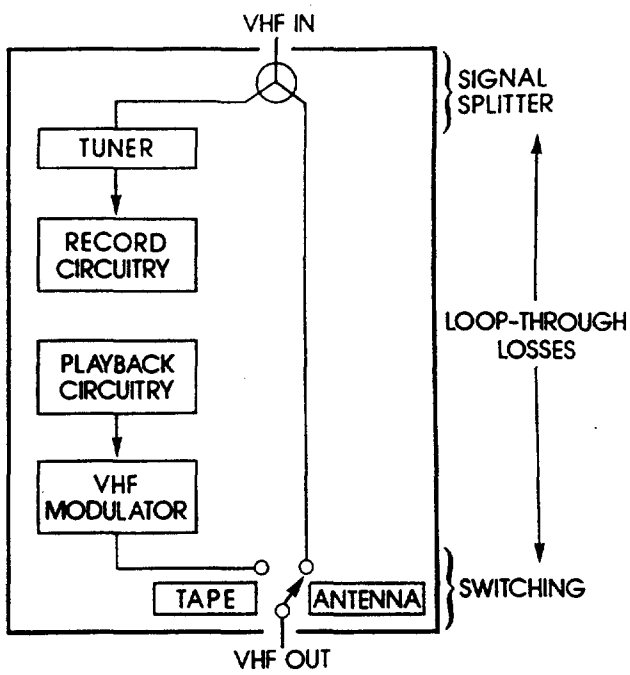

VCR Signal Flow Diagram

The potential customer confusion stems from the need to switch the recorder between tape mode for playback and (sometimes) to bypass mode for viewing non-recorded material *in addition to* selecting sources of the RF switching box.

Descrambler Output Port(s). One requirement which is unique to cable installations using scrambling is the necessity of a signal feed to the descrambler. With some addressable descramblers, in fact, a full-time cable feed is necessary not only for receipt of new authorizations, but to keep the unit from totally deauthorizing. Descramblers built for use in dual-cable systems generally also contain internal A-B switches and thus need inputs from both cables. The inclusion of such output ports is one of the factors that distinquishes switching units intended for the cable market from simple video source selectors.

FM Receiver Port. A second port that is sometimes provided is a full-time feed intended for use by an FM

receiver. If such a port is considered, the egress and ingress implications outlined in Section I, chapter three should be carefully considered. As a minimum, it is recommended that the FM port be fed through a bandpass filter. If addressable devices or other terminal equipment that use signals in the area above 108 MHz are in use, then the filter should be designed to have minimum through-loss in that region. Similarly, the principal aircraft frequencies are located immediately above the FM band as are many leakage detector signals, so the sharpness of the upper cutoff is of interest. A low-gain, high-isolation amplifier in series with that port can reduce the effects of strong local TV signal ingress.

AC Powering Considerations. Configurations which use active signal switches or amplification will require line power of some kind. While this may seem a mundane consideration by itself, it may not be so when combined with the requirements of other equipment. A customer with a converter, VCR and television set may have already used all available outlets within reach. As a cost-savings measure, some manufacturers of switching networks may choose to use wall-mounted transformers ("calculator power supplies") as those may be independently UL approved, saving both time and money in bringing the new product to market. Unfortunately, many such transformers not only use one outlet, but may cover additional outlets as well. Also, there is no possibility with such a unit of providing an accessory AC outlet on the back so that the total number of receptacles in use is the same. Finally, consideration should be given to the reliability and durability of the light duty low-voltage cords and plugs used to connect the transformer to the switching unit.

Amplification. Given that most switching networks involve signal splitting to feed multiple receivers and that low signal levels limit attainable noise performance as explained above, the obvious answer is to provide amplification in the switching network. If such amplification is provided, careful consideration must be paid to its placement within the network and electrical characteristics.

Wherever the gain stage is placed, it becomes part of the cable system's distribution network. Unlike trunk amplifiers, however, it operates without well-determined input and output levels, owing to the variation in drop levels within a system. Thus, it must provide:

- Acceptable distortion characteristics when the network is supplied with the highest expected drop signal level.
- Acceptable noise performance when the network is supplied with the lowest expected drop signal level.
- Sufficiently flat frequency response that the range of signal levels does not exceed either the NCTA or EIA limits when connected to a typical drop.

Fundamental to the design is the question of whether the gain is to be placed at the input ports or output ports. If the gain is placed after the splitting and switching, then the distortion characteristics are easier to meet as the levels are lower, however, the passive losses add directly to the noise figure and, unless the inherent noise figure of the amplifier is significantly lower than the customer's video equipment, nothing is gained.

Placing the amplifier ahead of the splitters requires it to handle somewhat higher signal levels, but allows optimizing noise performance. It is important that such amplifiers have a gain not significantly higher than the passive network losses. This keeps the output level within reasonable range for distortion reasons and keeps the amplified signals from leaking into the non-amplified signals due to the finite isolation of the switching. Preamplification also requires that the switching devices handle somewhat higher signal levels which may be important to some active switching technologies.

The addition of an active amplifier stage also is of concern to system lightning/surge protection via the cable input port. Low noise figure high-performance amplifiers are inherently sensitive to lightning surges and require special consideration in the design of an amplified switcher product. Such may not be the case with direct cable inputs to converters depending on whether the converters use an input amplifier.

Model Specification-Converter/VCR Switching Network:

Description:

An RF routing and switching device capable of routing signals from four sources to two switched and two fixed output ports. Two of the input ports are "wideband ports" and two are "low-band ports." The two fixed output ports are permanently fed from the wideband input ports.

Functional schematic:

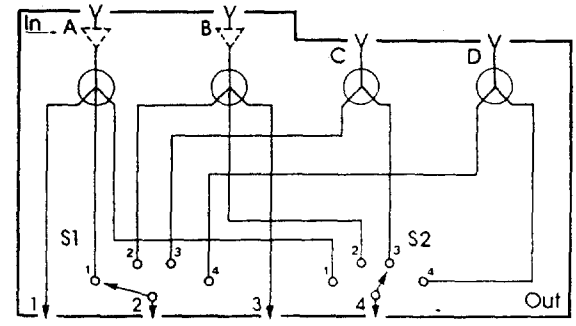

Applications:

B. Single cable with decoder, VCR, and antenna or external source

1) Connection diagram

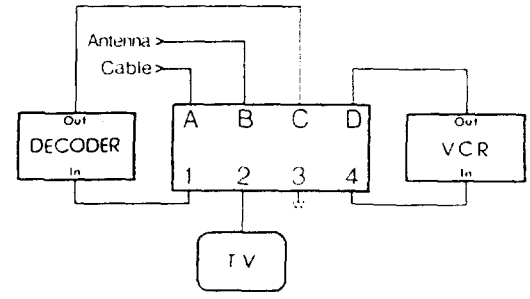

2) Labels

A	Cable Input	**Switch 1**	View
B	Antenna (or ext)	Pos 1	Cable
C	From Decoder output	Pos 2	Antenna
D	From VCR Output	Pos 3	Premium
1	Cable to Decoder	Pos 4	Tape
2	To TV Set	**Switch 2**	**Record**
3	(not used)	Pos 1	Cable
4	To VCR Input	Pos 2	Antenna
		Pos 3	Premium
		Pos 4	(not used)

Applications:

(3) Features
- Allows use of antenna, playback VCR, video disk, MDS or STV decoder, computer, etc.
- Allows "cable-ready" tuners to access all non-scrambled program material with independent TV and VCR channel selection.
- Allows VCR to use timed recording functions on all non-scrambled channels or single premium channel.

(4) Limitations
- Doesn't allow simultaneous access to more than one scrambled channel.
- Doesn't allow unattended recording of both scrambled and clear channels.
- If external input is antenna, requires high isolation switching due to ingress/egress requirements and variation in signal level. Also high input levels from antenna may cause distortions.

D. Single cable with decoder and dual VCRs

1) Connection diagram

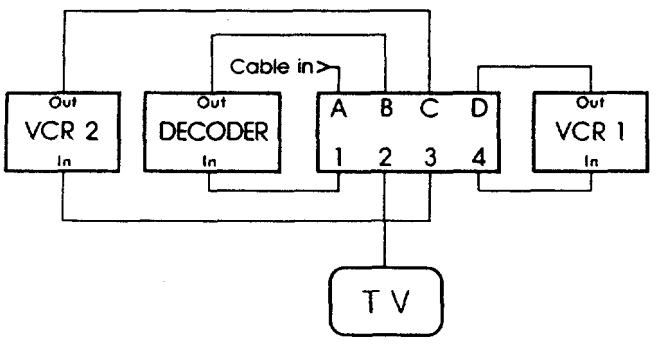

2) Labels

A	Cable Input	**Switch 1**	**View**
B	From Decoder Output	Pos 1	Cable
C	From VCR #2 Output	Pos 2	Premium
D	From VCR #1 Output	Pos 3	Tape 2
1	Cable to Decoder	Pos 4	Tape 1
2	To TV Set	**Switch 2**	**Tape #1 Record**
3	To VCR #2 Input	Pos 1	Cable
4	To VCR #1 Input	Pos 2	Premium
		Pos 3	Tape #2
		Pos 4	(not used)

(3) Features
- Allows integration of two VCR's with controls for tape duplication.
- Tape 2 may be used to record a clear or scrambled channel from decoder while Tape 1 is recording the same channel or any other unscrambled cable channel.
- As an alternative, Tape 2 may be used as playback only and output #3 used as feed to 2nd TV set.

(4) Limitations
- Cannot copy from Tape 1 to Tape 2.
- Same limitations as other configurations with respect to use of remote controls or timers for manipulation of switcher controls or descrambler tuning.
- Tape 2 input limited to Converter/Descrambler output.

A. Dual cable with decoder and VCR

1) Connection diagram

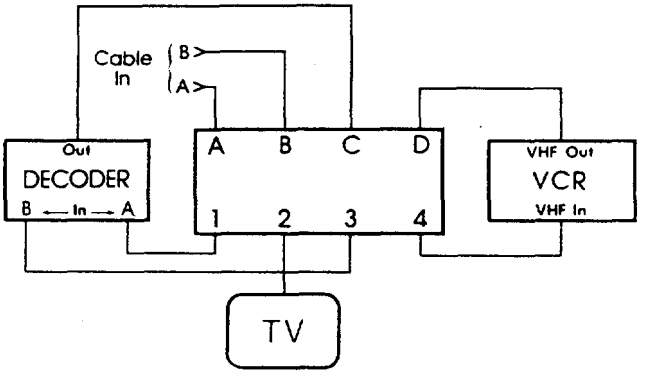

2) Labels

A	Cable A	**Switch 1**	**View**
B	Cable B	Pos 1	Cable A
C	From Decoder Output	Pos 2	Cable B
D	From VCR Output	Pos 3	Premium
1	Cable A To Decoder	Pos 4	Tape
2	To TV Set	**Switch 2**	**Record**
3	Cable B To Decoder	Pos 1	Cable A
4	To VCR Input	Pos 2	Cable B
		Pos 3	Premium
		Pos 4	(not used)

(3) Features

• Independent access by TV and VCR to A Cable, B Cable and Decoder output. Allows use of built-in tuners for independent selection of non-scrambled channels. • Restores utility of remote control and timed tuning functions of TV and VCR for channel selections within a single cable. • Allows recording or viewing of scrambled or clear material or tape playback without changing any cables.

(4) Limitations

• Cannot record one scrambled channel while viewing another.
• Cannot do timed recording sequences that require cable selection or decoder channel selection.
• Cannot use wireless remote controls for cable selection.

C. Dual cable with decoder, two television sets and external input

1) Connection diagram

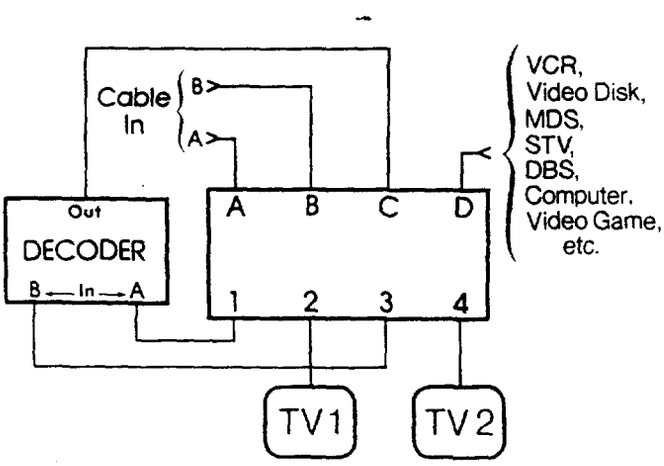

2) Labels

A	Cable A Input	**Switch 1**	**TV #1**
B	Cable B Input	Pos 1	Cable A
C	From Decoder Output	Pos 2	Cable B
D	From Auxiliary	Pos 3	Premium
1	Cable A To Decoder	Pos 4	Auxiliary
2	To TV Set #1	**Switch 2**	**TV #2**
3	Cable B To Decoder	Pos 1	Cable A
4	To TV Set #2	Pos 2	Cable B
		Pos 3	Premium
		Pos 4	Auxiliary

(3) Features

• Allows either of two TV sets to access both non-scrambled and scrambled programming with a single descrambler, although still limited to one scrambled selection at a time.
• Allows integration of other video sources into home video connection.

(4) Limitations

• Access to only a single scrambled channel at a time.
• Cable and function selection for remote TV set not convenient because of location of selector box.

E. Dual cable, dual decoders and VCR

1) Connection diagram

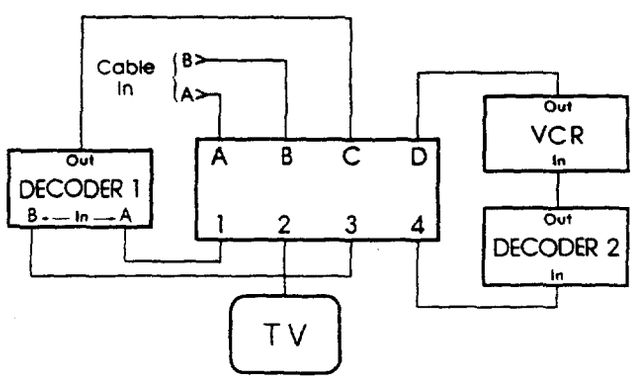

2) Labels

A	Cable A Input	**Switch 1**	**View**
B	Cable B Input	Pos 1	Cable A
C	TV Decoder Output	Pos 2	Cable B
D	From VCR Output	Pos 3	Premium
1	Cable A To TV Decoder	Pos 4	Tape
2	To TV Set	**Switch 2**	**Record**
3	Cable B To TV Decoder	Pos 1	Cable A
4	To VCR Input	Pos 2	Cable B
		Pos 3	(not used)
		Pos 4	(not used)

(3) Features
- Allows for simultaneous access to two scrambled channels.

(4) Limitations
- Requires cost of two descramblers to be amortized.
- Wireless remote controls may not be usable on both descramblers because of interaction.
- Timed recording functions of VCR involving more than one channel will not work as VCR's tuner is fixed on decoder output channel.
- On addressable systems, decoder #2 will not receive authorization data if Record switch is left in position 3 or 4.

Note: Addition of a second decoder to any of the above application diagrams ahead of the VCR will work in much the same way.

Electrical specifications:

(unused ports terminated in 75 ohms)

Bandwidth

A and B Inputs:
54-450 MHz
(Note: two-way systems will require that the lower limit be 5 MHz (in the reverse direction) while the upper limit can be expected to increase with the development in cable technology to 550 MHz or higher).

C and D Inputs:
54-74 MHz

Switching isolation

(on-off insertion loss ratio)
54-74 MHz:
75 dB
(Note: if applications are contemplated in which one port will be used for roof-top antenna inputs, this should be increased to 80 dB minimum, through 216 MHz. If the cable system upper frequency limit extends above 470 MHz, the same consideration will apply to potential UHF station interference.)

74-450 MHz
65 dB
(Note: this specification assumes that dual cable systems have opposing channels RF phaselocked).

Input terminal isolation

A and B ports to each other:
70 dB, 54-450 MHz
(Note: if applications are contemplated in which one port will be used for roof-top antenna inputs, this should be increased to 80 dB minimum up to 216 MHz. The same considerations discussed under switching isolation above apply here for systems whose upper frequency range overlaps the UHF broadcast frequencies.)

All combinations of input
Ports from each other:
75 dB, 54-74 MHz
(Note: this specification is included so that impedance mismatches of various sources do not degrade the effective switching isolation.

Amplification

Although the functional schematic above shows three-way splitters on the wideband input ports, an analysis of the suggested applications shows that, except for (C), only two of the three outputs are actually used at any one time. Thus, with sufficient switching flexibility and some control logic, it would be possible to achieve the same result using only two-way splitters. In that case, the losses could be kept to 4 dB or so and the complications of active amplifiers avoided. If amplifiers are used, they should be placed as shown in the functional diagram at the beginning of this section. Unless provisions are made for return paths, of course, such amplifiers would preclude use in a two-way system.

Gain and distortion

Net Gain:
The net gain, considering amplification, splitting and switching shall be in the range of -4 to +3 dB (0 nominal) from 54-450 MHz from A or B inputs to any selected output and -4 dB maximum from the C and D inputs to any selected output over the frequency range 54-74 MHz. The frequency response shall be flat within 4 dB in each case.

Crossmodulation Ratio:
›58 dB for 60 carriers synchronously modulated with a 15 KHz square wave at +14 dBmV input level at A or B input ports.

Carrier to Second or Third Order Beat Ratio:
›58 dB for 60 CW carriers at +14 dBmV input level at A or B input ports.

Carrier to Composite Triple Beat Ratio:
›60 dB for 60 CW carriers (standard frequency assignments) at +14 dBmV input level at A or B input ports.
Note: As with the upper frequency limit discussed above, the number of simultaneous carriers that must be handled while producing an acceptable level of distortion products can be expected to increase as the technology of cable distribution changes.

Carrier to Hum Ratio:
›50 dB for an input level of -6 dBmV over an AC range of 97 to 132 volts (if applicable).

Shielding

Egress:
Shall meet FCC Part 76.605 (a)(12) leakage limits with the outputs terminated for input signals of -15 dBmV applied

to A or B inputs.

Ingress:

When operated in an external ambient RF field of strength 1.0 V/m at any frequency from 54-450 MHz, the signal level measured at the A or B input ports shall be less than -35 dBmV when all other ports are terminated. The level measured at any other port shall be less than -55 dBmV when all other ports are terminated.

Note: This number is higher than that specified in the EIA/NCTA interface document (paragraph 2.1.1) dealing with signal transmitted back to the cable system, but is consistent with paragraph 2.1.2 dealing with performance degradation.

Chapter Two—Accessories to Aid Compatibility

Discussion

In general, use of the various switching networks discussed in earlier chapters results in improved capabilities for the customer, but at an increase in cost and operating confusion. Also, any of the schemes presented have the built-in problem that the cable converter is not controllable by the VCR's timer. Finally, there is the problem of too many separate remote control handunits: television, VCR, converter(s), FM tuner and video or audio disk players. Presented below are some approaches to solving these residual problems.

Timers

The problem of time-sequence recording on different channels has been approached in several ways. Oak and Zenith, for instance, have made available optional hand-held remote units with built-in timers for their converters while another vendor has introduced a "generic" controller/timer unit. These units perform the same functions as the normal remote but can be programmed to do several channel changes over a period of time. Thus, a VCR which is connected to a converter output could be programmed to record several events (all on the converter output channel), then the converter's remote timer programmed to select the proper input channels for the recording.

The advantages of putting the timer functions in a separate remote unit are that it allows the operator to offer timing as an option without the costs of handling two types of descramblers and that it offers backwards compatibility with existing converters. The downside is that the remote must be left pointed at the IR receiver in the converter and any missed command could ruin the entire recording sequence (particularly a toggled command, such as ON/OFF).

Other manufacturers, for instance Jerrold, Pioneer and Tocom, are choosing to eliminate the uncertainty of the command path from the remote by offering the timer as an internal converter option.

From the standpoint of the customer, the question is whether the additional capability is worth the cost and operating confusion. Each time a recording is made two separate timers, with different controls and logic, must be set up.

Multi-Function Remote Controls

A remote control option that is designed to reduce duplication and messiness is the multi-function remote control. An early example on the market is a unit by General Electric that is capable of duplicating the functions of up to four wireless remote units by any manufacturer. It is programmed using a built-in IR receiver which receives and stores control sequences from the units it will replace in service. Assuming that the controls are clearly labeled for the various functions and that the control codes for the various video appliances do not interfere with each other, it could save clutter in the home. An alternate design would include plug-in "personality" modules for each of the units to be controlled. Both approaches could represent either a potential loss of remote control revenue for the cable operator or a new market potential depending on whether the cable operator is the only source for such devices in his area.

One operator has suggested a much lower cost way to accomplish a similiar objective. He offers his customers a plexiglas "pad" to which two or three remotes can be attached using Velcro fasteners. The other side is used for a tuning guide.

Chapter Three—Hardware Modifications

Discussion

While external switching networks can return some of the utility of VCRs and remote controllable television sets, they cannot solve all the problems and those that are solved are at the cost of hardware and operating complexity. Further improvements require either modifications to the designs of converters or specially designed hardware. Several ideas are presented here with the intent of stimulating discussions in the industry leading to innovative long-term improvements.

Proposal I: Wideband Cable Feed Including Premium Services

Description

Under this proposal the input cable feed is split, one input line used for the descrambler input and the other fed to an output combiner. The descrambler output is recombined with the broadband input so that the output of the network would contain all clear channels plus one selected descrambled premium channel. Thus, normal television sets and VCR's could access services on standard television channels, extended tuning range devices could access all non-scrambled services and a selected premium service.

Such a device would allow access to premium services by second sets and VCRs without losing independent tuning

capability, although simultaneous access to multiple premium services would still be denied. It has the advantage that no additional wiring or switching functions are required.

Functional schematic:

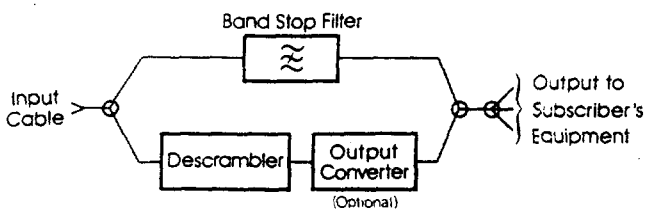

combiner would be required. The diagram below shows a baseband converter modified to put the added circuitry (shown in dark lines) completely within the device.

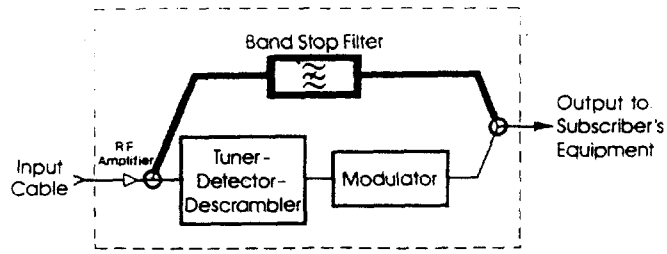

Detailed Discussion:

Key to implementation of this method is the choice made for the output channel. Either a blank channel must be allocated in the distribution system to allow for the reinsertion of the decoded signal, or a filter would have to be used to "create" such a channel. In that case, the cleared channel should contain programming of little or no worth in its as-received state, such as an encoded premium signal or space-filler character generator. A filter of some sort will likely be necessary in any case to avoid recombining distribution system noise with the converter output, though the requirements are not as stringent in that case. Since single channel filters which do not affect adjacent channels are very expensive to fabricate, it would be preferable to think in terms of removing one channel and degrading considerably each adjacent as well. Several frequency ranges suggest themselves:

- Channels above the maximum for the distribution system in question, but within the tuning range of "cable ready" sets are a possibility for older systems. In that case, the band-stop filter could be replaced with a low-pass filter at a significant cost savings.
- If several scrambled channels are grouped together, then there is no loss of utility in trapping out center channels of the group. There may even be a useful increase in security because of denying access to other scrambled services for pirate descramblers.
- Aircraft channels which had conflicts under the old signal leakage rules and which could not be activated without losing grandfathering privileges could be used since the converter output power levels are quite low.

Upon examining possible applications of this proposal, it becomes obvious that a significant cost savings could be realized if converters were available with bridged input connectors having little loss (or even slight gain) and also if converters were available with outputs on arbitrary channels so as to avoid any output channel conversion requirements. In such a case, little more than a two-way

Advantages:

- Fully simultaneous access to all non-scrambled services and any selected premium service is available for both television set and VCR and (potentially) additional sets as well.
- No additional user-operated controls and complexity are created in a single-cable installation and only one switch in a dual situation (compared to a simple descrambler connection).
- For the special case of single premium service installations, a potentially lower cost configuration results if descrambler tuner, remote control and other features are eliminated and this cost more than exceeds the cost of the filter required.

Disadvantages:

- Simultaneous access to only one premium channel is provided. Generalizing this system for additional channels requires either additional splitting and combining with attendent amplification problems, or series connection of networks. In any case, devices would have to be available with a variety of input and output channels for various permutations.
- Restraints may be placed on channel arrangement in the system so as to leave blank channels or adjacent "rejectable" channels.
- The lack of standardization of channel usage among cable systems will result in demand for many models of such a device, affecting economies of scale in manufacturing.
- Splitter losses may very well be such that amplification will be required, either integral to a modified descrambler or externally. In either case, there is a cost impact. If the amplification is external, then there are problems with an additional power cord behind the TV set.
- A lower cost single-service device forgoes one of the principal advantages of addressability, namely the easy changing of service levels.

An Alternate Configuration:

One possible realization of this technique is to put the output of the descrambler in the UHF television band and not recombine it with the remainder of the signals. The two outputs of the network can then either be connected directly to the UHF and VHF inputs on a television set or looped through the VCR and then to a television set. Zenith currently markets an external network based on this technique except that the UHF output is recombined with the direct cable signals.

Advantages:

- This approach eliminates both the filter and recombining network, thus saving cost. Also, additional amplification is generally not necessary as only one splitter is in the line.
- Modified descramblers or external networks could be standardized since one standard UHF channel could be used unless more than one descrambler were used for simultaneous access to additional scrambled services.

Disadvantages:

- Consumer video equipment is not standardized as to whether the VHF and UHF inputs use separate or a single input connector so recombining may not always be avoidable.
- Many extended tuning range VCR's and TV's do not have simultaneous access to cable mid- and super-band channels and UHF channels. Generally there is a relatively inaccessable switch which changes tuning modes. Certainly, for that equipment, the user gains less convenience by this technique.

Proposal II: Dual Channel Premium Decoder

Description:

This is a proposal for a dual-channel integrated decoder. It overcomes one fundamental limitation of all the proposals above presented in allowing simultaneous access to more than one scrambled channel. Since both decoders are included in a single package, the problem of insuring that both units stay in a single residence is solved. Also, certain economies are realized by elimination of some features, common power supplies, etc. The two descrambled outputs are available either separately or multiplexed on a single cable.

Functional schematic:

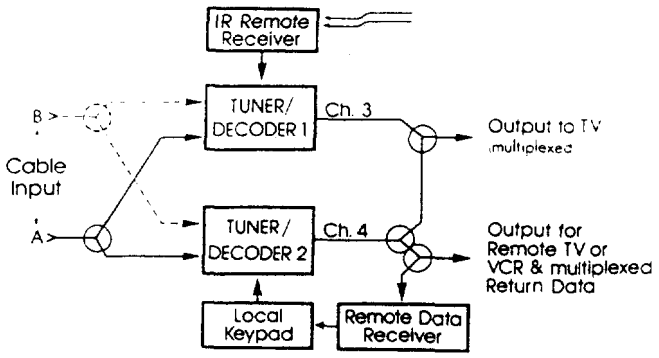

Detailed Discussion:

The proposed dual decoder is more than just two decoders in a single package. One of the decoders will be controlled by a local IR receiver from a wireless remote control unit. The second will be controllable either by the local keypad or by control signals multiplexed on its output RF line. Potentially a remote IR receiver or keypad of simple design could place keystroke data on this line that would duplicate the signals from the local keypad. This tuning arrangement would allow current package designs to be used since many incorporate both keypad and remote command entry. From a functional standpoint, it also makes sense since the second decoder is either used for a remote television which needs to access the tuning commands remotely or it is used with a VCR, in which case the local keypad would be preferable to a wireless remote anyway.

The second difference between this configuration and two individual decoders is that each has a modulator on a different channel. The RF MULTIPLEX output allows for both outputs to be on a single cable which is advantageous for VCR hookups. The output levels are set somewhat higher than for a normal converter to allow for the combining and the expected cascade of VCR and TV on the main output.

Finally, even though the hardware savings over two individual units may be minimal, the very fact of their inseparability and a single telemetry receiver means that one of the units cannot find its way to another subscriber. This means that an operator can comfortably charge lower

second outlet rates for the dual unit knowing that he has some protection against theft of services.

While the provision for an external remote control input adds some cost, it should be minimal and, in the long term, may coincide with requirements for such capability, depending on the direction of the EIA HOME BUS effort or the National Association of Home Builders (NAHB) SMART HOUSE project. Finally, it opens the possibility for direct control of tuning by the VCR timer via a signal transmitted out the VCR's input port, given a cooperative effort by the manufacturers involved.

Applications:

A. Standard VCR/Television connection:

1) Connection diagram

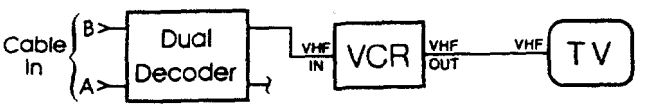

2. Features
- Independent selection of programming for VCR and television, including simultaneous access to multiple premium services.
- Simple wiring, simple installation, no level matching problems.
- Allows use of converter's wireless remote for control of one channel (television watching) and manual selection of another channel (recording).
- Increased security over separate converters.

3. Limitations
- Use of IR remote mandatory for one channel.
- Relatively high cost compared to simple switching systems.
- Prevents use of built-in remote controls and extended tuning ranges in customer's equipment.
- Will not allow timed recording sequence which require channel changes unless a timed channel change mechanism is also built into one of the decoders.
- Possibility of degraded reception due to use of two output channels, one of which may be used locally for off-air reception. Also, the degradation caused by the signal processing within the converter.

B. Second television outlet:

1) Connection diagram

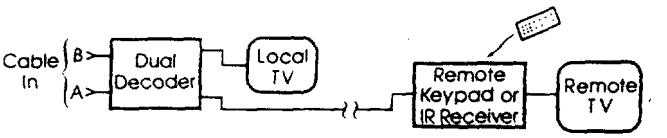

2. Features
- Allows two television sets to access separate premium programming without requiring separate descramblers, so lower second set rates are possible.
- May allow full wireless remote control for both sets.

3. Limitations
- With remote control on second set, the hardware cost may be more than the cost of two descramblers.
- If separate enabled levels or parental control are required, the cost will be higher.

C. Combination installation

1) Connection diagram

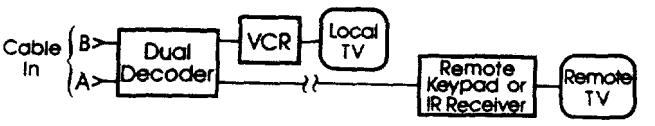

2. Features
A straight combination of the above allows for VCR plus second set installation with minimum complexity. It is limited to simultaneous access to two channels, whether scrambled or not, however any combination of two channels is possible.

Proposal III: Master-Slave Descramblers

Description:

The above proposal attempts to solve the problem of simultaneous access to multiple premium services by packaging two descramblers in a single package and providing both single and multiplexed outputs. An alternate proposal was presented by Tony Chen-tung Li of Oak Industries at the NCTA 1985 National Convention. Oak's proposal is to modify tdescrambtlers to optionally allow an alternate telemetry input from the normal distribution cable signal. The first descrambler in a home serves as a master unit and transmits control signals to the secondary units.

The advantages of such a scheme are:

- Less descrambler modification than the dual unit described above.
- It can be generalized to more than one slave unit.
- Each descrambler can be located at the video equipment served, thus simplifying channel selection for remote units.
- Secondary units, as above, cannot be used at other residences without wired connections.

The principal disadvantage is the added circuitry to provide for either master or slave operation of each unit with its associated cost. An additional factor may be the unique splitter configuration required.

Multiple Home Terminal Units: Subscriber Convenience—Security Risk

James R. Cherry, Director, Product Design Engineering
Tony Chen-tung Li, Manager, Product Design Engineering

Oak Communications Inc.
16516 Via Esprillo
Rancho Bernardo, California

Abstract

The need of the subscriber to simultaneously operate multipe TV sets and/or VCRs from his cable service has led to significant use of multiple home terminal units (HTU). If a subscriber pays a lower fee for a secondary HTU that is authorized to receive the same premium service as his primary unit, a risk exists that the unit will be sublet to a neighbor. For addressable cable systems using out-of-band data carriers, a master/slave configuration is proposed as a solution to the problem of subletting secondary units. The master/slave consists of two HTUs: The master used with the primary set and the slave used with the secondary sets. The slave unit does not function unless its address-control channel is protected by a master HTU. Thus, if the slave unit is used in a neighbor's home without its master, the secondary, or slave, unit will not function. Both master and slave HTUs can still respond with all addressable features. The uniqueness of the scheme lies in the selective blocking, by the master unit, of deauthorize commands directed at all slave HTUs. A high level of security is maintained without the requirement for complex, handshaking duplex data communications between the two HTUs.

Introduction

The HTU converts any cable channel to a channel that can be received by the standard TV receiver or recorder (typically channel 3 or 4) and it descrambles premium channels for which it is authorized.

If a subscriber desires to utilize a cable channel which is outside of the usable band in his TV receiver or recorder, or which is scrambled, he must do so through an HTU. For simultaneous use of multiple TV receivers or recorders to receive different cable channels, one HTU per video device must be used. Thus, we find some subscribers utilizing multiple HTUs for the convenience of operating second sets and VCRs.

In systems where a substantially lower fee is charged for premium services received on a subscriber's second or subsequent HTU, a significant security risk is incurred. The lower second-set fee can be the result of franchise agreement mandate or system policy.

Assuming that additional HTUs provided to a subscriber are identical to the initial unit, then they can be used on any outlet in the system to receive the service for which they are authorized. Thus, one subscriber can pay a nominal fee for a second HTU authorized to receive the same premium service as his primary unit, and sublet this unit to a neighbor, thereby circumventing the normal premium service fee.

The security risk is strongly a function of the subscriber cost differential between initial and subsequent HTUs. Also, it is a function of the social norms in the area covered by the franchise.

For addressable cable systems capable of out-of-band data transmission, a solution to the risk brought on by low-priced second sets is a system in which the HTU provided as a secondary set will only operate in the presence of a primary set . . . a master/slave arrangement.

The master/slave solution

Three approaches to master/slave configurations will be described: 1) master-to-slave control channel, 2) separate master-to-slave control line, and 3) control channel interruption.

1) Master-to-slave control channel

Figure 1 shows a functional block diagram of the master-to-slave control channel configuration. The control channel is assumed to be 10.7 MHz in this example.

Master HTU. The master HTU has been designed to retransmit the control channel back onto the input cable at 10.7 MHz. The master HTU is controlled by the standard control channel at 104.7 MHz.* The 10.7-MHz channel is interrupted whenever the master HTU receives an inhibit command from the headend via the standard control channel. The inhibit command is sent to all master HTUs in the system as a group. The duration of the 10.7-MHz channel interruption is of sufficient duration to disrupt the following message which is directed to only slave HTUs. The 10.7-MHz channel operates continuously as long as the master HTU is powered.

---

* 104.7 MHz is one of the FSK control data channel frequencies used in Oak systems. This data channel transmits a continuous stream of 64-bit message packets addressed to individual HTUs or groups of HTUs.

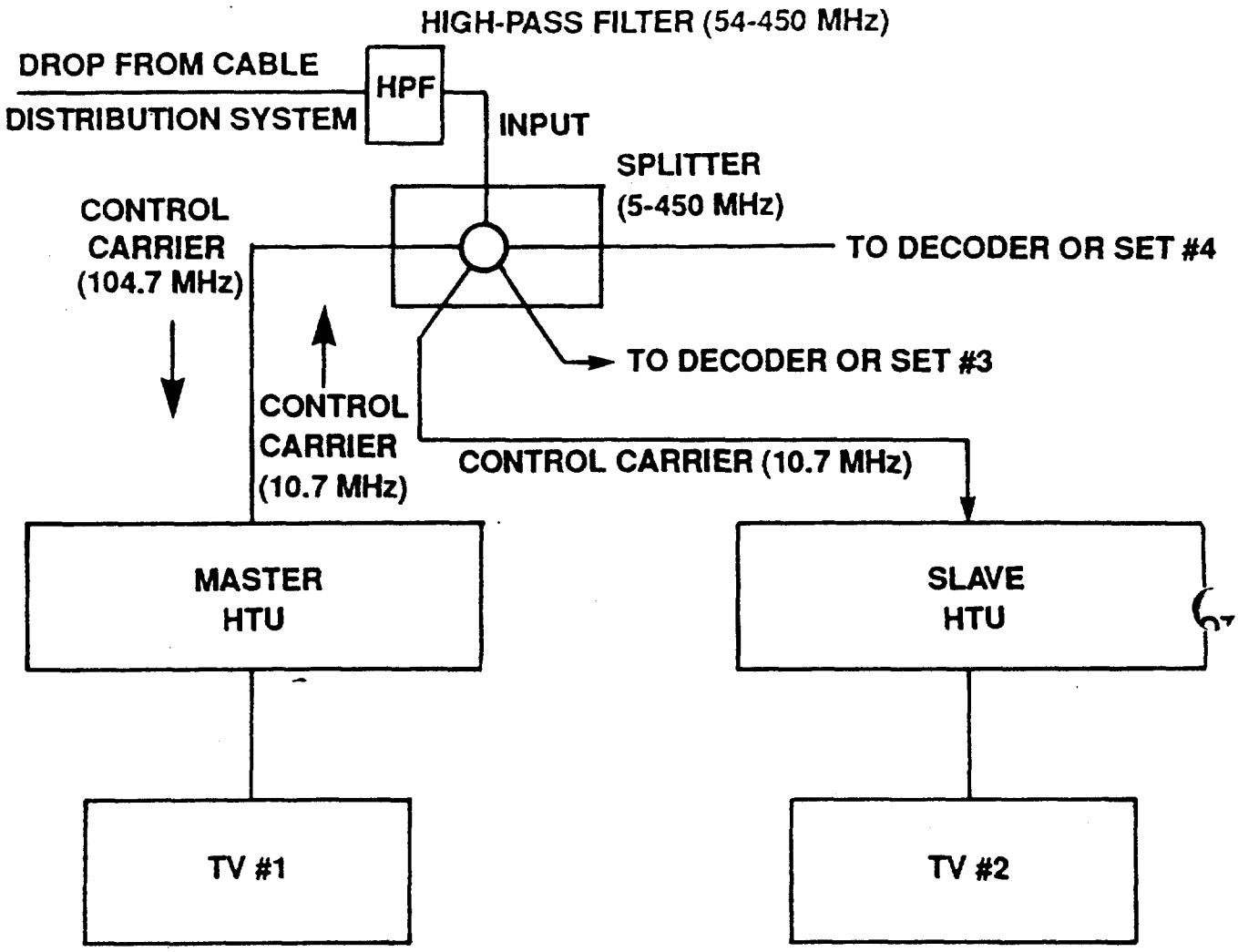

Figure 1. Master-to-slave control channel

Slave HTU. The slave HTU is designed to receive the 10.7 MHz-control signal retransmitted by the master HTU. The slave decoder can be addressed and controlled by the headend, provided that the control signal is received via the master HTU, which retransmits the 104.7-MHz control data at 10.7 MHz.

Periodically, deauthorize messages are sent to all slave HTUs as a group, preceded by an inhibit command sent to all master HTUs. If the slave decoder is receiving its 10.7-MHz control channel via a master HTU, the deauthorize signal will have been inhibited and the slave will continue to function normally. If the slave is connected to the control channel by an independent converter, (i.e. without the master being present), then it becomes deauthorized following reception of the first deauthorize message.

Both slave and master HTUs are manufactured identically and shipped as master HTUs. At installation a message from the headend is sent via the standard control channel that will configure designated HTUs as slaves. Slaves thereafter respond to only 10.7-MHz control.

Splitter. The splitter is standard, except for the requirement to pass the 10.7 MHz signal. The 10.7-MHz control signal is retransmitted from the master HTU to the splitter. The 10.7-MHz signal passes through the splitter to its input port and is reflected from the high-pass filter in that line. It is then, in turn, passed to the other output ports.

High-pass filter. A high-pass filter is used to block the 10.7-MHz signal from entering the system by reflecting the signal back into the splitter.

2) Separate master-to-slave control line

Figure 2 shows a functional block diagram of the separate master-to-slave control line configuration. This system operates on the same inhibit/deauthorize principle described in the master-to-slave control channel configuration.

Master HTU. The master HTU has been designed to transmit a control signal to the slave HTUs that will disable the slave's control channel during a deauthorize message that follows an inhibit message. As in the master-to-slave control channel scheme, an inhibit signal is put on the control line by a master HTU whenever an inhibit command is received from the headend via the standard control channel. The inhibit command is sent to all master HTUs in the system as a group. The duration of the inhibit signal on the control line is of sufficient duration to disrupt the following message which is directed to slave HTUs. The control line inhibit function operates as long as the master HTU is powered.

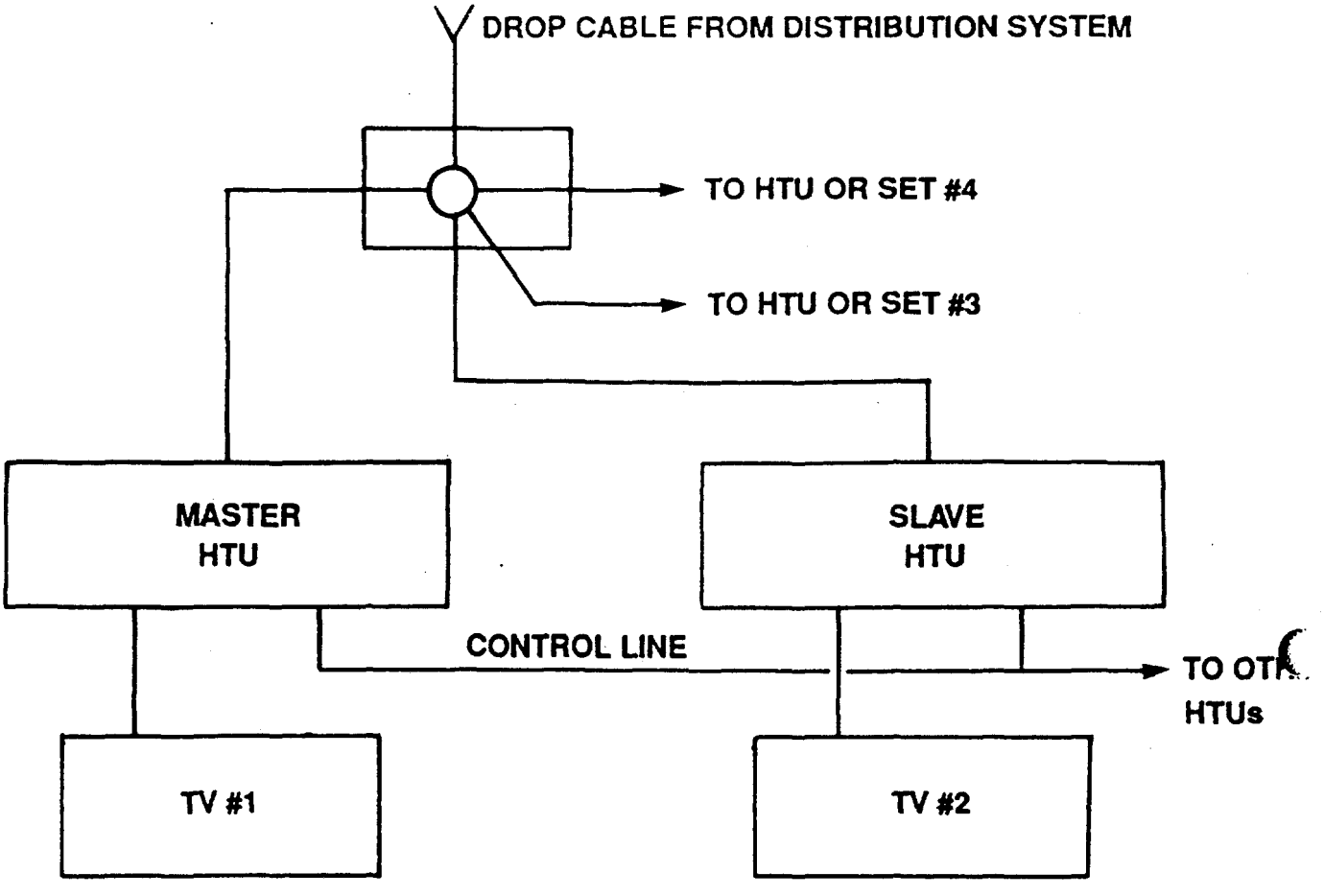

Figure 2. Separate master-to-slave control line

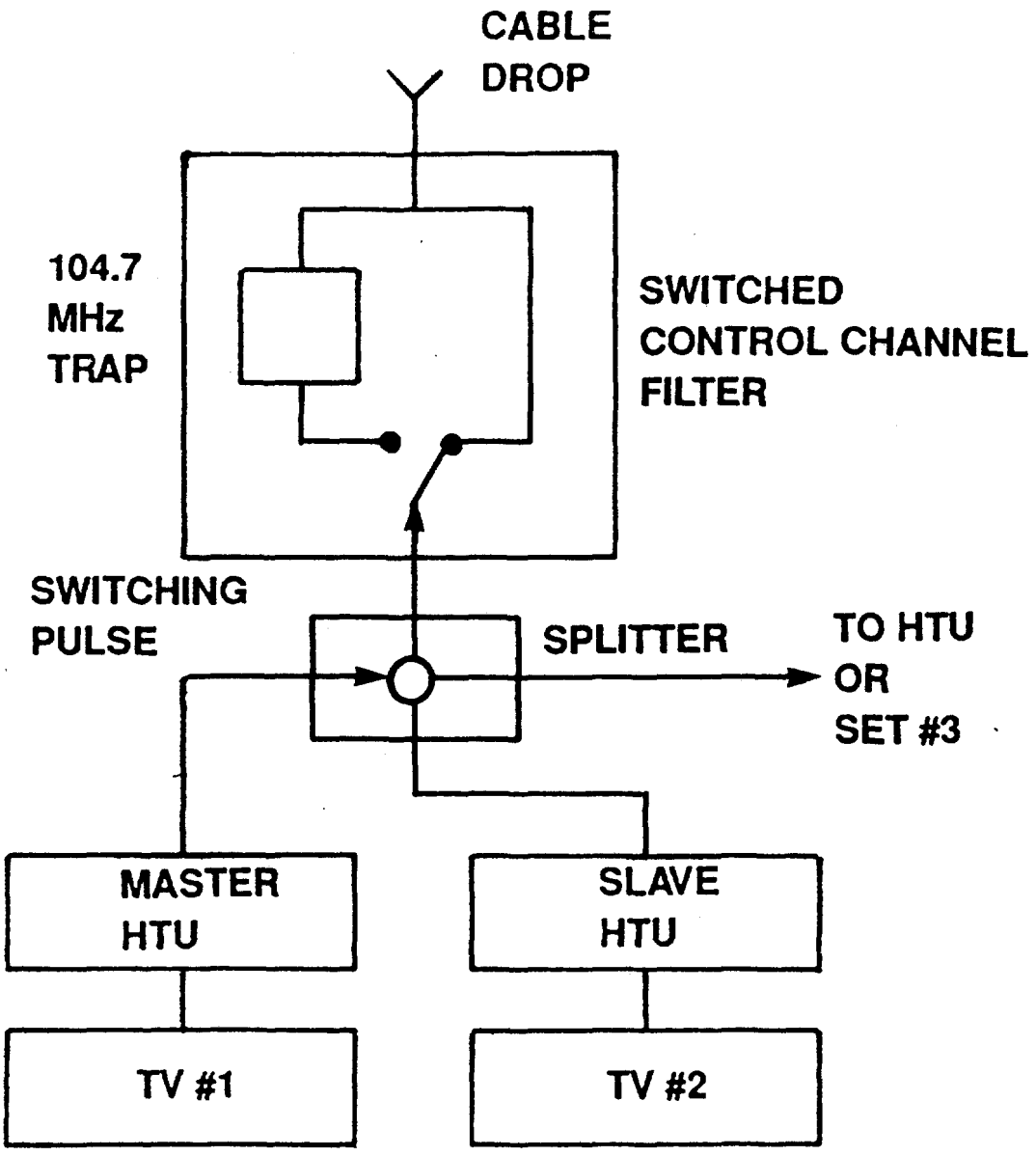

Figure 3. Control channel interrupt

Slave HTU. The slave HTU is designed to respond to the control line inhibit signal. When this signal is present, the standard control channel receiver is deactivated and no control messages can be received by the slave HTU.

Periodically, the headend sends deauthorize messages to all slave HTUs as a group, preceded by a group inhibit command sent to all master HTUs. If the slave HTU is connected to the control line from the master HTU it will be protected from the deauthorize command and will continue to function normally. If the slave is not connected to the control line it becomes deauthorized following reception of the first deauthorize message.

Both slave and master HTUs can be manufactured the same and shipped as master units. At installation a message from the headend can be sent via the standard control channel that will configure designated HTUs as slaves.

3) Control channel interruption

Figure 3 shows a functional block diagram of the control channel interrupt configuration.

Master HTU. The master HTU has been designed to transmit a switching pulse on the input cable. This switching pulse is transmitted by the master HTU immediately following reception of an inhibit command from the headend via the standard control channel. The inhibit command is sent to all master HTUs in the system as a group. The duration of the switching pulse is sufficient to prevent the reception of the following message which is directed to all slave HTUs. The switching pulse operation is executed as long as the master HTU is powered.

Switched control channel filter. The switched control channel filter is designed such that the signal from the cable drop normally passes directly through to a splitter, except when a switching pulse from a master HTU is imposed on the output port of the device, a control channel filter is switched into the line to interrupt the control channel. When the switching pulse is removed the device returns to normal operation, passing all signals on the cable. Another possible approach to designing this filter is to block all the RF signals on the cable for the entire pulse duration.

Slave HTU. In the control channel interrupt configuration, any addressable HTU that is system compatible can be used. At installation, a message from the headend will be sent to the slave HTU to make it associate with the slave group. Periodically, a deauthorize message is sent to all system slave HTUs as a group. If a slave is operated downstream from a master HTU-controlled switched control channel filter it will be protected from receiving the deauthorize command. If the slave HTU operates directly

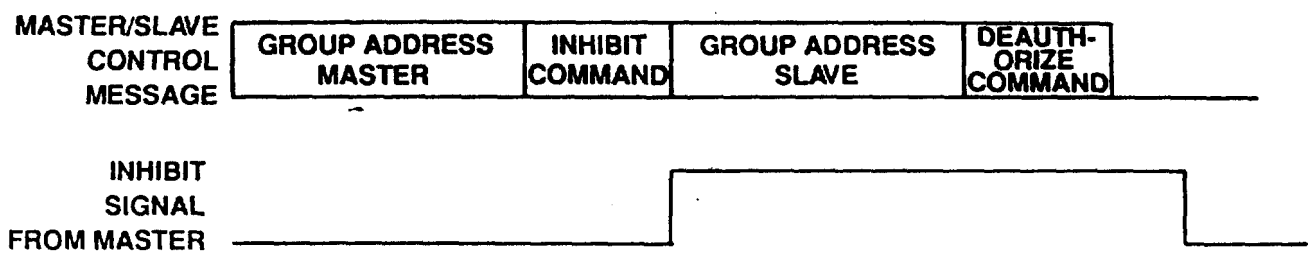

Figure 4. Timing diagram

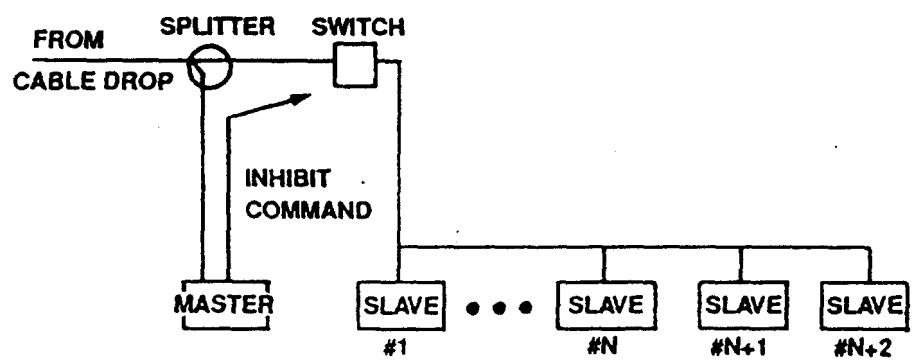

Figure 5. Extension to multiple dwellings

on the system it will deauthorize following reception of the first deauthorize message (see timing diagram in Figure 4).

Multiple dwelling applications

The control channel interrupt method can readily be extended to multiple dwelling situations where a large number of slave HTUs are required on the master HTU (see Figure 5). This can offer an interesting alternative to off-premises equipment in situations where unauthorized migration and use of home terminals are the principal concern.

There is no restriction on the number of slaves in one building. Each building would be treated as a separate group with its own group address. Thus, slave HTUs from one building would be useless in any other building. However, it should be pointed out that level differences in the cable spectrum between the trap on/off states of the switched control channel filter may create disturbances visible in the TV picture. Also, it does not prevent transfer of slave HTUs within the designated building.

Message security

Central to the above approaches is a technique of informing the master units of an impending slave disable command. In any system employing the described approach, the ability of a pirate to covertly mimic the master's message interruption process must be examined. The Oak approach to this danger, as well as other dangers of control channel manipulation (or tampering), is to encrypt all control channel messages using a time-varying process. Thus, a pirate will be unable to detect the slave disable warning message going to the master units. Patents are currently being filed for these approaches as well as the master/slave concept.

Summary

The problem of secondary HTU theft for addressable cable systems is a major concern for system operators that offer lower rates for secondary HTUs. The master/slave solution will eliminate that risk.

The control channel method requires transmission of the control signal at 10.7 MHz instead of a switching DC pulse used by other approaches. The advantages of this method are that there is no requirement for external hookups between the master and slave HTUs and that only RF signals are present on the cable.

The master HTU for the control line approach can also send a switching (DC-coupled) pulse via the RF cable instead of the external connection to each slave HTU. Several commonly used splitters tested were found to pass DC without significant degradation. During the pulse duration, a data channel message is transmitted to command the slaves to deauthorize. Thus, HTUs that are not linked to a master HTU sending such a pulse will be deauthorized for viewing. However, if the switching pulse is carried by the RF cable to each slave HTU, DC blocking devices must be used to avoid DC shorts in the cable throughout the subscriber's home. This can happen if the customer decides to hook up a VCR to the RF cable.

For both the control channel and the control line methods, the deauthorize command can be sent as frequently as desired by the system operator. While in the control channel interrupt method, the deauthorize command frequency should be limited to a minimum since the switched control channel filter may cause picture interference during switching.

For all three approaches described, the master and slave HTUs can be manufactured and shipped identically. At installation the HTUs can be reprogrammed from the central control computer to function as master or slave HTUs. The control message will utilize a time-varying encryption process to ensure maximum security. These techniques are currently under development at Oak Communications in San Diego.

Appendix A

Dr. Walter Ciciora
Vice President, Research and Development
American Television and Communications Corp.
160 Inverness Drive West
Englewood, CO 80112

Dear Walt:

Enclosed is the first official submission of the Consumer Interconnect Subcommittee to the Engineering Committee. I am sending it to you as committee chairman and requesting approval of the full NCTA Engineering Committee. Given that there is a heightened awareness in the industry of consumer interconnect problems and a range of new equipment coming on the market to neet that need, I would suggest that this information be disseminated as soon as possible. Perhaps a direct mailing to manufacturers known to make equipment for that market and member system's engineering departments combined with publication in an industry technical journal would be appropriate. I would like to publicly thank those committee members who contributed to the final product for their efforts, most especially my co-authors: yourself, Joe Van Loan, Al Kernes, Judson Hofmann, James Cherry and Tony Chen-tung Li.
We have not yet determined the best future direction for our efforts and would welcome the Committee's inputs as to whether to disband or, if not, the most productive area to investigate.

Sincerely,
David J. Large
Engineering