MODEL #3 HDTV - EXTENSIVE LOCAL PLAYBACK CAPABILITIES

2	HD compressed format VTR's	$80K/each	$160K
1	HD compressed format video cart machine	$800/each	$800K
	HD router expansion		$40K
8	HD B&W monitors (8")	$2K/each	$16K
		Subtotal	$1,016K
	Installation Materials (5%)		$51K
		Model 3 Total	$1,067K
		Total for Models 1, 2 and 3	$2,343K

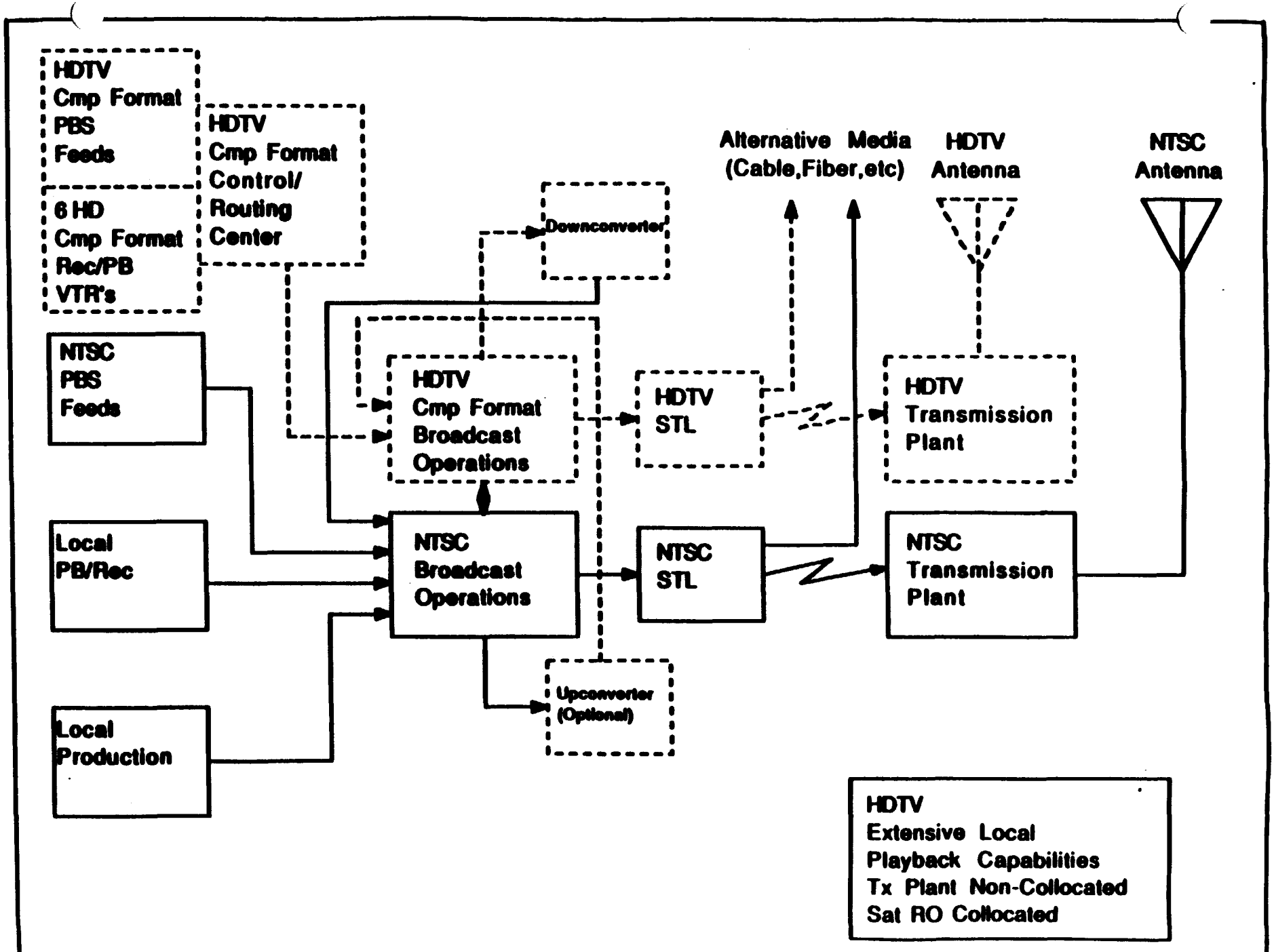
HDTV
Cmp Format
PBS
Feeds
6 HD
Cmp Format
Rec/PB
VTR's
HDTV
Cmp Format
Control/
Routing
Center
Downconverter
Alternative Media
(Cable,Fiber,etc)
HDTV
Antenna
NTSC
Antenna
NTSC
PBS
Feeds
HDTV
Cmp Format
Broadcast
Operations
HDTV
STL
HDTV
Transmission
Plant
Local
PB/Rec
NTSC
Broadcast
Operations
NTSC
STL
NTSC
Transmission
Plant
Upconverter
(Optional)
Local
Production
HDTV
Extensive Local
Playback Capabilities
Tx Plant Non-Collocated
Sat RO Collocated

MODEL #4 HDTV - PRODUCTION/POST/REMOTE CAPABILITIES

Broadcast Format Equipment (Compressed Format)

2	HD compressed format VTR's	$80K/each	$160K
	HD router expansion		$40K
4	HD B&W Monitors (8" Dual)	$2K/each	$8K
1	HD STL (Add Redundancy)	$48K/each	$48K
		Distribution Subtotal	$256K

MODEL #4 HDTV - continued

Production Format Equipment (Wideband Format)
(all of the following operates in a full bandwidth format)

Studio Production Equipment

3	HD VTR's	$320K/each	$960K
1	HD routing switcher	$160K/each	$160K
3	HD cameras	$375K/each	$1125K
1	HD switcher	$400K/each	$400K
	HD signal distribution/processing		$35K
1	HD DVE	$250K/each	$250K
	HD signal distribution		$75K
1	HD compressed/Full Band Format Converter	$50K/each	$50K
1	HD character generator	$120K/each	$120K
	HD sync system/distribution		$75K

MODEL #4 HDTV - continued

2	HD Color Monitors (28")	$25K/each	$50K
4	HD Color Monitors (18")	$11K/each	$44K
13	HD B&W Monitors (14")	$3.7K/each	$48K
8	HD B&W Monitors (8")	$2K/each	$16K
8	HD Utility WM's	$6K/each	$48K
1	HD Frame Synchronizer	$38K/each	$38K
	HD Test Equipment		$100K
1	HD Precision WM	$12K/each	$12K
1	HD Precision Signal Monitor	$20K/each	$20K

Field Production

1	HD field camera	$375K/each	$375K
1	HD field VTR	$320K/each	$320K

MODEL #4 HDTV - continued

Post Production

1	HD editing system	$50K/each	$50K
1	HD editing switcher/signal processing		$350K
1	HD DVE	$250K/each	$250K
1	HD paint system	$500K/each	$500K
1	HD character generator	$120K/each	$120K
4	HD color monitors (18")	$11K/each	$44K
8	HD B&W monitors	$2K/each	$16K
2	HD utility WM	$6K/each	$12K
1	HD Signal Monitor	$20K/each	$20K
		Production Subtotal	$5,683K
	Installation Materials/Spares (5%)		284K
		Production Total	$5,967K
		Model 4 Total	$6,223K
	Total for Models 1, 2, 3, & 4		$8,566K

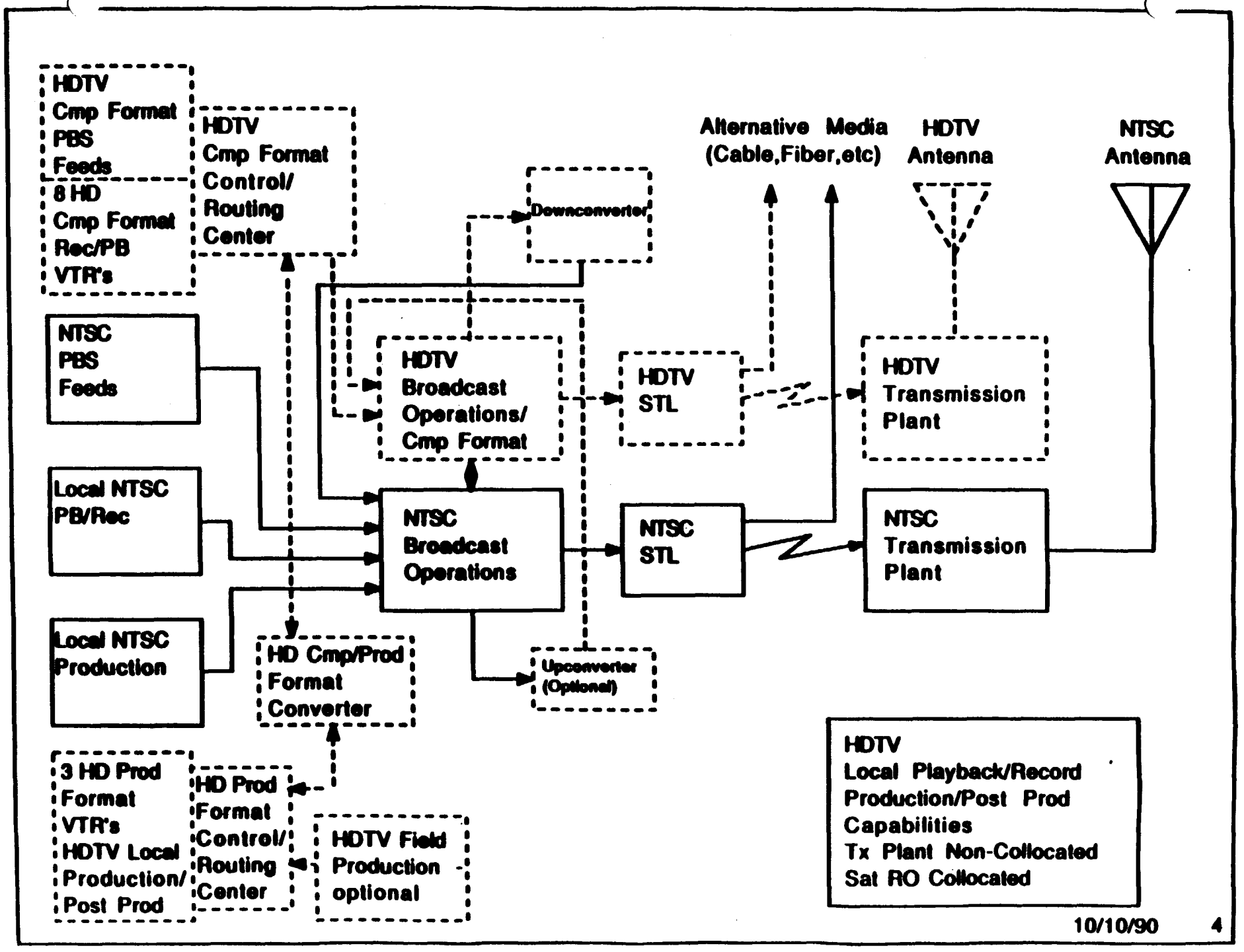
HDTV
Cmp Format
PBS
Feeds
8 HD
Cmp Format
Rec/PB
VTR's
HDTV
Cmp Format
Control/
Routing
Center
Downconverter
Alternative Media
(Cable,Fiber,etc)
HDTV
Antenna
NTSC
Antenna
NTSC
PBS
Feeds
HDTV
Broadcast
Operations/
Cmp Format
HDTV
STL
HDTV
Transmission
Plant
Local NTSC
PB/Rec
NTSC
Broadcast
Operations
NTSC
STL
NTSC
Transmission
Plant
Local NTSC
Production
HD Cmp/Prod
Format
Converter
Upconverter
(Optional)
3 HD Prod
Format
VTR's
HDTV Local
Production/
Post Prod
HD Prod
Format
Control/
Routing
Center
HDTV Field
Production
optional
HDTV
Local Playback/Record
Production/Post Prod
Capabilities
Tx Plant Non-Collocated
Sat RO Collocated

10/10/90 4

MODEL #5 HDTV - FULL CONVERSION

4	HD wideband VTR's	$320K/each	$1,280K
8	HD B&W monitors (8")	$2K/each	$16K
	Subtotal		$1,296K
	Installation Materials (5%)		$65K
	Model 5 Total		$1,361K
	Total for Models 1, 2, 3, 4, & 5		$9,776K

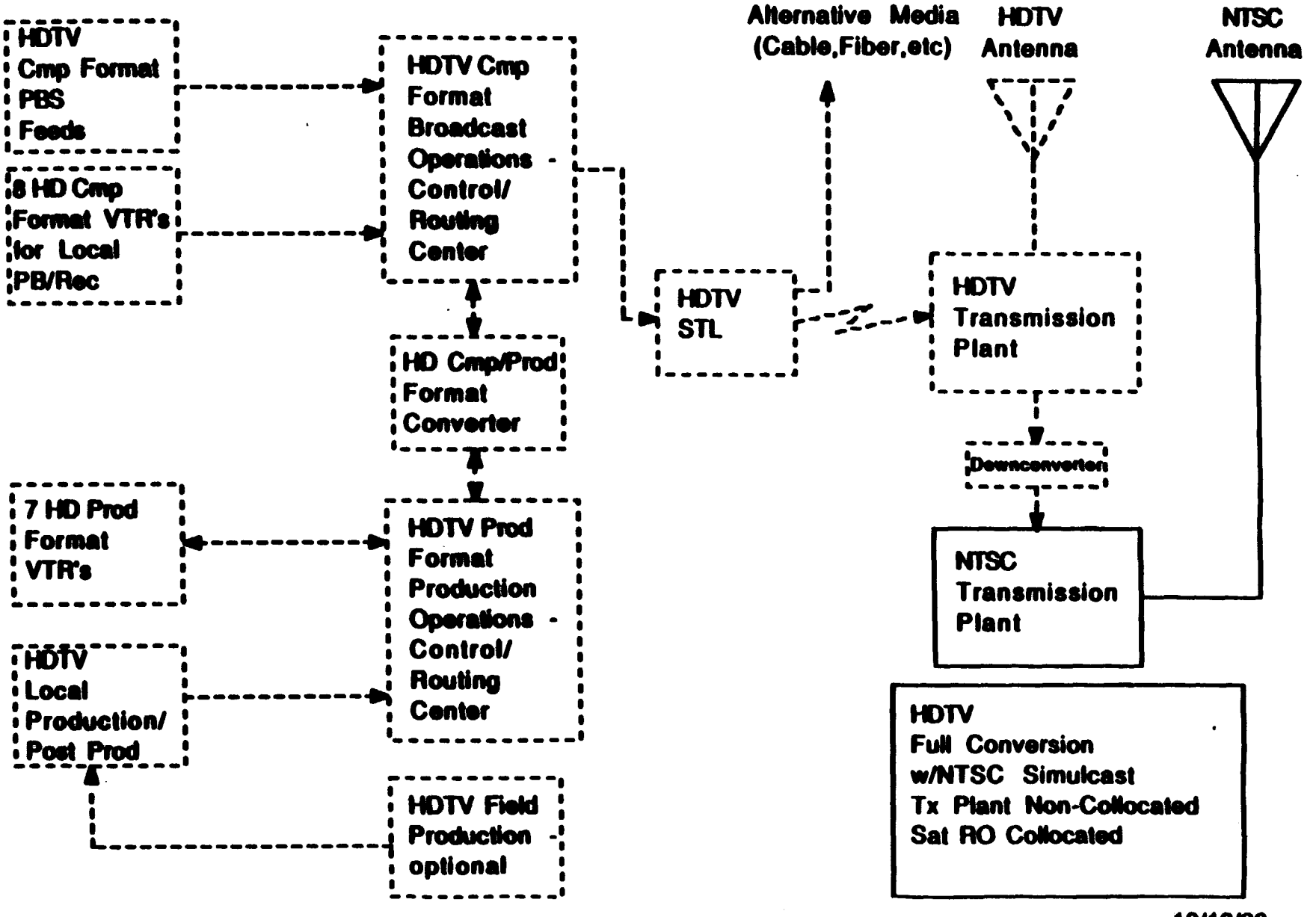
HDTV Cmp Format PBS Feeds
8 HD Cmp Format VTR's for Local PB/Rec
HDTV Cmp Format Broadcast Operations - Control/ Routing Center
HD Cmp/Prod Format Converter
7 HD Prod Format VTR's
HDTV Prod Format Production Operations - Control/ Routing Center
HDTV Local Production/ Post Prod
HDTV Field Production - optional
HDTV STL
Alternative Media (Cable,Fiber,etc)
HDTV Antenna
NTSC Antenna
HDTV Transmission Plant
Downconverter
NTSC Transmission Plant
HDTV Full Conversion w/NTSC Simulcast Tx Plant Non-Collocated Sat RO Collocated

VII. Complete Station Packages

Pass-Through Network Programming

VHF Station, Low Band (best case)	
Transmission Package 1	$936K
Broadcast Origination (Model 1)	$770K
Total	$1.706M
VHF Station, Low Band (worst case)	
Transmission Package 2	$3,484K
Broadcast Origination (Model 1)	$770K
Total	$4.254M
VHF Station, High Band (best case)	
Transmission Package 3	$986K
Broadcast Origination (Model 1)	$770K
Total	$1.756M
VHF Station, High Band (worst case)	
Transmission Package 4	$3,534K
Broadcast Origination (Model 1)	$770K
Total	$4.304M
UHF Station (best case)	
Transmission Package 5	$1,116K
Broadcast Origination (Model 1)	$770K
Total	$1.886M
UHF Station (worst case)	
Transmission Package 6	$3,664K
Broadcast Origination (Model 1)	$770K
Total	$4.434M

Limited Playback

VHF Station, Low Band (best case)	
Transmission Package 1	$936K
Broadcast Origination (Model 2)	$1,276K
Total	$2.212M
VHF Station, Low Band (worst case)	
Transmission Package 2	$3,484K
Broadcast Origination (Model 2)	$1,276K
Total	$4.760M
VHF Station, High Band (best case)	
Transmission Package 3	$986K
Broadcast Origination (Model 2)	$1,276K
Total	$2.262M
VHF Station, High Band (worst case)	
Transmission Package 4	$3,534K
Broadcast Origination (Model 2)	$1,276K
Total	$4.810M
UHF Station (best case)	
Transmission Package 5	$1,116K
Broadcast Origination (Model 2)	$1,276K
Total	$2.392M
UHF Station (worst case)	
Transmission Package 6	$3,664K
Broadcast Origination (Model 2)	$1,276K
Total	$4.940M

Production

VHF Station, Low Band (best case)	
Transmission Package 1	$936K
Broadcast Origination (Model 4)	$8,566K
Total	$9.502M
VHF Station, Low Band (worst case)	
Transmission Package 2	$3,484K
Broadcast Origination (Model 4)	$8,566K
Total	$12.050M
VHF Station, High Band (best case)	
Transmission Package 3	$986K
Broadcast Origination (Model 4)	$8,566K
Total	$9.552M
VHF Station, High Band (worst case)	
Transmission Package 4	$3,534K
Broadcast Origination (Model 4)	$8,566K
Total	$12.100M
UHF Station (best case)	
Transmission Package 5	$1,116K
Broadcast Origination (Model 4)	$8,566K
Total	$9.682M
UHF Station (worst case)	
Transmission Package 6	$3,664K
Broadcast Origination (Model 4)	$8,566K
Total	$12.230M

APPENDIX B

HIGH DEFINITION TELEVISION

TRANSITION SCENARIO FOR TV STATIONS

A CBS WORK-IN PROGRESS

February 20, 1991

Preliminary Results

TABLE OF CONTENTS

1. Introduction
2. Premises and Assumptions
3. Phased Implementation
4. Transition Scenarios
5. Cost Assumptions
   - 5.1 Labor
   - 5.2 Transmission Signal Format
   - 5.3 Economies of Scale
   - 5.4 Reuse of Existing Equipment
6. Capital Costs
   - 6.1 Incremental Capital Cost
   - 6.2 Capital Depreciation Charges
7. Transition Schedules
8. Conclusions

APPENDICES

A. Towers for Simulcast Advanced Television Systems

HIGH DEFINITION TELEVISION

TRANSITION SCENARIO FOR TV STATIONS

A CBS WORK-IN-PROGRESS

1. INTRODUCTION

High Definition Television is a major technical advance over the present NTSC broadcast system. Having twice the resolution, improved color rendition, a wide screen aspect ratio, and digital stereo sound, HDTV may prove to be the medium of choice for the home viewing by the turn of the century.

No regulatory or technical barriers hinder the introduction of wide-band high definition service to the home through the distribution media of home video, cable, or direct broadcast by satellite.

Terrestrial broadcasting, however, in attempting to compete with these new high quality services, faces a special challenge. High definition television intrinsically requires a greater transfer of information than can be obtained within the 6 MHz currently allowed for by NTSC television. The radio frequency spectrum is crowded, and the limited spectrum available precludes an unlimited allocation for the use of a new wide bandwidth terrestrial transmission system.

Past Chairman of the FCC, Dennis Patrick, formed an Advisory Committee in Advanced Television Service (ACATS) in 1987, with a mandate to study and test proposed systems for the terrestrial broadcast of Advanced Television, and to make recommendations for the selection of a standard.

Under the chairmanship of Richard Wiley, a past Chairman of the FCC, ACATS has made much progress in the last three years. In 1988 the FCC

In addition to detailed spectrum studies and the test and evaluation of proposed systems, ACATS is developing assessments of the cost of converting local TV stations for HDTV terrestrial broadcast. This work is being performed by the System Subcommittee's Working Party 3.

CBS is contributing to this effort with an ongoing study of the costs of implementing HD terrestrial broadcast service, and this interim report details the results to date.

While recognizing that ATV service using improved and extended definition TV technology may prove attractive from the broadcasters' point of view, this study is concerned only with full HDTV service. This is in accord with present FCC policy, which is to first assess a high definition --and not an extended definition, or EDTV--transmission standard.

Following Chairman Sike's policy directive, this report considers only HDTV simulcast systems. A simulcast system is one in which the existing NTSC broadcast channel remains unimpaired (an FCC requirement), and a second 6 MHz channel is allocated for the transmission of HDTV programs. Thus, a television station may transmit a program in HDTV and NTSC simultaneously.

The simulcast approach will permit system designers the opportunity to seek the best possible system for terrestrial broadcast, and will allow stations to start HD service only when it is economically advantageous for them to do so.

This report thus represents a work-in-progress, and invites a dialogue on the complex issues confronting the industry on the timing, phasing, and the cost of the transition to HD.

The CBS study is continuing, and is supported by important contributions from CBS affiliate stations, who are providing data on their past, current, and projected capital investments, and on the feasibility of adding a HD transmitting antenna to their towers.

2. PREMISES AND ASSUMPTIONS

A number of important working premises and financial assumptions have been made in developing transition scenarios. These are outlined in Figure 1, listed below, and discussed in more detail later.

(i) Stations in the larger markets will be the first to make the transition to HD, not unlike the introduction of color television.

(ii) The transition will be conducted in phases, with each phase adding to the HD service provided by a station. Stations in larger markets will complete the transition in a shorter time than smaller market stations who may thus spread the capital investment program over a longer period. This again is similar to the introduction of

(iii) The labor cost of transition is 20% of the investment in capital equipment.

(iv) The transmission system selected will be all-digital and thus will require a much lower Effective Radiated Power (ERP) than current NTSC systems to reach the same audience. With a resulting, relatively small, HD transmitting antenna, the existing tower can be used.

(v) The initial prices for equipment are based on developmental and prototype units. For the period considered, with each doubling of the number of units manufactured, the cost will fall by 10% of the prior cost.

(vi) Existing plant, studio, and control room audio equipment will be reused, not replaced. It is further assumed that a station has previously converted to stereo.

SIMULCAST HDTV TRANSITION SCENARIO ASSUMPTIONS

- LARGER MARKET STATIONS WILL CONVERT FIRST
- TRANSITION IN PHASES, SPREAD OVER 5-9 YEARS
- LABOR TO INSTALL THE CAPITAL EQUIPMENT: 20% OF CAPITAL EQUIPMENT COST
- TRANSMISSION FORMAT WILL HAVE LOWER ERP THAN NTSC - SMALLER ANTENNA PERMITS INSTALLATION ON PRESENT TOWER
- EACH DOUBLING OF HD EQUIPMENT MANUFACTURED WILL LEAD TO 10% REDUCTION IN PRIOR COST
- EXISTING AUDIO EQUIPMENT WILL BE REUSED, NOT REPLACED

FIGURE 1

3. PHASED IMPLEMENTATION

The introduction of a HDTV transmission service at a TV station will be a gradual process and will be implemented in phases. Each phase provides an incremental capability, and builds upon the preceding phases. (Figure 2) The number of phases, and the nature of the capability added in each phase, may vary from market-to-market or from station-to-station. Here is one, six-phase scenario:

Phase A: Network Pass-through

This is the minimum conversion necessary to deliver network supplied HDTV programming to a market. An additional transmitter and antenna will need to be purchased and installed, together with an additional studio-transmitter link, using microwave or fiber optics. Additional satellite earth station equipment for the reception of network programs, and some distribution, test, and monitoring equipment will be required. The only local origination is the insertion of station identification announcements.

Phase B: Local Commercials

In phase B, additional equipment will be added by the station to allow for local commercial inserts within the network programs.

Phase C: Local Videotape Programming

Video tape equipment will next be added to allow for playback of non-network (syndicated) programming when the network is not supplying HDTV programs.

SIMULCAST HDTV SCENARIO
PHASES OF TRANSITION

PHASE

A - PASS-THROUGH OF NETWORK HD PROGRAMS

B - INSERTION OF LOCAL COMMERCIAL MESSAGES

C - PLAYBACK OF NON-NETWORK SYNDICATED HD PROGRAMS

D - LOCAL ORIGINATION OF HD PROGRAMS

E - COMPLETE PLANT CONVERSION TO HD

F - LOCAL NEWSGATHERING (ENG) IN HD

FIGURE 2

Phase D: Local Studio Origination

A local station in this phase becomes an HDTV production facility. Phase D will add equipment to allow local production to be staged, recorded, edited, and broadcast.

Phase E: Final Plant Conversion

The entire plant systems are next upgraded, giving the station full HDTV capability. All production and origination, except for news gathering, is in HDTV. At this stage when the network transmits a program only in HDTV, the local station will down-convert the signal for the NTSC simulcast.

Phase F: Electronic News Gathering

This phase requires the conversion of the Electronic News Gathering (ENG) equipment to HDTV. At this point all local production is effected in HDTV, and the HDTV signal will be down-converted for NTSC simulcast.

4. TRANSITION SCENARIO

The six phases of conversion identified above are designed to provide an incremental capability with the completion of each phase. The block diagram in Figure 3 presents the completely converted station, with each phase outlined.

Phase A: - Network Pass-through

Shows the acquisition of an earth station receiving a satellite signal. The signal is decoded and routed to a switcher.

HD STATION CONVERSION BLOCK DIAGRAM

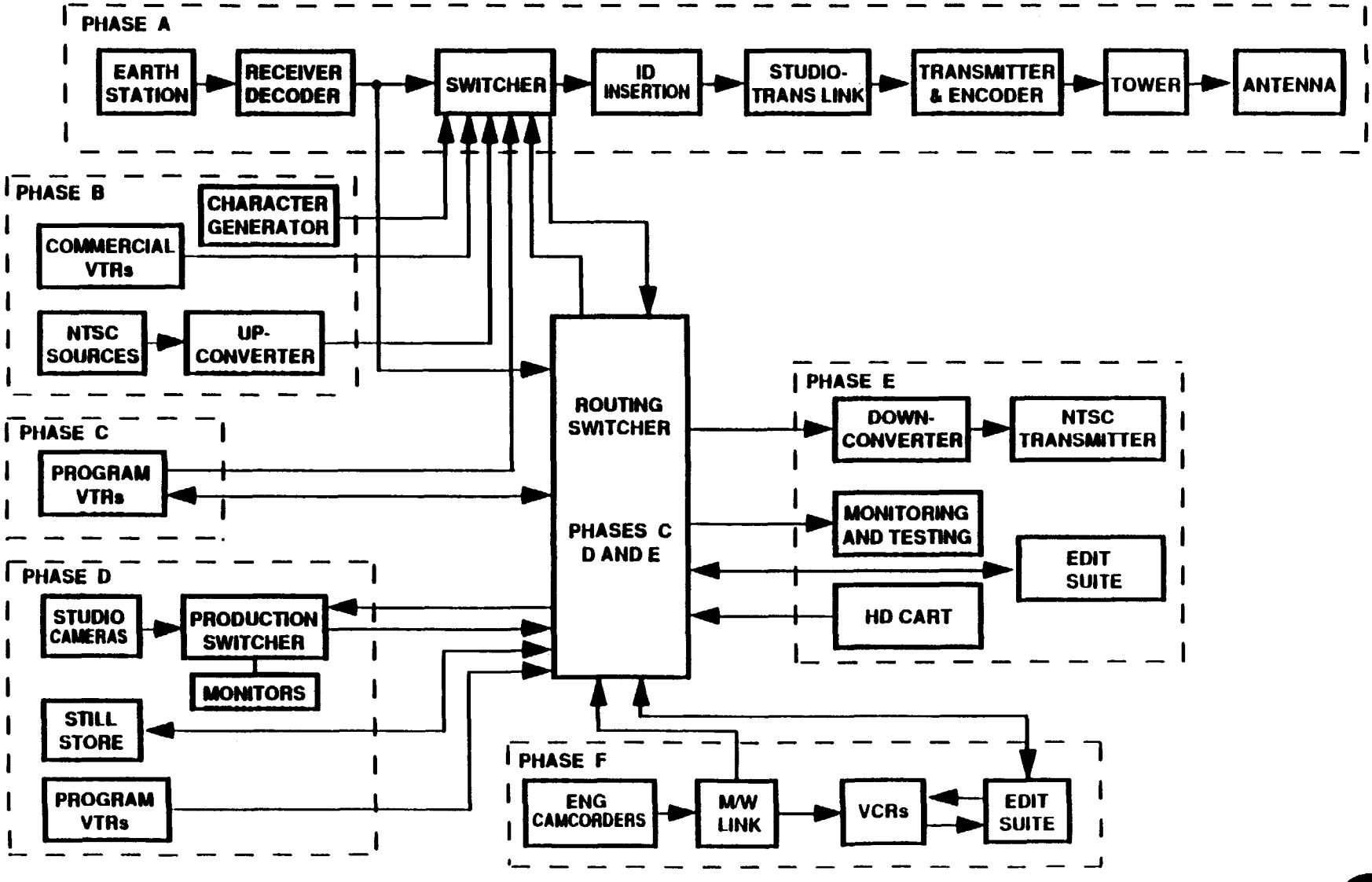

FIGURE 3

In this first phase, the switcher need only be of relatively simple design, to be expanded in later phases.

A station ID is inserted at this point. The signal is then encoded and fed through the STL to the transmitter and antenna.

Phase B: - Local Commercial Insertion

Two VTRs for the playback of HD commercials are added, feeding an automation switcher. When only NTSC commercials are available, an up-converter may be installed, increasing the 525 lines of NTSC.

Phase C: - Local Playback of Non-Network Programs

Requires the addition of program VTR's and a routing switcher.

Phase D: - Local Origination

Requires the addition of studio cameras, VTRs, and a production switcher.

Phase E: - Final Plant Conversion

Calls for the addition of a down-converter in order to feed HD programs to the NTSC transmitter for simulcast operations. An HD cart machine for the playback of commercials is added in this phase, together with test and monitoring facilities.

Phase F: - ENG

Requires the addition of HD camcorders, VCRs, and editing facilities. Existing microwave links will be used.