MM 87-268

RECEIVED

SEP 10 1992

FEDERAL COMMUNICATIONS COMMISSION
OFFICE OF THE SECRETARY

Rec'd 9/10/92

ORIGINAL FILE

IS/WP2-0236
26 AUG 92

ADVISORY COMMITTEE ON ADVANCED TELEVISIONS SERVICE
IMPLEMENTATION SUBCOMMITTEE
WORKING PARTY 2 - TRANSITION SCENARIOS
MINUTES OF FORTY-SECOND MEETING 8/20/92

1. The meeting was called to order by Vice Chairman, Merrill Weiss, at 10:10 A.M. at PBS in Alexandria, VA.

2. The agenda was adopted with the following additions:

   3a) Transmitter/Antenna Manufacturers Survey
   5a) Distributed Transmission Issue
   7a) Proponent Response Summary Analysis
   8a) Preparation for Implementation Subcommittee Report
   10a) Preparation of Next Meeting Agenda.

3. The minutes of the 6/2/92 meeting were approved with the following change:

   Page 4, change SS/W1 to SS/WP1.

4. A list of attendees is attached.

5. Review of Action Items.

   a) Carry as action item.

   b) Complete - cover under agenda item 5.

   c) Carry as action item.

   d) Complete.

   e) Complete.

   f) Partially complete, carry as action item.

6. Transmitter and Antenna Manufacturers Survey.

   Merrill Weiss distributed a draft report on the telephone survey of transmitter and antenna manufacturers. The Working Party reviewed this draft and made several suggested

modifications. The revised document is attached (IS/WP2-0228) and will be presented at the 8/25/92 Implementation Subcommittee Meeting. The survey indicates that the availability and installation of antenna/transmitter equipment may be a potential issue in the ATV implementation process.

7. Software Survey.

Merrill Weiss reported that he is nearly complete with survey responses from eight software producers and that four additional will be completed in the near future. Merrill will write a summary report draft and review with selected WP2 members. The report will be presented at the 8/25/92 Implementation Subcommittee meeting. IS/WP2-0029.

8. Local Area Groups.

Dave Folsom reviewed the new Local Area Group locations that have been established and reported that leaders have been selected for all Groups except Dallas/Ft. Worth and Oklahoma City. The instruction letter sent to the new Groups is shown in attachment IS/WP2-0232.

Merrill Weiss distributed an analysis of HDTV broadband antenna performance provided to Jules Cohen by LDL Communications, Inc. IS/WP2-0230. Merrill also distributed a theoretical analysis of proponent peak to average power levels provided to Jules Cohen by the Canadian Communications Research Center. IS/WP2-0231. Since this is an extremely important topic for IS/WP2 work, Merrill Weiss/Craig Tanner will discuss with Dick Wiley the release of ATTC power measurement data for IS/WP2 use.

9. Distributed Transmission Concept.

Merrill Weiss distributed a letter sent to Birney Dayton, SS/WP1, requesting their assistance in providing a technical analysis of the distributed transmission concept. IS/WP2-0233. Merrill will also provide additional detail on this subject for SS/WP1 analysis. SS/WP1 will provide results of this analysis for IS/WP2 use.

10. Final Report Preparation.

No further work has been done. A conference call will be scheduled prior to the next meeting.

11. Review of Proponent Responses.

Merrill Weiss presented revision 3 of the Summary of Responses to Questions for Proponents. IS/WP2-0225. The revision 1 version attached to the 7/2/92 minutes was a draft. The revision 3 document reflects comments from the 7/2/92 IS/WP2 meeting and proponent comments from ATRC. ATRC's comments reflected in this document are shown in IS/WP2-0234.

Merrill Weiss distributed a draft of a comparative analysis of the proposed ATV systems from an implementation standpoint. Much of the material was derived from proponent responses, but other inputs and work done by the Working Party is also reflected in the analysis. A discussion took place on the approach and general direction of this document. The Working Party was in general agreement that such a comparative analysis is very

useful (and was part of the original IS/WP2 charter), but is also likely to be sensitive and controversial. Craig Tanner was of the opinion that the topic of extensibility will be the most difficult to address on a comparative basis. Craig also suggested that the topic of of technical information availability include the issue of intellectual property disclosure. Larry Cochran suggested that the topics of little or no differentiation among proponents be segregated from those likely to surface as implementation differences. Merrill Weiss will revise the document and review with other selected Working Party members prior to the next meeting.

GI's response to the questionnaire on the transitional and minimal ATV television system block diagrams is shown in attachment IS/WP2-0235. This information, along with other proponent responses, will be used as a resource for the comparative system analysis and the professional equipment manufacturers survey. Dave Folsom will analyze proponent responses on a comparative basis and utilize proponent data to identify key equipment that needs to be included in the equipment manufacturers survey.

12. Report to Implementation Subcommittee.

Topics for inclusion in the 8/25/92 report to the Implementation Subcommittee were reviewed by the Working Party.

13. Agenda for Next Meeting.

Agenda topics for the next Working Party meeting were reviewed. The agenda will be mailed prior to the next meeting.

14. Summary of Action Items.

a) Complete software survey and summarize results. Review summary with Craig Tanner, Dave Folsom and Larry Cochran in preparation for presentation at 8/25/92 IS meeting. - Merrill Weiss

b) Review with Field Test Task Force Ed Williams proposal to use adaptive signal coding to reduce peak to average power requirements. - Jim Kutzner

c) Revise draft of comparative analysis of proponent responses. - Merrill Weiss

d) Revise antenna/transmitter survey summary document per 8/20/92 IS/WP2 discussions and present at 8/25/92 IS meeting. - Merrill Weiss

e) Present revision 3 of the summary of proponent responses at 8/25/92 IS meeting. - Merrill Weiss

f) Complete final report draft and distribute to active Working Party members prior to next meeting. - Jim Kutzner

g) Analyze proponent responses to ATV television station block diagrams. - Dave Folsom

h) Determine equipment list for equipment manufacturers survey. - Dave Folsom

i) Discuss early release of ATTC peak to average power measurements for IS/WP2 use with George Vradenburg. - Craig Tanner/Merrill Weiss

15 The next meeting is scheduled as follows:

Tuesday, September 15, 1992
10:00 A.M.
NCTA
First Floor Conference Room
1724 Massachusetts Ave. NW
Washington, DC

16. The meeting was adjourned at 4:45 P.M.

TRANSITION SCENARIOS

WP-2

August 20, 1992

NAME	COMPANY	ADDRESS	PHONE
L. COCHRAN	THOMSON	600 N. SHERMAN DR INDPLS, IND 46201	317-231-4226 317-267-5946
CRAIG TANNER	CableLabs	1050 WALNUT ST, SUITE 500, BOULDER CO 80302	303-939-8500 TEL 303-939-9189 FAX
Ken Skinner	Philips Labs	345 Scarborough Rd., Briarcliff Manor, N.Y. 10510	(914) 945-6088 Tel. (914) 945-6500 FAX
S. Merrill Weiss	Consultant	25 Mulberry Lane - Edison, NJ 08820-2908	(908) 906-0907 Phone & FAX
Dan Frank	FCC	2025 M St NW, Washington DC	(202) 632-6302
DAVE FOLSOM	PROVIDENCE JOURNAL WCNC-TV	1001 WOODRIDGE CTR DRIVE CHARLOTTE NC 28226	FAX (704) 357-4990 (704) 329 3632
Quincy Rodgers	BIC	1899 L St., NW, Wash. DC 20036	202/833-9702 202/466-3291 FAX
William Zou	PBS	1320 Braddock Pl. Alexandria, VA 22314	703-739-5275 -8938 (FAX)

FCC ADVISORY COMMITTEE ON ADVANCED TELEVISION SERVICE
WORKING PARTY ON TRANSITION SCENARIOS
(WP2)

Thursday, August 20, 1992
10:00 A.M.
PBS
Media Room, Fifth Floor
1322 Braddock Place
Alexandria, VA

AGENDA

1. Adoption of Agenda.
2. Approval of 7/22/92 Minutes.
3. Review of Action Items.
4. Software Survey.
5. Local Area Group Update.
6. Final Report Preparation.
7. Review of Proponent Responses.
8. Professional Equipment Survey.
9. New Business.
10. Conclusions and Action Items.
11. Next Meeting.

FCC Advisory Committee on Advanced Television Service
Implementation Subcommittee Working Party 2 on Transition Scenarios

Report on Survey of Transmitter & Antenna Manufacturers

Some concern has been expressed by certain parties that the move to HDTV operation by broadcasters may be impeded by a lack of sufficient capacity for the manufacture of transmitters and antennas. In particular, question has been raised about the ability of manufacturers to supply the required numbers of transmitters and antennas within the total of five years the FCC has proposed to give to broadcasters in which to apply for and build facilities while retaining their preferential assignment of channels for ATV operation.

Because any serious shortfall of capacity would have significant implications for the implementation of ATV, IS/WP-2 has undertaken a survey of transmitter and antenna manufacturers to learn of their individual production capacities and thereby to guage the capacity of the industry. The results of the survey are reported herein. In the process of conducting the survey, a number of additional, related areas came to light, and they are reported also.

The outcome of the survey is that, with appropriate planning on the part of broadcasters and the placement of orders early enough during the application/construction window, there is sufficient capacity within the transmitter/antenna manufacturing industry to meet the need. There may, however, be limitations on the numbers of towers that can be built and antennas that can be installed that will impede the installation of ATV. These results are discussed in detail in this document.

The Survey

The survey was conducted during the months of July and August, 1992, through a series of telephone interviews with the managers of companies that build transmitters and antennas for broadcasting applications. Since there is a small number of companies in each of these categories, the total number of telephone contacts was also small. Six of six major transmitter manufacturers were interviewed; six of eight major antenna manufacturers were interviewed.

The survey was conducted by a single member of IS/WP-2 knowledgeable in the area of broadcast plants as well as in Advanced Television. The conversations with each manufacturer lasted from half an hour to an hour. Explored during the discussions were the numbers of units that are now produced by each company, the extent to which each could increase its production capacity in a reasonable manner, the relationship between power levels and production capacity, the technology expected to be used, tradeoffs in the technology, and any capacity limitations in related areas that might impact ATV implementation.

Transmitters

The capacity of the industry to build transmitters depends upon the power level involved. At the 30 kW level, current (NTSC) production capacity is approximately 250 transmitters per year. At higher power levels, the number reduces to about 175. At the 10 kW level, it increases to almost 300 transmitters per year. Actual sales are considerably lower than these numbers.

When considering the move to ATV, a number of assumptions are made by the manufacturers. First, it is assumed that the technology required in transmitters is comparable to that needed for NTSC. There will be no aural transmitters and no notch diplexers for combining the visual and aural transmitter outputs. The frequency response, group delay, and linearity characteristics required will be similar to those achieved currently. Second, it is assumed that the transmitter power levels required for ATV will be in the region of 30 kW. Many installations will require lower power, and few will require higher power. Third, it is assumed that the vast majority of transmitters required will be UHF.

Additional factors involved in the planning by the transmitter manufacturers derive from their assessments of the marketplace and the needs of their customers, the broadcasters. There is some expectation that not all broadcasters will choose to implement ATV, with certain estimates running as high as half of stations deciding not to proceed with ATV. There is also an expectation that most stations will build single-ended, as opposed to redundant, transmitter plants during the initial phases of implementation, thereby keeping the number of transmitters required at or below the current number of stations.

If no efforts were made to increase capacity, the industry could deliver ATV transmitters at the rate the current capacity can support, i.e. 175-300 transmitters per year depending upon power levels. But manufacturers reported planning increased capacity for the period when high volume production will be needed. To some extent, such planning calls for the construction of additional facilities. To a much greater extent, it involves the addition of a second shift for the period of heavy production. No shortage of the skilled personnel needed to implement either approach was foreseen.

With the increases planned, industry capacity to build transmitters rises to approximately 550 per year on a sustainable basis at the 30 kW level. It is possible to surge past this to a level of about 750 per year, but this was considered by the manufacturers as practical only for a fairly short time. At the 10 kW level, the sustainable capacity is on the order of 700 transmitters per year. The aggregate capacity divides over the various power levels; the capacities for 10 and 30 kW cannot be added. At power levels in the region from 1-5 kW, additional capacity does become available that can be added to the quantities producible at the higher power levels.

None of the manufacturers foresaw any shortage of components for the construction of transmitters. Items specifically explored included the tubes and semiconductors for the radio frequency amplifiers in transmitters and the high power components used in power supplies. There is currently some question whether solid state devices will be available in time to support high power at UHF. Once developed technologically, semiconductors are available in larger quantities and from multiple sources, so that their supply is assured. The favored tubes for high power UHF are currently available from only one source, but two other companies are expected

to have versions in time to meet the demand. All other components are available from multiple sources, and manufacturers maintain relationships to assure the meeting of their needs.

An important consideration in turning the gross production capacity of the industry into transmitters delivered during the required interval is the early planning and placing of orders by broadcasters. Some of the manufacturers expected lead times for transmitters to extend to two years from the current four months. This means that the last of the transmitters to be installed within the five year window must be ordered about nine months into the three-year construction period, allowing on the order of three months for installation.

It was very clear from manufacturers' comments that the potential capacity can only develop and production requirements be met if they are given enough advance warning of the need. That warning will only be in the form of orders from broadcasters. In turn, it will allow them to obtain the components they need in a timely and economical manner, and it will permit them to be prepared with the facilities, equipment, and staffing necessary to build the volume of transmitters projected to be required.

Antennas

Just as with transmitters, the capacity of the industry to build antennas depends upon the power levels involved. In this case, it is the transmitter power level that is determining of manufacturing capacity, with 30 kW into the antenna once again appearing to be a break point. The current capacity of the industry to manufacture antennas is almost 250 per year at power levels of 30 kW and up. Below that level, capacity jumps to over 350 per year. Actual sales are currently well below capacity.

Various factors are cited by the manufacturers in estimating their production capacities. Consideration must be given to whether antennas are top mount, side mount, or wrap-around. It is generally agreed that wrap-around, or panel, antennas are easier to manufacture than top or side mount versions. Conversely, installation of panel antennas takes about twice as long as for top or side mount units. There is a large international capacity for manufacture of panel antennas that is only partially represented in the capacity numbers quoted in the preceding paragraph. That international capacity could quickly and easily be brought to bear on the needs of U.S. broadcasters.

The number of antennas required will be affected by the number of locations where broadcasters work together to build common facilities and use common antennas. Panel antennas in particular are useful across a broad part of the UHF spectrum. Their use will allow multiple stations to share antennas. The number of stations possible per such antenna will be determined as much or more by the transmission line design and any required power combiners and splitters as by the antenna itself. Some manufacturers expect broadcasters to start out with individual antennas on their own towers at lower than permitted power levels, then to switch to common facilities and shared antennas later while increasing power to the maximum authorized.

There is disagreement among the manufacturers regarding the impact of the relationship between peak and average power. Some feel that the transmission lines and power combiners and splitters will be limited only by the heating effects of the average power levels. They believe that the

peaks will be of such short durations and the relative peak voltage capacity of the components so great that peak power will not be a design factor. Others believe that peak power will have a significant impact on voltage breakdown requirements, pointing out that voltage breakdown leads to an avalanche effect that can destroy equipment. Of considerable importance is the derating required in multiple station installations to account for the possibility that all stations might on occasion reach their peak powers simultaneously, thereby creating much higher voltages than normally appear in the system.

Yet another area requiring attention is the choice of coaxial or waveguide transmission lines. The impacts of this selection are on wind loading, power handling capacity *vs.* frequency, transmission line bandwidth, and transmission line losses. These issues become of increasing significance in multi-station installations.

An assumption made by all the antenna manufacturers is that far field antenna range testing will not be required for the antennas under consideration. Instead the antennas will be tested in the field after installation. Antenna range testing of all antennas would reduce capacity dramatically. The rationale for the assumption by the manufacturers is that they all use sophisticated computer models to design their products, and the agreement between the results in the field and the computer predictions of performance is now very good.

For production of antennas for the transition to ATV, manufacturers can increase their capacities, some by a factor of two. This results in a domestic industry-wide capability of about 475 antennas per year at the 30 kW power level and above. Below 30 kW, capacity can be increased to around 600 units per year. These levels can be supplemented with imported antennas, from other manufacturers, as needed by the broadcast industry.

Other Considerations

A number of antenna manufacturers, in particular, were concerned about the ability to install the numbers of antennas that will be required. There are a number of factors that contribute to their concerns. These have to do with two principal areas: the number of crews available for such installations and the limitations imposed by weather and the seasons on the time during which installations can be accomplished.

There are three companies that manufacture towers for broadcast use (1,000 feet and up). There are about a half dozen companies that can erect such towers up to about the 1,500 foot point. Beyond 1,500 feet, there are three (of the six) companies capable of the task. The same companies that erect towers are needed to make any structural changes such as reinforcements that are required. There are about twenty companies that can handle change-outs and new installations of antennas and transmission lines only, without involving structural work on the tower. Some of these companies have multiple crews.

One crew can put up a 1,000 foot tower in about three weeks. 2,000 feet take nearly double that time. With travel, preparation, and overhead time, a crew can actually erect one 1,000 foot tower about every six weeks or a 2,000 foot tower about every nine weeks. Installation of antennas takes additional time. To install a top mount antenna with its transmission line takes about one

week; a wrap-around panel antenna takes about two weeks for a crew to install. Crew sizes assumed include eight personnel.

It takes nearly as long to reinforce a tower as to build one, and the same riggers that build them are required to do the work. Thus in calculating the industry capacity to erect towers, the number to be reinforced must be figured into the equation. It must also be noted that the crews and companies discussed here construct and install a much broader range of facilities than just broadcast towers and antennas. Thus they are only available for television broadcast activities for some proportion of their time, the remainder being devoted to microwave, cellular telephone, radio broadcast, and similar operations. The same limited number of crews must service all of these needs. It is not possible to rapidly expand the number of domestic tower/antenna crews because of the years of experience required to assure the safety of both the installers and those on the ground together with the reliability of the installation. There may be some possibility to enhance the number of crews through the use of foreign groups.

Another factor that enters into the productivity that can be expected in tower/antenna installations is the weather. In some areas of the country, there is cold and snow during lengthy parts of the year. In other places, heavy rains can stop work for large proportions of the time. These situations must be taken into account when figuring the number of installations that can be accomplished during the construction period.

For purposes of understanding the influence of all of these factors on the numbers of antennas that can be installed during the three year window, a number of assumptions will be made. Based on these assumptions, the capacity to install towers and antennas can be calculated. The assumptions are based upon a reasonable proportioning of the factors involved, given knowledge of the balancing elements of those factors. The reader is encouraged to apply other proportions in carrying out a similar analysis. The three year construction window will be used based upon the assumption that not many stations will be ready and able to begin construction during the two year application period that precedes it.

Other assumptions are that the construction crews will devote one-half their time to television broadcast ATV installations, that the weather will preclude activity for twenty per cent of the time, and that twenty-five per cent of stations will require new towers or reinforcement of their current towers. (All of these assumptions have been selected at the end of estimated ranges that lead to higher estimates of production capacity.) Also assumed will be that sixty per cent of towers are 1,000 feet tall, thirty per cent are 1,500 feet tall, and ten per cent are 2,000 feet tall; half of towers requiring structural work will be assumed to require new construction and half reinforcement (equal times). An estimate of twenty-five crews for antenna installations only, ten crews for towers up to 1,500 feet, and five crews for towers to 2,000 feet will be used. Antennas will be assumed to be half top or side mount and half wrap-around panels.

The number of television stations will be taken as 1600. This derives from the 1500 currently on the air and half of the almost 200 construction permits currently issued (Broadcasting magazine, August 24, 1992, pg. 49). Some of the stations will be newly on the air. Some will have newly constructed towers. Of the new towers, some are likely to be designed just to carry the current loads in order to minimize costs. Others probably will have been designed with future expansion in mind. In order to account for some proportion of new towers with expansion

capacity, the number of stations to be used in calculations later in this report will be 1500. Not included in this reduction is the currently unknown factor resulting from stations sharing a common tower. Since, in any event, arrangements for ATV operations may not be the same as for current NTSC operations, it cannot be assumed that the same (nor a larger or smaller) number of stations will share towers for ATV use.

Using all the preceding assumptions, in a year, twelve towers up to 2,000 feet can be built or reinforced, thirty-five additional towers up to 1,000 feet can be built or reinforced, and 347 antennas can be installed. Installation of the antennas is assumed to be accomplished with different crews than build or reinforce the towers in order to maintain maximum capacity for tower construction. The number of antennas installed in a year can probably be increased by shifting the percentage of time the crews devote to television broadcast *vs.* other clients. If this number can be moved up to 500 per year and installations can be uniformly spread over the three-year period, the need can be met. It should be noted that provision is made in this analysis only for the installation of new antennas; any rearrangement of existing equipment will necessarily reduce the number of antennas that can be installed by increasing the work and time required.

Not so easy of solution is the shortfall in tower installation and reinforcement crews. Even if they were to devote full time to television broadcast installations, there is capacity for building or reinforcing only twenty-four towers up to 2,000 feet and seventy towers up to 1,000 feet each year. Since estimates are that twenty-five to fifty per cent of stations will require either a new tower or tower reinforcement to accommodate ATV, there is a significant shortfall in capacity. In the three year construction window, a total of about 300 towers can be built or reinforced if the crews devote full time to broadcast television and the work is spread uniformly, while between 375 and 750 likely will require work of this sort.

In this report, every effort has been made to be conservative in analyzing potential shortfalls in capacity. Thus all of the factors have been chosen at the ends of their ranges that produce the greatest output. It is questionable whether this favorable result can be achieved in practice, given the propensity for projects of this sort always to take longer than planned. Nonetheless, even if the calculations of construction/reinforcement capability herein are off by a factor of two, some stations may not be able to get their tower and antenna work done within the three year window. IS/WP-2 believes that the Commission can expect to receive requests for extensions of time to construct that will result in these instances.

In summary, it should be noted that, under the assumptions made that broadcasters place their orders in a timely manner, the capacity to supply transmitters and antennas is significantly greater than the capacity for installation of towers and antennas. Readers of this report are encouraged to conduct their own independent evaluation of the assumptions made. Changes in only a few of these assumptions could have a major impact on the conclusions reached herein.

FCC Advisory Committee on Advanced Television Service
Implementation Subcommittee Working Party 2 on Transition Scenarios

Report on Survey Regarding Software Availability

One important ingredient in the transition to Advanced Television will be the availability of suitable programming in sufficient quantity to attract audiences to first buy the ATV receivers and to then watch the programs. The critical nature of this element of the transition led to a request from the Implementation Subcommittee to IS/WP-2 that it study the likelihood that major players in the program production and distribution businesses will provide programming appropriate for ATV early in the transition period. This report is the outcome of that study.

The inquiry into the likelihood of ATV participation by major players in program production and distribution took the form of a small survey of executives of some of the larger participants in the pertinent industry segments. It was decided to conduct a small survey first, with the expectation that there would be enough consistency in the responses that a much larger and time consuming survey could be avoided. If sufficient consistency were not found, then the wider survey could be undertaken.

The result of the small survey had sufficient consistency that the broader survey was not implemented. There was general agreement among those contacted that programming will be available in quantity from a wide range of sources. There was also good agreement on what the early forms of programming in ATV will be and how they will be provided. Also explored and reported herein are such related matters as the order in which various program types possibly will become available, the media and production format types likely to be used for production of different types of programs, and the quality levels and attributes necessary for ATV production.

The Survey

The survey was conducted during the months of July and August, 1992. It comprised a series of telephone interviews with the managers of major players in the program production, post production, and distribution businesses who are most concerned with the implementation of Advanced Television for their companies. Included in the contacts were managers at four broadcast television networks (three commercial, one public), a major subscription cable network, three Hollywood studios, one television production company, and one television post production company.

The survey was conducted by a single member of IS/WP-2 knowledgeable in the areas of both television program production and Advanced Television. The conversations with each industry participant lasted from half an hour to an hour. Explored during the discussions were the planning done for ATV programming, the timing of provision of the first ATV programming, the expected order of availability of programming by types, the sources of material to be produced and distributed, the expectations for installation of equipment, the minimum

characteristics required for ATV programming, and expectations for technical capability in program production and distribution.

Programming Expectations

The first area explored was the state of planning for participation in Advanced Television by the organizations represented by those interviewed. All of the organizations had considered whether and how they will provide ATV programming to their viewers and/or clients. This was a qualifying issue for continuation of the interviews, and all interviews proceded from this point. This was also the only point on which there was universal agreement.

Participants were asked how long following an FCC decision on an ATV system they expected initially to provide such programming. Responses fell into two broad categories: those with explicit time periods and those for whom market factors were the drivers. In general, respondents from the broadcast networks and some of the studios gave explicit answers, with the time periods ranging roughly from one to two years. In one network case, this was qualified with a requirement that standards must be completed and equipment must be available to the defined standards. In one studio case, the explicit time period given was conditioned on there being a film scanner and other necessary equipment available in a post production house.

Respondents from the remaining studios, the cable network, and the post production community were less specific in their time assessments. They felt that their provision of ATV programming would depend heavily on market demand for their product. Some also tied this to the availability of both consumer and commercial hardware for the new system. The participant from the cable network made it clear that the timing for his company was unrelated to the FCC decision, per se, but was dependent on the availability of receivers to consumers. The respondent from the television production company pointed out that it will be sensitive not only to demand in the U.S. but also to demand for its product in Europe.

Next examined was the extent to which organizations were communicating with their suppliers or their clients and the expectations they had of them. The network participants were asked if they had spoken with their suppliers about providing material and whether they expected those suppliers to do so in the time frame during which they expected to initially provide programming to their viewers. The studio and production/post production participants were asked if they had spoken to their clients and whether they expected those clients to create a demand for material in the time frame.

In general, some of the broadcast networks and the post production company have spoken to their suppliers and clients, respectively; the other organizations have not had such conversations except very informally. Yet there was a universal expectation by the producers that the demand for programming will exist and by the networks that the material will be supplied to them when they need it.

Regarding the order in which programming will become available, there was general agreement that early material will be derived from film production and will fall into two categories: prime

time episodics and movies. This derives from the fact that material shot on film can be converted to HDTV form by scanning in a telecine. Thus all theatrical motion pictures can be made available relatively quickly. Since approximately eighty per cent of prime time material is shot on film, it, too, can be made available relatively quickly. Which of these two forms is seen as becoming available first depends upon the respondent's point of view – the networks tend to expect prime time programming first while the studios expect movies first.

Asked about who will be producing the material, the participants from the studios and the television production company expected to be producing it themselves; the post production company expected only to handle material produced by others – both as would be expected. The networks anticipated a mixture: obtaining some from producers and producing some material themselves.

The participants were asked to order the eventual inclusion of other types of material in the programming available to the public, whether they were involved with it themselves or not. They generally ranked sports as most apt to follow programming based on film production. It is seen as the type of programming most likely to benefit from a combination of the value of live pickup and the attractiveness to audiences of Advanced Television. Beyond sports, there was a general scattering of opinions on what other types of programming would come in what order. There was agreement among the commercial broadcast networks, however, that news will be last.

It should be noted that, throughout this examination, the perspective of the participant from public television was somewhat different from the other respondents. His view was that the first material to be distributed will be produced in video, as opposed to film, and will be material being produced now that is timeless in nature. Material will be produced both by his organization and by others, largely through co-productions, as has been the case so far. Beyond the initial ATV program material, a substantial amount of upconverted 525-line material, in component form, some of it possibly widescreen, is anticipated. The amount and exact form of this material will depend on co-production arrangements for ATV/HDTV.

Production Technology

There has been considerable interest in the necessary or appropriate levels of technology for the production of programming for use in the ATV domain. The possibilities range from full High Definition Television technology to intermediate levels of widescreen 525-line production to upconversion of standard 525-line and NTSC material. To explore the expectations of the respondents with regard to the level of production technology to be used, a series of questions was asked, some open ended and some with multiple choice answers. There was wide variability in the answers to these questions, but some strong tendencies do appear.

Material produced in film format will generally be transferred to full HDTV format for distribution in Advanced Television according to respondents from the production community. An interesting sidelight to this is that rather than transferring to HDTV and downconverting for NTSC use, a number of the producers intend to make a second transfer for NTSC (or PAL) use.

This includes the bulk of material shown during prime time and presumes a separate path to network affiliates or local cable headends rather than downconversion locally.

General agreement also existed that sports for ATV transmission will be produced in full HDTV. HDTV mobile units will have to be built to accomplish this. There was also a tendency among participants to expect economics, in various flavors, to influence the choice of technology for other types of programming. Among the considerations seen as determining are the size audience expected for a given program, the archival value of the program, the potential for international distribution, and the immediacy of the program's content.

One studio respondent indicated that his organization was contemplating shooting network and first run syndication of non-reality based programming on film, protecting 16:9, transferring to 525-line components, post producing in 525 lines, and upconverting to HDTV at the end of the process. They will not conform the film after editing because there is no budget to do so. It will also be very expensive to conform a new HDTV transfer later, although the film will be saved in case this becomes desirable. Digital component 525, when upconverted, is expected by this organization to be good enough for ATV transmission, given the economics of full HDTV production or post production.

Participants were asked when they expected their organizations to begin installing equipment for some level of HDTV operation. Answers from the broadcast network respondents divided between 0-1 and 1-2 years. The cable network, which has some equipment already, has a plan calling for backtiming from the availability of receivers to consumers and beginning to equip itself 1-2 years before that time. Virtually all of the other participants, all of whom are in the production and post production aspects of the business, indicated they will begin to add HDTV when their clients begin to demand it, when the audience begins to grow, and when the equipment becomes economical. In the words of one, "When we have to." A couple of the studios indicated that all of their video work is done by others, so they may never add HDTV equipment themselves. If they do, it likely will only be for monitoring, not production.

There has been considerable discussion within the industry concerning the possible use of lower performance levels of production than full HDTV for use in ATV transmissions. As part of its survey, IS/WP-2 was requested by FCC staff to explore this concept and to try to shed some light on what should constitute ATV material. Among the issues in this discussion have been such matters as the aspect ratio, the use of component *vs*. composite processing, the provision of multiple audio channels, and the required resolution.

Respondents were asked whether they agreed with the concept that something less than full HDTV performance will be adequate for production and distribution of programming for Advanced Television, at least for some users as an interim step. There was unanimous agreement with the concept, although not all felt it would necessarily fit their respective businesses.

Respondents were then asked what minimum characteristics they believed will be appropriate for production for Advanced Television to adequately differentiate it from currently produced

NTSC material. Answers to this varied widely. But there was a strong concensus on certain characteristics, namely 16 X 9 aspect ratio, component operation, multi-channel (some said digital) audio, and improved resolution, in the order of their frequency of inclusion. Improved resolution was deemed unnecessary by some.

Two responses were targeted at appropriate FCC Rules for programming to be carried on the ATV channel during the period that the FCC has proposed to permit stations to carry separate programming on their ATV and NTSC channels for purposes of developing ATV programming techniques. One suggested that since, in his opinion, simulcasting will essentially consist of upconverted NTSC material, then as a minimum, full HDTV (only as necessary to support the maximum capabilities of the transmission system) should be used as the source for any separate programming. The other suggested that material to be carried separately should be sufficiently different from NTSC that it would be shot differently and would therefore be difficult to downconvert to NTSC. Put another way, this approach would require material that would suffer if it were put through the constraints of NTSC and that would be competitively disadvantaged as a consequence.

Asked whether their companies would utilize video technology at a lower performance level than HDTV for production and/or distribution for Advanced Television, five said yes, three said no, and two said they did not know.

In summary, then, it can be said that there is good concensus among the program producers and network executives interviewed for this study that there will be adequate programming available for the launch of Advanced Television in the United States. The sample is small, but the degree of agreement leads to a conclusion that a wider survey, while it might expose a greater variety of opinions, especially with regard to specifics, will not lead to a substantially different outcome. For this reason, IS/WP-2 has chosen not to pursue the broader study but instead to issue this report.

IS/WP2-0230
20 AUG 92

MEMORANDUM

To: S. Merrill Weiss
Craig Tanner
Dave Folsom

From: Jules Cohen

Subject: HDTV Broadband Antenna Performance

The accompanying letter from LDL Communications and data from Alan Dick was provided to me in my role as Chairman of the Field Testing Task Force. The suggestion was made that you three would be interested also.

July 27, 1992

LDL COMMUNICATIONS, INC.
14440 CHERRY LANE COURT, SUITE 201, LAUREL, MD 20707
TELEPHONE (301) 498-2200 • FAX# (301) 498-7952

LeBLANC

July 8, 1992

Jules Cohen, P.E.
Chairman, Field Task Force
Suite 600
1725 DeSales Street, N.W.
Washington, D.C. 20036-4406

SUBJECT: HDTV BROADBAND ANTENNA PERFORMANCE

Dear Mr. Cohen:

In response to your concern expressed in the last meeting about the viability of broadband, multichannel antenna systems, Alan Dick & Company has provided the attached antenna pattern and combiner data. The data consists of measured horizontal radiation patterns and calculated vertical patterns for three UHF channels spaced across the band, and combiner transmission performance data at two closely spaced channels and third widely spaced channel.

The UHF Broadband panels were configured to provide wide band horizontal pattern performance on a standard 640 mm square mast. Measurements were performed at channels 18, 40, and 60 in steps of 2 MHz, but only the channel edge results were plotted as they indicate the greatest deviation. Amplitude deviations of less than 0.2 dB on any azimuth over each of the three channels was demonstrated. Measurements and calculations indicate that the group delay deviations were no more than 1 ns over each 6 MHz channel.

Vertical pattern performance was calculated on the basis of 12 bays of UHF Broadband panels. The gain for this arrangement varies from 13 dB (20 x power) at channel 18 to 14.5 dB (28 x power) at channel 60. Calculated main beam variations, including increasing gain effect, were less than 0.1 dB. The worst case variation in the first 11 degrees of depression angle was about 0.5 dB at 11 degrees on the channel 40 vertical pattern. Calculated group delay variations were less than 1 ns at depression angles down to 11 degrees.

The combiner transmission performance was derived from measured data taken on systems provided in Australia. To demonstrate close spaced performance, data for channels 40 and 43 is presented. Channel 53 data provides a wide spaced example. Transmission loss variation was less than ± 0.05 dB and group delay variation was within ± 3 ns for all three cases. Alan Dick engineers believe a spacing of two channels is possible with a special design and some loss of performance.

It should be pointed out that these broadband panel systems can be configured in many ways. Although the presented configuration demonstrates wide band performance, Alan Dick does not suggest that a single system design for use by any channel is the optimum or desirable approach in every situation. Each system should be engineered for the channels considered. Improved circularity performance is possible by limiting the bandwidth of operation. When a large number of channels must be co-located at a given site, a better solution may be to segment a vertical stack of broadband panels into frequency ranges to provide the best possible electrical performance as well as handle the peak voltage requirements.

Best Regards,

Ernest H. Mayberry

Ernest H. Mayberry
Systems Engineer

HORIZONTAL RADIATION PATTERN

STATION ..... HDTV .....

Channel ... USA 18 .. Frequency ... 494/500 MHz.

Type ..... UHF BROADBAND PANEL ARRAY .....

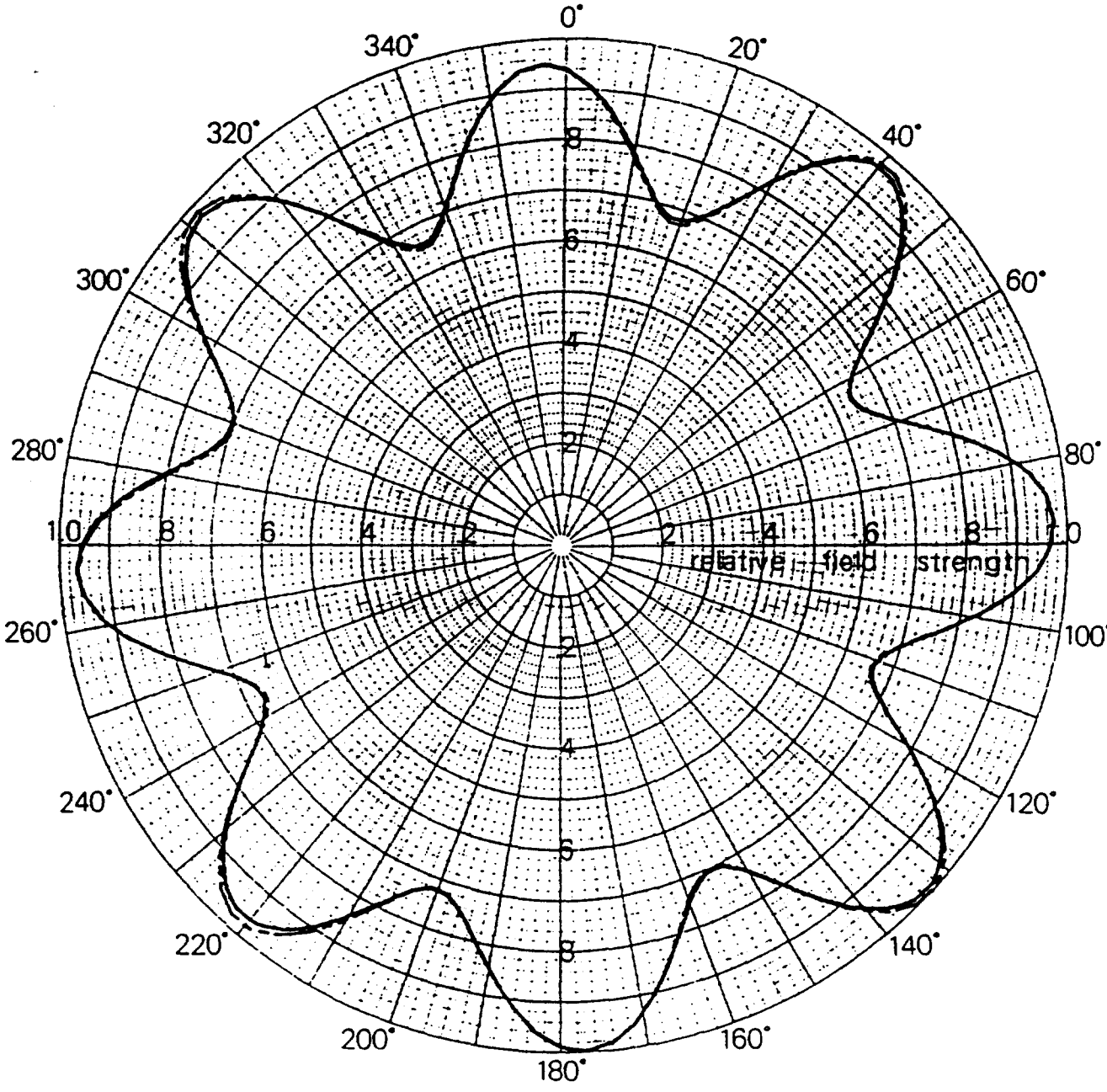

——— 494 MHz

— - - — 500 MHz

H.R.P. Gain ..... power ratio; ..... dB.

Engineer ..... SD ..... Date ... June 1992 .....

ADC
Alan Dick & Co Ltd
CHELTENHAM ENGLAND

HORIZONTAL RADIATION PATTERN

STATION HDTV

Channel USA 40 Frequency 626/632 MHz.

Type UHF BROADBAND PANEL ARRAY

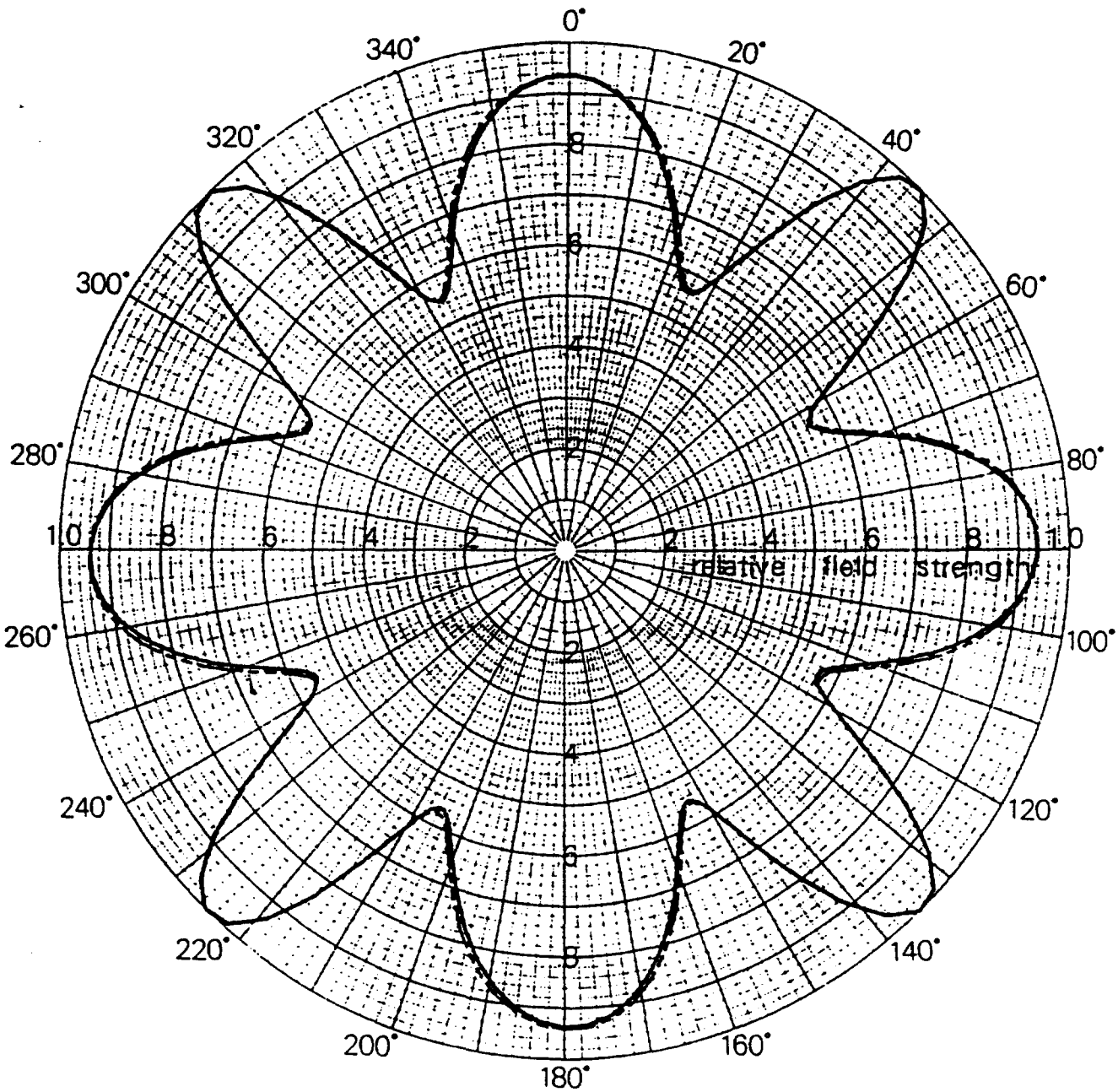

626 MHz

632 MHz

H.R.P. Gain ..... power ratio; ..... dB.

Engineer SD Date June 1992

ADC
Alan Dick & Co Ltd
CHELTENHAM ENGLAND

HORIZONTAL RADIATION PATTERN

STATION ..... HDTV .....

Channel ... USA 60 .. Frequency ... 746/752 MHz.

Type ..... UHF BROADBAND PANEL ARRAY .....

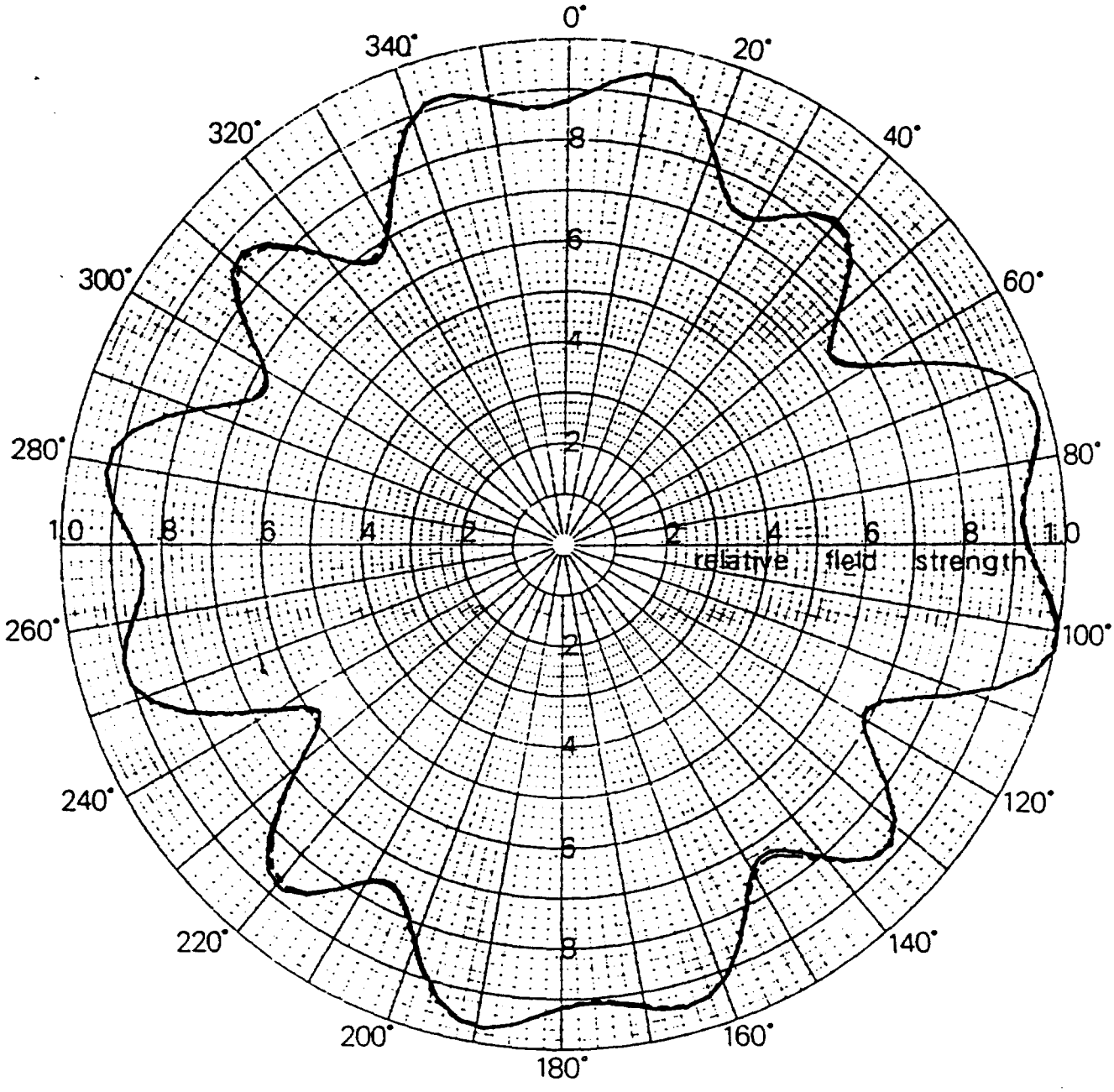

——— 746 MHz

— - - — 752 MHz

H.R.P. Gain ..... power ratio; ..... dB.

Engineer ..... SD ..... Date .... June 1992 .....

ADC
Alan Dick & Co Ltd
CHELTENHAM ENGLAND

VERTICAL RADIATION PATTERN

STATION	HDTV	Beam Tilt	0.4 Deg.
Channel	USA 18	Null Fill Loss	1.0 dB.
Frequency	494/500 MHz.	Face	
Type	UHF BROADBAND PANEL ARRAY	Engineer	SD
Aperture	12 TIERS	Date	June 1992

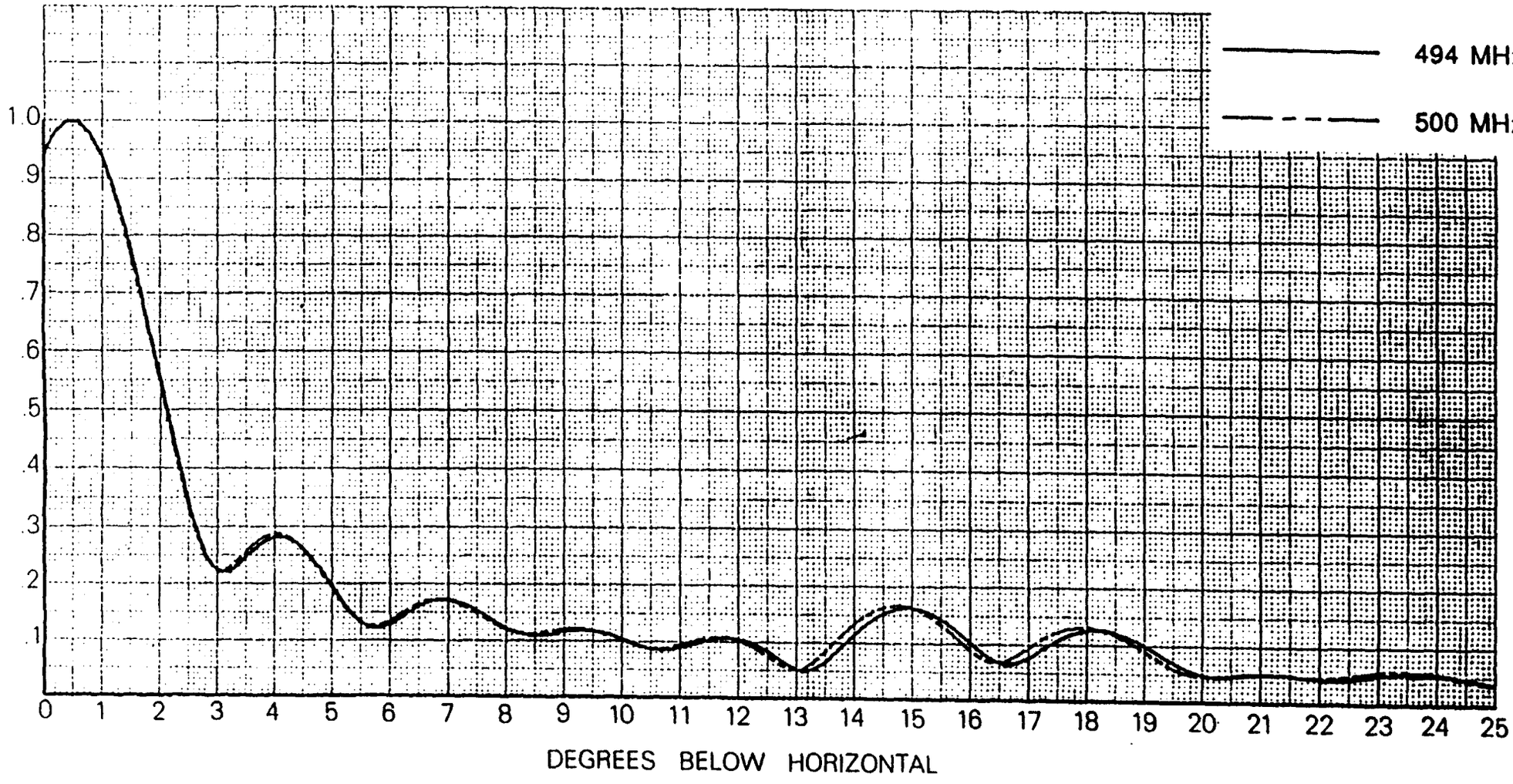

VERTICAL RADIATION PATTERN
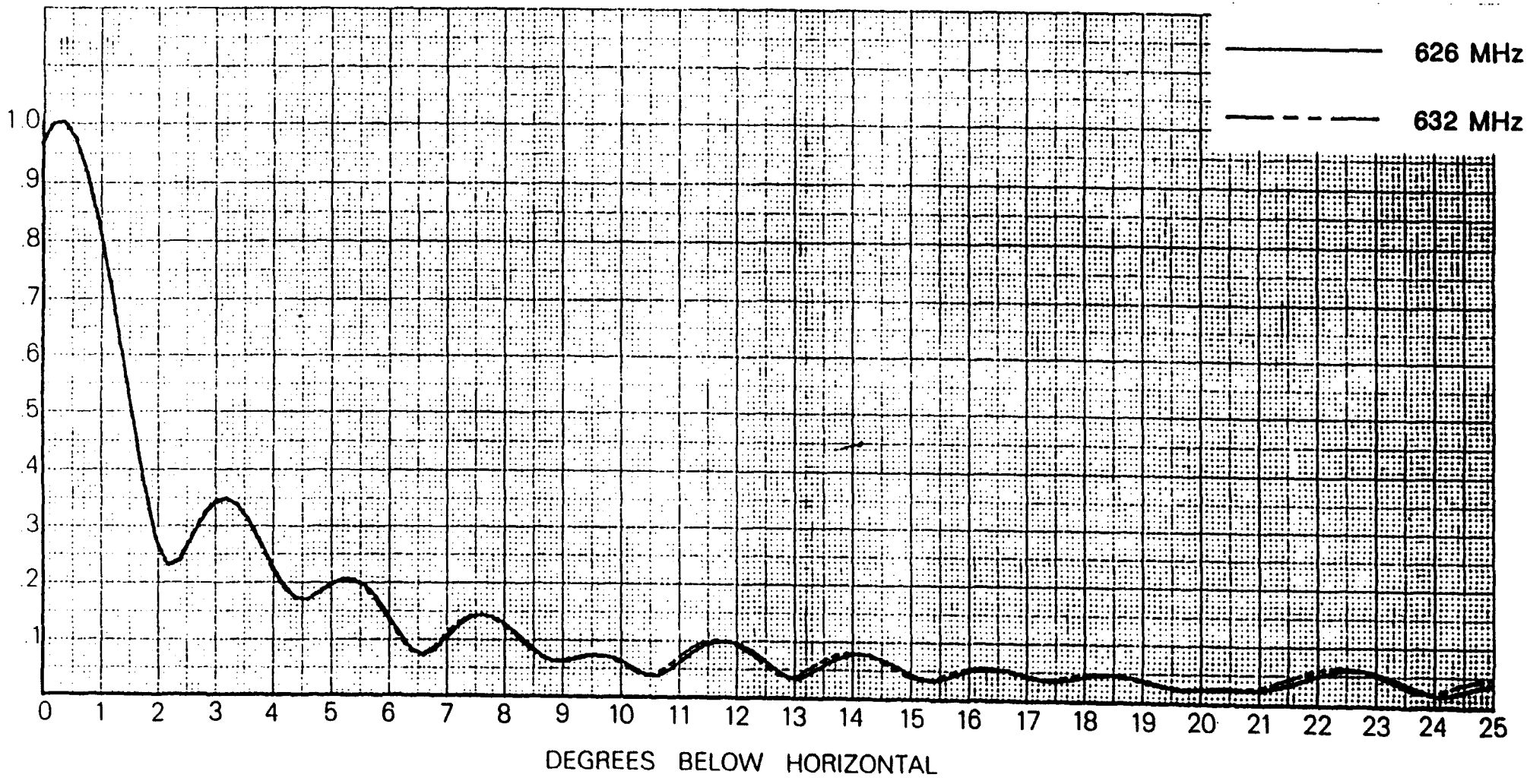
STATION	HDTV	Beam Tilt	0.4 Deg.
Channel	USA 40	Null Fill Loss	0.9 dB.
Frequency	626/632 MHz.	Face	
Type	UHF BROADBAND PANEL ARRAY	Engineer	SD
Aperture	12 TIERS	Date	June 1992