Multiple Windows and Programs

- **Multiple media streams/program and multiple program multiplex capability is inherent via the GA/MPEG-2 transport header/descriptors**

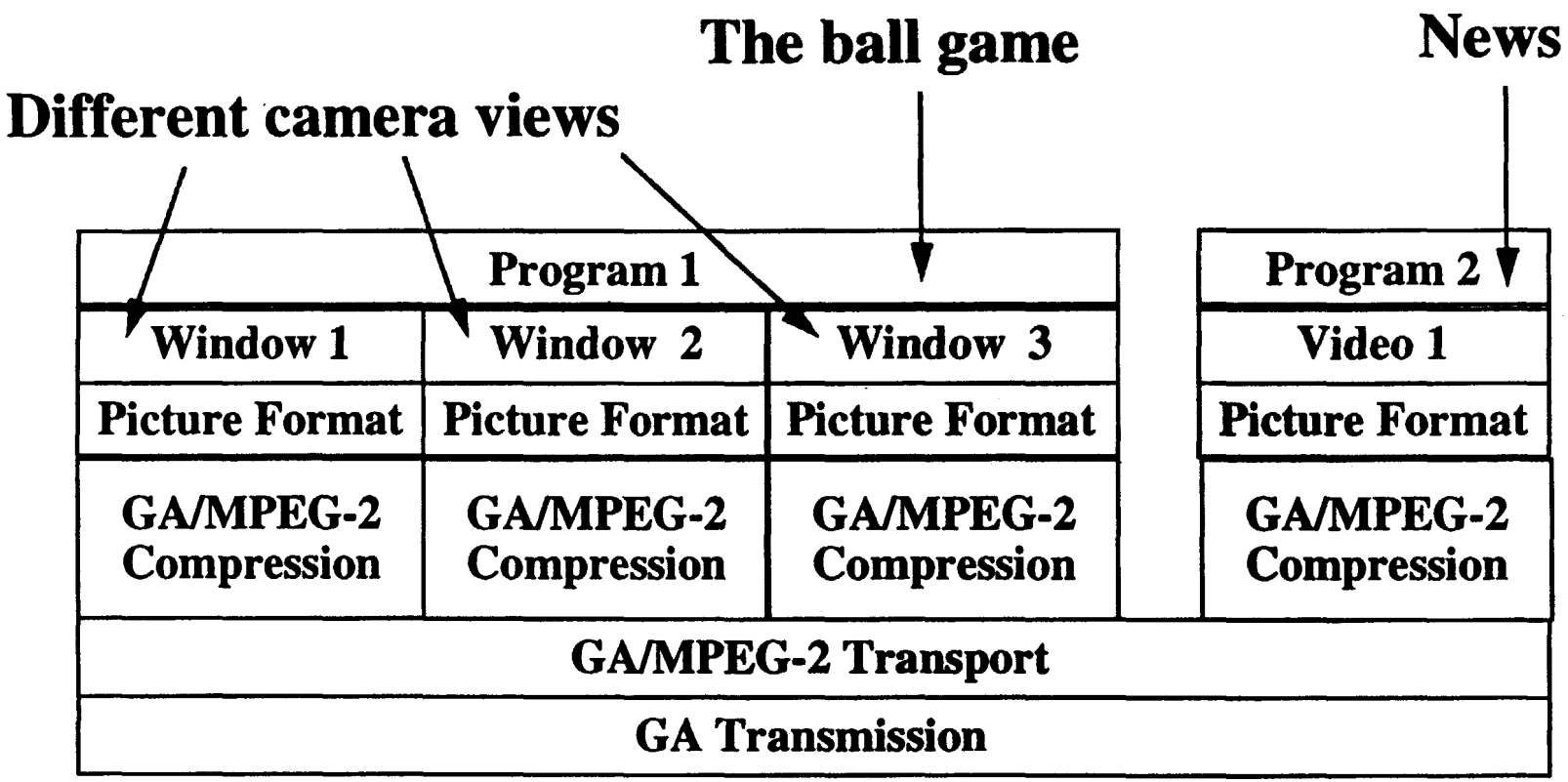

System Level Multiplex

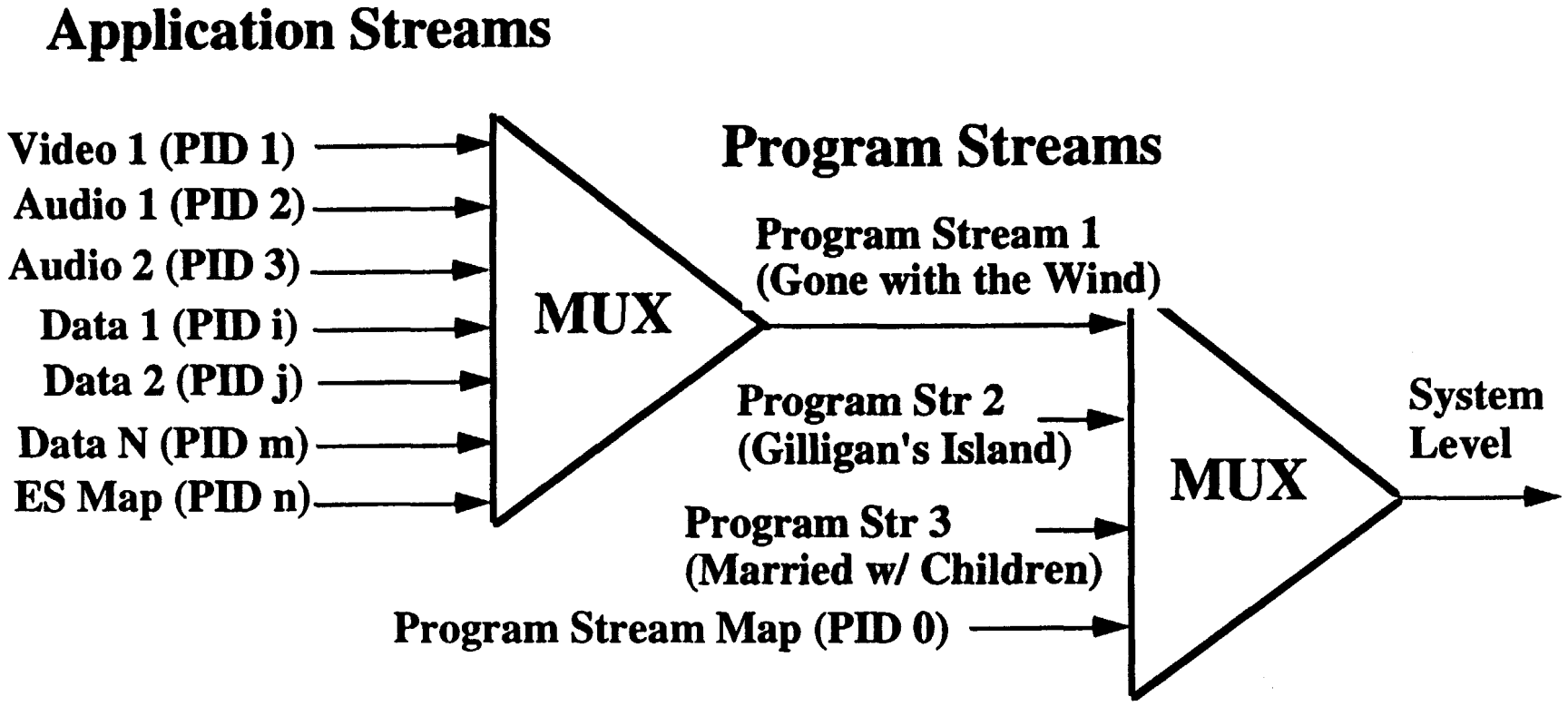

PID0 (program_association_table) =>
PID (program_map_table) =>
PIDs of elementary bitstreams

A Multiple Program H/D Example

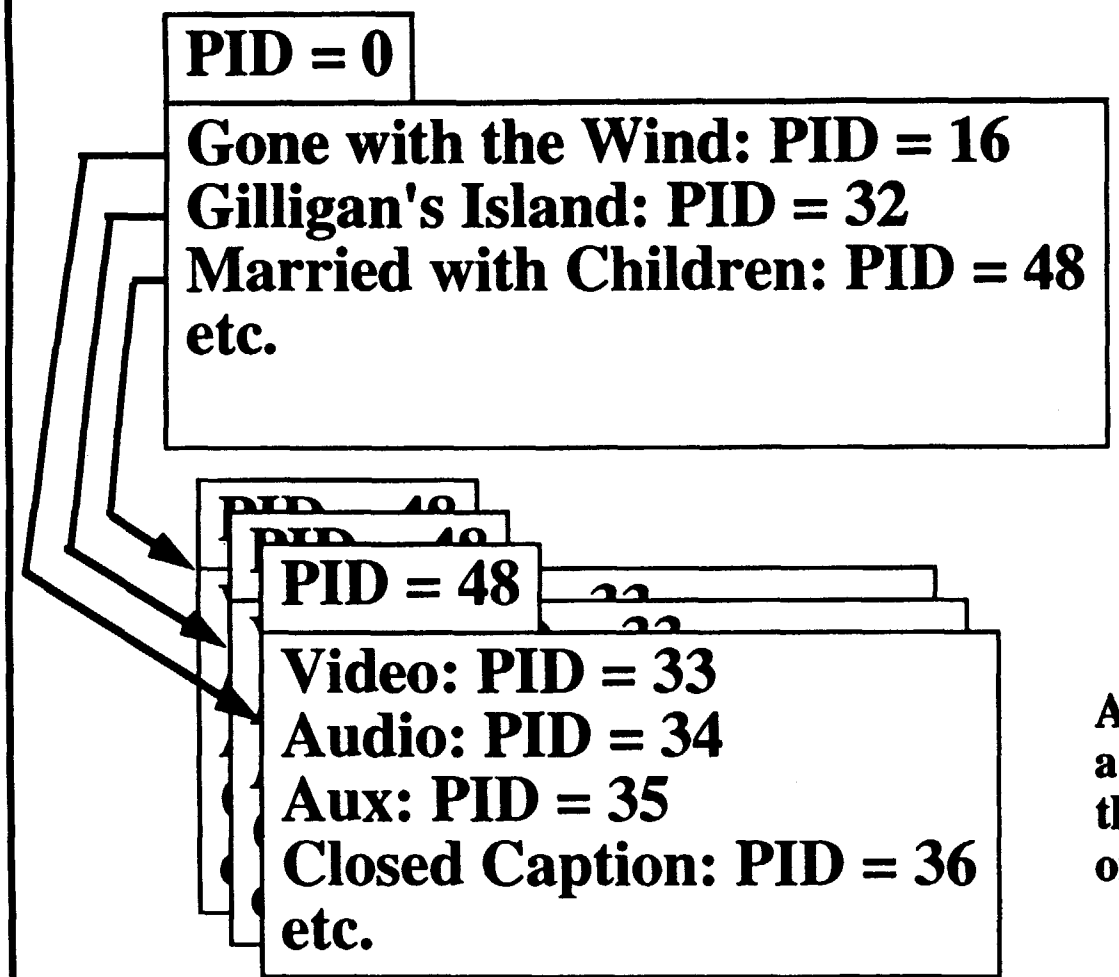

Packet Stream 0 contains the *Program Association Table* that associates programs with Control Stream ID's

A Control Stream contains a *Program Map Table* that lists Elementary Stream ID's of each Program component

ATM Interoperability - Encapsulation

...the encapsulation approach under development in the ATM Forum...

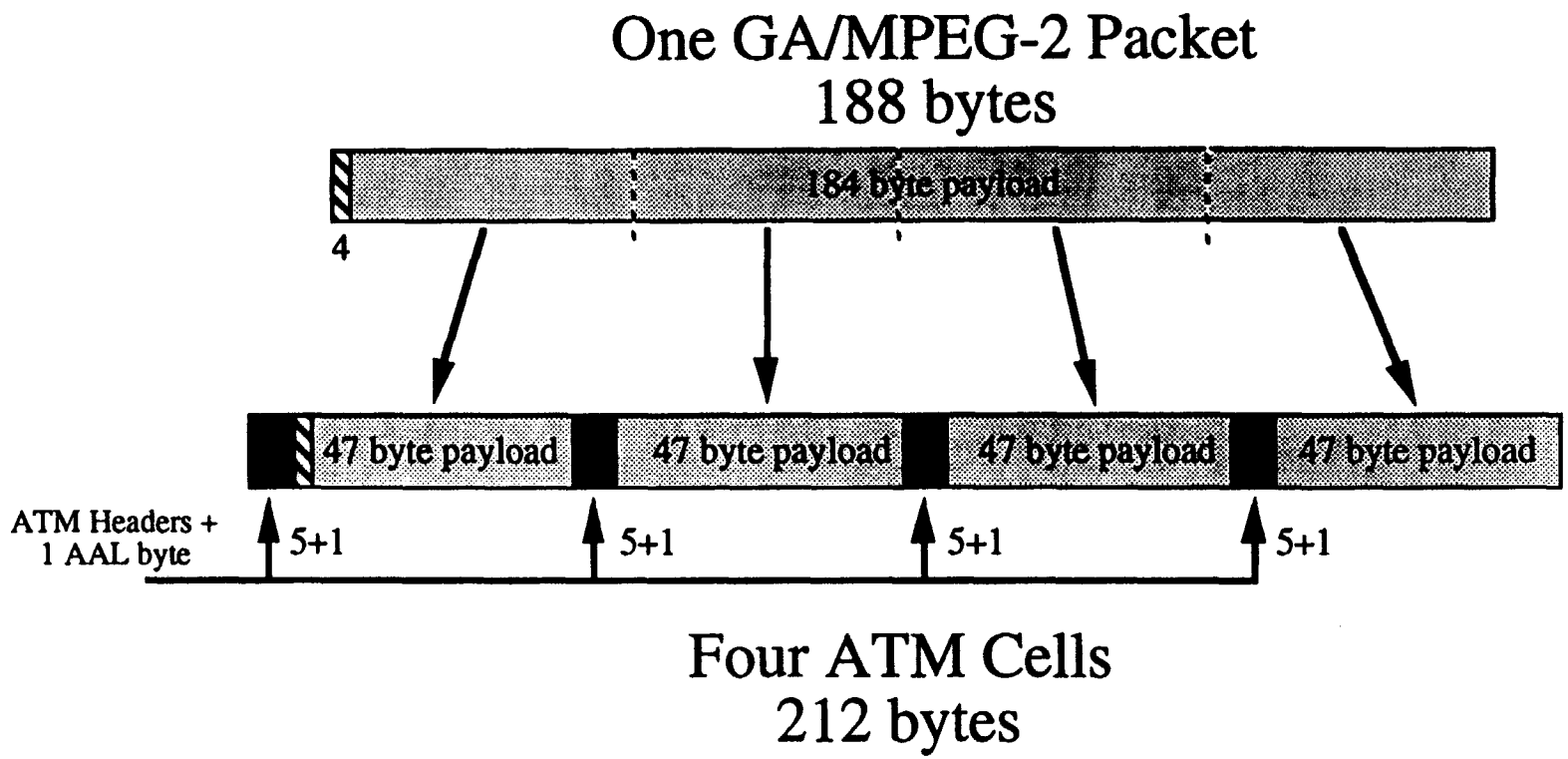

47 Byte ATM Payload x 4 = 188 Byte GA/MPEG-2

ATM Interoperability - Conversion

...an alternate approach that avoids an additional protocol layer...

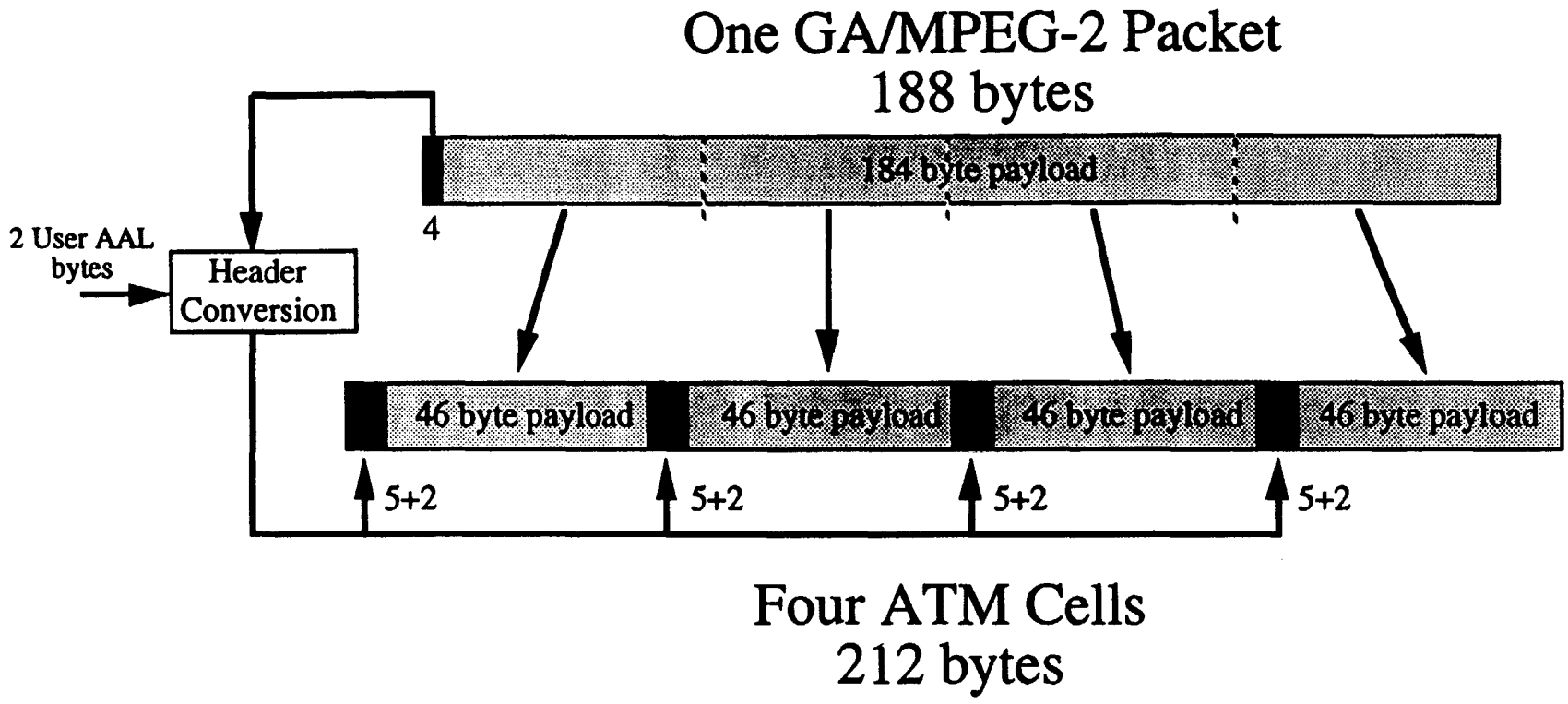

46 Byte ATM Payload x 4 = 184 Byte GA/MPEG-2 Payload

Compression Layer

Fundamental Compression Principles

- Compression is the most complex and computationally intensive layer in an HDTV system
- The compression layer is the standardized "language" by which all receivers interpret the transmitted bit stream
- Variable Length Codes serialize codewords to a bit stream

00000000000000000100000001 11 0010 111 01001101 10 01011...10...

SSC, {MBT, MVs, CBP, {(CO0, RLV0, RLV1...EOB) (CO0, RL0, RL1...EOB)...

- The codeword set represents instructions and data that the decoder uses to reconstruct pixels
- Syntax rules are followed in the ordering of codes

Compression Influences

Cable/Satellite SDTV & HDTV
MPEG-2 ?
≈4 Mbps and greater
a few standard image sizes and frame rates
> VHS quality

MPEG-2 is an emerging multi-industry, international (ISO) video compression standard that provides efficient encoding for both progressive and interlaced sources

U.S. Terrestrial HDTV GA/MPEG-2 with extensions

≈18 Mbps
a few standard image sizes and frame rates
>> VHS quality

Teleconferencing
H.261
≈64 kbps
low frame rate
<< VHS quality
low latency

Computer Multimedia
MPEG-1 and MPEG-2
1.5 Mbps and greater
wide variety of image sizes and display frame rates
wide range of quality

Compression Rates and Quality Scale

... MPEG-2 decoders can differ in data rate, memory size and processing speed...

Resolution	Data Rate (Mbps)	Picture Quality
1920 x 1080	*45*	*≈ Distribution HDTV*
"X" x "1000" 1280 x 720	18	Consumer HDTV
720 x 480	*8-10*	*Studio quality 525*
720 x 480	*4-6*	*"NTSC" quality*
352 x 240	*1.5*	*≈ VHS quality*
176 x 120	*< 1.5*	*< VHS quality*

MPEG-2 Levels and Profiles

... MPEG-2 is a toolkit that addresses a variety of cost/performance grades...

Level

< 1920 x 1152 < 80 Mbps	**High**
< 1440 x 1152 < 60 Mbps	**High-1440**
< 720 x 576 < 15 Mbps	**Main**
< 352 x 288 < 4 Mbps	**Low**

"GA Profile" with syntax extensions?

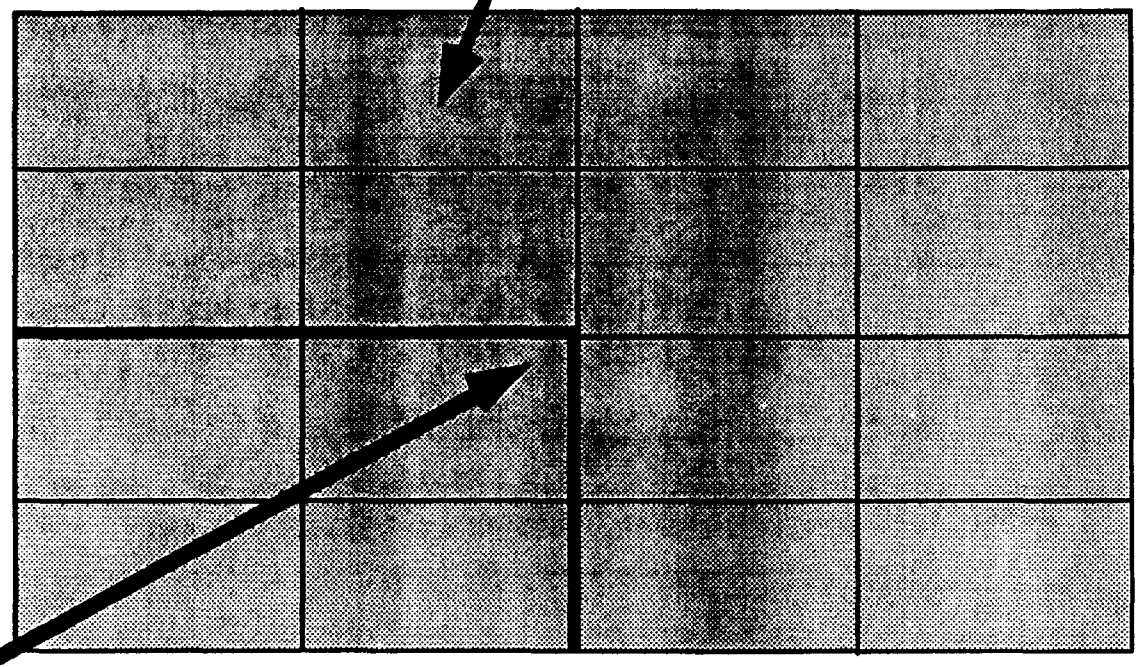

Simple	Main	Main+	Next
No B-frames			Spatial, Freq. & SNR Scalability

Profile

A given decoder will work at its own (or lower) level and profile

GA Compression Syntax

- The GA system syntax is a superset of the MPEG-2 Working Draft syntax
- Working to harmonize GA with MPEG

- Source adaptive coding (header/descriptors for multiple formats)
- MPEG-2 syntax
  - with field/frame coding
  - with I- P- and B- frames
  - with progressive refresh

MPEG-2

- Additional syntax elements for:
  - AC coefficient leaky prediction
- Other improvements under consideration:
  - position-dependent RLC's

GA Extensions

MPEG Sequence Header

sequence_header() {		
sequence_header_code	32	bslbf
horizontal_size_value	12	uimsbf
vertical_size_value	12	uimsbf
sample_aspect_ratio	4	uimsbf
frame_rate	4	uimsbf
bit_rate	18	uimsbf
marker_bit	1	"1"
vbv_buffer_size	10	uimsbf
constrained_parameter_flag	1	
load_intra_quantizer_matrix	1	
if (load_intra_quantizer_matrix)		
intra_quantizer_matrix[64]	8*64	uimsbf
load_non_intra_quantizer_matrix	1	
if (load_non_intra_quantizer_matrix)		
non_intra_quantizer_matrix[64]	8*64	uimsbf
next_start_code()		
•		
•		
•		

MPEG-2 Interoperability

- A GA HDTV Receiver:
  - can decode a HL@MP MPEG-2 bit stream
  - decoding lower levels and profiles is a receiver option
- A ML@MP (or lower) decoder cannot decode the GA or any other HL stream, for speed and memory reasons
- A GA encoder can produce a HL@MP MPEG-2 bit stream by "turning off" syntax extensions

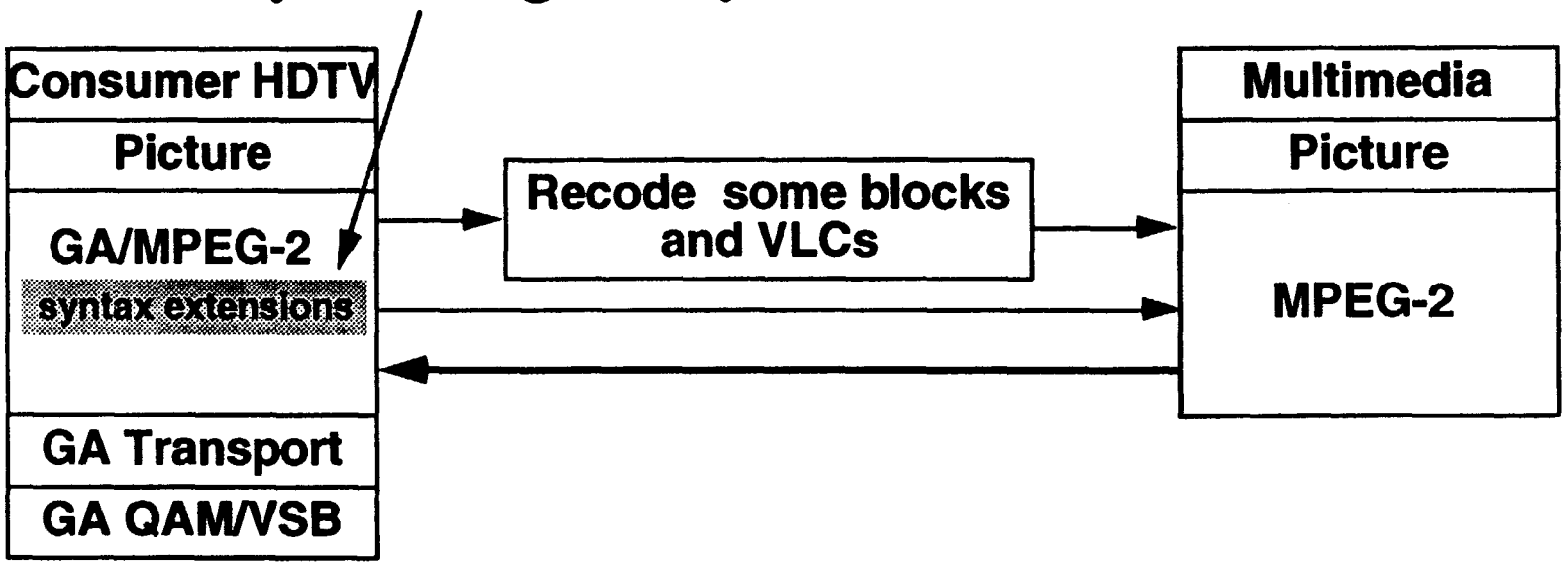

MPEG-1 Interoperability

- An MPEG-2 decoder can decode an MPEG-1 bit stream
- For GA HDTVs, decoding MPEG-1 is a receiver option
- No existing MPEG-1 decoder can decode the GA or any other MPEG-2 stream

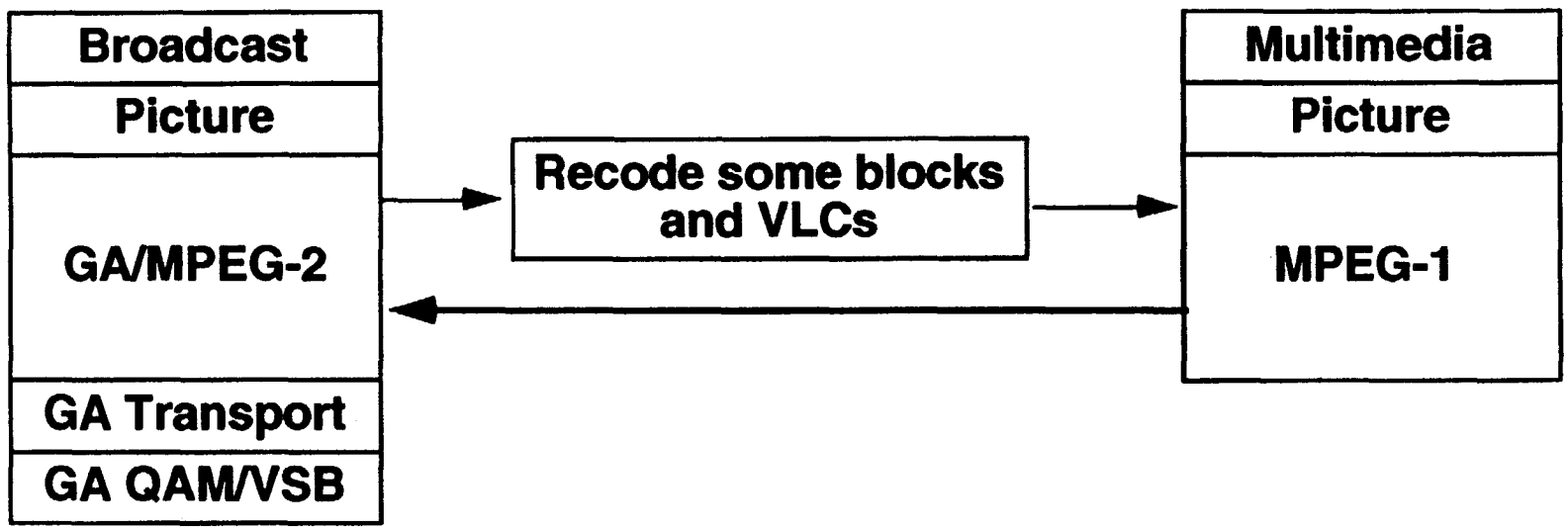

H.261 Interoperability

- MPEG-1 & 2 are generally similar to H.261. MPEG syntax is more complex, but H.261 has a loop filter not used in MPEG
- A programmable MPEG decoder should generally be able to decode H.261
- For GA HDTVs, decoding H.261 is a receiver option

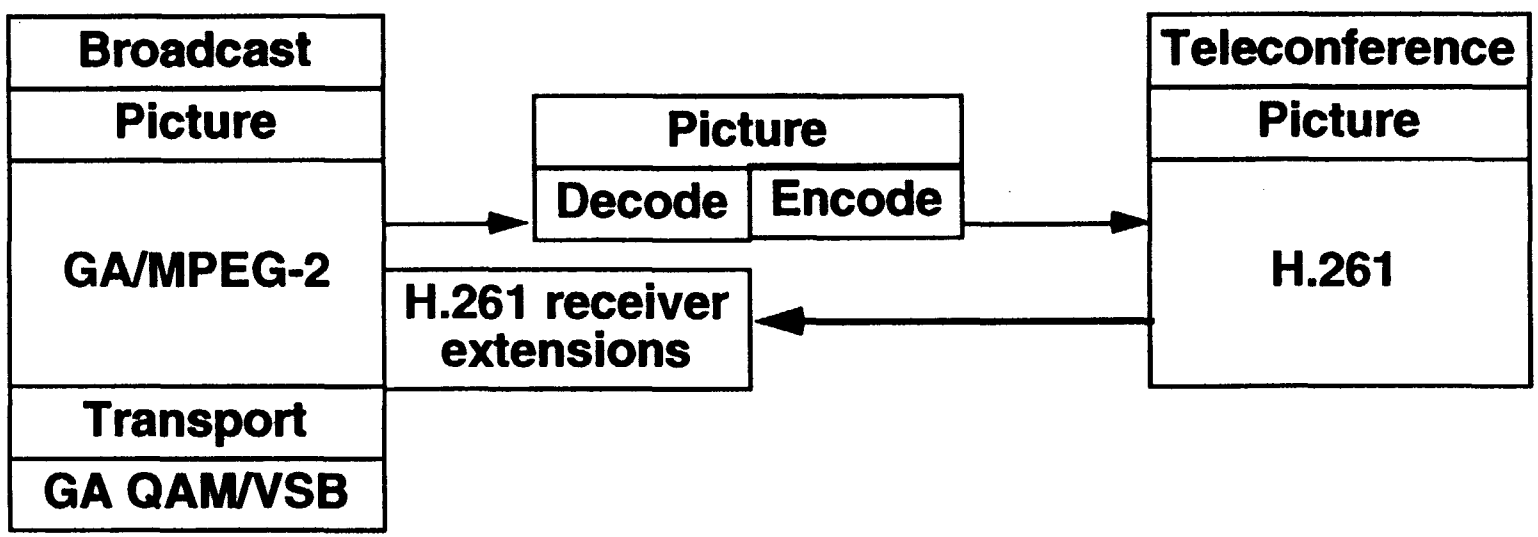

Computer Compressed Video Interface

...picture layer issues are trivial compared to decompression...

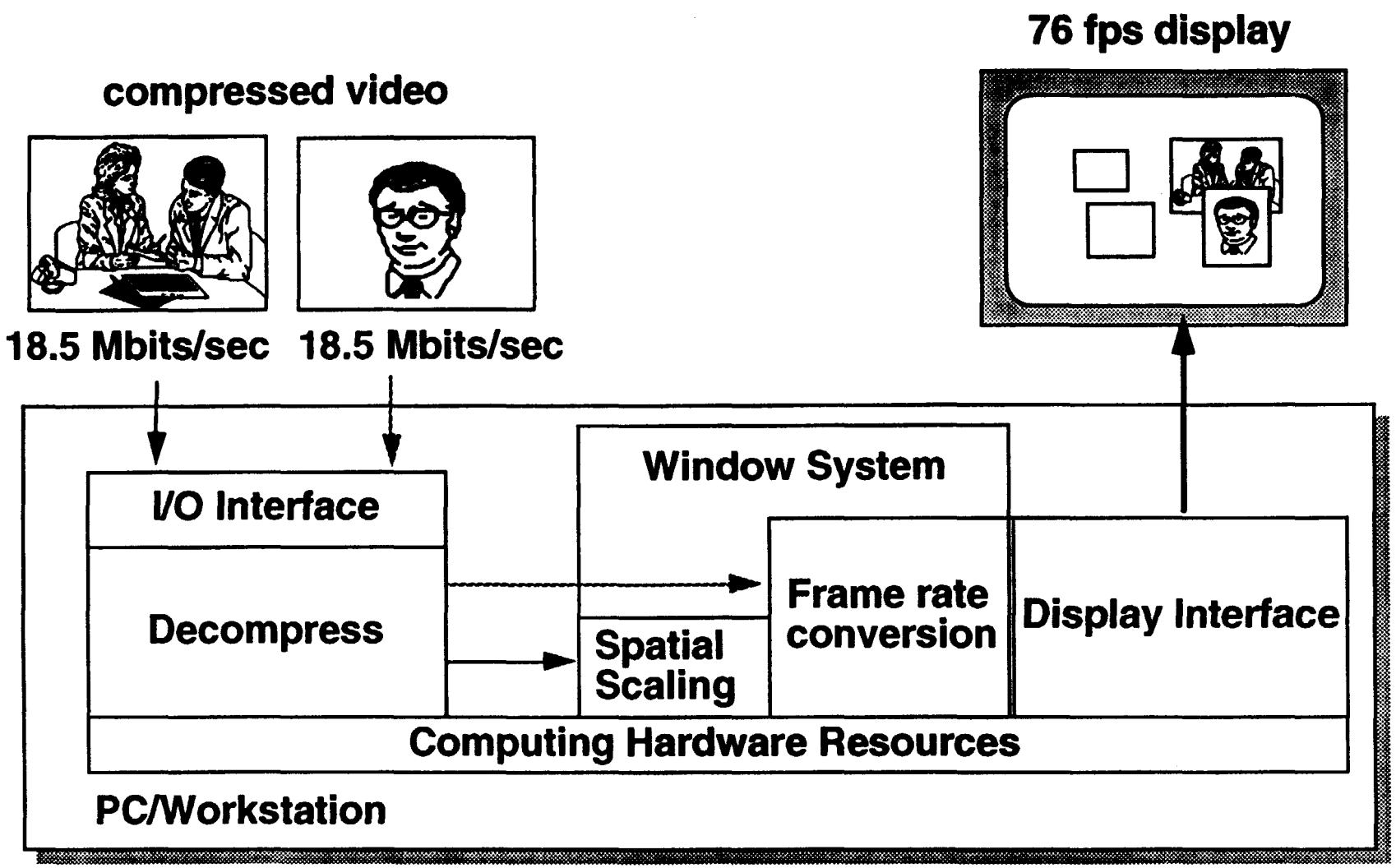

Audio Interoperability

Audio Influences

U.S. Terrestrial HDTV
Dolby or MIT or MUSICAM?
5-channel surround sound
320 - 500 kbps

Cable/Satellite SDTV
???
2-ch composite
≈256 kbps

Digital Compact Cassette
MUSICAM
2-ch composite
≈256 kbps

Flexibility
MIT AC
5-ch independent

Film distribution
Dolby
5-ch composite
≈384 kbps

Computer Multimedia

MPEG-2 → MPEG-1
5-ch MUSICAM
(Other as a non-backward compatible mode?)
MUSICAM
2-ch composite
256 kbps

OTHER?

Audio

- Audio selection has not yet been completed by the GA
- There may be quality differences among the systems
- Audio interoperability is independent of video
- Audio interoperability is significantly eased in comparison to video because of its much lower speed requirements that can be fulfilled with programmable devices (audio is about 2% the data rate of HD video)

Audio

- Audio selection has not yet been completed by the GA
- There may be quality differences among the systems
- Audio interoperability is independent of video
- Audio interoperability is significantly eased in comparison to video because of its much lower speed requirements that can be fulfilled with programmable devices (audio is about 2% the data rate of HD video)

Picture Layer Interoperability

Picture Format Influences

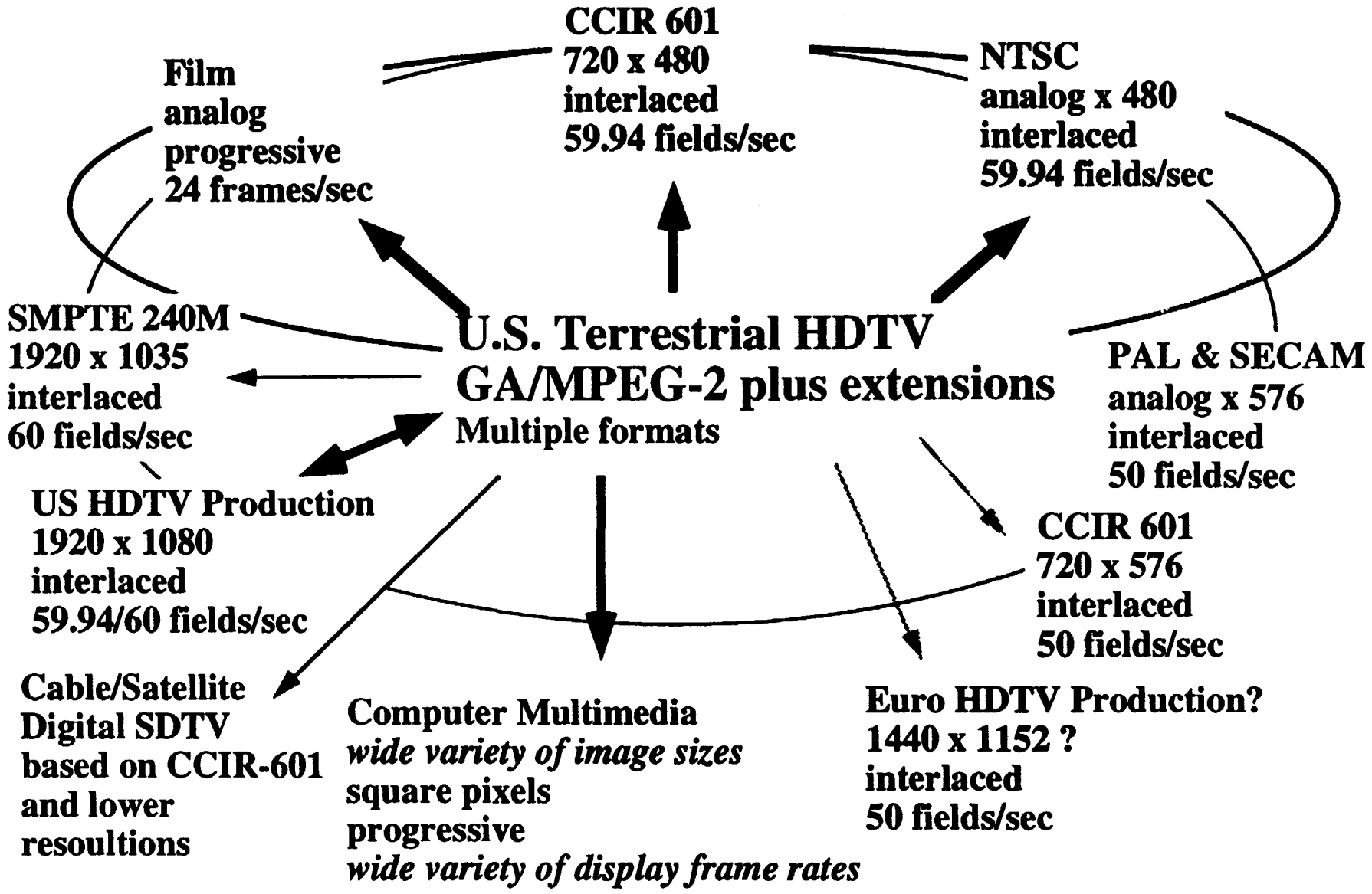

Spatial Format Conversion

- Conversion among different spatial formats requires simple horizontal (and/or vertical) interpolation

original pixels (lines)

interpolated pixels (lines)

- A large number of interpolation filtering approaches exist
- There are tradeoffs between picture quality and interpolation complexity
- Different implementations are appropriate for different applications

Deinterlacing

- Deinterlacing is similar to spatial format conversion - it requires spatial and/or temporal interpolation to fill in the missing lines

interlaced fields

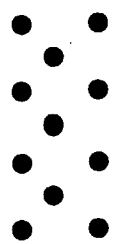

progressive frames

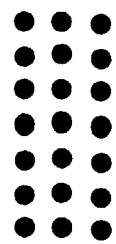

- A large number of deinterlacing approaches exist
- There are tradeoffs between picture quality and deinterlacer complexity
- Different implementations are appropriate for different applications

GA Picture Formats

- "1000" line progressive scan with square pixels at 60 Hz is the long term goal
  - introduction of HDTV is constrained by bandwidth, interference limitations, and other factors

- Multiple video formats (spatial and temporal) will be supported at introduction
  - 720 line progressive
  - "1000" line progressive and interlaced
  - presume that interlaced formats will eventually phase out
  - details of migration path remain TBD

- Best approach to provide capabilities that meet diverse needs

- A GA-HDTV receiver must decode *all* transmitted formats

- Transmission of 24 & 30 fps film will be progressive scan