EX PARTE OR LATE FILED

RECEIVED

DEC 16 1993

FEDERAL COMMUNICATIONS COMMISSION
OFFICE OF THE SECRETARY

DOCKET FILE COPY ORIGINAL

FLEISCHMAN AND WALSH

ATTORNEYS AT LAW
A PARTNERSHIP INCLUDING A PROFESSIONAL CORPORATION

AARON I. FLEISCHMAN

FLEISCHMAN AND WALSH, P.C.
CHARLES S. WALSH
ARTHUR H. HARDING
STUART F. FELDSTEIN
RICHARD RUBIN
JEFFRY L. HARDIN
STEPHEN A. BOUCHARD
R. BRUCE BECKNER
ROBERT J. KELLER
HOWARD S. SHAPIRO
SETH A. DAVIDSON
CHRISTOPHER G. WOOD
MATTHEW D. EMMER
JONATHAN R. SPENCER
DAVID D. BURNS
JILL KLEPPE McCLELLAND
STEVEN N. TEPLITZ
PETER T. NOONE+
ERIN R. BERMINGHAM

+ NEW YORK AND NEW JERSEY BARS ONLY

1400 SIXTEENTH STREET, N.W.
WASHINGTON, D.C. 20036

(202) 939-7900
FACSIMILE (202) 745-0916

December 16, 1993

HAND DELIVERED

Mr. William F. Caton
Acting Secretary
Federal Communications Commission
1919 M Street, N.W.
Washington, D.C. 20554

Re: Ex Parte Notice - MM Docket 92-260, MM Docket 92-266

Dear Mr. Caton:

In accordance with Section 1.1200 et seq. of the Commission's rules, this is to advise that on Thursday, December 16, 1993, Robert S. Jacobs, Vice President and General Counsel, Time Warner New York City Cable Group ("Time Warner"); Larry Pestana, Vice President of Engineering, Paragon Cable Manhattan; Martin J. Schwartz of Rubin, Baum, Levin, Constant & Friedman; and Arthur H. Harding of Fleischman and Walsh met separately with Maureen O'Connell, legal assistant to Commissioner Quello; Byron F. Marchant and James R. Coltharp, legal assistants to Commissioner Barrett; and John C. Hollar, legal assistant to Commissioner Duggan, to discuss issues affecting the above-referenced proceedings. The discussion involved presenting Time Warner's position on cable home wiring and cable rate issues relating to multiple dwelling units and commercial accounts as reflected in the attached materials to be associated with the appropriate above-referenced docket.

No. of Copies rec'd 0+2
List ABCDE

A copy of this ex parte notice was filed with the Commission and delivered to all of the above-named Commission personnel on December 16, 1993.

Very truly yours,

Arthur H. Harding

Arthur H. Harding

AHH/rsc/12271
cc: Maureen O'Connell
Byron F. Marchant
James R. Coltharp
John C. Hollar

RECEIVED

DEC 1 6 1993

FEDERAL COMMUNICATIONS COMMISSION
OFFICE OF THE SECRETARY

CABLE RATE REGULATION
MM Docket No. 92-266

Cable Rate Issues Relating To Multiple
Dwelling Units And Commercial Accounts

- The FCC should continue to allow a uniform rate structure, including bulk discounts, for various classes or sizes of residential multiple dwelling unit (MDU) buildings, such as apartments, condos and co-ops.

  -- The FCC Rate Order correctly determined that consumers should have the opportunity to benefit from the efficiencies and cost-savings which can be realized in serving MDUs.

  -- Contrary to Liberty's baseless allegations, Time Warner offers a uniform 25 percent bulk MDU discount on various cable service packages. This uniform discount structure is available to all residential MDUs with 15 or more units throughout Manhattan.

  -- Contrary to Liberty's false assertion, Time Warner has marketed its bulk rates to all eligible buildings in Manhattan. Time Warner has notified by direct mail all eligible buildings of the availability of a bulk rate contract. This is in contrast to Liberty, which generally limits its marketing efforts to affluent neighborhoods and whose promotional literature states: "Liberty serves exclusively the better residential buildings of New York." Liberty engages in blatant economic redlining.

  -- Time Warner's bulk discount for MDUs is priced in excess of cost, and thus is not "predatory." Indeed, Time Warner's non-discriminatory bulk rate structure has been approved both by New York City and the New York State Commission on Cable Television.

  -- Time Warner's bulk rate is higher than Liberty's most comparable bulk rate; Time Warner adheres to its published bulk rate schedule and does not undercut Liberty's rates at particular MDU buildings. In addition, Time Warner's bulk rate contracts about which Liberty complains are non-exclusive and are terminable on three months notice; Liberty's contracts, by contrast, are generally from five to ten years in duration and purport to be exclusive.

  -- Time Warner's MDU bulk rate structure satisfies both prongs of the test adopted in the FCC Rate Order.

* The bulk discount rate structure is available uniformly to all residential MDU buildings in the franchise area with 15 or more units.

* Time Warner derives economic benefit from providing a bulk rate discount, inter alia, because it receives payment for every unit in the MDU. In non-bulk MDU buildings, Time Warner's average penetration is only about 60 percent.

-- If cable operators are prohibited from offering bulk contracts to MDUs, such a ban should apply equally to all multichannel video programming distributors (MVPDs).

- The uniform rate structure requirement should not apply to commercial accounts such as bars and restaurants.

  -- Such accounts often demand "customized" channel line-ups and service offerings. Thus, each commercial account constitutes its own unique category in the cable operator's rate structure.

  -- Due to the fact that more people are likely to view cable service in commercial establishments, programmers often charge higher rates to the cable operator.

  -- The Commission has itself properly recognized that the rationale for requiring service to additional outlets within a residential dwelling at no extra charge cannot be fairly applied in a commercial context.

- The uniform rate structure requirement should not apply to hotels and similar transient occupancy facilities.

  -- Video programming distribution for hotels is highly competitive.

    * National companies like Spectradyne specialize in serving hotels and have long offered pay-per-view and free-to-guest services (e.g., HBO, CNN, ESPN and other cable networks). Such companies have favorable long-term programming contracts, often at rates better than those available to cable operators, and they negotiate long-term contracts with national hotel chains as well as independents.

    * Spectradyne, the largest video programming distributor to hotels, by itself provided PPV service to over 707,000 rooms in 2,544 hotels and

free-to-guest channels in over 333,000 rooms in over 1,000 hotels nationally, as of June 30, 1993.

* Hotels also have the ability to operate (directly or through an independent contractor) a SMATV/MATV system on premises or to contract with an MMDS or wireless cable company (e.g., Liberty Cable). Many hotels employ such facilities or services in lieu of franchised cable television service, and other hotels frequently cite these alternatives in the course of negotiating with franchised cable operators.

* Liberty has actively solicited business from all the better hotels in New York City (see Attachment 1). As a result, such hotels have approached Time Warner to see if it would provide a lower rate. This is how competition should work. Liberty urges that Time Warner be handcuffed, unable to respond to a lower rate proposal from Liberty.

-- Hotels do not lend themselves to uniform rates because hotels demand and receive customized service packages to meet the special needs of the hotel and its particular clientele.

* Hotels generally choose the number of channels they want and the particular programming to be delivered by the cable operator. Customized channel line-ups are often created so that certain channels can be used for video services provided by the hotel or an independent vendor under contract to the hotel.

* Hotel accounts are typically negotiated individually in light of factors such as location, room rate, occupancy level, season, state of the economy, whether premium and pay-per-view services are to be provided, and a host of other variables rendering uniformity impossible.

* Because hotels are often part of a chain (local, regional, national), they have additional leverage in negotiating cable rates.

-- Cable operators can more profitably offer lower rates to hotels than to residential accounts.

* Programming costs for hotel accounts are generally lower than for residential customers, and other cost savings and efficiencies typically attach to hotel service. In many hotels, for example, the

hotel has a pre-existing distribution system and Time Warner is not contractually responsible for constructing or maintaining internal cable facilities or for delivering signal to the television sets in the rooms but only for delivery to an interface with the hotel's distribution system.

* Time Warner's negotiated hotel rates are above cost and are not predatory. In Manhattan, Liberty Cable recently has been able to win contracts for at least four large luxury hotels with over 3,700 rooms. Many other hotels in Manhattan have contracts with Spectradyne, Guestserve, OnCommand, or a similar service, or have SMATV/MATV facilities.

- Cable operators should be free to meet any rate offered to an MDU by unfranchised MVPDs.

  -- If the FCC truly seeks to promote competition rather than to simply give unfranchised MVPDs such as Liberty an unfair competitive advantage, it must allow cable operators to meet the competition.

  -- Liberty shamelessly admits that it has "relied" on the prospect of Time Warner being locked into a rigid uniform rate structure, so that Liberty can easily pluck selected MDU buildings away from Time Warner by undercutting the prevailing regulated price.

  -- Only if cable operators are allowed to respond to lower prices offered by competitors will consumers realize the full benefits of competition and choice among MVPDs.

  -- Obviously, cable operators would not be allowed to charge less than cost in an effort to thwart competition.

- The FCC should deregulate cable rates in MDUs upon a showing that the effective competition test has been met.

  -- The 1992 Cable Act establishes a clear preference for competition over regulation. Rate regulation should be avoided under any circumstances where the statutory effective competition test is met.

  -- Fierce competition exists today for the right to provide service to MDU buildings. SMATV operators have no franchise requirements or other regulatory barriers

to entry, and do not face the same capital obligations as franchised cable operators or the many franchise-mandated non-capital costs, such as franchise fees, PEG access support. I-Nets, etc.

-- The FCC should recognize MDU buildings as a sub-category within the franchise area for applying the effective competition test.

-- In any case where alternative MVPD service is available to 50 percent of the multiple dwelling units in a franchise area, and at least 15 percent subscribe to such service, MDU rates should be deregulated, even if single family household rates remain subject to regulation.

- The uniform rate structure requirement is primarily a matter of local jurisdiction.

  -- The Commission has properly concluded that the uniform rate structure requirement, Sec. 623(d), must be read in conjunction with the rate discrimination provision, Sec. 623(e).

  -- Thus, primary responsibility for enforcement of both Sec. 623(d) and (e) should be left to local franchising authorities, as advocated by NATOA, so long as cable operators remain free to offer reasonable discounts to senior citizens and the hearing impaired.

  -- The FCC should become involved only in the event of a dispute between the franchising authority and the cable operator.

Y CABLE
TELEVISION
Suite 3026, NY, NY 10020
Fax (212) 956-1818

Dear

Liberty is able to reduce your cable TV cost while providing the same programs, better quality of reception and more responsive service. We simply install a 3 foot dish on your roof at our expense and interconnect with the wiring system of the hotel. The enclosed from The New York Times describes how we are breaking the cable TV monopoly in New York by providing bulk service direct from satellite. Liberty is becoming very popular with better residential buildings and fine hotels.

We would be happy to provide the same programming line-up you currently receive in the for per room. Should you wish to substitute Showtime for HBO, the rate would be per room or suite regardless of the number of TV sets.

Installation takes no longer than a few hours and does not disrupt or disturb any existing facilities. Furthermore, Liberty does not charge any additional fees for operation or maintenance of the equipment and we guarantee to have a technician assigned to your hotel who is immediately available to service any type of call within the hour.

At your request, we will review in confidence your current agreement with MCTV to explore how Liberty service may be substituted. Meanwhile we would be happy to show you any of our sites to view our system and validate the clarity of our picture quality. In the meantime, I will have our chief engineer conduct a survey of the premises.

Sincerely,

Peter O. Price
President

RECEIVED

DEC 1 6 1993

FEDERAL COMMUNICATIONS COMMISSION
OFFICE OF THE SECRETARY

FLEISCHMAN AND WALSH

ATTORNEYS AT LAW
A PARTNERSHIP INCLUDING A PROFESSIONAL CORPORATION

AARON I. FLEISCHMAN

FLEISCHMAN AND WALSH, P. C.
CHARLES S. WALSH
ARTHUR H. HARDING
STUART F. FELDSTEIN
RICHARD RUBIN
JEFFRY L. HARDIN
STEPHEN A. BOUCHARD
R. BRUCE BECKNER
ROBERT J. KELLER
HOWARD S. SHAPIRO
SETH A. DAVIDSON
CHRISTOPHER G. WOOD
MATTHEW D. EMMER
JONATHAN R. SPENCER
DAVID D. BURNS
JILL KLEPPE McCLELLAND
STEVEN N. TEPLITZ
PETER T. NOONE+
ERIN R. BERMINGHAM

+ NEW YORK AND NEW JERSEY BARS ONLY

1400 SIXTEENTH STREET, N. W.
WASHINGTON, D. C. 20036

(202) 939-7900
FACSIMILE (202) 745-0916

December 16, 1993

HAND DELIVERED

Mr. William F. Caton
Acting Secretary
Federal Communications Commission
1919 M Street, NW
Washington, DC 20554

Re: Response to Ex Parte Notices -- Cable Home Wiring, MM Docket No. 92-260

Dear Mr. Caton:

In accordance with Section 1.1200 et seq. of the Commission's Rules, Time Warner Entertainment Company, L.P. ("Time Warner") hereby submits this response to the ex parte presentations filed by Liberty Cable Company, Inc. ("Liberty") and the NYNEX Telephone Companies ("NYNEX") in this proceeding on July 28, 1993; September 24, 1993 and October 19, 1993. Time Warner submits this response in order to address points raised by Liberty and NYNEX that fail to recognize both the plain language of the home wiring statute and the practical application of the home wiring rules as proposed by Liberty and NYNEX.

- Liberty and NYNEX are proposing modifications to the cable home wiring rules which would allow unfranchised multichannel video programming distributors ("MVPDs") to confiscate substantial portions of a cable operator's plant, well outside the customer's dwelling unit, beyond the scope of the statutory home wiring provisions.

- Liberty and NYNEX are attempting to subvert the intent of the home wiring rules to afford even greater competitive advantages to unfranchised MVPDs when competing with franchised cable operators.

- Liberty and NYNEX seek to contort the home wiring rules to thwart competition by allowing multiple dwelling unit ("MDU") building owners and managers to interfere with the ability of individual dwelling unit residents to select the multichannel video programming distributor of their choice.

I. The most practical point of demarcation in MDUs is the wall plate in each individual unit, but in no event should it extend beyond twelve inches from where the wiring enters the individual dwelling unit.

The Commission has established a demarcation point for home wiring in MDUs at (or about) twelve inches from the point where the cable wiring enters the individual dwelling unit.[1] As the Commission has recognized,[2] Congress has stated that the scope of the home wiring provision is limited to "the cable installed within the interior premises of a subscriber's dwelling unit," and that it is "not intended to cover common wiring within the MDU building."[3] Accordingly, Time Warner and numerous other commenters urged that the demarcation point in MDUs should be set at the wall plate inside the individual dwelling unit. As shall be shown below, setting the demarcation point at the wall plate is the only practicable alternative in the case of MDUs with distribution cable wiring in inaccessible conduit.[4]

In order to fully appreciate the situation, it is necessary to understand the basic types of video distribution architecture typically employed in MDU buildings. MDU video distribution architecture can generally be categorized as either "homerun" or "loop-through." Loop-through and related series configurations are discussed in Sec. III, infra. In a homerun configuration, the video distribution cable enters the MDU building and then is typically distributed to each floor through vertical "risers." See Diagram A. The riser cable typically carries signal to numerous locations throughout the building, and thus any break in the riser could interfere with the ability to provide service to customers located "downstream," just as in the case of loop-through or series configurations discussed in Sec. III, infra.

---

[1] 47 C.F.R. § 76.5(mm).

[2] See Cable Home Wiring Report and Order, MM Docket 92-260, 8 FCC Rcd 1435, ¶ 10 (1993) ("Report and Order").

[3] H.R. Rep. No. 628, 102d Cong., 2d Sess. 118 (1992) ("House Report").

[4] Report and Order, 8 FCC Rcd 1435, n.26.

At various points throughout the building, the riser in a homerun configuration enters a distribution box, which is often located in the stairwell. See Diagram B. From the distribution box, a separate, dedicated cable is installed through the common areas of the building (hallways, party walls, floors, ceilings, etc.) to the premises of each MDU resident on the floor or floors served from that distribution box. See Diagram C. It is this dedicated cable extending from the distribution box which is often referred to as the "homerun." The riser cable then carries signal on to the next distribution box, often located on another floor.

In the case of such homerun MDU installations, the demarcation point established in the Commission's rules for multiple unit installations, 47 C.F.R. § 76.5(mm), does not distinguish between cables that enter individual apartment units directly from adjacent publicly accessible areas such as hallways (Situation I), and installations that enter through internal conduits or common closets not accessible in any public area of the building in the vicinity of the apartment (Situation II). The Commission's twelve-inch rule is concededly workable in Situation I, at least so long as the Commission rejects Liberty's proposal which would allow the competing MVPD to seize splitters or other hardware which may be located within this 12-inch zone and which may be necessary to provide service to other MDU residents. As interpreted by Liberty, however, the rule would not be workable in Situation II, because the cable cannot be accessed 12 inches outside the perimeter of the terminating subscriber's apartment without invading the apartment of another tenant and/or causing significant physical damage to walls, floors, or ceilings in which cable or conduit housing cable may be encased.

As a preliminary matter, it must be stressed that Liberty has presented a grossly distorted view of common MDU construction practices in New York City. Time Warner's experience is that the overwhelming majority of MDU buildings fall into Situation I, where the homerun cable is located in readily accessible public areas such as hallways, often enclosed in wiremold which allows convenient splices. Situation II, where homerun cable is inaccessible, is clearly the exception. In any event, based on its interpretation of the rule to render it unworkable, Liberty asks the Commission to amend the rule to allow the tenant to acquire cable hundreds of feet outside the apartment on the false pretext that is necessary in order to permit a competing MVPD to use the home wiring in the tenant's apartment. Liberty's proposal is at odds with the plain language and purpose of Section 16(d) of the 1992 Cable Act, 47 U.S.C. § 544(i). Congress intended only that the Commission prescribe rules for the disposition of "cable installed by the cable operator within

the premises of [a] subscriber," 47 U.S.C. § 544(i), not cable facilities in other areas of a multi-unit building. Indeed, Liberty's interpretation would flatly contradict the express Congressional directive that the home wiring rules are "not intended to cover common wiring within the MDU building."[5] Moreover, Liberty's conclusion that the implementing rule promulgated by the Commission is unworkable in Situation II is based on an unnecessarily rigid and untenable interpretation of the rule.

To facilitate a logical, practical interpretation of the rules as applied in Situation II, the point "where the cable wire enters the subscriber's dwelling unit," 47 C.F.R. § 76.5(mm), should be understood to mean the point at which the cable enters the interior living space of the apartment (becoming visible to the eye without use of X-ray equipment), not the point where the cable technically crosses the outside wall of the apartment unit. The latter point, as Liberty acknowledges, may not be visible or accessible (or, in some cases, even ascertainable) by the tenant or the cable operator.

Furthermore, the term "at (or about) twelve inches," 47 C.F.R. § 76.5(mm), should be interpreted flexibly yet rationally, with a particular emphasis on the words "or about" in Situation II. The Commission presumably did not intend to apply its twelve-inch guideline so rigidly as to require a cable operator or tenant to sever "home wiring" at a place that is impracticable to access. Under such circumstances, the demarcation point must necessarily be the nearest accessible point within 12 inches of the place where the cable enters the interior living space of the apartment.

The foregoing interpretation of the rule is in keeping with the language and purpose of Section 16(d). Liberty's proposal to amend the rule, by contrast, would permit tenants of a building (for a nominal price that would not include any component for the labor incurred to install cable throughout the building) to assume ownership and control of vast extents of cable well beyond the perimeters of their respective apartments. Homerun cable terminating at the wall plate in a particular apartment will often extend vertically several stories above or below the apartment, and a hundred or more feet horizontally before reaching its point of origin in a junction box in a stairwell or other common area of the building.

Liberty often misappropriates Time Warner's cable facilities in MDU buildings. Liberty's proposed amendment of the home

---

[5]House Report at 118.

wiring rule seeks to have the Commission put its imprimatur on practices amounting to conversion[6] and unfair competition. Liberty and other MVPDs have no right to earn a profit on the incumbent cable operator's investment and to undersell franchised cable service by means of such parasitic behavior.[7]

The example of 170 East 87th Street, a 27-story apartment building in the New York franchise area of Time Warner's affiliate Paragon Cable Manhattan, illustrates the inherent unfairness of the amendments proposed by Liberty. Paragon was requested by the developer to pre-wire the building with a sophisticated conduit cable system while the building was under construction. Paragon had to pay an outside contractor more than $50,000 to install this system and to supply out of Paragon's own inventory the cable and cable facilities installed at an additional cost in excess of $11,000. These costs do not include the extensive time expended by Paragon's own personnel in supervising and participating in the cable installation. In May 1993, the first tenants began to move into the building, and Paragon began to provide service to residents requesting service on an individual subscriber basis. In August 1993, Liberty began to provide service throughout the building pursuant to a building-wide contract with the building's management. Liberty did not construct its own system, but (without notice to or consent of Paragon) assumed control of thousands of feet of cable and related cable facilities, including junction boxes located in stairwells, that had been installed at great cost to Paragon.

---

[6]In states with cable access laws like New York's Executive Law § 828, the cable installed in a multi-unit building by the cable operator has been held by the Supreme Court to remain the property of the cable operator following installation. See Loretto v. Teleprompter Manhattan CATV Corp., 458 U.S. 419, 441 n.19, 439 (1982). In some cases the conduit or molding may also have been installed and paid for by the cable operator and may constitute its property. In states without such cable access laws, the cable operator's ownership of cable facilities may be established by contract.

[7]The unfairness of Liberty's proposed amendments is aggravated by Liberty's preferred modus operandi, which is to enter into 100 percent penetration contracts with building owners whereunder all tenants must bear the cost of Liberty's service even if they would prefer to receive franchised cable service. Because tenants are thereby discouraged from exercising their statutory right to choose franchised cable service, Liberty's proposed rule amendment would not only permit it to use Time Warner's cable facilities virtually cost-free, but to use them in a manner calculated to exclude Time Warner.

Paragon lost most of its existing customers (whom it had served for only a few weeks), and new residents are being steered to Liberty.

Liberty's proposed rule amendments would permit Liberty and the building owners with whom Liberty contracts to avoid the legal consequences of such inequitable conduct in buildings throughout Manhattan simply by offering the displaced cable operator a few pennies per foot for the cable expropriated while disregarding the far greater expense incurred in installing and maintaining such cable and related facilities throughout the building. Franchised cable operators, it may be noted, can never hope to even the score by taking over cable facilities installed in buildings by unfranchised MVPDs: the home wiring rule does not apply reciprocally to unfranchised MVPDs.

Liberty's proffered amendments would render the home wiring rule unconstitutional. If the physical property of a cable operator is to be involuntarily taken from it, just compensation must be determined in an adjudicatory proceeding subject to judicial review; the Commission may not "prescrib[e] a 'binding rule' in regard to the ascertainment of just compensation." Florida Power Corp. v. FCC, 772 F.2d 1537, 1546 (11th Cir. 1985), rev'd on other grounds, 480 U.S. 245 (1987). The Commission has no basis to presume that a cable operator will always (or even generally) be justly compensated for the taking of extensive cable facilities outside individual apartments (and installed in the building prior to and independently of particular requests for service) by a payment of a few cents per foot.

Contrary to Liberty's suggestion, alternative service providers do not need to appropriate the cable operator's system in multi-unit buildings in order to provide a competing service. They can install a cable of their own in common areas of the building, either in the existing conduits[8] or, if conduits are not available or cannot accommodate an additional wire, in hallways or similar publicly accessible areas, or on the exterior of the building.[9] All of these methods are commonly used by franchised cable operators, and the same methods can and should be used by unfranchised MVPDs. The home wiring rule was not

---

[8]There are several buildings in Manhattan in which Time Warner and Liberty have separate cables in the same conduits.

[9]Since most MDUs in New York have been wired by Time Warner in hallways or on the exterior of the building, Liberty cannot plausibly argue that it cannot successfully use these same methods. Indeed, in several buildings known to Time Warner, Liberty has done so.

intended to guarantee that other service providers will always have the identical point of entry to an apartment as the franchised cable operator.

The home wiring rule is intended for the benefit of subscribers to prevent the possibility that cable which has been run throughout a house or apartment and stapled to floors or moldings or placed beneath carpeting may be involuntarily ripped out to his damage and inconvenience. While the home wiring rule enables a terminating subscriber to allow another MVPD to utilize the home wiring it has acquired, the rule does not guarantee that the MVPD will never have to rearrange some of it or supplement it with additional wire in order to provide its service to the subscriber's home. There are limits to how far the definition of "home wiring" can be stretched to accommodate the desire of competing MVPDs to unfairly shift the normal costs of doing business onto their competitors.

Finally, it should be stressed that even in a homerun configuration, the homerun cable located outside the dwelling unit is never intended to be permanently dedicated to the exclusive use of the particular unit where the homerun terminates. Indeed, serious operational problems would be occasioned by Liberty's proposal to change the demarcation point to permit a terminating subscriber to acquire cable outside his apartment all the way to its interface with a riser (and NYNEX's similar proposal to permit acquisition up to the "grounding block"). Even in a homerun configuration, it often happens that the homerun cable becomes damaged or goes bad and cannot be repaired or replaced. In such situations it is necessary to splice a splitter onto another functioning line so that it can serve two apartments instead of one. If another MVPD is allowed to use that line to provide service to one of the apartments, it has the effect of cutting off service also to the other apartment which still wishes (or in the future may wish) to receive franchised cable service.

A similar operational problem would occur in situations where multiple cable outlets in a single apartment or dwelling unit are spaced so far apart that (in order to avoid signal loss) it is necessary to serve certain of the outlets in the apartment by means of a splitter spliced onto a line formerly dedicated solely to an adjacent apartment unit. As in the previous example, the acquisition of such a homerun line by a terminating subscriber may have the effect of cutting off franchised cable television service to a neighbor. In both Situations I and II, the 12" rule cannot be expanded without impinging upon homerun distribution wiring which is used or could be used to provide service to more than one resident, thus interfering with Time Warner's ability to provide cable service upon request.

Since acquisition of homerun lines and/or equipment by a terminating subscriber may have the effect of cutting off franchised cable service to an MDU resident, a cable operator must be allowed to retain control of any cables or equipment (including splitters) that are used or could be used to provide service to more than one customer in any case where such facilities are located outside the "the interior premises of a subscriber's dwelling unit."[10]

II. The home wiring rules are applicable only upon termination of service by a subscriber.

NYNEX has also proposed that the home wiring rules should apply immediately upon installation of cable home wiring.[11] Such a proposition is directly contrary to the plain language of the statute,[12] and creates very real concerns for cable operators. At 170 East 87th Street, the example cited above, the building was still mostly vacant at the time Liberty entered into its contract and commenced to provide its service using Paragon's facilities. When Liberty provides service to new residents as they move into this building, it therefore uses extensive cable wiring previously installed by and at the expense of Paragon that Paragon has never used to serve any subscriber for any period of time, however brief. NYNEX's proposed amendment, therefore, would compound the unfairness and unconstitutionality of Liberty's proposal to extend the definition of home wiring to include cable in common areas of the building.

Furthermore, a cable operator must maintain ownership and control of any cable it has installed that is still being used by it to provide cable service. If subscribers, building management or competitors are free to tamper with or attempt to use such wiring for another purpose, the cable operator cannot be expected to properly carry out its legal responsibility to prevent and correct signal leakage, nor will it be in a position to detect and enforce the statutory provisions against theft of cable service.

---

[10]House Report, supra, at 118.

[11]See NYNEX Petition for Recon. at 5-6.

[12]"[T]he Commission shall prescribe rules concerning the disposition, after a subscriber to a cable system terminates service, of any cable installed. . ." 47 U.S.C. § 544(i) (emphasis added).

III. The Commission should retain its exclusion for loop-through or other similar series cable configurations.

The Commission has wisely excluded loop-through "or similar series cable wire" from its home wiring rules,[13] recognizing that even one break in the wire would result in a loss of cable service to all subscribers "downstream" from the break.[14] Liberty and NYNEX urge the Commission to reverse its decision relating to "loop-through" or other cable wiring installed in a series configuration. Liberty suggests that the alternate provider should be allowed to seize the cable operator's loop-through wiring where "all of the residents want to terminate franchised cable service."[15] NYNEX proposes that the use of loop-through common wiring should be dictated by the building owner. Both proposals ignore the practical realities of provision of multichannel video programming service to MDUs and would thwart competition.

First, it must be recognized that Liberty's suggestion that all residents of a particular building might unanimously and simultaneously elect to switch from Time Warner to Liberty is misleading and unrealistic in the extreme. In Time Warner's experience in Manhattan, even when Liberty signs a building-wide service agreement with the building owner, some residents insist upon retaining franchised cable television service. However, in an effort to achieve "unanimity," Liberty or the building's management sometimes engage in deception or strong-arm tactics to coerce reluctant tenants to terminate franchised cable television service and accept Liberty's service. Even when Liberty procures signed consent forms from tenants, Time Warner, in calling its subscribers to confirm their intentions, sometimes learns that consent forms were procured by pressure or through false or misleading statements and that tenants did not truly wish to terminate their franchised cable television service. Amendment of the rule as proposed by Liberty would cause an increase in the use of such coercive and deceptive practices at apartment buildings in which franchised cable television service is provided by means of a loop-through system, in order to generate an illusory unanimity in favor of an unfranchised service.[16]

---

[13]See 47 C.F.R. § 76.5(mm).

[14]Report and Order, 8 FCC Rcd 1435, ¶ 10.

[15]Liberty Petition for Recon. at 6.

[16]Furthermore, MDU buildings often have a relatively high turnover rate. Future residents should be allowed to elect to receive franchised cable service (and current residents should be

More importantly, if Time Warner were forced to relinquish control over its loop-through plant in MDUs, the result would be that the MDU management could dictate the MVPD from which all residents must receive service. Such a result would be directly contrary to the pro-competitive goals of Congress as expressed in the home wiring provision. Competition can be enhanced only if the incumbent is allowed to retain use of loop-through wiring so that it can continue to serve those residents desiring to retain its service. The alternate provider should be required to install its own wiring in common areas, just as the incumbent cable operator has done. Moreover, forcing cable operators to forego use of series cable throughout an MDU is completely contrary to Congress' intent because Section 16(d) "is not intended to cover common wiring within the building, but only the wiring within the dwelling unit of individual subscribers."[17] The Commission correctly adhered to Congress' intent in this respect when it excluded all loop-through systems from the home wiring rules.

Time Warner urges the Commission not to amend its home wiring rules according to proposals set forth by Liberty and NYNEX. Rather, the Commission should consider the practical application of the rules, and establish rules that are both workable and fair to the parties involved.

Sincerely,

Arthur H. Harding

Arthur H. Harding

AHH/sbc/12103

---

allowed to freely switch among any available MVPD); they should not be bound by the decisions of previous residents. See Time Warner Response to Petitions for Recon. at 8-9.

[17]House Report at 119.

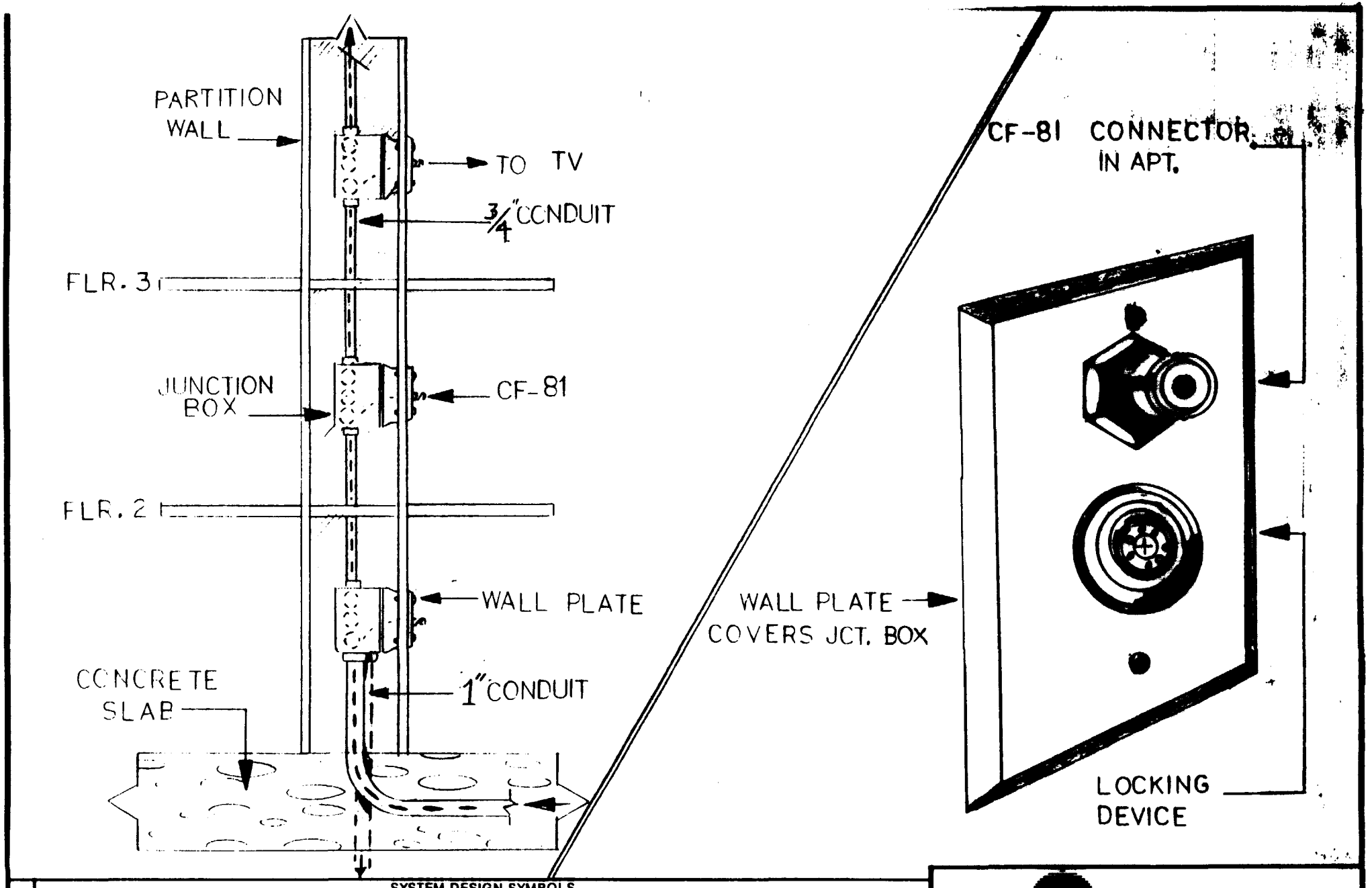

SYSTEM DESIGN SYMBOLS

412" CABLE	TRUNK BRIDGING	LINE EXTENDER	2 WAY SPLITTER
500" CABLE	2 WAY TRUNK-BRDG ALC.	2 WAY LINE EXTENDER	3 WAY SPLITTER
750" CABLE	2 WAY TRUNK	POWER SUPPLY & COUPLER	DIRECTIONAL COUPLER
1000" CABLE	2 WAY TRUNK BRDG W/ALC	IN LINE EQUALIZER	TAP 2 WAY
		TERMINATION	TAP 4 WAY
			TAP 8 WAY

PARAGON CABLE MANHATTAN

PROJECT NO	BLOCK	LOT
TITLE TYPICAL 170 E 87 TH ST		
DATE 11-3-93	SCALE	DRAWN BY F
DWG. NO. 3		

DIAGRAM A

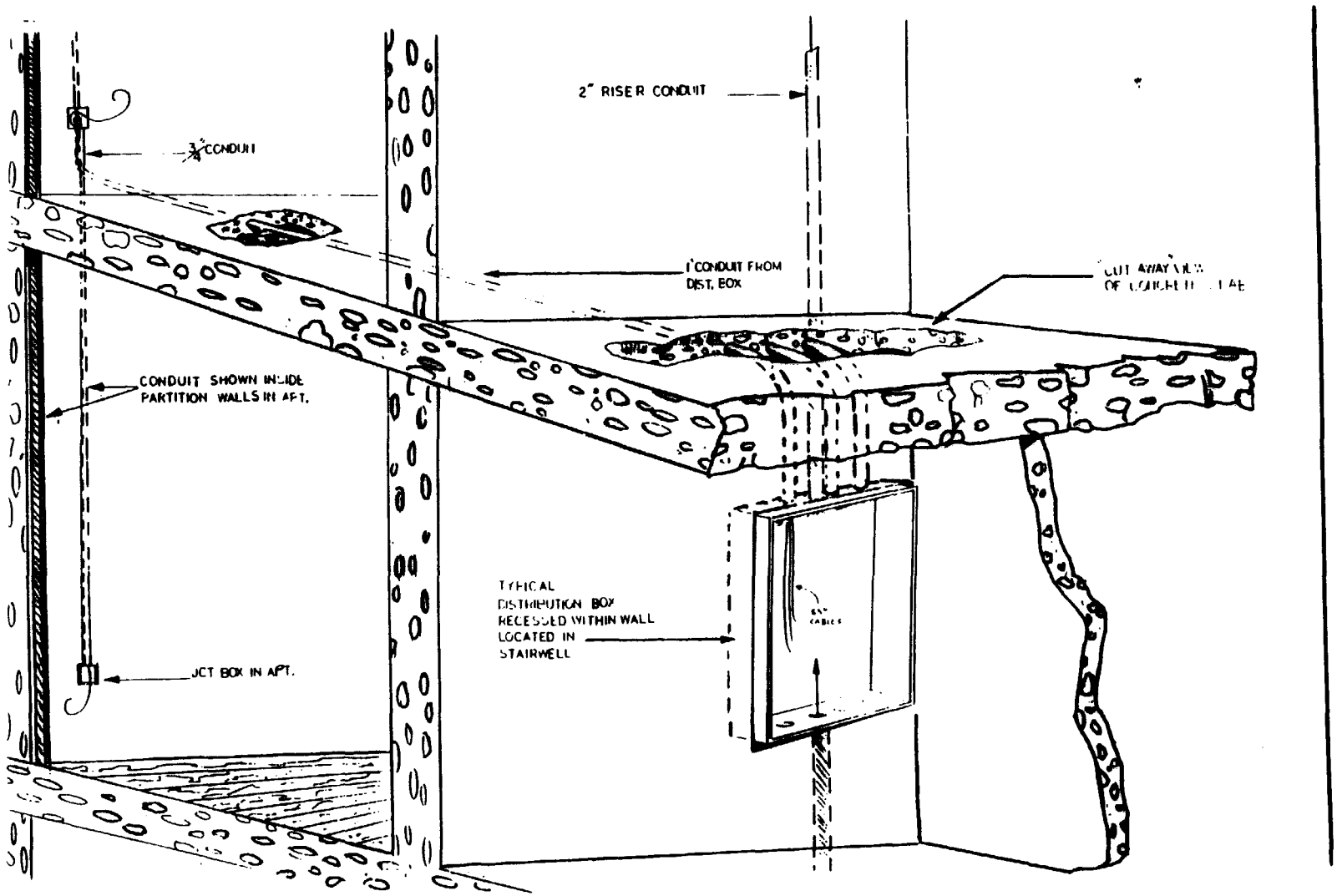

SYSTEM DESIGN SYMBOLS

412" CABLE	TRUNK BRIDGING	LINE EXTENDER	2 WAY SPLITTER
500" CABLE	2 WAY TRUNK-BRDG ALC	2 WAY LINE EXTENDER	3 WAY SPLITTER
750" CABLE	2 WAY TRUNK	POWER SUPPLY & COUPLER	DIRECTIONAL COUPLER
1000" CABLE	2 WAY TRUNK BRDG W/ALC	IN LINE EQUALIZER	TAP 2 WAY
		TERMINATION	TAP 4 WAY
			TAP 8 WAY

PARAGON CABLE MANHATTAN

PROJECT NO	BLOCK	LOT
TITLE		
DATE	SCALE	DRAWN BY	DWG. NO.

DIAGRAM B

160894

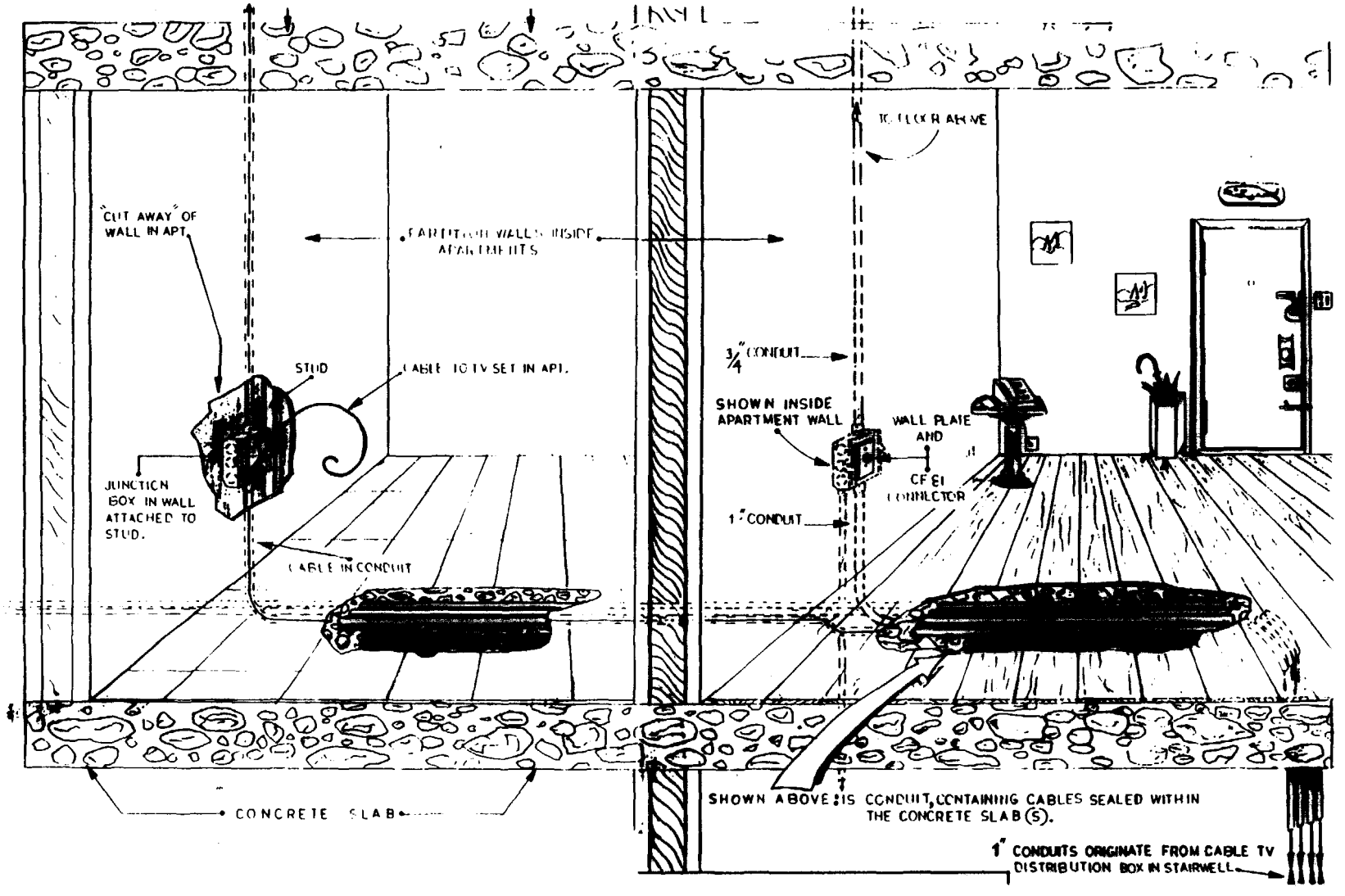

SYSTEM DESIGN SYMBOLS

412" CABLE	TRUNK BRIDGING	LINE EXTENDER	2 WAY SPLITTER
500" CABLE	2 WAY TRUNK-BRDG ALC	2 WAY LINE EXTENDER	3 WAY SPLITTER
750" CABLE	2 WAY TRUNK	POWER SUPPLY & COUPLER	DIRECTIONAL COUPLER
1000" CABLE	2 WAY TRUNK BRDG W/ALC	IN LINE EQUALIZER	TAP 2 WAY
		TERMINATION	TAP 4 WAY
			TAP 8 WAY

PARAGON CABLE MANHATTAN

PROJECT NO	BLOCK	LOT
TITLE		
DATE	SCALE	DRAWN BY	DWG. NO.

DIAGRAM C

100894