REMINDER: Do not complete the following without reading carefully the definitions and other information set out in the foregoing pages.

CERTIFICATION OF PREFERENCES

MINORITY

1. The applicant certifies that it is entitled to and seeks to claim minority preference. [XX] Yes [ ] No

If yes, complete the following:

Name	Address	Percentage Interest in the applicant	Minority Group
Jane Duff	15052 Humphrey Circle Irvine, CA 92714	33-1/3%	Black
David Espinoza	1150 O'Malvery San Fernando, CA 91350	33-1/3%	Hispanic
Paul Crouch	1973 Port Chelsea Place Newport Beach, CA 92660	33-1/3%	None

DIVERSIFICATION PREFERENCE

2. The applicant certifies that it and/or its owners have no interest, in the aggregate, exceeding 50 percent in any media of mass communications. [ ] Yes [XX] No

If Yes, DO NOT respond to questions 3 and 4.

3. The applicant certifies that it and/or its owners have no interest, in the aggregate, exceeding 50 percent in more than three mass communications media facilities. [ ] Yes [XX] No

4. The applicant certifies that it and/or its owners have no interest, in the aggregate, exceeding 50 percent in a media of mass communications in the same area to be served by the proposed station. [XX] Yes [ ] No

1. For Low Power TV applicants, will this ition employ on a full-time basis five or e persons? ☐ Yes ☒ No

If Yes, the applicant must include an EEO program called for in the separate Broadcast Equal Employment Opportunity Report (FCC Form 396-A).

ION VII - CERTIFICATIONS

1. For new station and major change applicants only, the applicant certifies that it has or will comply with the public notice requirement of 47 C.F.R. Section 73.3580(g). ☒ Yes ☐ No

2. For applicants proposing translator rebroadcasts who are not the licensee of the primary station, the applicant certifies that written authority has been obtained from the licensee of the station whose programs are to be retransmitted. ☒ Yes ☐ No

Primary station proposed to be rebroadcast:

Call Sign	City	State	Channel No.
KTBN	Santa Ana	California	92711

3. The applicant certifies that it has contacted an authorized spokesperson for the owner of the rights to the proposed transmitter site and has obtained reasonable assurance that the site will be available for its use if this application is granted. ☒ Yes ☐ No

That person can be contacted at the following address and telephone number:

Name		Mailing Address or Identification	
John LaRue, KJAX Tower Co.		420 N. California	
City	State	ZIP Code	Telephone No. (include area code)
Stockton	CA	95202	(209) 943-1262

The APPLICANT hereby waives any claim to the use of any particular frequency as against the regulatory power of the United States because of the previous use of the same, whether by license or otherwise, and requests an authorization in accordance with this application. (See Section 304 of the Communications Act of 1934, as amended.)

The APPLICANT acknowledges that all the statements made in this application and attached exhibits are considered material representations, and that all exhibits are a material part hereof and incorporated herein.

The APPLICANT represents that this application is not filed for the purpose of impeding, obstructing, or delaying determination on any other application with which it may be in conflict.

In accordance with 47 C.F.R. Section 1.65, the APPLICANT has a continuing obligation to advise the Commission, through amendments, or any substantial and significant changes in information furnished.

WILLFUL FALSE STATEMENTS MADE ON THIS FORM ARE PUNISHABLE BY FINE AND IMPRISONMENT. U.S. CODE, TITLE 18, SECTION 1001.

I certify that the statements in this application are true, complete and correct to the best of my knowledge and belief, and are made in good faith.

Name of Applicant	Signature
NATIONAL MINORITY TV, INC.	Jane Duff
Vice President	Date December 1, 1989

55926

5

NATIONAL MINORITY TV, INC.
FCC FORM 346

EXHIBIT 1

NATIONAL MINORITY TV, INC.
FCC FORM 346
EXHIBIT 1

OFFICERS AND DIRECTORS

The Officers and Directors of the corporation are:

Paul F. Crouch, President/Director
1973 Port Chelsea Place
Newport Beach, California 92660
(714) 832-2676

Jane Duff, Vice President/Director
15052 Humphrey Circle
Irvine, California 92714
(714) 551-2093

Philip D. Espinoza, Secretary-Treasurer/Director
1150 O'Malvery
San Fernando, California 91350
(818) 367-7308

NATIONAL MINORITY TV, INC.
FCC FORM 346

EXHIBIT 2

NATIONAL MINORITY TV, INC.
FCC FORM 346
EXHIBIT 2

OTHER APPLICATIONS

The applicant intends to file applications for new LPTV translators to serve the following communities:

Channel 51, Columbia, South Carolina
Channel 18, Portland, Maine
Channel 21, Sacramento, California
Channel 52, Huntington, West Virginia
Channel 61, Stockton, California

MMB EX. 2860

Trinity Broadcasting Network, Inc.
P.O. Box A, Santa Ana, CA 92711 (714) 832-2950

✓TO NATV #1
- TOCET #1

TELEFAX COVER SHEET

*Colby,
Jane would like to discuss the attached agreements with you.
Sheri

Date: 12/13/89
Time: 5:34 pm.

TO: Colby May

COMPANY: MAY, DUNNE, CHARTERED

FAX NUMBER: (202) 298-6375

FROM: Jane Duff

FAX NUMBER: (714) 730-3568

Total number of pages, including this cover sheet: 5.

PLEASE CALL IF ALL PAGES ARE NOT RECEIVED

Federal Communications Commission

Docket No. 93-79 Exhibit No. 286

Presented by MMB

Disposition
- Hearing DEC 03 19[illegible]
- Received DEC 03 1993
- Rejected

Reporter A Wilson

Date DEC 03 1993

CABLE CARRIAGE AGREEMENT

Cash

SYSTEM NAME:		NMTV STATION:
STREET ADDRESS:		P.O. BOX:
CITY:	STATE:	ZIP:
TELEPHONE: ( )	CONTACT:	NMTV REP:

CHOOSE ONE:	☐ $. PER SUBSCRIBER PER YEAR - 24 Mos.	☐ $. PER SUBSCRIBER PER YEAR - 36 Mos.
(QUARTERLY RATE PER SUBSCRIBER)	REGULAR: $. (NO BONUS)	REGULAR: $. BONUS: $.

PARTIAL CARRIAGE MODIFICATION or SPECIAL NOTES:	* TO BE COMPLETED BY NMTV *
	TERM:_____ to _____
	SUBS: CH. #: ☐ BASIC ☐ TIER

AGREEMENT

This agreement is entered between National Minority TV, Inc., hereinafter referred to as Broadcaster, and the above named cable or SMATV system, or local access or leased channel programmer, hereinafter referred to as CABLE.

RECITAL

1. Broadcaster is a California Corporation that produces and broadcasts Christian and family programming via TV broadcast signals.
2. Cable operates a cable television or SMATV system, or programs a local access or leased cable channel on a cable system in the area listed above.

TERMS

1. Broadcaster agrees to authorize CABLE to receive and retransmit Broadcaster's satellite or TV broadcast signal to CABLE's subscribers.
2. Broadcaster agrees to pay CABLE a cash incentive quarterly, computed as follows: REGULAR RATE times SUBSCRIBERS.
3. If CABLE agrees to carry Broadcaster for a 36 - month period, CABLE will receive an additional quarterly BONUS, computed as follows: BONUS RATE times SUBSCRIBERS. A penalty will be assessed for early termination of agreement by CABLE.
4. Payments shall be made after the end of each quarter of carriage, using the subscriber counts of March 31, June 30, September 30 and December 31. Subscriber counts must be based on the level of service Broadcaster is carried on. Counts may be rounded to the nearest hundred. The subscriber count should be the same count CABLE would use for programmers requiring payment for the use of their product. Corporate or Broadcaster counts shall take precedent over local system counts. Broadcaster shall have the right to conduct a reasonable inspection of CABLE's subscriber records to verify counts.
5. The incentive rate per subscriber shall be fixed at the amount listed above for the TERM of this agreement. If Broadcaster announces a higher rate at a later date, and CABLE is receiving the REGULAR RATE only, CABLE may terminate this agreement., as detailed below, and negotiate a new agreement.
6. No retroactive payments of this incentive shall be made to CABLE for prior carriage of Broadcaster. However, if Broadcaster was already carried during the quarter this agreement was signed, CABLE shall receive full quarter's payment. If the carriage of Broadcaster commences after a quarter has begun, the first incentive payment shall be prorated.
7. Broadcaster shall contact CABLE's authorized representative each quarter via mail to obtain the subscriber count. CABLE shall complete the subscriber count form and return it to Broadcaster. CABLE shall bear sole responsibility in submitting the written count promptly at the end of each quarter. Broadcaster shall not be held responsible, nor shall Broadcaster be required to pay the quarter's incentive if CABLE does not submit its count, written or verbally, within NINETY (90) DAYS of the date due.

MANNER OF CARRIAGE

1. CABLE shall transmit to its subscribers all of the programming that Broadcaster transmits, unless modified above. In the case of partial carriage, no incentive shall be paid unless CABLE carries, at minimum, all of the programming broadcast from 7:00 PM to 10:00 PM, PST. CABLE must carry Broadcaster 24 hours a day to be eligible for the BONUS.
2. CABLE agrees to transmit no other programs over Broadcaster's channel, unless modified above. If CABLE is receiving BONUS payments, CABLE may not downgrade Broadcaster to a lesser-viewed tier without penalty. CABLE agrees to notify Broadcaster immediately of any channel change, temporary or permanent.

DURATION OF AGREEMENT

1. The duration of this agreement, hereinafter referred to as TERM, is listed above. The TERM shall begin upon commencement of the carriage of Broadcaster, or the date this agreement is signed if Broadcaster is already being carried.
2. Either party may terminate this agreement by giving NINETY (90) DAYS written notice. Broadcaster shall not be required to make any payment to CABLE if Broadcaster is dropped without prior written notice from CABLE.
3. If CABLE is receiving the BONUS, and terminates this agreement prior to the completion of a 36-MONTH period of carriage, CABLE will reimburse to Broadcaster the entire BONUS amount paid to CABLE since the beginning of this agreement. This penalty shall not apply if CABLE sells or transfers its system to a new owner. CABLE may also terminate this agreement without penalty if Broadcaster offers a higher BONUS rate at a later date, providing CABLE signs a new agreement and continues the carriage of Broadcaster.
4. If CABLE wishes to upgrade from the REGULAR rate to include the BONUS, this agreement may be terminated on a NINETY (90) DAY written notice and a new agreement negotiated. Prior months of carriage of Broadcaster may not be applied to the new 36-MONTH TERM.
5. This agreement may not be transferred. Upon sale or transfer of ownership of system by CABLE, or sale or transfer of ownership by Broadcaster, this agreement is automatically terminated.

The interpretation and performance of this agreement shall be governed by the laws of the State of California.

Notices or Address changes hereunder shall be in writing, sent by certified, postage prepaid mail to the addresses listed above.

IN WITNESS WHEREOF, the parties hereto have executed this agreement on the dates written below:

FOR CABLE:_____ _____DATE:_____ FOR Broadcaster:_____DATE:_____

GF306 *WHITE: Broadcaster (final) / YELLOW: CABLE (final) / PINK: CABLE (temporary) / GOLDENROD: Broadcaster (temporary)*

CABLE CARRIAGE AGREEMENT

Houston

Cash

SYSTEM NAME:		CET STATION:
:T ADDRESS:		P.O. BOX:
	STATE:	ZIP:
TELEPHONE: ( )	CONTACT:	CET REP:

CHOOSE ONE:	☐ $. PER SUBSCRIBER PER YEAR - 24 Mos.	☐ $. PER SUBSCRIBER PER YEAR - 36 Mos.
(QUARTERLY RATE PER SUBSCRIBER)	REGULAR: $. (NO BONUS)	REGULAR: $. BONUS: $.

PARTIAL CARRIAGE MODIFICATION or SPECIAL NOTES:	* TO BE COMPLETED BY CET *
	TERM:_____ to _____
	SUBS: CH. #: ☐BASIC ☐TIER

AGREEMENT

This agreement is entered between Community Educational TV, Inc., hereinafter referred to as Broadcaster, and the above named cable or SMATV system, or local access or leased channel programmer, hereinafter referred to as CABLE.

RECITAL

1. Broadcaster is a California Corporation that produces and broadcasts Christian and family programming via TV broadcast signals.
2. Cable operates a cable television or SMATV system, or programs a local access or leased cable channel on a cable system in the area listed above.

TERMS

1. Broadcaster agrees to authorize CABLE to receive and retransmit Broadcaster's satellite or TV broadcast signal to CABLE's subscribers.
2. Broadcaster agrees to pay CABLE a cash incentive quarterly, computed as follows: REGULAR RATE times SUBSCRIBERS.
3. If CABLE agrees to carry Broadcaster for a 36 - month period, CABLE will receive an additional quarterly BONUS, computed as follows: BONUS RATE times SUBSCRIBERS. A penalty will be assessed for early termination of agreement by CABLE.
4. Payments shall be made after the end of each quarter of carriage, using the subscriber counts of March 31, June 30, September 30 and December 31. Subscriber counts must be based on the level of service Broadcaster is carried on. Counts may be rounded to the nearest hundred. The subscriber count should be the same count CABLE would use for programmers requiring payment for the use of their product. Corporate or Broadcaster counts shall take precedent over local system counts. Broadcaster shall have the right to conduct a reasonable inspection of CABLE's subscriber records to verify counts.
5. The incentive rate per subscriber shall be fixed at the amount listed above for the TERM of this agreement. If Broadcaster announces a higher rate ar date, and CABLE is receiving the REGULAR RATE only, CABLE may terminate this agreement., as detailed below, and negotiate a new agreement o retroactive payments of this incentive shall be made to CABLE for prior carriage of Broadcaster. However, If Broadcaster was already carried during the quarter this agreement was signed, CABLE shall receive full quarter's payment. If the carriage of Broadcaster commences after a quarter has begun, the first incentive payment shall be prorated.
7. Broadcaster shall contact CABLE's authorized representative each quarter via mail to obtain the subscriber count. CABLE shall complete the subscriber count form and return it to Broadcaster. CABLE shall bear sole responsibility in submitting the written count promptly at the end of each quarter. Broadcaster shall not be held responsible, nor shall Broadcaster be required to pay the quarter's incentive if CABLE does not submit its count, written or verbally, within NINETY (90) DAYS of the date due.

MANNER OF CARRIAGE

1. CABLE shall transmit to its subscribers all of the programming that Broadcaster transmits, unless modified above. In the case of partial carriage, no incentive shall be paid unless CABLE carries, at minimum, all of the programming broadcast from 7:00 PM to 10:00 PM, PST. CABLE must carry Broadcaster 24 hours a day to be eligible for the BONUS.
2. CABLE agrees to transmit no other programs over Broadcaster's channel, unless modified above. If CABLE is receiving BONUS payments, CABLE may not downgrade Broadcaster to a lesser-viewed tier without penalty. CABLE agrees to notify Broadcaster immediately of any channel change, temporary or permanent.

DURATION OF AGREEMENT

1. The duration of this agreement, hereinafter referred to as TERM, is listed above. The TERM shall begin upon commencement of the carriage of Broadcaster, or the date this agreement is signed if Broadcaster is already being carried.
2. Either party may terminate this agreement by giving NINETY (90) DAYS written notice. Broadcaster shall not be required to make any payment to CABLE if Broadcaster is dropped without prior written notice from CABLE.
3. If CABLE is receiving the BONUS, and terminates this agreement prior to the completion of a 36-MONTH period of carriage, CABLE will reimburse to Broadcaster the entire BONUS amount paid to CABLE since the beginning of this agreement. This penalty shall not apply if CABLE sells or transfers its system to a new owner. CABLE may also terminate this agreement without penalty if Broadcaster offers a higher BONUS rate at a later date, providing CABLE signs a new agreement and continues the carriage of Broadcaster.
4. If CABLE wishes to upgrade from the REGULAR rate to include the BONUS, this agreement may be terminated on a NINETY (90) DAY written notice and a new agreement negotiated. Prior months of carriage of Broadcaster may not be applied to the new 36-MONTH TERM.
5. This agreement may not be transferred. Upon sale or transfer of ownership of system by CABLE, or sale or transfer of ownership by Broadcaster, this agreement is automatically terminated.

The interpretation and performance of this agreement shall be governed by the laws of the State of California.

Notices or Address changes hereunder shall be in writing, sent by certified, postage prepaid mail to the addresses listed above.

IN WITNESS WHEREOF, the parties hereto have executed this agreement on the dates written below:

CABLE:_____ DATE:_____ FOR Broadcaster:_____ DATE:_____

GF305 *WHITE: Broadcaster (final) / YELLOW: CABLE (final) / PINK: CABLE (temporary) / GOLDENROD: Broadcaster (temporary)*

CABLE CARRIAGE AG..EEMENT

TBN Cable Sales Center, 9020 Yates, Westminster, CO 80030 (303) 650-6515

Cash

SYSTEM NAME:		TBN STATION: ☐ SATELLITE
:T ADDRESS:		P.O. BOX:
CITY:	STATE:	ZIP:
TELEPHONE: ( )	CONTACT:	TBN REP:

CHOOSE ONE:	☐ $. PER SUBSCRIBER PER YEAR - 24 Mos.	☐ $. PER SUBSCRIBER PER YEAR - 36 Mos.
(QUARTERLY RATE PER SUBSCRIBER)	REGULAR: $. (NO BONUS)	REGULAR: $. BONUS: $.

PARTIAL CARRIAGE MODIFICATION or SPECIAL NOTES:	* TO BE COMPLETED BY TBN *
	TERM: _____ to _____
	SUBS: CH. #: ☐ BASIC ☐ TIER

AGREEMENT

This agreement is entered between Trinity Christian Center of Santa Ana, Inc., dba Trinity Broadcasting Network, hereinafter referred to as Broadcaster, and the above named cable or SMATV system, or local access or leased channel programmer, hereinafter referred to as CABLE.

RECITAL

1. Broadcaster is a California Corporation that produces and broadcasts Christian and family programming via satellite and TV broadcast signals.
2. Cable operates a cable television or SMATV system, or programs a local access or leased cable channel on a cable system in the area listed above.

TERMS

1. Broadcaster agrees to authorize CABLE to receive and retransmit Broadcaster's satellite or TV broadcast signal to CABLE's subscribers.
2. Broadcaster agrees to pay CABLE a cash incentive quarterly, computed as follows: REGULAR RATE times SUBSCRIBERS.
3. If CABLE agrees to carry Broadcaster for a 36 - month period, CABLE will receive an additional quarterly BONUS, computed as follows: BONUS RATE times SUBSCRIBERS. A penalty will be assessed for early termination of agreement by CABLE.
4. Payments shall be made after the end of each quarter of carriage, using the subscriber counts of March 31, June 30, September 30 and December 31. Subscriber counts must be based on the level of service Broadcaster is carried on. Counts may be rounded to the nearest hundred. The subscriber count should be the same count CABLE would use for programmers requiring payment for the use of their product. Corporate or Broadcaster counts shall take precedent over local system counts. Broadcaster shall have the right to conduct a reasonable inspection of CABLE's subscriber records to verify counts.
5. The incentive rate per subscriber shall be fixed at the amount listed above for the TERM of this agreement. If Broadcaster announces a higher rate [illegible]er date, and CABLE is receiving the REGULAR RATE only, CABLE may terminate this agreement., as detailed below, and negotiate a new agreement [illegible]o retroactive payments of this incentive shall be made to CABLE for prior carriage of Broadcaster. However, if Broadcaster was already carried during [illegible]uarter this agreement was signed, CABLE shall receive full quarter's payment. If the carriage of Broadcaster commences after a quarter has begun, the first incentive payment shall be prorated.
7. Broadcaster shall contact CABLE's authorized representative each quarter via mail to obtain the subscriber count. CABLE shall complete the subscriber count form and return it to Broadcaster. CABLE shall bear sole responsibility in submitting the written count promptly at the end of each quarter. Broadcaster shall not be held responsible, nor shall Broadcaster be required to pay the quarter's incentive if CABLE does not submit its count, written or verbally, within NINETY (90) DAYS of the date due.

MANNER OF CARRIAGE

1. CABLE shall transmit to its subscribers all of the programming that Broadcaster transmits, unless modified above. In the case of partial carriage, no incentive shall be paid unless CABLE carries, at minimum, all of the programming broadcast from 7:00 PM to 10:00 PM, PST. CABLE must carry Broadcaster 24 hours a day to be eligible for the BONUS.
2. CABLE agrees to transmit no other programs over Broadcaster's channel, unless modified above. If CABLE is receiving BONUS payments, CABLE may not downgrade Broadcaster to a lesser-viewed tier without penalty. CABLE agrees to notify Broadcaster immediately of any channel change, temporary or permanent.

DURATION OF AGREEMENT

1. The duration of this agreement, hereinafter referred to as TERM, is listed above. The TERM shall begin upon commencement of the carriage of Broadcaster, or the date this agreement is signed if Broadcaster is already being carried.
2. Either party may terminate this agreement by giving NINETY (90) DAYS written notice. Broadcaster shall not be required to make any payment to CABLE if Broadcaster is dropped without prior written notice from CABLE.
3. If CABLE is receiving the BONUS, and terminates this agreement prior to the completion of a 36-MONTH period of carriage, CABLE will reimburse to Broadcaster the entire BONUS amount paid to CABLE since the beginning of this agreement. This penalty shall not apply if CABLE sells or transfers its system to a new owner. CABLE may also terminate this agreement without penalty if Broadcaster offers a higher BONUS rate at a later date, providing CABLE signs a new agreement and continues the carriage of Broadcaster.
4. If CABLE wishes to upgrade from the REGULAR rate to include the BONUS, this agreement may be terminated on a NINETY (90) DAY written notice and a new agreement negotiated. Prior months of carriage of Broadcaster may not be applied to the new 36-MONTH TERM.
5. This agreement may not be transferred. Upon sale or transfer of ownership of system by CABLE, or sale or transfer of ownership by Broadcaster, this agreement is automatically terminated.

The interpretation and performance of this agreement shall be governed by the laws of the State of California.

Notices or Address changes hereunder shall be in writing, sent by certified, postage prepaid mail to the addresses listed above.

IN WITNESS WHEREOF, the parties hereto have executed this agreement on the dates written below:

CABLE: _____ DATE: _____ FOR Broadcaster: _____ DATE: _____

OF307 *WHITE: Broadcaster (final) / YELLOW: CABLE (final) / PINK: CABLE (temporary) / GOLDENROD: Broadcaster (temporary)*

029330

(4)

M
M
B
E
X.

287

NATIONAL MINORITY TELEVISION INC.
P.O. Box C-11949, Santa Ana, CA 92711

Dear Sheri,

Mr McClellan has been selected for employment by NMTV because of his experience and expertise in the field of broadcasting.

NMTV has an affiliation with Trinity Broadcasting Network.

Sincerely
Jane Duffy
V.P.

Federal Communications Commission

Docket No. 9375 Exhibit No. 287

Presented by MMB

Disposition: DEC 03 1993

Received DEC 03 1993

Rejected

Reporter [illegible]

Date DEC 03 1993

MMB

EX

288

KTBN Channel 40 TV
(714) 832-2950

Trinity Broadcasting Network, Inc.
Post Office Box A.
Santa Ana, Ca 92711
2442 Michelle Drive.
Tustin, Ca 92680

Paul F. Crouch
Founder/President

Dec 15, 1989

Dear MR Crouch,

I hereby tender my resignation, as to all my positions, at the Trinity Broadcasting network This will be effective Friday Dec 29th at the en of my work Day.

I will be taking a position with National minority Television Channel 24 in Portland Oregon.

Thank you for your many Kindnesses and confiden in me these many years.

In His Service

Federal Communications Commission

Docket No. 43-75 Exhibit No. 288

Presented by MMB

Disposition: Received DEC 03 1993

Rejected DEC 03 1993

Reporter A Wilbinger

Date DEC 03 1993

m
m
B

E
X.

289

JOSEPH E. DUNNE III
COLBY M. MAY*

*ALSO ADMITTED IN VIRGINIA

MAY & DUNNE
CHARTERED
ATTORNEYS AT LAW
1000 THOMAS JEFFERSON STREET, N.W.
SUITE 520
WASHINGTON, D.C. 20007
(202) 298-6345

RICHARD G. GAY
OF COUNSEL

TELECOPIER NO.
(202) 298-6375

December 19, 1989

CERTIFIED MAIL
RETURN RECEIPT REQUESTED

Federal Communications Commission
Microwave Service
P. O. Box 260850M
Pittsburgh, Pennsylvania 15251-6850

RE: Application of National Minority, TV, Inc. for a Private Operational Fixed Microwave Radio Service

Dear Ms. Searcy:

Transmitted herewith, on behalf of the above-referenced party, is an original and one copy of its application for a fixed microwave radio service (FCC Form 402). It is respectfully requested that that the extra copy be date stamped and returned to this office in the enclosed self-addressed stamped envelope.

Pursuant to section 1.1104 of the Commission's rules the application fee in the amount of $135.00 is tendered herewith.

If any questions should arise concerning this matter, kindly contact the undersigned directly.

Respectfully submitted,

NATIONAL MINORITY TV, INC.

By: Joseph E. Dunne III for
Colby M. May
Its Attorney

CMM:gmcB47

DELIVERY ... requested in the appropriate spaces on the front of this ... blocks in item 1 of Form 3811

SENDER INSTRUCTIONS
Print your name, address and ZIP Code in the space below.
Complete items 1, 2, 3 ...
Attach to ...

Federal Communications Commission

Docket No. 93-75 Entry No. 287

Presented by MMB

DEC 03 1993

Disposition { Received DEC 03 1993
Rejected

Reporter C. Carlson

Date DEC 03 1993

UNITED ST''TES OF AMERICA FEDERAL COMMUNICATIONS ''MMISSION
GETTYSBURG, PA 17326

APPL..ATION FOR STATION AUTHORIZATION IN THE PRIVATE OPERATIONAL FIXED MICROWAVE RADIO SERVICE

Approved by OMB
3060-0064
Expires 10/31/89

FOR COMMISSION USE ONLY

FILE NUMBER:	NEPA: ☐ MINOR ☐ MAJOR Date of NEPA Public Notice	SEND TO ASB: ☐ YES ☐ NO ASB REMARKS:
..CATION NOTICE REQUIRED: YES ☐ NO		

For APPLICANT: Use FCC Form 402 instructions for reference in completing form.

SECTION I—IDENTIFICATION INFORMATION

1. NAME OF APPLICANT: NATIONAL MINORITY TV, INC.

3. CALL SIGN: (If application refers to an existing station)

2. MAILING ADDRESS: (No., street, city, state, ZIP code)
P.O. Box C-11949
Santa Ana, CA 92711

4. LICENSEE IDENTIFICATION NUMBER: (if previously assigned by the Commission)

5A. NAME OF PERSON TO CONTACT REGARDING APPLICATION: W. Ben Miller

☐ Check here if you are a current licensee and your mailing address, item 2, IS NOT the address on file.

5B. TELEPHONE NUMBER OF THE CONTACT: (714) 665-2145

6. TYPE OF APPLICANT: ☐ INDIVIDUAL ☐ ASSOCIATION ☐ PARTNERSHIP ☒ CORPORATION ☐ GOVERNMENTAL ENTITY

7. CLASS OF STATION: (enter code from instruction 7) FXO

8. RULE SECTION UNDER WHICH YOU ARE ELIGIBLE: 90.75

9A. PURPOSE OF APPLICATION:
(A) ☒ NEW STATION (B) ☐ MODIFICATION (SEE 9B & 9C) (C) ☐ MODIFICATION WITH RENEWAL (SEE 9B & 9C) (D) ☐ ASSIGNMENT OF AUTHORIZATION (E) ☐ OTHER (SPECIFY)

9B. PATH	ACTION	OLD VALUE OF KEY ITEMS CHANGED							
A	☐ ADD ☐ CHANGE ☐ DELETE	20		30		31		32	
B	☐ ADD ☐ CHANGE ☐ DELETE	20		30		31		32	
C	☐ ADD ☐ CHANGE ☐ DELETE	20		30		31		32	
D	☐ ADD ☐ CHANGE ☐ DELETE	20		30		31		32	

9C. DESCRIBE ANY OTHER CHANGES:

1..Will the use of this station be shared by another Party?
☐ YES ☒ NO

SECTION II—ANTENNA INFORMATION

11. LOCATION OF TRANSMITTING ANTENNA STRUCTURE:

A. NUMBER AND STREET: (or other specific indication) 5516 SW Barnes Rd.

B. CITY: Portland

C. COUNTY: Multnomah

D. STATE: OR

E. COORDINATES:

LATITUDE: (Degrees, Minutes, Seconds) 45 30 58 NORTH

LONGITUDE: (Degrees, Minutes, Seconds) 122 43 59 WEST

12A. Is the antenna to be mounted on an existing antenna structure? If yes, answer items 12B, C, D, and E.
☒ YES ☐ NO

12B. Will the antenna increase the height of the existing structure? If yes, by how many feet?
☐ YES ☒ NO — FT.

12C. NAME OF CURRENT LICENSEE USING STRUCTURE: NATIONAL MINORITY TV, INC.

12D. CURRENT LICENSEE'S RADIO SERVICE: Broadcast Television

12E. CURRENT LICENSEE'S CALL SIGN: KTDZ-(TV)

13. For antenna towers or (poles) mounted on the ground:

Enter the overall height above ground of the entire antenna (or pole) including all antennas, dishes, lightning rods, obstruction lighting, etc., mounted on it ..... 993 FT.

14. For antennas or antenna towers (or poles) mounted on a supporting structure such as a building, water tower, smoke stack, etc:

A. What is the overall height above ground of this supporting structure? Include in this height any elevator shafts, penthouses, lightning rods, ..hts, etc., which are not a part of the antenna tower (or pole) ..... FT.

B. ..ow many feet does the antenna tower (or pole) (including all antennas, dishes, lightning rods, lights, etc.) increase the height of the sup-..ng structure in Item 14A? If this antenna or antenna tower (or pole) does not increase the height of the supporting structure, enter (0) ..... FT.

C. ..hat is the overall height above ground of this supporting structure plus the antenna tower (or pole)? ..... FT.

15. Give the ground elevation above mean sea level at the antenna site ..... 1056 FT.

16A. NAME OF NEAREST AIRCRAFT LANDING AREA: 16B. DIRECTION AND DISTANCE TO NEAREST RUNWAY:

DEC 21 1989 50 02 028508

17A. Has notice of construction been filed with the FAA on FAA Form 7460-1? If yes, answer items 17B, C, and		☐ YES ☒ NO (See Exhibit 4)
17B. NAME UNDER WHICH YOU FILED:	17C. FAA REGIONAL OFFICE: (City)	17D. DATE FILED:
18. Would a Commission grant of your application be an action which may have a significant environmental effect as defined by Section 1.1307 of the Commission's Rules? See Instruction 18. If you answer yes, submit the statement as required by Sections 1.1308 and 1.1311	☐ YES ☒ NO	19. If this is an existing station, enter the year it was first licensed: N/A

SECTION III—TECHNICAL INFORMATION

NAME OF ITEM	A	B	C	D
20. Frequency (MHz)	945.150			
21. Bandwidth (kHz) and Emission Type	10F3			
22. Type of Message Service	Analog			
23. Initial Baseband Channel Loading	1			
24. 10 yr. Projected Baseband Channel Loading	1			

TRANSMITTER INFORMATION

NAME OF ITEM	A	B	C	D
25. Transmitter Operating Frequency Tolerance (%)	0.000250			
26. Antenna Gain (dBi)	19.2			
27. Effective Isotropic Radiated Power (dBm)	55.2			
28. Beamwidth (Degrees)	17.5			
29. Height to Center of Final Radiating Element (Ft)	200.0			
30. Polarization	H			
31. Azimuth to Receive Site or Passive Repeater (PR) No. 1 (Degrees)				

RECEIVE SITE INFORMATION

NAME OF ITEM	A	B	C	D
32. Receiving Station's Call Sign	---			
33. Receiving Antenna Gain (dBi)	19.2			
34. Median Received Signal Level at Input to the Receiver (dBm)	-40.8			
35. Latitude N (Degrees, Minutes, Seconds)	45 31 32			
36. Longitude W (Degrees, Minutes, Seconds)	122 35 14			
37. Ground Elevation AMSL (Ft)	249			
38. Height to Center of Receiving Antenna (Ft)	22.0			

PASSIVE REPEATER NO. 1 INFORMATION (IF ANY)

If you have two or more passive repeaters on the same transmission path, check this box and answer items 39–46 on an additional FCC Form 402 or a separate sheet of paper for the second and successive passive repeaters.

NAME OF ITEM	A	B	C	D
39. Latitude N (Degrees, Minutes, Seconds)				
40. Longitude W (Degrees, Minutes, Seconds)				
41. Ground Elevation AMSL (Ft)				
42. Overall Height of PR Structure Above Ground (Ft)				
43. Dimensions (Ft X Ft) or Beamwidth (for dishes) (Degrees)				
44. Height Above Ground to Center of PR (Ft)				
45. Polarization				
46. Azimuth to Receive Site or Next PR (Degrees)				

SECTION IV—CERTIFICATION

1. Applicant waives any claim to the use of any particular frequency regardless of prior use by licensee or otherwise.
2. Applicant will have unlimited access to the radio equipment and will control access and exclude unauthorized persons.
3. Neither applicant nor any member thereof is a foreign government or representative thereof.
4. Applicant will utilize type accepted radio equipment and antennas of correct specifications.
5. Applicant certifies that all statements made in this application and attachments are true and complete.

WILLFUL FALSE STATEMENTS MADE ON THIS FORM OR ATTACHMENTS ARE PUNISHABLE BY FINE AND IMPRISONMENT U.S. CODE TITLE 18 SECTION 1001

TYPED NAME: JANE DUFF	TITLE: VICE PRESIDENT
SIGNATURE of individual, partner, official of a governmental entity, officer or authorized employee of a corporation, or officer who is also a member of the association. Jane Duff	DATE: 12-8-89

FEES: Except for Public Safety, Special Emergency, Governmental, and Noncommercial educational broadcast applicants, each Microwave station application must be accompanied by a $135 fee and filed at: FCC, Microwave Service, P.O. Box 360850M, Pittsburgh, PA, 15251-6850. For information on fees call (717) 337-1212.

NOTICE TO INDIVIDUALS REQUIRED BY PRIVACY ACT OF 1974 AND THE PAPERWORK REDUCTION ACT OF 1980

Sections 301, 303, and 308 of the Communications Act of 1934, as amended, (licensing powers) authorize the FCC to request the information on this application. The purpose of the information is to determine your eligibility for a license. The information will be used by FCC staff to evaluate the application, to determine station location, to provide information for enforcement and rule-making proceedings and to maintain a current inventory of licensees. No license can be granted unless all information requested is provided. Your response is required to obtain this authorization.

Exhibit #1 - FCC Form 402

Application for station authorization in the Private Operational Fixed Microwave Radio Service

Statement of Use

The purpose of the proposed facility is for relaying of telemetry information from the KTDZ television broadcast transmitter to the studio remote control system for compliance with Part 73.1410 provisions for remote control operation for broadcast stations.

Submitted By:

W. Ben Miller
Technical Consultant for
National Minority TV, Inc.

Date: December 8, 1989

EXHIBIT 2
FUNCTIONAL SYSTEM DIAGRAM

028511

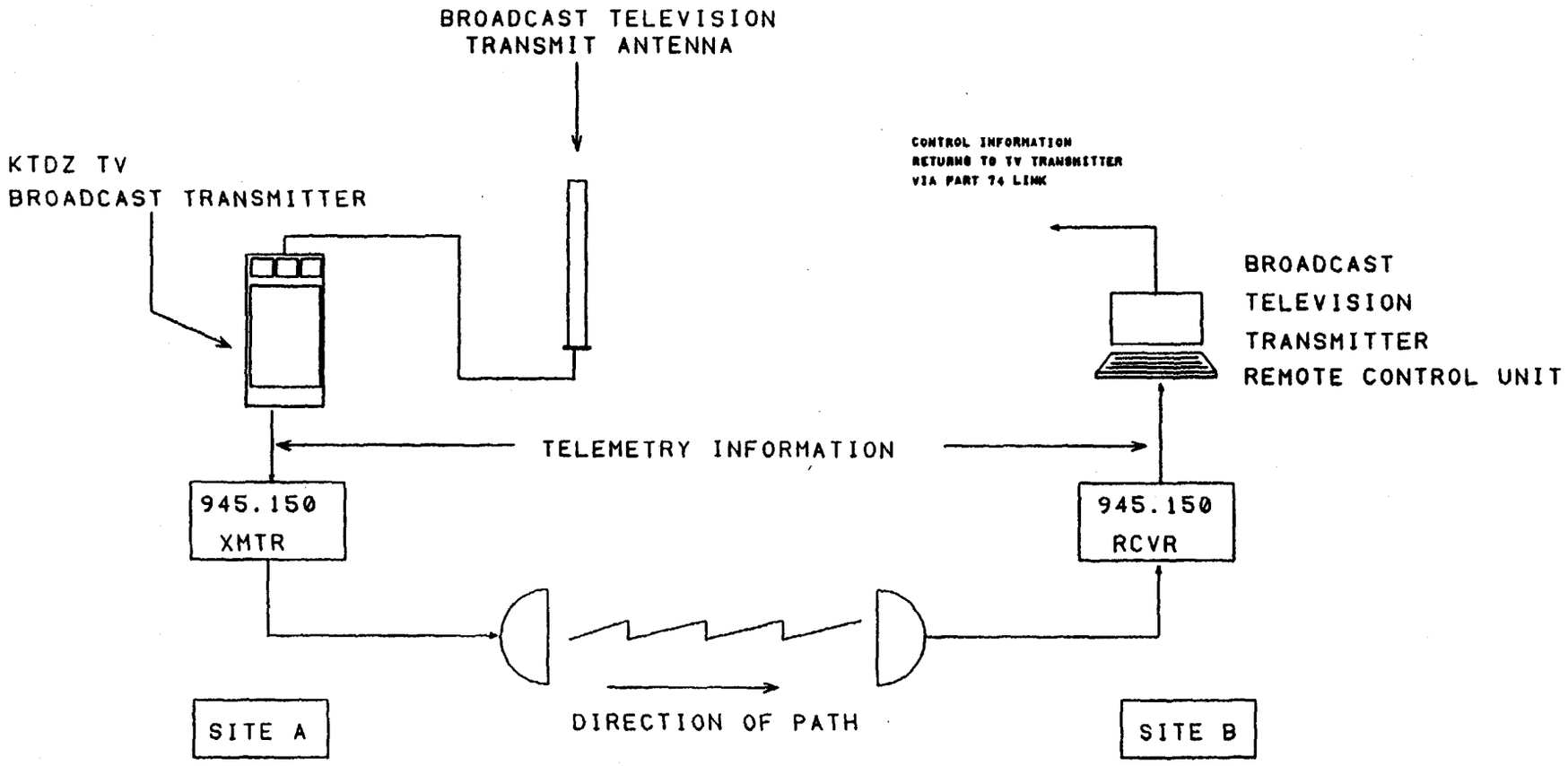

5

SITE A LOCATION: 5516 W. BARNES RD.	45 30 58	122 43 59		
SITE B LOCATION: 432 N. E. 74TH ST.	45 31 32	122 35 14		
PREPARED BY: W. BEN MILLER, TECHNICAL CONSULTANT			DATE: 8 DECMEBER, 1989	