tances from an antenna located in free space, power density can be estimated by applying Eq 9.1.

$$\rho = \frac{P\,G}{4\,\pi\,R^2} \qquad \text{(Eq 9.1)}$$

where

- ρ = estimated power density at distance R from antenna (units will be W/m^2 if P is in watts and R is in m)
- R = distance from observation point to closest point on antenna (in m)
- P = *average* power at antenna feed point (watts)
- G = gain as a power ratio, that is, the numerical gain (do *not* use gain expressed in decibels)

Note that Eq 9.1 holds only if both of the following requirements are met: (1) The free-space model is appropriate and (2) we're at a sufficiently large distance from the antenna to be in the far field. The far field is, in fact, defined as the region where Eq 9.1 is valid.

How far away from the antenna must the observer be for Eq 9.1 to hold? The answer depends on the type of antenna and on our accuracy requirements.

For several types of antennas likely to be used in space communication, we list the minimum distance at which Eq 9.1 may be applied with some confidence to provide an upper-bound (conservative) estimate.

To assure an upper-bound estimate, the free-space antenna gain should be used if the actual value is not known. A textbook value will generally be useful.

Antenna type	*Dimension*	*Minimum distance, R_{min}, for Eq 9.1*
Parabolic dish	diameter, D	$(1/2)\,(D^2/\lambda)$
Broadside array	max linear, L	$(1/2)\,(L^2/\lambda)$
End-fire types:		
Yagi	$L = \lambda/2$	$2L^2/\lambda$
Loop (quad) Yagi	L = max width of loop (quad)	$2L^2/\lambda$
Axial-mode helix	L = diameter of turn	$2L^2/\lambda$

Example: Consider a station with the following characteristics. A Yagi antenna with 13 dBi gain (G = 20) is mounted atop a 33-ft (10-meter) tower. Wavelength at 430 MHz is approximately 0.7 meter. Average power reaching the antenna terminals is 50 watts.

To determine the minimum R at which the far-field power density formula (Eq 9.1) can be applied, note that for a Yagi the maximum linear dimension "L" is roughly the length of an element, or $\lambda/2$.

$$R_{min} = 2L^2/\lambda = \frac{2(0.35\text{ m})^2}{0.35\text{ m}} = 0.35\text{ m}$$

Assume the interest is in the power density likely to occur at a point 50 feet on axis (15 meters) away. Since this distance is greater than R_{min}, we can use Eq 9.1.

Table 9-3

RF Awareness Guidelines

These guidelines were developed by the ARRL Bio Effects Committee, based on FCC/EPA measurements.

- Although antennas on towers (well away from people) pose no exposure problem, make certain that the RF radiation is confined to the antenna radiating elements themselves. Provide a single, good station ground (earth), and eliminate radiation from transmission lines. Use good coaxial cable, not open wire lines or end-fed antennas that come directly into the transmitter area.
- No person should ever be near any transmitting antenna while it is in use. This is especially true for mobile or ground-mounted vertical antennas. Avoid transmitting with more than 25 watts in a VHF mobile installation unless it is possible to first measure the RF fields inside the vehicle. At the 1-kilowatt level, both HF and VHF directional antennas should be at least 35 feet above inhabited areas. Avoid using indoor and attic-mounted antennas if at all possible.
- Don't operate RF power amplifiers with the covers removed, especially at VHF/UHF.
- In the UHF/SHF region, never look into the open end of an activated length of waveguide or point it toward anyone. Never point a high-gain, narrow-beamwidth antenna (a paraboloid, for instance) toward people. Use caution in aiming an EME (moonbounce) array toward the horizon; EME arrays may deliver an effective radiated power of 250,000 watts or more.
- With handheld transceivers, keep the antenna away from your head and use the lowest power possible to maintain communications. Use a separate microphone and hold the rig as far away from you as possible.
- Don't work on antennas that have RF power applied.
- Don't stand or sit close to a power supply or linear amplifier when the ac power is turned on. Stay at least 24 inches away from power transformers, electrical fans and other sources of high-level 60-Hz magnetic fields.

Further discussion of RF safety issues appears in both *The ARRL Antenna Book* (16th Ed.) and *The ARRL Handbook* (1992 and later editions). Also see I. A. Shulman, MD, "Is Amateur Radio Hazardous to Our Health?" *QST*, Oct 1989, pp 31-33, 37. Additional information appears in these sources:

ANSI C95.1-(1982). *Safety Levels with Respect to Human Exposure to Radio Frequency Electromagnetic Fields (300 kHz to 100 GHz)* (New York: American National Standards Institute).

Balzano, Q., O. Garay, K. Siwiak, "The Near Field of Dipole Antennas, Part I: Theory." *IEEE Trans Vehicular Technology* (VT) 30, p 161, Nov 1981). Also "Part II; Experimental Results," same issue, p 175.

Guy, A. W., C. K. Chou, "Thermographic Determination of SAR in Human Models Exposed to UHF Mobile Antenna Fields," Paper F-6, Third Annual Conference, Bioelectromagnetics Society, Washington, DC, Aug 9-12, 1981.

Lambdin, D. L. "An Investigation of Energy Densities in the Vicinity of Vehicles with Mobile Communications Equipment and Near a Hand-Held Walkie Talkie," *EPA Report ORP/EAD* 79-2, Mar 1979.

R. J. Spiegel, "The Thermal Response of a Human in the Near-Zone of a Resonant Thin-Wire Antenna," *IEEE Trans Microwave Theory and Technology* (MTT) 30(2), pp 177-185, Feb 1982.

$$\rho = \frac{P\,G}{4\,\pi\,R^2} = \frac{50 \times 20}{4\pi(15)(15)} = 0.35\text{ watt/m}^2$$

Since 1.0 watt/m^2 equals 0.1 milliwatt/cm^2, this yields

$$\rho = 0.035\text{ milliwatt/cm}^2$$

ANSI 1982 has a protection level of (430/300) milliwatts/cm^2 at 430 MHz, or 1.43 mW/cm^2, for far-field exposure. Our result in the example is less than 3% of the ANSI level.

Comments: The ARRL, through its Committee on the Biological Effects of RF Energy, will continue to keep the

Amateur Radio community informed on current protection issues and knowledge of electromagnetic bioeffects. Even though the preponderance of Amateur Radio operation, because of its fundamentally intermittent nature and relatively low power, poses little RF-protection requirement on antenna proximity, hams should keep abreast of developments and always follow recommended rules of good practice on the management and uses of RF energy.

Dr David Davidson, W1GKM (SK), a member of the ARRL Committee on the Bio-Effects of RF Energy, assisted with this section.

Transmitting Equipment

Amateurs use several methods for obtaining CW/SSB RF power at 145, 435 and 1269 MHz. The deluxe approach is to purchase a multimode transceiver for the desired uplink frequency. This option has not always existed, but today it's possible to buy a unit for all satellite uplink frequencies in use and/or planned for the next decade. Output powers are generally in the range of 10 to 40 watts.

Other approaches to producing an uplink signal include modifying FM equipment (commercial, amateur or military surplus), using a transverter in conjunction with an existing lower-frequency transmitter, exciting a varactor multiplier with an appropriate source, and so on. Power amplifiers are often used to boost the output power of these devices.

Transverter. A transmit converter works very much like a receive converter. Two RF sources are injected into a mixer, which produces sum and difference frequencies. One source is a CW/SSB transmitter and the other a fixed-frequency local oscillator. See Fig 9-18 for an example of a unit designed to generate a 435-MHz CW/SSB signal using a 28-30 MHz transmitter and a 407-MHz fixed frequency oscillator. Almost all commercial transmit converters use a mixer that operates at a very low (a fraction of a watt) power level. A unit will generally include one or more stages of linear amplification to bring the output signal up to the 0.5- to 10-watt range.

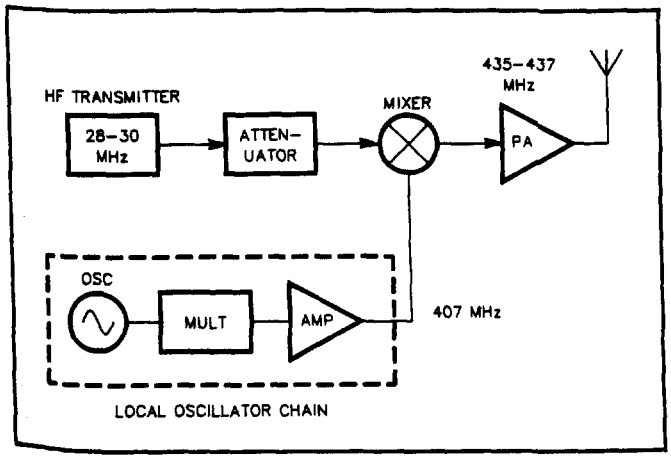

Fig 9-18—Block diagram of typical 10-meter-to-70-cm transmit converter.

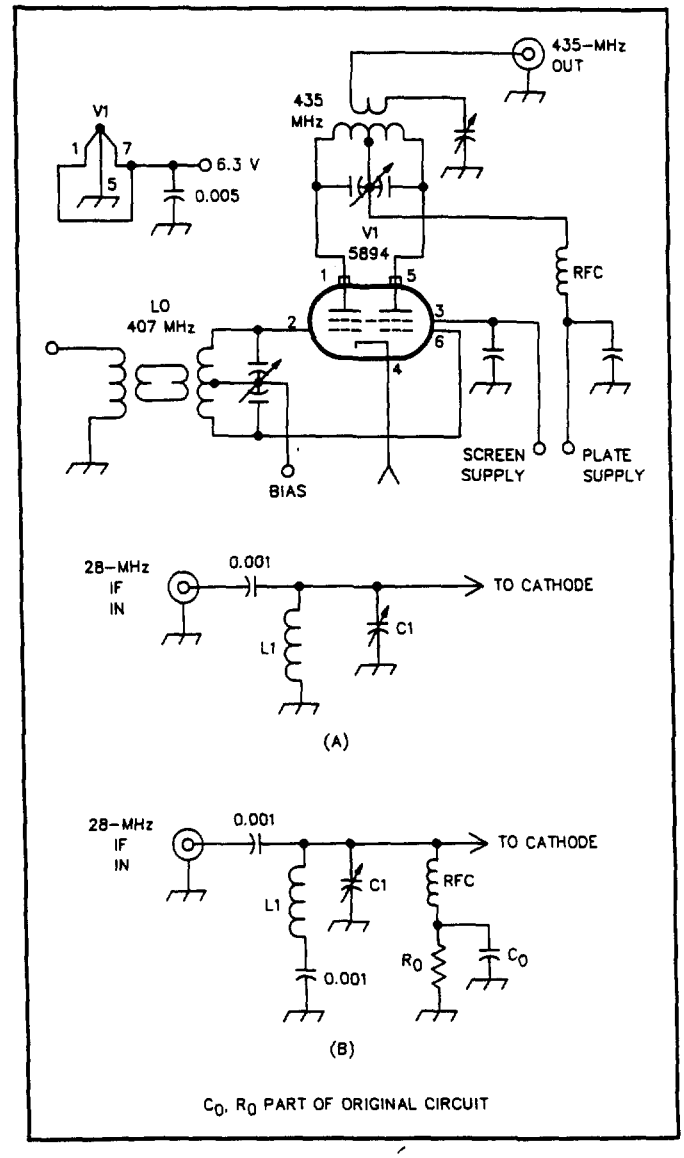

Fig 9-19—Partial schematic diagram of a 70-cm mixer, built from a converted FM transmitter. The original oscillator-multiplier-driver stages of the unit now provide LO injection. A filter should be used at the output of the mixer to prevent radiation of spurious products. See R. Stevenson, *QST*, Hints and Kinks, Mar 1976, p 40; and R. Stevenson, "SSB on Mode B, Using Modified FM Equipment," *AMSAT Newsletter*, Dec 1975, p 10. Reference: See 1990 *ARRL Handbook*, p 11-7.

Adding a receive converter to a transmit converter takes a minimal number of parts, since the local-oscillator signal is already available. A combined transmit/receive converter sharing a common local-oscillator chain is often called a *transverter*. However, many amateurs use the term transverter to refer to a transmit converter. When the distinction is important (like when you're purchasing one), make sure you know how the term is being used. Transverters designed for 145 and 435 MHz usually employ a 28-30 MHz IF. Units for 1269 MHz generally are designed to operate with a 145-MHz IF to minimize the need for

EXHIBIT F

Is Amateur Radio Hazardous to our Health?

What really was said about cancer rates and Amateur Radio, and what we can do about it.

By Ivan A. Shulman, MD, WC2S
6041 Cadillac Ave
Los Angeles, CA 90034

When it was reported in an Associated Press release that there was an increased rate of death due to certain types of cancer in Amateur Radio operators, this information was rapidly picked up by the radio community. As a physician who specializes in cancer surgery, I received many calls from amateur and non-amateur friends to find out more about what was going on and what I thought about it. As in many reports on medical topics in the lay literature and on television, there frequently is a difference between what is reported and what actually was said in medical articles, and this and other recent reports are no different.

After much time and consideration, several important concepts became apparent to me, and I hope that by making this report in *QST*, it will help us all to better understand what really was said, and what is known about the reported association of leukemias and other blood cancers with Amateur Radio. This article does not purport to completely cover all the important articles and research studies which have ever been written on the effects of electromagnetic radiation on human biology, but is instead, an effort to review that literature which might be useful to Amateur Radio operators interested in responding to the questions that have been asked.

Biologic Background

Radio-frequency waves are a form of electromagnetic waves, and in the frequencies of concern to Amateur Radio operators, these represent a form of nonionizing radiation. The terms ionizing and nonionizing radiation are frequently confused, and it is helpful to clarify what I mean by these terms early in our discussion.

Ionization occurs when there is enough energy in the radiation to displace an electron from an atom. Radiation that produces this effect has a very short wavelength, a high frequency and high energy level, and is typically that described as X-rays and gamma rays. Nonionizing radiation is otherwise known as infrared and radio-frequency waves, which are at a lower energy level, and have lower frequencies and longer wavelengths than ionizing radiation. Ionizing radiation is dangerous to living organisms in that it affects cellular elements such as DNA in the cell nucleus, leading to genetic damage in the individual cell, and mutations in future generations of cells. Although the energy level of nonionizing radiation is lower and thus may not affect large molecules or generate measurable amounts of heat in the same manner as ionizing radiation, there is substantial evidence that nonionizing radiation has subtle effects at a more basic cellular level, including effects on hormones, enzymes and the cooperative mechanisms involved in maintaining the integrity of intracellular systems.[1]

Experiments regarding the effects on human tissue of nonionizing electromagnetic fields have been conducted for many years.[2] The findings of these studies indicate that a modulated electromagnetic field, that is, one in which the energy is cycled on and off or is varied by intensity or frequency, has a greater inhibitory effect on the ability of cells in the body to communicate with each other than does a field in which the current remains at a steady and unmodulated strength.

Studies indicate that even in a weak electromagnetic field there is a modification of calcium binding at the cell membrane, as well as an alteration of a variety of calcium dependent enzyme systems which work between cells.[3] Experiments have noted that the effect on calcium flow in and out of cells is frequency dependent, and that curves can be drawn demonstrating these "frequency windows." Specifically, the combination of a very high or ultra high frequency carrier (147 or 450 MHz) modulated at specific extremely low frequencies (16, 40 or 60 Hz) has been studied and appears to be of biologic significance.[4]

Other studies have looked at the effects of electromagnetic energy on cells that have specific immune functions. An important type of white blood cell called a T-lymphocyte is involved in the recognition and destruction of foreign and malignant cells. There is evidence that the normal functioning of these cells is significantly reduced by electric fields that simulate 60-Hz high voltage power line fields and by weak microwave fields that are amplitude modulated at 60 Hz.[5,6] The mechanism of this process is not clear, but may also be related to interactions at the level of the cell membrane.

More rapidly dividing cells, such as those in the bone marrow or small intestine, are usually more sensitive to the effects of both ionizing and nonionizing radiation than are those which divide more slowly. Thus, it is rapidly dividing cells that are more likely to demonstrate changes in response to exposure to these types of energy. However, cells which divide more slowly have less of an ability to repair any damage done to them by exposure over a long period of time. It is important to recognize that these effects are not necessarily dependent on damage to DNA or other cellular markers.

Evidence at this time seems to suggest that an appropriate interpretation of this data is not that nonionizing energy necessarily causes cancer, but that it may act instead to promote the efficacy of other agents in doing so.

Previous Studies

In 1979, initial questions were raised regarding a positive relationship between high current electrical configurations in homes and the incidence of cancer deaths in children living in the Denver area.[7] Later, similar findings were noted for adults living near high current 60-Hz wiring as well.[8] Because of criticisms relating to the methodologies and assumptions used in these studies, other investigators looked at these same issues again, and came to similar conclusions.[9,10]

It had been reported as early as 1982 that there appeared to be an increased death rate due to leukemia in people who were exposed to magnetic and electric fields in the course of their work.[11,12] Additional articles appeared in 1983[13,14] and 1985[15-18] which also suggested that electrical workers in general were at an increased risk of leukemia and that electromagnetic fields might be a cause of this form of cancer. A time/effect relationship has also been suggested for certain forms of brain tumors and occupational exposure to microwave and radio-frequency electromagnetic radiation,[19,20] where the risk was 10 times as great in those workers who had industrial exposure to soldering fumes, solvents and a variety of other chemicals. Other reports have reviewed the possible relationship between spontaneous abortion rates and the use of electric blankets,[21] video display terminals,[22] and ceiling cable electric heat.[23] Cataract formation and damage to the retina has also been reported in humans exposed to high intensity electromagnetic fields and microwaves.[24]

Dr Milham's Study

The recent report which stirred up the most

[1]Notes appear on page 33.

concern because it made particular reference to Amateur Radio operators, appeared in the January 1988 issue of the *American Journal of Epidemiology*, a respected and prestigious medical publication.[25]

In 1982, Samuel Milham, Jr, MD, MPH, who works in the Epidemiology section of the Washington State Department of Social and Health Services, reported that a study of workers whose stated occupation on death certificate records suggested an exposure to electrical or magnetic fields had a higher rate due to leukemia.[26] In 1985, at the suggestion of an Amateur Radio operator (W2EVE), he looked at all the "Silent Keys" listings that appeared in *QST* and studied the cause of death of amateurs who died between the years 1971 and 1983 and who lived in Washington State and California at the time of their death.[27]

To simplify things slightly, only males were studied as there were very few women among these deaths. A total of 1691 death certificates were identified with these Silent Keys.

Using a standard statistical analytic technique called proportionate mortality radio (PMR), and an analysis of all US deaths as a comparison group, 12.6 of the 1691 amateurs should have died from leukemia. Instead, 24 deaths were observed with a statistical significance of $p < 0.01$, meaning that there was less than a 1 in 100 chance that this was a random occurrence.

In the largest study reported,[28] Milham has expanded on his original work. He first identified all licensed amateurs with addresses in California and Washington State. This was followed by a computerized and manual review of all deaths of persons whose complete names and date of births corresponded to the list of known amateurs for the period January 1, 1979 to June 16, 1984.

A total of 67,829 amateurs were identified and 2485 deaths were studied. Eighty-four percent (2083 of 2485) deaths occurred in California, so this study was weighted heavily towards the California experience. After making certain statistical adjustments, the overall death rate for amateurs was no different than it was for the population of both states at large. Likewise, the overall death rate for all forms of cancer among amateurs was not significantly different from the larger population.

However, within this cancer death rate, there was a definite disproportion of deaths due to cancers of "other" lymphatic tissues, such as multiple myeloma and non-Hodgkin's lymphomas. The death rate for all leukemias was only slightly, but not statistically significantly, increased. Among those leukemias, however, one form particularly (acute myelogenous leukemia) was significantly increased. It was concluded that the increased number of only these highly specific forms of blood disorders, and not others, suggests that a biologic cause and effect is present.

It was not possible to make a direct analysis of any occupational link with these excess deaths due to the fact that this information was readily available only for Washington State deaths. It should be noted that of these 402 deaths, 31 percent of the amateurs apparently worked in or about electromagnetic fields as technicians, radio operators or television repairmen. Of all deaths in Washington State during this time, only 3 percent of the population worked at these occupations.

In addition, among Washington State amateurs, 5 of the 11 deaths due to leukemias, lymphomas or multiple myeloma, were in people who had such occupational electromagnetic exposures. It was pointed out that workers in these occupations also were exposed to other possible hazards, such as fumes from solder and toxic chemicals such as the polychlorinated biphenyls (PCBs), and asbestos, any of which in themselves might conceivably cause cancer as well.

No other cause of death was noted to be higher than normal in the amateur population, and in fact, several important and common causes of death were less than what would be expected from the population as a whole. Deaths due to cancer of the pancreas and the lung, as well as all deaths due to respiratory diseases (pneumonia, asthma, emphysema), circulatory diseases (those of the heart and blood vessels) and accidents were less in amateurs as a group than in the overall population. It was even suggested that there are fewer cigarette smokers among members of the American Radio Relay League than in the general US population as a whole.

Milham concluded that Amateur Radio licensees in California and Washington State do have a higher death rate due to acute myelogenous leukemia, multiple myeloma and possibly other specific types of lymphoma. He felt that exposure to magnetic or electrical fields either as a consequence of work or hobby should be considered among the cause of these rates.

Comments on these Studies

It is important to recognize that studies based upon death certificate data alone are always subject to certain limitations. Data inaccuracies, from input as well as in coding, are not uncommon, and when one is measuring the incidence of small or rare occurrences, this may cause an inadvertent diminution or magnification of the determination of these occurrences. None of the studies discussed here look at an actual measurement of the electromagnetic or toxic chemical exposure that any of the deceased individuals may have had. The issue of what is called "confounding factors" such as the interaction of the effect of toxic chemicals and electromagnetic fields of different levels of energy is certainly unknown. As a result, statisticians may frequently differ on the interpretation of identical data.

On the basis of these research papers, however, it is now apparent that the data derived so far must be considered significant enough to support further research into both the epidemiology of and the biologic mechanisms involved in these effects. Some of that research is presently being done both in the United States and abroad and new articles are being published in the scientific literature frequently.

Exposure Standards

The question of exposure standards also deserves comment. In 1982, the American National Standards Institute (ANSI), a private, commercially sponsored organization, published a list of standards based upon the thermal effects of electromagnetic fields upon tissue.[29] There is much controversy regarding the validity of measuring this type of effect on biologic tissues as there is clear evidence that adverse tissue effects can occur without a detectable rise in temperature.[30] It should be noted that Australia, Sweden and the Eastern bloc countries as well as localities in the states of Oregon and Massachusetts have issued standards which recommend significantly lower exposure levels. Another voluntary standard has been proposed by the National Council for Radiation Protection and Measurement (NCRP), which is notably more stringent than the current ANSI standards.[31] ANSI is presently in the process of revising their standards.

It is interesting to note that the US Environmental Protection Agency has recently decided to defer the issuance of standards for exposure to electromagnetic fields under its RF Radiation Guidance Program for budgetary restrictions and other priorities. Despite the requests of the Federal Communication Commission, the National Association of Broadcasters, the Electromagnetic Energy Policy Alliance (of which the ARRL is a senior associate member) and other national organizations to complete this important work, the EPA has decided to put aside many years of effort on these guidelines and to focus its attention on other matters which it considers to be of greater public concern.

Hand-Held Radios

An article published recently studied the specific absorption rates in models of the human head exposed to hand-held radios operating in the 800-MHz band, which is where most cellular telephones are used.[32] The authors studied the RF energy absorbed by simulated tissues in the head (eye, brain, muscle, fat and bone) while holding the transmitter in vertical and tilted positions about the head. Also, a ½-wavelength antenna operated at 1.0 W power output was compared to a 5/8-wavelength antenna operated at 1.0 and 1.8 W. This study indicated the presence of a "hot spot" in the eye while using a ½-wavelength antenna, and one in the frontal portion of the brain while using a 5/8-wavelength antenna.

The authors concluded that if the transmitter is operated in a vertical position and is held at a distance of about 2 inches (5 cm) from the face during normal use, the specific absorption rates would not be significant enough to warrant concern, at least with reference to the present ANSI standards. These current ANSI standards essentially consider any device generating less than 7 watts output to be safe, an assumption with which almost all experts currently would not agree. Other studies using hand-helds operating at lower frequencies and different power outputs are being conducted and evaluated with refer-

ence to more stringent standards.

What Does This Mean?

What does all this really mean for us as amateurs? We all know that there are intrinsic risks in all activities that we do every day. How many of us still smoke, or are overweight or do not bother to fasten our seat belts in our cars? Knowing about risks only sometimes causes us to change our ways. As Amateur Radio operators we certainly do not have any hesitations about discussing and protecting ourselves from the dangers of high voltage circuitry. Nor do we shy away from trying to prevent the risk of accidental falls from roofs or antenna towers.

Likewise, we should recognize a relatively newly identified environmental hazard which may be significant to those of us even without occupational exposure to electromagnetic fields or toxic substances. No one is absolutely certain about what may be causing this increased proportion of special cancers. Therefore, prudence dictates that Amateur Radio operators should take those simple measures which decrease the possibility of our personal exposure to electromagnetic fields or toxics that we may contact as a consequence of our interest in Amateur Radio. Articles have been published in *QST* and other Amateur Radio publications regarding some precautions in the past.[33-37] This current list includes some recommendations which are new, particularly in view of recent information.

Preventive Measures

1) Do not stand or sit close to your power supplies or linear amplifiers while operating, even when they are in stand-by mode.

2) Stay at least 24 inches away from any power transformer, electrical fans or other source of high level 60-Hz magnetic fields while in operation.

3) Do not tune up or operate a high powered linear amplifier while the shields or covers are off.

4) Run your transmission lines away from where you or other people sit in or near your shack.

5) Properly terminated coaxial transmission feed lines should be used in preference to open-wire or end-fed antenna installations which come directly into the transmitter, as the RF radiated from a coaxial feed line is much lower.

6) Use common sense about placing all antennas well away from yourself and others, especially for VHF, UHF and particularly microwave applications. No one should be in the near field of an antenna.[38]

7) No person should be near any transmitting antenna while it is operating. This is especially true for all mobile or ground mounted vertical antennas. The use of indoor transmitting antennas which are close to people in a house or apartment should be reconsidered.

8) Use the minimal power needed to make a QSO, especially if the antenna is less than 35 feet above the ground.

9) Hand-held radios should be used on the lowest power setting needed to carry out communications.

10) Hand-helds should be kept as far from the head as possible when operating. The use of a separate microphone or similar device is recommended.

11) Transmissions using a hand-held radio should be kept as short as possible.

12) Power density measurements should be made before running more than 25 watts in a VHF mobile installation, particularly if the antenna is rear-deck mounted and passengers may ride in the back seat. The safest mobile antenna location is in the center of the metal roof.

13) The development of an accurate inexpensive power-density meter would be of major benefit to the Amateur Radio community so that RF power-density measurements could be taken in all radio installations. Because of the current high cost of such devices, groups of amateurs or clubs may wish to purchase one and share in its use.[39]

14) Soldering should only be done in a well ventilated area. A small fan should be used to blow away toxic fumes.

15) When using toxic chemicals, such as when etching PC boards or repairing fiberglass, wear gloves and goggles, use proper tools, and avoid contact with any of the chemicals. If accidentally contaminated, wash off the compounds immediately with copious quantities of water.[40] Again, the importance of always working in a well ventilated area with personal protective covering cannot be overemphasized.

16) Hazardous chemicals, such as those in the PCB class, are used in some capacitors and dummy loads. Use extreme care in handling these materials, and consult with the appropriate local authorities to determine the proper means of disposing of these chemicals in an environmentally responsible way.

Some Observations

To my knowledge, no other established guidelines are available to prevent potentially harmful exposure. Therefore until such time as a clearer picture emerges, we should follow these simple common sense precautions.

There is no question that additional information is needed and will ultimately be forthcoming on this important issue. This data will certainly be difficult to interpret, and confusing to many of us, both in the amateur and nonamateur community. We must therefore be prepared to work together to arrive at reasonable conclusions and appropriate actions.[41]

In preparing this paper, I personally communicated with several of these experts in the field whose works are referenced below. All of these experts, including Dr Milham, agreed that none of them would have any hesitation regarding their own personal use of currently available Amateur Radio equipment, provided that it was properly installed and operated, and that the recommended precautions were followed.[42] Unanimously, they all feel that no one should stop operating because of concern for the possible risk of illness, as these risks appear to be so relatively low.

Am I worried? Absolutely not. With common sense and safe operating practices, I look forward to many more years of enjoyment and satisfaction as an Amateur Radio operator.

Acknowledgments

The author wishes to thank those many individuals who provided encouragement, information, suggestions and were willing to offer multiple critiques of the numerous drafts of this article: W. Ross Adey, MD, (K6UI), Jim Cox (K7JAJ), Fried Heyn (WA6WZO), Thomas Mack, MD, MPH, Samuel Milham, MD, MPH, John Peters, MD, Tod Olson (KØTO), Wayne Overbeck, PhD (N6NB), David Rodman, MD (KN2M), Joseph Salvatore, MD (N1DJH), William Tallon (W6IPM).

An Amateur Radio operator continuously since 1963, Ivan Shulman says he was raised on Amateur Radio, and credits his late father W2SBX with getting him started. As a Fellow of the American College of Surgeons, Dr Shulman works as a general surgeon with a special interest in cancer of the thyroid, breast and gastrointestinal tract. In addition to his medical and radio activities, he has served as the physician for the Los Angeles Philharmonic on tours to Mexico, Japan, Korea and Europe. He also occasionally plays extra oboe with the orchestra as the need arises. When he manages to get on the air, he enjoys DX chasing and a good rag chew either DX on 20 meters or on UHF. In whatever spare time is left, he is busy introducing his wife and two young children to the ways of Amateur Radio.

Notes

[1]Adey W. R. Biological effects of radio frequency electromagnetic radiation. In: Lin J. C., ed. *Interaction of Electromagnetic Waves with Biological Systems.* New York: Plenum Press, 1988.

[2]Adey W. R. Tissue interactions with nonionizing electromagnetic fields. *Physiol Rev* 1981; 61:435-513.

[3]Adey W. R. Cell membranes: the electromagnetic environment and cancer promotion. *Neurochem Res* 1988;13:671-677.

[4]Byus C. V., Lundak R. L., Fletcher R. M., Adey W. R. Alterations in protein kinase activity following exposure of cultured human lymphocytes to modulated microwave fields. *Bioelectromagnetics* 1984;5:341-351.

[5]Lyle D. B., Ayotte R. D., Sheppard A. R., Adey W. R. Suppression of T-lymphocyte cytotoxicity following exposure to 60 Hz sinusoidal electric fields. *Bioelectromagnetics* 1988;9:303-313.

[6]Lyle D. B., Schechter P., Adey W. R., Lundak R. L. Suppression of T-lymphocyte cytotoxicity following exposure to sinusoidally amplitude-modulated fields. *Bioelectromagnetics* 1983;4:281-292.

[7]Wertheimer N., Leeper E. Electrical wiring configurations and childhood cancer. *Am J Epidemiol* 1979;109:273-284.

[8]Wertheimer N., Leeper E. Adult cancer related to electrical wires near the home. *Int J Epidemiol* 1982;11:345-355.

[9]Savitz D. A. Wachtel H., Barnes F. A., John E., Tvrdik J. G. Case-control study of childhood cancer and exposure to 60-Hz magnetic fields. *Am J Epidemiol* 1988;128:21-38.

[10]An in depth review of these articles and the controversies surrounding these topics written by Paul Brodeur was published in June 12, 19 and 26, 1989 issues of *The New Yorker* magazine.

[11]Milham S. Mortality from leukemia in workers exposed to electrical and magnetic fields. (Letter) *N Engl J Med* 1982;307:249.

[12]Wright W. E., Peters J. M., Mack T. M. Leukemia in workers exposed to electrical and magnetic fields. (Letter) *Lancet* 1982;2:1160-71.

[13]McDowall M. E. Leukemia in electrical workers in England and Wales. (Letter) *Lancet* 1983;1:246.

[14]Coleman M., Bell J., Skeet R. Leukemia incidence in electrical workers (Letter) *Lancet* 1983;1:982-983.

(continued on page 38)

find just where—in the vicinity of 18 MHz—I could find a match. To my surprise, a sharp dip occurred at 18.229 MHz, about 60 kHz above the upper band edge. Again, I clipped out the fixed capacitors, and found that the SWR dropped to less than 2:1 at 18.170 MHz, but climbed rapidly at any lower frequency.

At this point, I called in the big guns. I discussed the situation with Bill Fanckboner, W9INN (who has done some consulting work with MFJ on the tuner), and with the engineers at MFJ. There seemed to be no explanation for the phenomenon as all the tuners they checked operated normally at 17 meters.

Finally, Bill tried the same procedure I had, looking for resonance around the 18.1-MHz range. He found that several '986s in his shop displayed the same difficulty mine had, but just *outside* the band edges. After MFJ ran similar tests, Steve Pan, KF5C, of MFJ decided the problem was with the roller inductor in my unit. A new roller inductor was supplied immediately by MFJ, and the problem was solved!

The inductors used in the '986 tuners are not manufactured by MFJ. The company buys them from a contractor who builds them to MFJ's specifications. When I compared the two inductors I had, I initially could find absolutely no obvious differences between them. Both had the same number of wire turns of the same wire gage, on the cores of the same diameter. After careful inspection, however, I saw that the *spacing* or *pitch* of the wire turns at the low-inductance end of the coil was slightly different on each of the two inductors.

Because the wire is wound helically—not linearly—on the form, a minor shift in pitch at the low-inductance end of the coil will throw off the inductance/capacitance ratio just enough to create a barrier to proper tuning. When this occurs outside our bands, there is no problem. But when it occurs inside the band, it can be frustrating.—*Drayton Cooper, N4LBJ, PO Box 5, Bowling Green, SC 29703*

COAXIAL-CONNECTOR ALPHABET SOUP

☐ N, C, TNC, BNC, SMA—have you ever been bewildered by the alphabet soup of letters used to identify your coaxial connectors? Well, there are some interesting stories behind those letters.

Until the 1930s, binding posts and parallel wires were used for feed lines. When the first RF coaxial cables were marketed, the UHF connectors (PL-259 and SO-239) were introduced for these new feed lines.

During WW II, the requirements for a better connector for radar use prompted two designs. The first was developed at Bell Labs by Paul Neill and identified as the type N connector. At the same time, another connector was devised by Carl Concelman. Named the type C connector, it was the first designed as a true 50-ohm connector. By *reactive cancellation*, the inductance in the connector is balanced out by the dielectric material used to fill the connector. Reactive cancellation allows the connector to have a low SWR well into the GHz region.

Later, Neill and Concelman collaborated on the design of a miniature bayonet locking connector. This was dubbed the Bayonet Neill-Concelman or BNC connector. Some time after that, an improved, threaded version for airborne use was developed and called the Threaded Neill-Concelman or TNC connector. (Ever notice how easily a male N connector fits on a female BNC or TNC connector?)

For precision microwave use, a series of subminiature connectors were produced—A, B and C. Of these three, the A, or subminiature A (SMA), is the most popular. —*Kent Britain, WA5VJB, 1626 Vineyard, Grand Prairie, TX 75052*

[This information originally appeared in *QEX*, May 1985.—*Ed.*]

Note: All correspondence addressed to this column should bear the name, call sign and complete address of the sender. Please include a daytime telephone number at which you may be reached if necessary.

Feedback

☐ In "Sporadic-E Propagation at VHF," *QST*, April 1988, the formula in note 17 on p 39 should read:

$$d = 420\sqrt{\left(\frac{533f}{f_m}\right)^2 - 1}$$

where

d = path distance in km
f = working frequency in MHz
f_m = maximum usable frequency in MHz

☐ Dick Carey, W6GHD, has pointed out an error in "Power-FET Switches as RF Amplifiers," April 1989 *QST*. T2 in Fig 1 should be wound on an Amidon BN-43-302 balun core rather than the specified BN-43-3312, which is somewhat larger. Also, R1 mounts vertically on the PC board rather than flat, as shown in Fig 3.

Is Amateur Radio Hazardous to our Health?

(continued from page 33)

[15]Calle E. E., Savitz D. A. Leukemia in occupational groups with presumed exposure to electrical magnetic fields. (Letter) *N Eng J Med* 1985;313:1476-1477.

[16]Milham S. Silent keys: leukemia mortality in Amateur Radio operators (Letter) *Lancet* 1985;1:812.

[17]Milham S. Mortality in workers exposed to electromagnetic fields. *Environ Health Persp* 1985:62:297-300.

[18]Pearce N. E., Sheppard R. A., Howard J. K., Fraser J., Lilley B. M. Leukaemia in electrical workers in New Zealand. (Letter) *Lancet* 1985;1:811-2.

[19]Thomas T. L., Stolley P. D., Stemhagen A., Fontham E. T. H., et al. Brain tumor mortality risk among men with electrical and electronic jobs: a case-control study. *J Nat Ca Inst* 1987;79:233-238.

[20]Lin R. S., Dischinger P. C., Conde J., Farrell K. P. Occupational exposure to electromagnetic fields and the occurrence of brain tumors. An analysis of possible associations. *J Occ Med* 1985;27:413-419.

[21]Wertheimer N., Leeper E. Possible effects of electric blankets and heated waterbeds on fetal development. *Bioelectromagnetics* 1986;7: 13-22.

[22]Goldhaber M. K., Polen M. R., Hiatt R. A. The risk of miscarriage and birth defects among women who use visual display terminals during pregnancy. *Am J Indust Med* 1988;13:695-706.

[23]Wertheimer N., Leeper E. Fetal loss associated with two seasonal sources of electromagnetic field exposure. *Am J Epidemiol* 1989; 129:220-224.

[24]Rodman D. Personal communication.

[25]Milham S. Increased mortality in Amateur Radio operators due to lymphatic and hematopoetic malignancies. *Am J Epidemiol* 1988;127:50-54.

[26]See Note 11.

[27]See Note 16.

[28]See Note 25.

[29]ANSI. American national standard safety levels with respect to human exposure to radio frequency electromagnetic fields (300 kHz to 100 GHz) *ANSI C95-1*. New York, NY: IEEE, 1982.

[30]See Notes 1-3.

[31]NCRP. Biological effects and exposure criteria for radiofrequency electromagnetic fields. *NCRP report No. 86*. Bethesda, MD:1986.

[32]Cleveland R. F., Athey T. W. Specific absorption rate (SAR) in models of the human head exposed to hand-held UHF portable radios. *Bioelectromagnetics* 1989;10:173-186.

[33]The June and July 1978 issues of *QST* have several articles on the subject of radiation and chemical hazards in the shack. These include a discussion of the concepts of near field and far field power densities as well as the hazards of fiberglass catalysts.

[34]*The ARRL Handbook for the Radio Amateur*, 66th ed. p 37-2. Newington, CT: ARRL, 1988.

[35]Davidoff, M. *The Satellite Experimenter's Handbook*, 1st ed. Chapter 7:7-9. Newington, CT: ARRL 1984.

[36]*The ARRL Antenna Book*, 15th ed. Chapter 1:16-18. Newington, CT: ARRL, 1988.

[37]Davidson D. RF safety practice. In: *ARRL Microwave Book*, 1st ed. (in press). Newington, CT: ARRL.

[38]See Note 29.

[39]Power-density meters and probes are commercially available from Narda Microwave Corp (435 Moreland Rd, Hauppauge, NY 117788) and General Microwave Corp (5500 New Horizons Blvd, Amityville, NY 11701).

[40]See Note 29.

[41]US Congress. Office of Technology Assessment. *Biological Effects of Power Frequency Electric and Magnetic Fields—Background Paper. OTA-BP-E-53* (Washington, DC: US Government Printing Office, May 1989). This recent document, which was prepared at the request of Congress by the Department of Engineering and Public Policy of Carnegie Mellon University in Pittsburgh, discusses the present state of knowledge on the health effects of low frequency electric and magnetic fields. It also describes current US funding levels and research programs, and provides significant information on regulatory activity including existing and proposed field exposure standards. No doubt it will be considered to be a major governmental statement on the problems discussed here, and will be a standard reference for consideration in the future.

[42]Milham S. Personal communication.