BLOCK	DEFINITION
DIA	Disk Interface Adapter. Provides disk redundancy to Admin. Manager.
DTI	Digital Trunk Interface. PCM connection for all Trunks distributed.
LTM	Line/Trunk Manager. Controls processing status and flow control through the Switch.
LTP	Line/Trunk Processor. Performs Trunking supervision.
MCM	Mobile Call Manager. Controls overall cellular application.
MSU	Maintenance Status Unit. Provides visual cellular trunk status.
MTC	Magnetic Tape Controller. Controls tape operations and AMA storage.
MTF	Maintenance Test Frame. Performs automatic Maintenance on Cellular Trunks and demand maintenance of Land Trunking.
MUX	Multiplexer (Stage Switch). First and third stage Matrix switching.
PCMI	Pulse Code Modulation Interface. Path from Matrix to mobile, land and service circuits.
RCVR	Receiver Processor. Receives and interprets all incoming Multifrequency tones.
SCI	Status Control Interface. Controls visual cellular trunk status logic.
SCM	Status Control Manager. Maps status display requests to the SCI.
SFCC	Serial Four-Channel Communications Controller. Universal Data Multiplexer for cells and communication terminals.
SMI	Switch Matrix Interface. Provides PCM distribution to MUX.
SMM	Switch Matrix Manager. Controls incoming and outgoing call connections for Trunking.

BLOCK	DEFINITION
SMP	Switch Matrix Processor. Controls Matrix timing.
SMT	Switch Matrix Tester. Performs control maintenance status.
SNDR	Sender Processor. Provides outgoing signaling.
STG	Systems Timing Generator. Provides clock and framing timing.
SVM	Service Manager. Controls Service Circuit Processors.
TDC	Time of Day Clock. Administrative clock for system records.
TRP	Translator Processor. Performs translations and call treatment of outgoing and incoming calls.
TSI	Tme Slot Interchange. Switches data from any of 4096 inbound channels to any 4096 outbound channels.
TTP	Test Trunk Processor. Controls mobile rapid test channels.

of the switch decreases since the trunks must be divided to provide additional connections to the CSI switch.

For example, 10,000 subscribers using the phone for .02 Erlangs equals 200 Erlangs of traffic. Based on the Erlang B table, 235 trunks to the PSTN are required. Under the CSI proposal, assuming the 10,000 subscribers are divided into 7,500 carrier subscribers and 2,500 CSI subscribers, the carrier subscribers and the CSI subscribers will equal 150 and 50 erlangs of traffic, respectively. The carrier traffic to the PSTN will require 181 trunks and the CSI traffic will require 68 trunks to the CSI switch. The CSI proposal requires a total of 249 trunks, a net increase of 14 trunks, to carry the same volume of traffic.

Another example of trunking inefficiency will arise in connection with mobile to mobile calls as depicted in Figure A. Under the CSI concept, two additional trunk connections are required to complete mobile to mobile calls, resulting in an extremely inefficient network architecture. As mobile-to-mobile calls became more prevalent throughout the network, this double switching arrangement will likely result in increased customer complaints.

FIGURE A

GRAPHIC EXAMPLE OF TRUNKING INEFFICIENCY

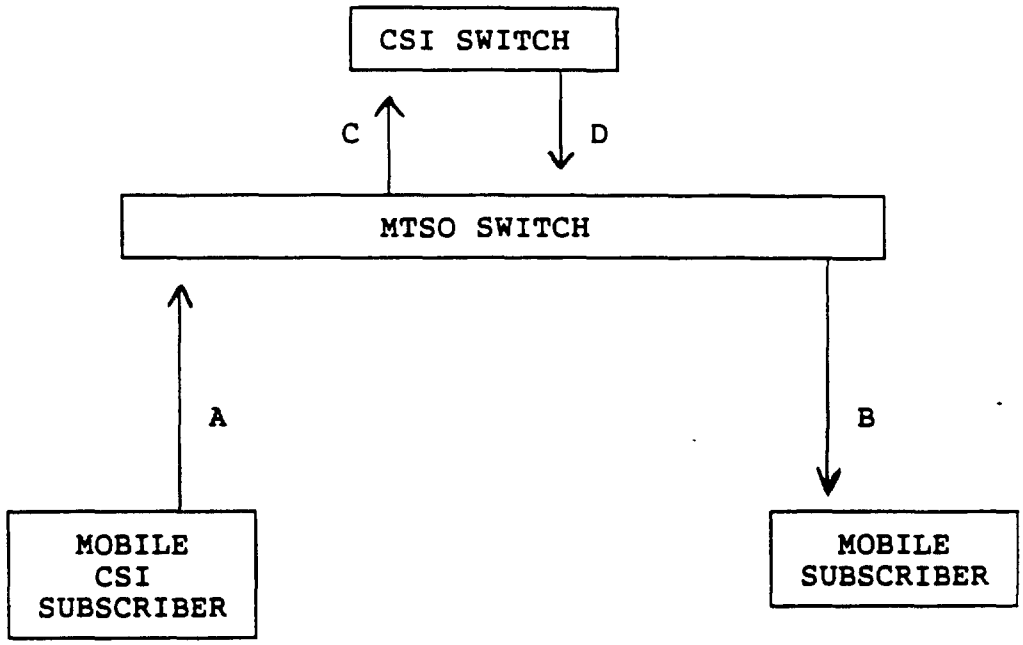

Currently a mobile-to-mobile call requires connections A and B. The interconnection with the CSI switch will require the addition of connections C and D.

In addition, the inclusion of the CSI reseller switch as an additional node in the cellular system network architecture increases the probability that a CSI customer will be unable to complete a call. CSI's customers will be forced to traverse a "choke" or "bottleneck" in the network, thus increasing the probability that their calls will encounter a faulty node with no available alternate route.

CSI call processing involving transmission through two switches and remote validation also will reduce network efficiency. The reseller switch will require additional processing by the carrier's switch since the increase in number of validation attempts will load the DMX links, potentially causing loss of validations, handoffs and call data. Additionally, delaying validation at the CSI switch needlessly utilizes system capacity in the event of fraud. The carrier switch will hold a call for a greater length of time due to remote validation.

11. Q: What impact will the reseller switch have on the consumer?

A: The reseller switch could impact negatively both the carrier's and CSI's customers. A major outage at the CSI switch could impact other network elements and interrupt service to the carrier's customers. For example, if the CSI switch erroneously seizes multiple trunks sending "off-hook" signals to the

cellular switch, the carrier's customers would experience, at a minimum, longer call set up time.

The reseller customer would experience a degradation in service in a variety of contexts. The quality of the voice transmission may be reduced as a result of the extended path for transmission of the call through the CSI switch. The CSI customer also would incur increased call set up time since each node in the network contributes to the overall call set up time, resulting in additional seconds.

In addition, there would be a longer response time in resolving customer disputes. Currently, when a mobile customer experiences problems connecting to the PSTN, the carrier contacts the LEC to locate the problem. With the addition of the reseller switch, the carrier first would determine the reseller affiliation of the subscriber and then contact the reseller switch to test the trunk group between the carrier and reseller switch. If the test does not reveal a problem, then the reseller would contact the LEC to determine the problem location. The carrier switch would maintain the overall trouble report and would be contacted with the final problem resolution. The response time is delayed with the addition of testing the trunks connecting to the reseller switch.

Finally, the additional node to the network will increase the CSI customer's costs as a result of the capital investment

costs of CSI, increased trunking requirements and call processing time and additional interconnection, administrative and maintenance costs incurred by the carrier in implementing the CSI concept.

12. Q: Putting to one side the issue of whether the CSI switch could offer services performed by the MTSO on a cost efficient basis, would the CSI switch offer services not otherwise available through the carrier switch?

A: No. Messrs. Midgley and Widmar mistakenly maintain that the reseller switch could offer optional features not presently available through the MTSOs.

Some of the services proposed by CSI are currently available. Services such as limited calling area are in fact currently available and offered by PacTel Cellular. Similarly, cellular PBX as defined by Mr. Widmar is nothing more than call forwarding and is available today.

Several of the services proposed by CSI are not feasible with existing technology. Incoming call screening, distinctive call signalling and priority call waiting would require the switch to have access to the calling party's phone number from the LEC. Such access relies on a protocol, System Signalling Seven ("SS7"), that is not currently available. When SS7 is available, the carriers will be able to offer such services.

However, the interconnection designed by Mr. Midgley will not support SS7.

Similarly, voice mail enhancements are not currently available. Motorola and several voice mail vendors are developing the required software modifications. This feature could be offered by carriers when it becomes available.

Finally, the dual system access proposed by CSI is not a switch function. The mobile unit can only switch between the A and B systems by manually programming the unit. The CSI switch would lack the automatic registration necessary to locate the mobile after it switched carriers.

CSI additionally proposes a variety of services that are not currently offered. PacTel Cellular does not believe that there is any current demand for these services and, to date, the resellers have never requested that PacTel Cellular offer any of the services they propose to offer.[9] If in fact, cellular end users demand such services in the future, such services could be offered via the MTSO. In sum, there is nothing inherent in the CSI switch which would permit it to offer services that would not be available on the MTSO.

---

9 Custom directory service and cellular secretary are labor intensive services. It is doubtful that the demand for such services in the cellular market, if any, would be sufficient to cover the cost. Similarly, cellular extension and multiline hunting could be offered if consumer demand warrants the required software modifications.

13. Q: Does this conclude your testimony?

A: Yes.

CERTIFICATE OF SERVICE

I, Tina L. Murray, hereby certify that copies of the foregoing "Opposition To Petitions For Reconsideration" of AirTouch Communications have been served by first class mail, postage prepaid, this 16th day of June 1994, on the following:

Joel H. Levy
William B. Wilhelm, Jr.
Cohn and Marks
1333 New Hampshire Ave., N.W.
Suite 600
Washington, D.C. 20036

Lewis J. Paper
David B. Jeppsen
Keck, Mahin & Cate
1201 New York Ave., N.W.
Washington, D.C. 20005

Larry A. Blosser
Donald J. Elardo
MCI Telecommunications Corp..
1801 Pennsylvania Ave., N.W.
Washington, D.C. 20006

Gail L. Polivy
GTE Service Corporation
1850 M Street, N.W.
Suite 1200
Washington, D.C. 20036

Howard J. Symons
Gregory A. Lewis
Kecia Boney
Mintz, Levin, Cohn, Ferris, Glovsky
and Popeo, P.C.
Suite 900
701 Pennsylvania Ave., N.W.
Washington, D.C. 20004

Mark J. Golden
Personal Communications Industry Assn.
1019 19th Street, N.W.
Suite 1100
Washington, D.C. 20036

Kathleen H. Burgess
NYS Department of Public Service
Three Empire State Plaza
Albany, NY 12223

Maureen A. Scott
Veronica A. Smith
John F. Povilaitis
Commonwealth of Pennsylvania
Pennsylvania Public Utility Commission
P.O. Box 3265
Harrisburg, PA 17105-3265

Gregg P. Skall
Pepper & Corazzini
1776 K Street, N.W.
Suite 200
Washington, D.C. 20554

Frank Michael Panek
Ameritech
2000 West Ameritech Center Dr.
Hoffman Estates, IL 60196

James L. Wurtz
Pacific Bell
1275 Pennsylvania Ave., N.W.
Washington, D.C. 20004

Martin W. Bercovici
Keller and Heckman
1001 G Street, N.W.
Suite 500 West
Washington, D.C. 20001

Elizabeth R. Sachs
Lukas, McGowan, Nace & Gutierrez
1819 H Street, N.W., Ste. 700
Washington, D.C. 20006

Paul Rodgers
Charles D. Gray
James Bradford Ramsay
National Association of Regulatory Utility Commissioners
1102 ICC Building
Post Office Box 684
Washington, D.C. 20044

James P. Tuthill
Lucille M. Mates
Betsy S. Granger
Pacific Bell
140 New Montgomery St., Rm. 1525
San Francisco, CA 94105

Phillip L. Spector
Susan E. Ryan
Paul, Weiss, Rifkind, Wharton & Garrison
1615 L Street, N.W.
Suite 1300
Washington, D.C. 20036

Tina L. Murray

Tina L. Murray