PCIA Personal Communications Industry Association

DOCKET FILE COPY ORIGINAL

EX PARTE OR LATE FILED

RECEIVED
JUL 5 1994
FEDERAL COMMUNICATIONS COMMISSION
OFFICE OF SECRETARY

July 1, 1994

William F. Caton
Acting Secretary
Federal Communications Commission
Room 222
1919 M Street, N. W.
Washington, D. C. 20554

RE: GEN Docket 90-314: *Amendment of The Commission's Rules to Establish New Personal Communication Services*

Ex parte

Dear Mr. Caton:

At Dr. Stanley's request, the Personal Communications Industry Association (PCIA) has prepared and delivered to him an Emergency Access position paper developed by PCIA, the Association of Public Safety Communications Officers, the National Emergency Number Association and the National Association of State Nine One One Administrators.

An original and copy of the position paper and cover letter is attached.

Sincerely yours,

Mark J. Golden, CAE
Acting President

No. of Copies rec'd 0+1
List ABCDE

1019 Nineteenth Street, NW • Suite 1100 • Washington, DC 20036-5105 • Tel: 202-467-4770 Fax: 202-467-6987

PCIA Personal Communications Industry Association

RECEIVED

JUL 5 1994

FEDERAL COMMUNICATIONS COMMISSION
OFFICE OF SECRETARY

June 30, 1994

Dr. Thomas Stanley
Chief, OET
Federal Communications Commission
Room 7002
2025 M. Street, NW
Washington, DC 20554

Dear Dr. Stanley:

On behalf of APCO, the Associated Public Safety Commissions Official; NENA, the 911 Emergency Number Association; NASNA, the National Assocation of State 911 Administrators; and the Personal Communciations Industry Association (PCIA), we are pleased to respond to your request for the first completed version of our POSITION PAPER ON EMERGENCY ACCESS SERVICES. This document has gone through many revisions to culminate in a cooperative work effort over 7 months between the emerging PCS service provider community, represented by PCIA and the Emergency Access Service provider industry, represented by APCO, NENA and NASNA.

Our mutual intent in formulating this paper was to provide a consensus document to standards bodies that clearly outlined service requirements for emergency access networks and to urge standards bodies and manufacturers to develop the features listed herein. We have a broader intent in mind as well: to build a cooperative approach to incorporate emergency access services into wireless networks in the future, and try to preempt a "polarization" of positions on emergency access.

It should be noted that we had to "agree to disagree" on several issues. The most noticable issue was when we could reasonably expect economical deployment of position location capabilities to support E911 in a wireless environment. The emergency access community believes that establishment of a date is important to put forward a benchmark and a goal for the providers to obtain. The E911 community believes that it is also of utmost concern that the location technologies be included as quickly as possible with the development of new wireless services. The PCS community feels strongly that since these new technologies still do not exist and have not been defined for digital wireless systems, a suggested date would be arbitrary and unreliable. The PCS community is also concerned that it would not encourage economic technology development. In addition, the paper also does not address some grade of service issues.

1019 Nineteenth Street, NW • Suite 1100 • Washington, DC 20036-5105 • Tel: 202-467-4770 Fax: 202-467-6987

Despite the disagreement on the above points, the good news is that the attached position paper does outline actions that can be taken to support emergency access service requirements. The service requirements will be advanced in the appropriate standards setting bodies. It is our intent, as a group, to move forward believing both communities still have plenty of work to do to create an economic and technical cooperative standard for 911 service in a wireless environment. We intend to keep ongoing negotiations in place.

We would like to ask that this letter be included as an appendix to the document so that we have all the issues covered, including those that we did not come to final agreement on. We will keep the Commission apprised of our progress. Thank you for the opportunity to submit this document.

Sincerely,

Mark Golden
Acting President

cc: Ms. Thera Bradshaw, President, NENA
Ms. Mary Boyd, President, NASNA
Mr. Steven Proctor, President, APCO

PCIA, APCO, NENA and NASNA
Emergency Access
Position Paper

This paper presents a jointly developed position of PCIA, APCO, NENA and NASNA organizations to assist standards bodies in their development of appropriate standards for the implementation of access to emergency services from wireless communications systems via 9-1-1 type systems. It is the result of a joint analysis and an effort to resolve challenges to both the public safety as well as the wireless manufacturers and service provider communities. All participants in this effort have a desire to maximize the ability of using wireless access to facilitate rapid and effective contact with emergency services, when and where needed.

However, each group has a unique set of challenges to consider. The public safety organizations and their membership have an imbedded infrastructure base that they wish to guard against obsolescence. Wireless access implementations need to consider the ability to locate 9-1-1 callers and interwork with existing emergency service bureau systems, to guard against this obsolescence. The wireless manufacturers and service providers have economic and technological targets that must be met or new services such as Personal Communications Services (PCS) will, at best, be stymied or may never be launched.

The positions and requirements expounded here represent an effort to address the concerns of all participants. These recommendations (requirements) will be submitted as contributions

to the appropriate standards organizations for definition and adoption.

Introduction

This joint document has been prepared and is presented by the Personal Communications Industry Association (PCIA), the Association of Public Safety Communications Officials-International, Inc. (APCO), the National Emergency Number Association (NENA) and the National Association of State Nine One One Administrators (NASNA). A description of each organization is contained in Appendix A.

Discussion

The basic 9-1-1 (9-1-1) and Enhanced 9-1-1 (E9-1-1) systems in existence today have been designed to provide rapid response to calls for emergency services from landline subscribers. Existing basic 9-1-1 emergency services systems establish routing of calls to a Public Safety Answering Point (PSAP). E9-1-1 provides added capabilities including selective routing of a call to the appropriate PSAP for quick response to emergency calls, display of calling number, address and, in most cases, the name of the subscriber at the calling number. However, these systems may not address the particular and unique requirements of wireless communications environments. Appendix B defines emergency service call taker information and feature priorities for both wireline and wireless systems.

The mobile nature of wireless services and the unique qualities of Radio Frequency (RF) propagation may require adaptation of

existing emergency services systems and development of special location capabilities in wireless systems.

Emergency services access (9-1-1/E9-1-1) in a wireless environment needs the capability to identify the location of the radio port or cell site (or sector if sectored) serving the calling party. This level of location identification will provide information to assist in routing the call to the proper PSAP and serve as a beginning point from which more precise user location capabilities can be developed, as technology and economics allow.

The wireless user may be reporting an emergency while mobile and may be some distance away from the emergency when the call is completed. The call-taker will still need to verify the caller's location. This situation exists today for the wireline 9-1-1 callers because they may be reporting from a location remote from the incident. Modifications to many of the existing emergency services systems will be necessary to provide both location and call back number.

New and developing wireless services, particularly PCS, will have new signaling platforms and protocols which might not be compatible with the existing information retrieval capabilities of the current emergency services systems. An additional challenge for interconnection of wireless telephone systems and emergency services systems will be to not substantially modify PSAP call taker procedures. The end user (PSAP call taker) processes should be similar to existing processes even though some infrastructure changes (such as signaling and data interfaces) may be necessary.

Requirements

Currently wireless systems communicate with a number of emergency service entities. These include basic 9-1-1 systems, enhanced 9-1-1 systems, police dispatchers, etc. The following requirements deal with wireless access to 9-1-1 - type systems. These requirements do not necessarily apply to wireless access to non-9-1-1 type systems.

1. 9-1-1 Availability

A user should have the ability to reach emergency services from any service initialized[1] wireless handset in a home service area or subscribed-to roamed service area by dialing the three digit number 9-1-1. No additional dialing digit sequence should be required to reach emergency services[2]. In addition, dialing 9-1-1 must override any lockout requirement for the handset or wireless terminal. Any handset that is service initialized on a wireless network must be allowed to make a 9-1-1 call, without a requirement for user validation.

2. Grade of Service

End to end grade of service objectives for wireless emergency access may involve several systems. Initiation of a wireless emergency access call will involve a wireless access system. Interconnection of the caller with a public safety call taker may involve interconnecting networks (e. g. PSTN) and termination of

---

[1] Service Initialized means that the owner has purchased services from a wireless service provider.

[2] This requirement does not preclude the implementation of an "emergency button" on the handset or the use of voice recognition to invoke the request for emergency access.

the call will involve the PSAP systems. Hence an overall grade of service objective, between a person in distress and a call taker, will require a cooperative effort between these initiation, interconnection, and termination systems. Proportioning grades of service within each system to reach overall objectives will need to be agreed upon locally and comply with appropriate local regulations.

Grades of service within each system will be established utilizing appropriate engineering and economic guidelines and are not areas subject for standardization.

Portions of the network used for emergency access may be the same for both wireline and wireless implementations. In some wireless implementations, a completely separate network may be used. In this instance, there could be a direct path from the wireless network to the Selective Router (S/R) or the PSAP. In other implementations, some portion of a LEC-based wireline network might be used to access the S/R or PSAP.

The following figure is an example of one network implementation and does not imply any particular ownership of the various network elements.

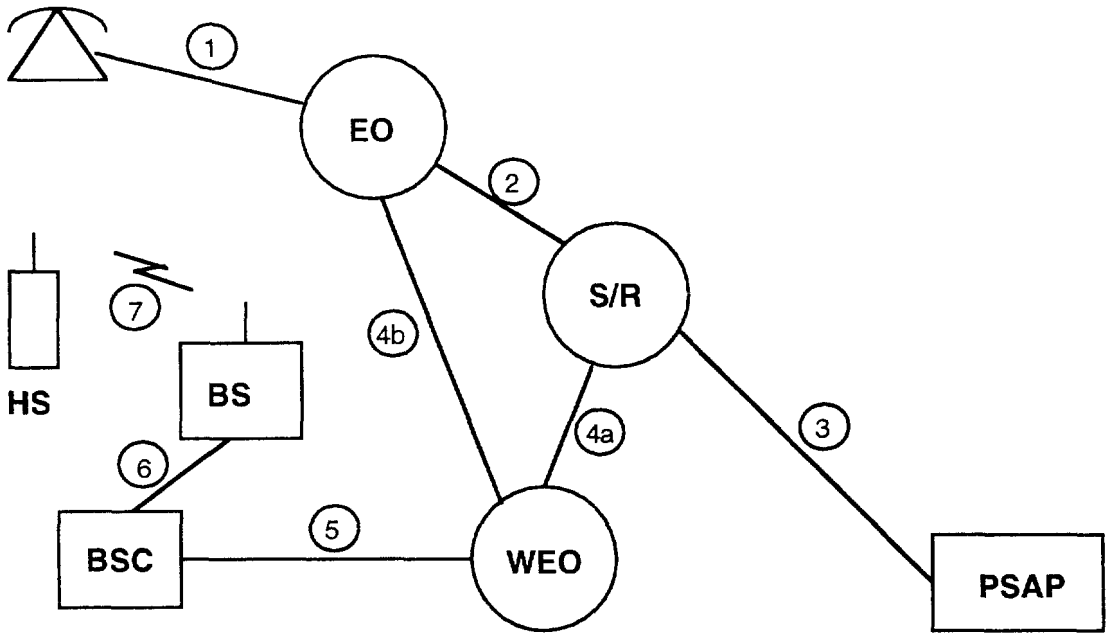

EO - end office (e.g., Class 5) **S/R** - selective router

HS - handset **BS** - base station

BSC - base station controller **WEO** - wireless end office

PSAP - public safety answering point

Link 1, between a wired telephone and an end office, is currently designed for a specified quality of service. This design is for minimum quality of service standard, and is typically specified by a State Public Utility Commission (PUC) and is not specifically designed for the requirements of emergency access. Links 7, 6 and 5 in a wireless system are analogous to link 1 in a wireline application, in that they are both the access path to an end office switch. Link 7 is

the radio path between the wireless terminal to the base station. Links 6 and 5 are generally designed to carry as much traffic as is generated over the radio links, in order to minimize call blocking. The driving force for the grade of service design for these links is the competitive environment in which wireless access services will exist. This necessity to compete in an area serviced by as many as 6 PCS, 2 cellular, 1 Enhanced Specialized Mobile Radio (ESMR) licensees and perhaps multiple local exchange carriers will prompt each service provider to maintain a grade of service high enough to keep customers (i.e., minimize blocking).

Links 2 and 3 however, may be interswitch trunks, whether dedicated or virtual, to emergency access and may be designed to a P.01 grade of service or to a grade of service negotiated and agreed upon by the 9-1-1 Delivery Provider[3] and the 9-1-1 Service Provider[4]. Implementations of links 4a/b should be designed to support the overall end to end grade of service objectives. These interswitch facilities could be used by either a wired or wireless access implementation.

A concern of this group is that the vagaries of marketing forces driving technical solutions may not, however, satisfy the emergency access and public use expectations.

Therefore, this group recommends that, for further consideration, the standards bodies developing radio standards investigate the feasibility of specifying technical solutions or strategies to minimize blocking of wireless 9-1-1 calls, from the radio

[3] Owner or provisioner of the S/R and the delivery facilities
[4] Owner or provisioner of the PSAP

system side of the network. Examples of issues to consider on the radio side might include load shedding, forced handoffs where existing calls can be maintained, etc. Issues for the public safety community to consider might include to use of advanced features such as Automatic Call Distribution (ACD) and Voice Response Units (VRU) to minimize blocking during overload conditions.

3. 9-1-1 Call Priority

An originating 9-1-1 call should have priority over other non-emergency services calls. This priority should extend to placing the 9-1-1 call at the beginning of a queue for calls waiting to be placed, if no radio or network resources are available. Because of the unknown nature or importance of calls in progress (i.e., a call to a suicide hotline or a poison control center), this priority requirement should not be interpreted to mean preempting or "bumping" a call in progress.

4. User Location Information

The wireless system should have the ability to identify the location of a wireless terminal used to make a 9-1-1 call. This location information shall be used to: (1) route a 9-1-1 call to the proper PSAP, based on the location of the base station to which that wireless handset is communicating and (2) provide the location of a terminal to the public safety call taker. Due to the concerns, both technical and financial, expressed by manufacturers and potential wireless service providers, a migration path for caller location is proposed. This migration path would start with a requirement for the location of the base station to which that wireless handset was

communicating and progress towards the ability to locate an individual wireless handset in a three-dimensional environment, as location technology and the cost of implementing such a technology become attainable. Technological advancements have indicated that the future may provide public safety with the ability to receive a high level of location accuracy from a wireless device.

It is the recommendation of this group that the standards bodies developing radio standards investigate the feasibility of specifying technical solutions or strategies to implement economically feasible detailed location capabilities at the call origination position and to make those capabilities available as soon as possible. Consideration should be given to both rural and urban environmental locational challenges and determine if a minimum geographic location accuracy within 400 feet could be achieved both technically and economically. A much higher level of location accuracy should be considered in urban environments where it will be necessary to determine the precise location of a caller within a multi-story structure.

5. Re-ring/Call back

The wireless system should have the ability of the emergency services call taker to reconnect, or call back the wireless handset if the call is disconnected or terminated prior to the finalization of the event. It should be noted that the group agreed that this requirement assumes the handset can receive the call back.

6. Information Elements Required in SS7 or ISDN-like Signaling

Future implementations of wireless systems and 9-1-1 type systems should be capable of providing a minimum number of information elements to the PSAP. The elements may include:

- Call back number and the handset subscriber's name
- Location of call origination, as discussed in section 4
- Class of service (e.g., residence, business, etc.)
- Wireless provider's name and telephone number
- Priority of the caller (e.g., hospital, school, etc.)
- Routing information to direct the call to the proper PSAP (Primary and Secondary PSAP identifiers)
- Transfer numbers - separate numbers to allow hot-key transfer of calls to police, fire and ambulance

7. Telephone Devices for the Deaf (TDD) Access

The wireless system should allow disabled individuals to access emergency services through means other than traditional wireless voice handsets (i.e., a TDD-like data device for the hearing impaired, etc.). To facilitate this requirement, there should be TDD-capable wireless devices but this does not impose a requirement that all wireless devices be TDD-capable.

It should be noted that new wireless systems will have a digital data capability. This capability will allow wireless users to communicate via data, without the use of traditional voiceband facilities. This capability must be accommodated in the PSAP, in order to serve the widest universe of the public.

8. Future Requirements

This document raises the need for additional work on a number of details concerning requirements and needs for future emergency access. The FCC and standards bodies, among others, should develop or request the development of detailed requirements, cost analyses and possible solutions.

Appendix A

The Personal Communications Industry Association (PCIA), formerly Telocator, is a trade association representing more than 450 companies including PCS experimental licensees and entrepreneurs, paging, cellular, cable, manufacturing, computer, mobile data, SMR, local exchange and interexchange sectors of the industry.

Established in 1949, PCIA has been instrumental in advancing regulatory policies, legislation and technological standards that have helped make the communications revolution possible. One of PCIA's greatest strengths is its ability to foster and represent consensus in order to advance the interests of the wireless industry.

The Association of Public Safety Communications Officials-International, Inc. (APCO) is the world's oldest and largest not-for-profit professional organization dedicated to the enhancement of public safety communications. Members come from every type of public safety organization imaginable, from 9-1-1 centers and public safety departments which include police, fire, highway maintenance, corrections, forestry, emergency medical services and local government.

With more than 10,000 members worldwide, APCO International exists to serve the people who manage, operate, maintain and supply the communications systems used to safeguard the lives and property of citizens everywhere.

The National Emergency Number Association (NENA) was established in 1982 as a not-for-profit in order to further the goal of "One Nation...One Number." NENA's mission is to foster the technological advancement, availability and implementation of a universal emergency telephone number system. In carrying out its mission, NENA promotes research, planning, training and education. The protection of human life, the preservation of property, and the maintenance of general community security are among NENA's objectives.

The National Association of State Nine One One Administrators (NASNA) is an organization of state officials whose purpose includes:

- Promoting information sharing amongst those states with programs dedicated to implementing 9-1-1 emergency telephone systems;
- Assisting other states with resolving issues necessary to accomplish statewide implementation and maintenance;
- Encouraging the establishment of a coordination person within each state or province;
- Identifying and recommending minimum standards for 9-1-1 emergency telephone systems;
- Identifying and recommending appropriate legislation or rules concerning the administration of statewide 9-1-1 emergency telephone system programs and;
- Serving as a knowledge resource for fulfilling the purposes described herein.

Appendix B

9-1-1 Call Taker Feature Priority

This appendix identifies 9-1-1 call features currently available to many emergency call taking organizations, listed in order of importance as defined by NENA/APCO leadership. The availability of these features enables more timely arrival of public safety personnel, minimizing loss of life and property. The list is provided to promote a better understanding of call feature value as related to emergency response capability.

1. Ability to reach emergency services by dialing 9-1-1
2. Ability to permit call precedence for 9-1-1 over other call types
3. Ability to identify caller's geographic location
4. Ability to hear and determine the type of emergency services needed
5. Ability to receive 9-1-1 calls within their jurisdiction (Selective Routing)
6. Ability to detect and communicate with TDD and data callers
7. Ability to hold the line for trace, after the caller has disconnected (Called Party Hold), or the ability to call back.
8. Ability to call the caller back after disconnection and/or perform re-ring with the called party held
9. Ability to transfer the caller to the appropriate PSAP
10. Ability to transfer the information screen to the appropriate PSAP
11. Ability to force disconnect, regardless of the caller switch hook status