53. Common Channel Signaling. The Joint Paper concludes that radio transmissions of 911 calls eventually should be capable of providing the same or similar information and features currently available from wireline calls over enhanced 911 systems. In addition to the ALI and call back information discussed above, the adoption of this performance criterion would require providers to ensure that some or all of the following information is furnished to the PSAP:

- Call back number and the mobile transmitter subscriber's name
- Location of call origination (ALI), as discussed above
- Class of service, e.g., residence, business, etc.
- Base station provider's name and telephone number
- Priority of the caller, e.g., hospital, school, etc.
- Routing information to direct the call to the proper PSAP (primary and secondary PSAP identifiers)
- Transfer numbers, i.e., separate numbers to allow transfer of calls to police, fire and ambulance services

We request comment on the feasibility of these features, which would permit radio transmission systems to interface fully with enhanced 911 systems. We also propose to require that common channel signalling capabilities be implemented within three years after the effective date of the order adopting rules in this proceeding, and we request comment on this proposal and timetable. In addition, we seek comment on whether the reliability of 911 technology will be hampered if 911 services are transferred to common channel signaling, and on how these features would affect the survivability of 911 SS7 based calls during a common channel signaling outage. We note that the Network Reliability Council has recommended that, before 9-1-1 calls are handled by SS7, standards bodies must determine whether additional standards are needed for SS7 protocol.[54]

54. Access to text telephone devices (TTY). We propose that, within one year of the effective date of the order adopting rules in this proceeding, radio services must be capable of permitting access by individuals with speech or hearing disabilities through means other than mobile radio handsets, e.g., through the use of a TTY device. To the extent radio services are accessible to TTY devices today, those services will be able to provide access to 911 service.[55] It is not clear from

---

[54] Network Reliability: A Report to the Nation, Federal Communications Commission's Network Reliability Council, June 1993, Section F, page 16.

[55] Title II of the Americans with Disabilities Act (ADA) requires direct access between TTY users and PSAPs. See 42 U.S.C. Section 12131 et. seq. Under the ADA, all public utilities that provide telephone emergency services -- 911 access -- were

the Joint Paper or the record what Commission rules or policies would be necessary or appropriate to ensure access to 911 services for TTY-like devices beyond the general requirement that services be compatible with such devices. We seek comment on how to ensure access to 911 service by TTY-type devices that use wireless services, and request comment on the specific additional features, costs and feasibility issues that may be relevant to achieving compatibility.

55. Equipment Manufacture, Importation, and Labeling. We seek comment on an approach that would permit wireless providers to employ whatever technologies achieve the required objectives. Features such as ANI and ALI might be implemented in a variety of ways. For example, while we anticipate that mobile equipment would generally need to include equipment to determine and transmit location information, it is feasible that other methods may be used, such as the type of technology described by KSI, that do not require such features to be included in the mobile transmitter. Nevertheless, we solicit comments as to whether it may be necessary to establish specific requirements for base and mobile transmitters to ensure compliance with the objectives of this proceeding, particularly with regard to ANI and ALI. Further, we request information as to what those standards should be. If specific requirements for transmitters are necessary, we contemplate requiring the submittal of information demonstrating compliance as part of the equipment authorization process. We also invite comment as to whether it may be appropriate to establish cut-off dates for manufacture, importation and marketing of equipment that may not meet the standards and how much time should be allowed for transitions to equipment that meets the new requirements. Comments are requested as to whether it may be appropriate, within 30 days after the effective date of the order adopting rules in this proceeding, to require equipment that does not meet the proposed requirements to be labelled with the following statement on the device and on the outside of the packaging in which it is marketed:

> You may use this transmitter to dial for help through 911. The person answering may not know where you are, or how to call you back, unless you accurately provide your location and your full telephone number, including area and/or roaming codes.

V. ADDITIONAL CONSIDERATIONS

---

required to be accessible to people with hearing and speech disabilities by January 26, 1992. Section 35.162 of the Department of Justice regulations implementing Title II of the ADA requires "direct access" to telephone emergency services.

56. Privacy. We seek comment on the necessity for, and implications of, imposing privacy requirements on information transmitted to local exchange carriers and PSAPs in the delivery of 911 emergency services. In adopting federal rules for carriers that provide calling number identification services, the Commission declined to apply privacy protection requirements in circumstances which did not appear to raise serious privacy implications, including calls within private systems and calls to emergency service providers.[56]

57. The states, however, have adopted varying approaches to the privacy afforded a subscriber's name, address, and telephone number when that information is used in the delivery of emergency services. For example, Florida, Georgia and Iowa prohibit the release of information, other than the name, address, and telephone number of the caller, obtained in the delivery of emergency services. Iowa, South Dakota, and Wyoming waive state privacy requirements for nonpublished numbers for the purpose of delivering emergency services. We note that while the provision of emergency services is essentially local in nature, the use of mobile radio transmitters to place 911 calls may involve emergency service providers located in more than one jurisdiction. Moreover, there is an important national interest in preserving uniform accessibility to 911 services. We ask commenters to address whether there are privacy interests in information transmitted by wireless service providers pursuant to the delivery of emergency services, and if so, what specific measures are appropriate to protect those interest.

58. Compatibility with Network Services. We ask whether other steps need to be taken to ensure the American public continues to have access to effective 911 services. For example, private network services offered by telephone companies are not accessible simply by dialing 911. Instead, as with PBXs, an initial "9" first must be dialed. We ask parties to comment on whether rules should be adopted to require such services to permit access simply by dialing 911. In addition, it appears that not all telephone companies provide priority for 911 calls in accessing the central office switch, prior to being sent to the 911 tandem. We seek comments on whether we should impose uniform requirements. Commenters should discuss any jurisdictional issues that might be raised by imposition of such standards.

59. Preemption. We believe that our proposed rules imposing uniform requirements for compatibility of enhanced 911 systems with wireline equipment and wireless services are

---

[56] See Report and Order and Further Notice of Proposed Rulemaking, CC Dkt. No. 91-281, 9 FCC Rcd 1764 (1994).

consistent with our responsibilities under Section 1 of the Communications Act to promote safety of life and property. The Commission has the authority to preempt state regulation that affects interstate service when it is not possible to separate the interstate and intrastate components of the service, or when state regulation thwarts or impedes a federal policy.[57] We seek comment on any potential conflicts between our proposed rules and existing state regulation affecting PBX equipment or wireless services.[58] Commenters opposing preemption should suggest specific alternatives for ensuring that inconsistent federal, state, and local requirements do not thwart the nationwide goal of achieving compatibility with enhanced 911 systems.

VI. CONCLUSION

60. For the reasons set forth above, we seek comment on all aspects of this Notice of Proposed Rulemaking and the specific proposed rules set forth in Appendix C. Our objective is to ensure that the American public continues to have access to effective 911 services. In the Notice of Proposed Rulemaking, we propose rules to ensure compatibility of PBX equipment with Enhanced 911 systems, including procedures for verifying that the location of callers using PBX equipment is received at the appropriate public safety answering point. We seek comment on whether these proposals permit sufficient flexibility in conforming PBX equipment to the needs of their owners while ensuring that the locations of callers to 9-1-1 are properly identified to PSAP operators. In addition, we seek comment on proposals that wireless service providers ensure that mobile radio units supplied to their customers provide the same level of access to 911 emergency services as is generally available to wireline customers. We request comment on the technical and economic feasibility of making wireless services compatible with enhanced 911 services, and on whether wireless service providers should implement the following features: 911 access

---

[57] Louisiana Public Service Commission v. FCC, 476 U.S. 355, 375 n.4 (1986); Illinois Bell Tel. Co. v. FCC, 833 F.2d 104 (D.C. Cir. 1989); California v. FCC, 905 F.2d 1217 (9th Cir. 1990); Texas Public Utility Comm'n v. FCC, 886 F.2d 1325 (D.C. Cir. 1989); North Carolina Utilities Comm'n v. FCC, 552 F.2d 1036 (4th Cir.), cert. denied, 434 U.S. 874 (1977); North Carolina Utilities Comm'n v. FCC, 537 F.2d 787 (4th Cir.), cert. denied, 429 U.S. 1027 (1976). See also CMRS Order, 9 FCC Rcd at 1506 & n.515.

[58] For example, the State of Washington adopted legislation in March, 1994 requiring cellular (or wireless) companies to provide ANI data for PSAP use. "Cellular Taxation for 9-1-1 in Washington State, House Bill 2601," NENA News, May 1994, pp. 32-34.

communicating call origination information; providing priority handling of 911 calls; and forwarding sufficient information to the 911 exchange to provide call back capability, location information, and determination of the type of emergency service needed. We seek comment on whether or what privacy considerations should apply to the provision of enhanced 911 services. Finally, we seek comment on whether additional steps are necessary to ensure that the benefits of 911 services are not diminished by new developments, including comments on what additional rules should be proposed to ensure universal 911 access policies, and for an analysis of jurisdictional issues that might be raised.

VII. ORDERING CLAUSE

61. Accordingly, pursuant to Sections 1, 3, 4, 5, 201-205, 208, 215, 218, 226, 227, 302, 303, 313, 314, 332, 403, 404, 410, 602 of the Communications Act of 1934, as amended, 47 U.S.C. 151, 153, 154, 155, 201-5, 208, 215, 218, 226, 227, 302, 303, 313, 314, 332, 403, 404, 410, 602, IT IS ORDERED that NOTICE OF PROPOSED RULEMAKING is hereby provided to amend Sections 68.1, 68.3, 68.106, 68.228, 68.308, and 68.320 of the Commission's rules, 47 C.F.R. §§ 68.1, 68.3, 68.106, 68.228, 68.308, 68.320, as indicated above and in Appendix C hereof.

VIII. ADMINISTRATIVE PROVISIONS

62. This is a non-restricted notice and comment rule making proceeding. Ex parte presentations are permitted, except during the Sunshine Agenda period, provided they are disclosed as provided in the Commission's Rules. See generally 47 C.F.R. Sections 1.1202, 1.1203, and 1.1206(a).

63. Initial Regulatory Flexibility Analysis. As required by Section 603 of the Regulatory Flexibility Act, the Commission has prepared an Initial Regulatory Flexibility Analysis (IRFA) of the expected impact on small entities of the proposals suggested in this document. The IRFA is set forth in Appendix A. Written public comments are requested in the IRFA. These comments must be filed in accordance with the same filing deadlines as comments on the rest of the Notice, but they must have a separate and distinct heading designating them as responses to the Initial Regulatory Flexibility Analysis. The Secretary shall send a copy of this Notice of Proposed Rule Making, including the Initial Regulatory Flexibility Analysis, to the Chief Counsel for Advocacy of the Small Business Administration in accordance with paragraph 603(a) of the Regulatory Flexibility Act. Pub. L. No. 96-354, 94 Stat. 1164, 5 U.S.C. Section 601 et seq (1981).

64. Comment dates. Pursuant to applicable procedures set

forth in Sections 1.415 and 1.419 of the Commission's Rules, 47 C.F.R. Sections 1.415 and 1.419, interested parties may file comments on or before January 9, 1995 and reply comments on or before February 8, 1995. To file formally in this proceeding, you must file an original and four copies of all comments, reply comments, and supporting comments. If you want each Commissioner to receive a personal copy of your comments, you must file an original plus nine copies. You should send comments and reply comments to Office of the Secretary, Federal Communications Commission, Washington, D.C. 20554. Comments and reply comments will be available for public inspection during regular business hours in the FCC Reference Center (Room 239) of the Federal Communications Commission, 1919 M Street, N.W., Washington, D.C. 20554.

65. The proposed action is authorized under Sections 1, 4, 5, 201-205, 208, 215, 218, 226, 227, 302, 303, 313, 314, 332, 403, 404, 410, 602 of the Communications Act of 1934, as amended, 47 U.S.C. 151, 154, 155, 201-5, 208, 215, 218, 226, 227, 302, 303, 313, 314, 332, 403, 404, 410, 602.

66. For further information regarding this Notice of Proposed Rule Making, contact Suzanne Hutchings, Domestic Facilities Division, (202) 634-1802, or John Reed, Office of Engineering and Technology, (202) 653-7313.

FEDERAL COMMUNICATIONS COMMISSION

William F. Caton

William F. Caton
Acting Secretary

APPENDIX A

INITIAL REGULATORY FLEXIBILITY ANALYSIS

Reason for Action: This Notice of Proposed Rule Making responds to the petitions submitted by Texas Advisory Commission on State Emergency Communications (TX-ACSEC) and Adcomm Engineering Company to address issues raised by the provision of enhanced 911 services through commercial mobile radio systems, private branch exchanges, and similar equipment. Telephone stations for wireless services and wireline stations served by PBX equipment are not adequately identifying caller location to permit a timely response by emergency services personnel.

Objectives: The objective of this proposal is ensure access to enhanced 911 emergency systems on the public switched telephone network for callers served by private branch exchanges other dispersed private telephone systems, and for callers served by certain mobile services.

Legal Basis: The proposed action is authorized under Sections 1, 4, 5, 201-205, 208, 215, 218, 226, 227, 302, 303, 313, 314, 332, 403, 404, 410, 602 of the Communications Act of 1934, as amended, 47 U.S.C. 151, 154, 155, 201-5, 208, 215, 218, 226, 227, 302, 303, 313, 314, 332, 403, 404, 410, 602.

Reporting, Record Keeping and Other Compliance Requirements: Private branch exchanges and other dispersed private telephone systems will be required to maintain records for calling number identification, caller location identification, and a call-back numbers for each of their calling stations. Commercial mobile radio services will be required to identify the location of mobile transmitters and provide call back numbers for them. Equipment used for private branch exchanges and other dispersed private systems and commercial mobile radio services will have to be capable of providing this information to the local telephone exchanges to which they are connected. Local telephone exchanges will incur costs storing and relaying this information to enhanced 911 public service answering points.

Federal Rules Which Overlap, Duplicate or Conflict With These Rules: None.

Description, Potential Impact and Number of Small Entities Involved: The proposed changes in the regulations would affect a number of entities both large and small. An estimate of such parties affected is approximately 65 million new wireless services users and approximately 4 million PBX equipment manufacturers and owners.

Any Significant Alternatives Minimizing the Impact on Small Entities Consistent with Stated Objectives: With respect to PBX equipment, the NPRM asks whether the proposed rules must be applied where the equipment serves a physically small location, such as a single story building, or a small number of closely situated telephone stations.

APPENDIX B

911 CALL FEATURES

This appendix identifies 911 call features currently available to many emergency call taking organizations, listed in order of importance as defined in NENA/APCO leadership.

- Ability to reach emergency services by dialing 911
- Ability to permit call precedence for 911 over other call types
- Ability to identify caller's geographic location
- Ability to hear and determine the type of emergency services needed
- Ability to receive 911 calls within their jurisdiction (Selective Routing)
- Ability to detect and communicate with TTY and data callers
- Ability to hold the line for trace, after the caller has disconnected (Called Party Hold), or the ability to call back
- Ability to call the caller back after disconnection and/or perform re-ring with the called party held
- Ability to transfer the caller to the appropriate PSAP
- Ability to transfer the information screen to the appropriate PSAP
- Ability to force disconnect, regardless of the caller switch hook status

APPENDIX C

PROPOSED RULES

Part 68 of the Commission's Rules and Regulations (Chapter 1 of Title 47 of the Code of Federal Regulations, Part 68) is proposed to be amended as follows:

1. The authority citation for Part 68 remains as follows:

AUTHORITY: Sections 1, 4, 5, 201-205, 208, 215, 218, 226, 227, 303, 313, 314, 403, 404, 410, 602 of the Communications Act of 1934, as amended, 47 U.S.C. 151, 154, 155, 201-5, 208, 215, 218, 226, 227, 303, 313, 314, 403, 404, 410, 552.

2. Section 68.1 is proposed to be amended by deleting the present Section 68.1 in its entirety and substituting the following:

§ 68.1 Purpose

The purpose of the rules and regulations in this part is to provide for uniform standards for the protection of the telephone network from harm caused by the connection of terminal equipment and associated wiring thereto, for the correct operation of terminal equipment with public emergency access networks, and for the compatibility of hearing aids and telephones.

3. Section 68.3 is proposed to be amended by inserting, according to the alphabetical order of the term defined, each of the following definitions among the definitions already present:

*****

Enhanced 9-1-1: A telephone network feature that automatically provides emergency response agencies with telephone directory number and location information on calls placed to the national emergency number, 9-1-1.

*****

Enhanced 9-1-1 compatibility: The ability to relay a number associated with each served emergency response location.

*****

Enhanced 9-1-1 emergency services trunk: Any 2-wire or 4-wire telephone connection that provides access to Enhanced 9-1-1 service.

*****

Dispersed private telephone system: A PBX or similar multi-line telephone system whose connection to the telephone network carries emergency calls from more than one emergency response location.

*****

Emergency response location: A specific site, corresponding to a calling station in a dispersed private telephone system.

*****

Restriction: The blocking of specific dial codes and sequences during call initiation.

*****

3. Section 68.106 is proposed to be amended to read as follows:

§ 68.106 [Amended]

*****

(f) *Dispersed private telephone system trunk and station number verification for Enhanced 911 purposes*. Customers who install dispersed private telephone systems after [insert date 18 months after effective date of order adopting rules in this proceeding] shall provide the telephone company with:
(1) The number of trunk connections desired
(2) The number of stations that may originate emergency calls
(3) The number of, and identification of emergency response locations that will require number identification.
(4) The FCC Registration Number of the equipment being used.
The telephone company will provide 10-digit numbers for the identified emergency response locations.

Section 68.228 is proposed to be added as follows:

§ 68.228 Enhanced 911 trunk and station number verification.

a) *Verification requirements*.

(1) *General*. The proper transmission of station number identification (SNI) for the station dialing the emergency number 911 shall be verified as part of initial installation and subsequent changes in emergency response location data.
(2) *Station Number Identification*. The 10-digit station number identification transmitted for 911 calls shall be verified to: (i) be in the group of station numbers assigned to the trunk by the telephone company and, (ii) be assigned to the specific emergency response location of the corresponding calling station.
(b) *Verification personnel*. Work associated with the

verification of Enhanced 911 emergency services trunk operation shall be performed under the supervision and control of a supervisor as defined in paragraph (c) of this section. The supervisor and installer may be the same person.

(c) *Supervision*. Work by installation personnel shall be performed under the responsible supervision and control of a person who:

(i) Has at least 6 months of on-the-job experience in the installation of telephone terminal equipment;

(ii) Has been trained in the operation of Enhanced 911 emergency services trunks and in the performance of operations need to verify proper identification procedures and results.

(iii) Or, regardless of compliance with paragraphs (c)(1) and (c)(2) of this section, is a licensed professional engineer in the jurisdiction in which the installation is performed.

(d) *Verification procedure.* The installation supervisor shall provide written notification to the telephone company that the required verification tests have been performed, including the following information:

(1) The responsible supervisor's full name address and business telephone number; and

(2) The date when Enhanced 911 trunks will go into service, the date when the verification tests were completed, and a list of trunk identification numbers and station numbers verified.

(e) *Verification of changes*. Addition or deletion of Enhanced 911 data base entries will be cause for verification of operation.

3. Section 68.308 is proposed to be amended to read as follows:

§ 68.308 Signal power limitations.

*****

(b)***

(5)***

[In the table "MAXIMUM ALLOWABLE NET AMPLIFICATION BETWEEN PORTS (A)(B)(E)(F)" should show that enhanced 911 trunks operate with the same requirements as Public Switched Network Ports (2-Wire) by adding the words "Enhanced 911 trunks" after "Public Switched Network Ports (2-Wire)" in the first box at the top of the second column from the right.]

*****

Section 68.320 is proposed to be added as follows:

§ 68.320 Enhanced 911 compatibility: technical standards.

(a) *Trunk interface*. Enhanced 911 trunks are analog two-wire or four wire channels supporting either E&M type 1 or E&M type 3 signaling.

(b) *Station Number Identification signaling*. The station

number identification (SNI) code assigned to the emergency response location of a 911 caller will be sent from the registered equipment to the telephone company 911 system using multifrequency (MF) tone pulses, prompted by a solid off-hook indication from the telephone network.

(c) *Operability*. It shall be possible to access the Enhanced 911 trunk in emergencies whether or not system features are used that block access to normal dial trunks (i.e., restriction of all calls beginning with "9"). Access shall be provided whether users dial 911 or additional digits preceding 911.

(d) *Equipment levels*. The minimum number of Enhanced 911 emergency services trunks connecting a private switch to the telephone network shall be one (1). Additional trunks may be used at the user's option. Additional trunks shall be added to maintain an availability of P = 0.01 based on the number of users served.

(e) *Attendant Notification*. Equipment manufactured or imported after [one year after the effective date of the order adopting rules in this proceeding], or installed after [18 months after the effective date of the order adopting rules in this proceeding], must be capable of notifying an attendant or on-premises personnel, if present, and of providing station number identification and emergency response location to the attendant when a 911 call is dialed.

(f) *Information Requirements*. Equipment manufactured or imported after [one year after the effective date of the order adopting rules in this proceeding], or installed after [18 months after the effective date of the order adopting rules in this proceeding], must have the capability to provide the caller's station number identification, caller location identification, and call back number to PSAP personnel.

(g) *Labeling Requirements*. PBX and dispersed telephone systems manufactured or imported one year from the effective date of §68.320 shall comply with this section. Equipment of earlier manufacture shall comply with the subsection if installed [eighteen months from the effective date of the section] or any time thereafter. Such equipment must be reregistered by the manufacturer or other person responsible for equipment compliance with Part 68, if already registered but not compliant with §68.320. Dispersed private telephone systems and associated station equipment that are domestically manufactured or imported on or after [30 days, but not later than one year, from the effective date of the order adopting rules in this proceeding] that does not comply with §68.320 must be labelled by the manufacturer with a warning describing its limitations for those attempting to use it to call enhanced 911. The warning must appear on the devices and on the outside of the packaging in which it is marketed. The domestic manufacture or importation of dispersed private telephone system equipment that does not comply with §68.320 must cease as of one year from the effective date of §68.320.

PCIA, APCO, NENA and NASNA Emergency Access Position Paper

This paper presents a jointly developed position of PCIA, APCO, NENA and NASNA organizations to assist standards bodies in their development of appropriate standards for the implementation of access to emergency services from wireless communications systems via 9-1-1 type systems. It is the result of a joint analysis and an effort to resolve challenges to both the public safety as well as the wireless manufacturers and service provider communities. All participants in this effort have a desire to maximize the ability of using wireless access to facilitate rapid and effective contact with emergency services, when and where needed.

However, each group has a unique set of challenges to consider. The public safety organizations and their membership have an imbedded infrastructure base that they wish to guard against obsolescence. Wireless access implementations need to consider the ability to locate 9-1-1 callers and interwork with existing emergency service bureau systems, to guard against this obsolescence. The wireless manufacturers and service providers have economic and technological targets that must be met or new services such as Personal Communications Services (PCS) will, at best, be stymied or may never be launched.

The positions and requirements expounded here represent an effort to address the concerns of all participants. These recommendations (requirements) will be submitted as contributions

to the appropriate standards organizations for definition and adoption.

Introduction

This joint document has been prepared and is presented by the Personal Communications Industry Association (PCIA), the Association of Public Safety Communications Officials-International, Inc. (APCO), the National Emergency Number Association (NENA) and the National Association of State Nine One One Administrators (NASNA). A description of each organization is contained in Appendix A.

Discussion

The basic 9-1-1 (9-1-1) and Enhanced 9-1-1 (E9-1-1) systems in existence today have been designed to provide rapid response to calls for emergency services from landline subscribers. Existing basic 9-1-1 emergency services systems establish routing of calls to a Public Safety Answering Point (PSAP). E9-1-1 provides added capabilities including selective routing of a call to the appropriate PSAP for quick response to emergency calls, display of calling number, address and, in most cases, the name of the subscriber at the calling number. However, these systems may not address the particular and unique requirements of wireless communications environments. Appendix B defines emergency service call taker information and feature priorities for both wireline and wireless systems.

The mobile nature of wireless services and the unique qualities of Radio Frequency (RF) propagation may require adaptation of

existing emergency services systems and development of special location capabilities in wireless systems.

Emergency services access (9-1-1/E9-1-1) in a wireless environment needs the capability to identify the location of the radio port or cell site (or sector if sectored) serving the calling party. This level of location identification will provide information to assist in routing the call to the proper PSAP and serve as a beginning point from which more precise user location capabilities can be developed, as technology and economics allow.

The wireless user may be reporting an emergency while mobile and may be some distance away from the emergency when the call is completed. The call-taker will still need to verify the caller's location. This situation exists today for the wireline 9-1-1 callers because they may be reporting from a location remote from the incident. Modifications to many of the existing emergency services systems will be necessary to provide both location and call back number.

New and developing wireless services, particularly PCS, will have new signaling platforms and protocols which might not be compatible with the existing information retrieval capabilities of the current emergency services systems. An additional challenge for interconnection of wireless telephone systems and emergency services systems will be to not substantially modify PSAP call taker procedures. The end user (PSAP call taker) processes should be similar to existing processes even though some infrastructure changes (such as signaling and data interfaces) may be necessary.

Requirements

Currently wireless systems communicate with a number of emergency service entities. These include basic 9-1-1 systems, enhanced 9-1-1 systems, police dispatchers, etc. The following requirements deal with wireless access to 9-1-1 - type systems. These requirements do not necessarily apply to wireless access to non-9-1-1 type systems.

1. 9-1-1 Availability

A user should have the ability to reach emergency services from any service initialized[1] wireless handset in a home service area or subscribed-to roamed service area by dialing the three digit number 9-1-1. No additional dialing digit sequence should be required to reach emergency services[2]. In addition, dialing 9-1-1 must override any lockout requirement for the handset or wireless terminal. Any handset that is service initialized on a wireless network must be allowed to make a 9-1-1 call, without a requirement for user validation.

2. Grade of Service

End to end grade of service objectives for wireless emergency access may involve several systems. Initiation of a wireless emergency access call will involve a wireless access system. Interconnection of the caller with a public safety call taker may involve interconnecting networks (e. g. PSTN) and termination of

[1] Service Initialized means that the owner has purchased services from a wireless service provider.

[2] This requirement does not preclude the implementation of an "emergency button" on the handset or the use of voice recognition to invoke the request for emergency access.

the call will involve the PSAP systems. Hence an overall grade of service objective, between a person in distress and a call taker, will require a cooperative effort between these initiation, interconnection, and termination systems. Proportioning grades of service within each system to reach overall objectives will need to be agreed upon locally and comply with appropriate local regulations.

Grades of service within each system will be established utilizing appropriate engineering and economic guidelines and are not areas subject for standardization.

Portions of the network used for emergency access may be the same for both wireline and wireless implementations. In some wireless implementations, a completely separate network may be used. In this instance, there could be a direct path from the wireless network to the Selective Router (S/R) or the PSAP. In other implementations, some portion of a LEC-based wireline network might be used to access the S/R or PSAP.

The following figure is an example of one network implementation and does not imply any particular ownership of the various network elements.

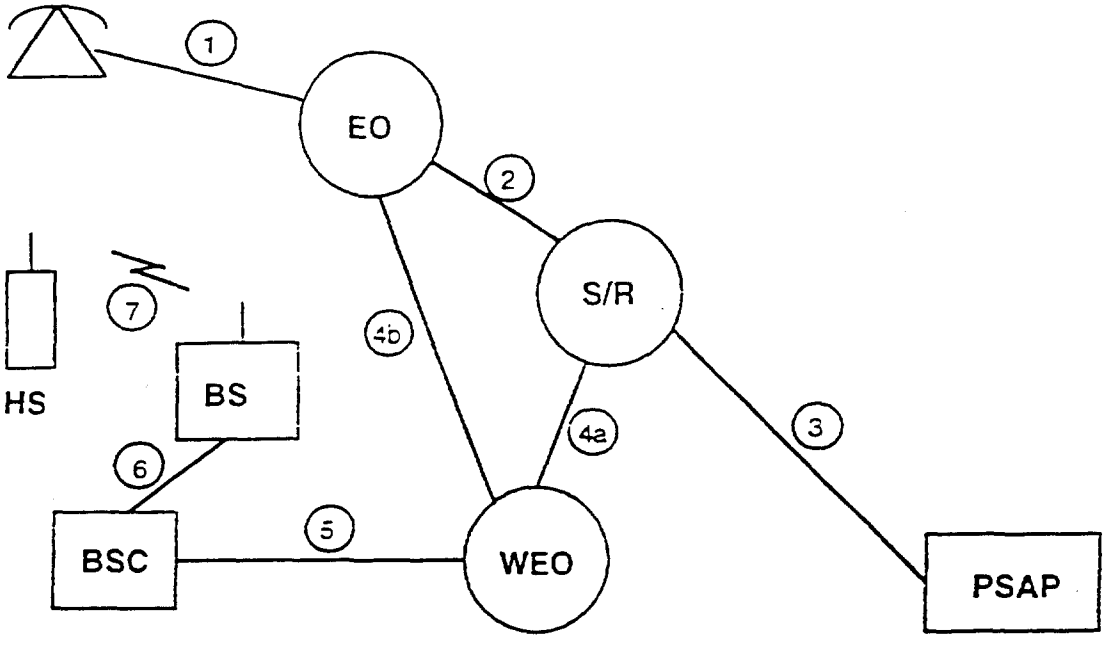

EO - end office (e.g., Class 5) S/R - selective router

HS - handset BS - base station

BSC - base station controller WEO - wireless end office

PSAP - public safety answering point

Link 1, between a wired telephone and an end office, is currently designed for a specified quality of service. This design is for minimum quality of service standard, and is typically specified by a State Public Utility Commission (PUC) and is not specifically designed for the requirements of emergency access. Links 7, 6 and 5 in a wireless system are analogous to link 1 in a wireline application, in that they are both the access path to an end office switch. Link 7 is

the radio path between the wireless terminal to the base station. Links 6 and 5 are generally designed to carry as much traffic as is generated over the radio links, in order to minimize call blocking. The driving force for the grade of service design for these links is the competitive environment in which wireless access services will exist. This necessity to compete in an area serviced by as many as 6 PCS, 2 cellular, 1 Enhanced Specialized Mobile Radio (ESMR) licensees and perhaps multiple local exchange carriers will prompt each service provider to maintain a grade of service high enough to keep customers (i.e., minimize blocking).

Links 2 and 3 however, may be interswitch trunks, whether dedicated or virtual, to emergency access and may be designed to a P.01 grade of service or to a grade of service negotiated and agreed upon by the 9-1-1 Delivery Provider[3] and the 9-1-1 Service Provider[4]. Implementations of links 4a/b should be designed to support the overall end to end grade of service objectives. These interswitch facilities could be used by either a wired or wireless access implementation.

A concern of this group is that the vagaries of marketing forces driving technical solutions may not, however, satisfy the emergency access and public use expectations.

Therefore, this group recommends that, for further consideration, the standards bodies developing radio standards investigate the feasibility of specifying technical solutions or strategies to minimize blocking of wireless 9-1-1 calls, from the radio

[3] Owner or provisioner of the S/R and the delivery facilities
[4] Owner or provisioner of the PSAP

system side of the network. Examples of issues to consider on the radio side might include load shedding, forced handoffs where existing calls can be maintained, etc. Issues for the public safety community to consider might include to use of advanced features such as Automatic Call Distribution (ACD) and Voice Response Units (VRU) to minimize blocking during overload conditions.

3. 9-1-1 Call Priority

An originating 9-1-1 call should have priority over other non-emergency services calls. This priority should extend to placing the 9-1-1 call at the beginning of a queue for calls waiting to be placed, if no radio or network resources are available. Because of the unknown nature or importance of calls in progress (i.e., a call to a suicide hotline or a poison control center), this priority requirement should not be interpreted to mean preempting or "bumping" a call in progress.

4. User Location Information

The wireless system should have the ability to identify the location of a wireless terminal used to make a 9-1-1 call. This location information shall be used to: (1) route a 9-1-1 call to the proper PSAP, based on the location of the base station to which that wireless handset is communicating and (2) provide the location of a terminal to the public safety call taker. Due to the concerns, both technical and financial, expressed by manufacturers and potential wireless service providers, a migration path for caller location is proposed. This migration path would start with a requirement for the location of the base station to which that wireless handset was

communicating and progress towards the ability to locate an individual wireless handset in a three-dimensional environment, as location technology and the cost of implementing such a technology become attainable. Technological advancements have indicated that the future may provide public safety with the ability to receive a high level of location accuracy from a wireless device.

It is the recommendation of this group that the standards bodies developing radio standards investigate the feasibility of specifying technical solutions or strategies to implement economically feasible detailed location capabilities at the call origination position and to make those capabilities available as soon as possible. Consideration should be given to both rural and urban environmental locational challenges and determine if a minimum geographic location accuracy within 400 feet could be achieved both technically and economically. A much higher level of location accuracy should be considered in urban environments where it will be necessary to determine the precise location of a caller within a multi-story structure.

5. Re-ring/Call back

The wireless system should have the ability of the emergency services call taker to reconnect, or call back the wireless handset if the call is disconnected or terminated prior to the finalization of the event. It should be noted that the group agreed that this requirement assumes the handset can receive the call back.

6. Information Elements Required in SS7 or ISDN-like Signaling

Future implementations of wireless systems and 9-1-1 type systems should be capable of providing a minimum number of information elements to the PSAP. The elements may include:

- Call back number and the handset subscriber's name
- Location of call origination, as discussed in section 4
- Class of service (e.g., residence, business, etc.)
- Wireless provider's name and telephone number
- Priority of the caller (e.g., hospital, school, etc.)
- Routing information to direct the call to the proper PSAP (Primary and Secondary PSAP identifiers)
- Transfer numbers - separate numbers to allow hot-key transfer of calls to police, fire and ambulance

7. Telephone Devices for the Deaf (TDD) Access

The wireless system should allow disabled individuals to access emergency services through means other than traditional wireless voice handsets (i.e., a TDD-like data device for the hearing impaired, etc.). To facilitate this requirement, there should be TDD-capable wireless devices but this does not impose a requirement that all wireless devices be TDD-capable.

It should be noted that new wireless systems will have a digital data capability. This capability will allow wireless users to communicate via data, without the use of traditional voiceband facilities. This capability must be accommodated in the PSAP, in order to serve the widest universe of the public.

8. Future Requirements

This document raises the need for additional work on a number of details concerning requirements and needs for future emergency access. The FCC and standards bodies, among others, should develop or request the development of detailed requirements, cost analyses and possible solutions.