EFFECT OF INTERFERER SIGNAL ON RA CARRIER INTERFERER TYPE: QPSK-27.5 (27.5MBd)

INTERFERER FREQUENCY OFFSET FROM RA CARRIER (MHz)

CA RATIO (DB)	-24	-22	-20	-18	-16	-14	-12	-10	-8	-6	-4	-2	0	+2	+4	+6	+8	+10	+12	+14	+16	+18	+20	+22	+24
+30	-	-	-	53	53	52	51	51	51	50	50	50	50	50	50	50	50	51	52	-	-	-	-	-	-
	-	-	-	64	64	64	64	63	63	63	62	62	61	62	62	63	63	63	64	-	-	-	-	-	-
	-	-	-	E	E	E	E	E	E	E	F	F	F	F	F	F	F	E	E	-	-	-	-	-	-
+28	-	-	-	52	52	52	51	51	51	51	49	49	49	49	49	49	50	51	51	-	-	-	-	-	-
	-	-	-	64	64	64	64	63	63	63	62	61	61	61	61	62	62	63	64	-	-	-	-	-	-
	-	-	-	E	E	E	E	E	E	E	F	F	F	F	F	F	F	E	E	-	-	-	-	-	-
+26	-	-	53	52	52	52	51	50	50	50	49	49	47	47	47	49	49	50	50	52	52	53	53	53	53
	-	-	64	63	63	63	63	63	62	61	61	60	60	60	61	62	62	63	63	64	64	64	64	64	64
	-	-	E	E	E	E	E	F	F	F	F	F	F	F	F	F	F	F	E	E	E	E	E	E	E
+24	53	53	52	52	52	51	50	49	49	49	47	46	45	45	45	45	47	49	50	52	52	52	52	52	52
	64	64	64	63	63	63	63	62	61	60	60	59	59	59	59	60	62	63	63	64	64	64	64	64	64
	E	E	E	E	E	E	F	F	F	F	F	F	F	F	F	F	F	F	F	E	E	E	E	E	E
+22	53	53	52	52	51	50	49	49	47	46	45	45	44	44	44	45	46	47	48	50	51	52	53	52	52
	64	64	63	63	63	63	63	62	60	60	59	58	58	58	59	60	62	63	63	64	64	64	64	64	64
	E	E	E	E	E	E	F	F	F	F	F	F	F	F	F	F	F	F	F	E	E	E	E	E	E
+20	52	52	52	51	50	50	49	49	44	44	43	42	42	42	42	43	44	45	47	49	51	52	51	51	51
	64	63	63	63	63	63	62	61	59	57	56	58	58	56	57	58	59	61	62	63	63	64	63	63	63
	E	E	E	E	F	F	F	F	F	F	F	F	F	F	F	F	F	F	F	F	F	E	F	F	F
+18	52	52	51	50	49	49	44	45	42	43	41	41	40	40	40	41	42	44	45	48	51	52	52	52	52
	64	63	63	63	63	62	61	59	55	58	55	54	54	54	56	58	56	60	61	62	63	63	63	63	63
	E	E	E	F	F	F	F	F	F	F	F	F	F	F	F	F	F	F	F	F	F	E	E	E	E
+16	51	51	51	49	49	47	45	43	40	41	40	39	38	38	38	38	40	42	44	47	50	51	51	50	50
	63	63	62	62	62	62	60	58	53	54	53	52	52	52	53	56	58	58	60	62	62	62	62	62	63
	E	E	E	F	F	F	E	F	F	F	F	F	F	F	F	F	F	F	F	F	F	E	E	E	E
+14	51	50	50	49	47	46	42	48	38	39	38	37	38	37	37	37	38	40	42	46	49	50	50	43	48
	62	61	61	61	62	60	58	56	61	62	61	60	60	60	61	63	64	66	68	61	61	62	62	62	62
	E	F	F	F	F	F	F	F	F	F	F	F	F	F	F	F	F	F	F	F	F	F	F	F	F
+12	48	49	49	47	46	44	41	40	36	37	36	35	35	36	36	38	37	38	40	44	47	48	48	43	47
	61	60	60	61	61	59	57	54	49	50	61	48	48	48	50	61	62	63	64	68	60	60	60	60	62
	F	F	F	F	F	F	F	F	F	F	F	F	F	F	F	F	F	F	F	F	F	F	F	F	F
+10	46	48	48	46	43	41	40	38	34	35	34	33	33	33	33	34	36	38	38	40	46	48	47	44	46
	60	59	58	59	60	58	55	52	47	48	47	47	46	47	47	48	50	61	64	62	58	59	59	59	60
	F	F	F	F	F	F	F	F	F	F	F	M	M	M	M	F	F	F	F	F	F	F	F	F	F
+8	46	46	46	44	42	39	38	38	32	33	32	31	31	31	31	32	34	36	37	38	43	47	48	44	44
	58	59	58	58	59	58	53	50	46	46	45	45	44	46	46	46	47	48	50	49	54	57	58	58	59
	F	F	F	F	F	F	F	F	M	M	M	M	M	M	M	M	F	F	F	F	F	F	F	F	F
+6	46	46	44	42	40	38	36	34	33	32	30	29	28	29	29	30	31	33	35	38	41	44	44	42	42
	57	56	56	56	58	54	51	48	48	46	43	42	42	42	43	44	46	47	48	49	52	54	56	57	58
	F	F	F	F	F	F	F	M	M	M	M	M	M	M	M	M	M	P	P	F	F	F	F	F	F
+4	43	43	43	40	38	36	34	32	30	29	28	27	27	27	28	28	30	31	33	36	38	42	42	41	40
	55	54	54	54	54	51	49	46	44	44	41	40	40	40	40	41	42	43	47	47	51	52	54	55	54
	P	P	P	P	P	P	M	M	M	I	I	I	I	I	I	I	I	M	M	P	F	F	F	F	F
+2	40	41	41	38	36	34	32	30	29	27	26	26	26	26	LS	27	28	29	32	36	38	40	40	38	39
	53	52	52	50	52	49	46	44	42	40	37	38	37	38	LS	38	39	41	44	45	48	49	52	53	56
	P	P	P	P	P	P	M	M	I	I	I	I	I	I	LS	I	I	I	M	M	P	P	P	P	P
0	38	40	41	38	38	33	32	30	28	27	26	26	26	LS	LS	27	28	30	32	34	37	40	40	38	38
	52	51	52	52	51	49	45	43	41	40	38	37	37	LS	LS	38	38	40	43	46	47	50	49	53	54
	P	P	P	P	M	M	I	I	I	I	I	I	I	LS	LS	I	I	I	I	M	M	P	P	P	P

VIDEO SOURCE: COLOR BAR
CARRIER/NOISE RATIO (C/N): 31 dB

DATA: SNR UNWEIGHTED / SNR NTC-7 WEIGHTING / TARO SUBJECTIVE SCORE

SEP-16-94 FRI 10:07 AM P.11

PAGE.011

EFFECT OF INTERFERER SIGNAL ON RA CARRIER INTERFERER TYPE: QPSK-27.6 (27.6/3/5)

INTERFERER FREQUENCY OFFSET FROM RA CARRIER (MHz)

CA RATIO (dB)		-24	-22	-20	-18	-16	-14	-12	-10	-8	-6	-4	-2	0	+2	+4	+6	+8	+10	+12	+14	+16	+18	+20	+22	+24
	+30	-	-	-	-	-	-	-	-	-	41	41	41	41	41	41	41	41	-	-	-	-	-	-	-	-
		-	-	-	-	-	-	-	-	-	66	66	66	66	66	66	66	66	-	-	-	-	-	-	-	-
		-	-	-	-	-	-	-	-	-	F	F	F	F	F	F	F	F	-	-	-	-	-	-	-	-
	+28	-	-	-	-	-	-	-	-	-	41	41	40	40	40	41	41	-	-	-	-	-	-	-	-	-
		-	-	-	-	-	-	-	-	-	66	66	64	64	64	66	66	-	-	-	-	-	-	-	-	-
		-	-	-	-	-	-	-	-	-	F	F	F	F	F	F	F	-	-	-	-	-	-	-	-	-
	+26	-	-	-	-	-	-	-	41	41	40	40	40	40	40	40	40	41	41	41	41	-	-	-	-	-
		-	-	-	-	-	-	-	66	66	64	64	64	64	64	64	64	66	66	66	66	-	-	-	-	-
		-	-	-	-	-	-	-	F	F	F	F	F	F	F	F	F	F	F	F	F	-	-	-	-	-
	+24	-	-	-	-	-	-	-	41	41	40	40	40	40	40	40	40	40	40	41	41	-	-	-	-	-
		-	-	-	-	-	-	-	66	66	64	64	64	64	64	64	64	64	64	66	66	-	-	-	-	-
		-	-	-	-	-	-	-	F	F	F	F	F	F	F	F	F	F	F	F	F	-	-	-	-	-
	+22	-	-	-	-	-	41	41	41	41	40	39	39	40	40	40	40	40	40	40	40	-	-	-	-	-
		-	-	-	-	-	66	66	66	66	64	63	63	64	64	64	64	64	64	64	64	-	-	-	-	-
		-	-	-	-	-	F	F	F	F	F	F	F	F	F	F	F	F	F	F	F	-	-	-	-	-
	+20	-	-	-	-	-	41	41	41	41	40	40	40	40	40	39	39	39	39	39	39	-	-	-	-	-
		-	-	-	-	-	66	66	66	66	64	64	64	64	64	63	63	63	63	63	63	-	-	-	-	-
		-	-	-	-	-	F	F	F	F	F	F	F	F	F	F	F	F	F	F	F	-	-	-	-	-
	+18	41	41	41	41	41	40	40	40	39	38	38	38	37	38	38	38	38	40	40	40	41	41	41	41	41
		66	66	66	66	66	64	64	64	63	62	62	61	60	62	62	63	63	64	64	64	66	66	66	66	66
		F	F	F	F	F	F	F	F	F	P	P	P	P	P	P	F	F	F	F	F	F	F	F	F	F
	+16	41	41	41	41	41	40	40	39	38	38	37	37	37	37	37	37	38	39	40	40	40	40	40	40	41
		66	66	66	66	66	64	64	63	62	61	60	60	60	60	61	62	63	63	64	64	64	64	64	64	66
		F	F	F	F	F	F	F	F	P	P	P	P	P	P	P	P	P	P	F	F	F	F	F	F	F
	+14	41	41	41	40	40	40	39	38	37	36	36	35	35	35	36	37	37	38	39	40	40	40	40	40	40
		66	66	66	64	64	64	63	62	61	60	49	49	49	49	49	61	61	62	63	64	66	66	66	66	66
		P	F	P	P	F	F	F	P	P	P	P	P	P	P	P	P	P	P	F	F	F	F	F	F	F
	+12	41	40	40	40	40	39	39	37	36	36	34	34	33	33	34	34	36	36	38	39	40	40	40	40	40
		66	64	64	64	64	64	62	61	60	49	49	47	47	47	49	49	60	62	62	63	64	64	64	64	64
		F	F	F	F	F	F	P	P	P	P	P	P	M	M	M	P	P	P	P	F	F	F	F	F	F
	+10	41	40	40	40	39	39	38	36	34	33	33	32	32	32	33	34	36	37	38	39	39	40	40	40	
		66	64	64	64	64	62	61	49	49	47	44	46	45	46	49	47	49	49	61	62	63	63	63	64	64
		F	F	F	F	F	P	P	P	P	P	P	M	M	M	M	P	P	P	P	P	F	F	F	F	F
	+8	40	40	40	39	39	38	36	34	32	31	30	30	30	30	31	32	33	34	36	37	39	40	40	39	39
		64	63	63	62	63	61	49	49	49	46	44	44	44	44	46	49	49	49	60	60	62	62	62	63	64
		F	F	F	P	P	P	P	P	M	M	M	M	M	M	M	M	M	P	P	P	F	F	F	F	F
	+6	39	40	40	39	39	36	34	32	31	30	29	29	28	28	30	30	31	32	35	36	38	39	39	39	39
		63	63	63	62	63	60	49	49	46	43	42	42	41	42	42	43	44	46	47	49	60	61	62	63	64
		F	F	P	P	P	P	P	M	M	M	M	M	M	M	M	M	M	M	P	P	P	F	F	F	F
	+4	39	39	39	38	38	34	32	30	29	28	27	27	26	27	28	29	30	31	33	36	37	39	39	39	39
		62	63	61	61	60	49	44	44	42	41	40	39	39	39	40	41	42	44	46	47	49	60	61	62	63
		F	P	P	P	P	P	M	M	I	I	I	I	I	I	I	I	I	M	M	P	P	P	P	F	F
	+2	39	38	38	37	35	33	30	28	27	26	26	LS	LS	LS	LS	27	28	30	32	34	36	37	38	37	37
		61	61	60	60	49	49	43	41	40	39	37	LS	LS	LS	LS	39	39	41	42	45	47	49	49	61	63
		P	P	P	P	M	M	M	M	I	I	I	LS	LS	LS	LS	I	I	I	M	M	P	P	P	P	P
	0	38	37	37	36	33	31	28	26	26	LS	LS	LS	LS	LS	LS	LS	LS	LS	30	32	36	37	37	38	38
		60	49	49	49	44	42	40	39	33	LS	LS	LS	LS	LS	LS	LS	LS	LS	40	42	46	47	49	49	61
		P	P	P	M	M	M	I	I	I	LS	LS	LS	LS	LS	LS	LS	LS	LS	I	M	M	M	P	P	P

VIDEO SOURCE: COLOR BAR
CARRIER/NOISE RATIO (C/N): 16 dB

DATA: RAW UNWEIGHTED / RAW NTC 7 WEIGHTED / TAND SUBJECTIVE SCORE

SEP-16-94 FRI 10:09 AM P.12
PAGE.012

Appendix A

Suite 12 Test Plan

Introduction

Suite 12 Group is the inventor of the CellularVision technology for the Local Multipoint Distribution Service ("LMDS"), and its affiliated entity, CellularVision of New York, L.P. ("CVNY"), is the only commercially licensed LMDS operator in the United States. CVNY currently operates a 49-channel LMDS video delivery system in Brighton Beach, New York. In order to expedite resolution of questions of potential interference between LMDS and FSS systems, the following is a plan for testing which Suite 12 Group proposes to conduct at CVNY's operating facility in Brighton Beach for the benefit of the LMDS/FSS 28 GHz Negotiated Rulemaking Committee. In addition to the testing described herein, Suite 12 Group envisions providing the Negotiated Rulemaking Committee with a live demonstration of the operating LMDS system in an interference environment.

Test Objective

The objective of the tests is to establish the interfering effects of digitally-modulated signals (which emulate FSS signals) upon typical LMDS systems -- in particular FM video. Protection ratios between the desired LMDS signal and the interfering digital signals are to be established or verified.

Interference Signal Types

Discussions with both Satellite and LMDS interests in the Negotiated Rulemaking have resulted in establishment of the following types of interference signals to be tested against the FM LMDS system:

(1) 64 kb/s rate QPSK

(2) 1.544 Mb/s (T1) rate QPSK

(3) 27.5 Mb/s QPSK

(4) Multiple T1 carrier signal (three separate T1 carriers).

The first interference type is intended to be representative of a fractional T1 or DS0 signal that may be broadly applied in FSS user terminals. The second type, T1, is also expected to be representative of expected FSS signal types. The third interference type, 27.5 Mb/s QPSK, is intended to emulate a burst transmission rate on an FSS terminal that operates at a T1 rate but utilizes a TDMA scheme for multiple access. Finally, the fourth interference type is intended to emulate a terminal which operates with multiple T1 carriers on a frequency-division basis. In all cases, the modulated carriers operate with a spectral efficiency of one bit per Hertz of RF bandwidth in the main spectral band.

The first three interference types are defined by their center frequencies and modulation rates. The fourth interference type, however, requires a more detailed definition. It is defined as follows: by definition, the center frequency of the multiple T1 carrier signal is the center frequency of the "middle carrier," where the three carriers are separated by 2.5 MHz such that there is approximately a 1 MHz guard band between the main spectral band of the individual QPSK signals. Thus, the total bandwidth of the composite signal is approximately 6.5 MHz, where there are three 1.5 MHz-wide T1 signals and two 1 MHz guard bands. This signal structure is shown in Figure 1.

Test Set-Up

A key goal of the tests, ancillary to the objective stated above, is to conduct the testing using an LMDS system which mirrors the Brighton Beach operating LMDS system in as many respects as possible. Adherence to this principle will produce results which can be confidently applied to the system-level interference analyses between LMDS and satellite systems which are a critical element of the Negotiated Rulemaking. With this goal in mind, Suite 12 has assembled a test set-up as shown in Figure 2.

The block diagram in Figure 2 shows both a motion video source and a TSG-170A video generator which can be alternately applied to an actual Suite 12 FM modulator ("CH6 MOD" in the figure). The output of the modulator, at an IF of 270 MHz, is applied to the Suite 12 system L-band upconverter (the CUC-1000). This is the actual L-band upconverter used in the Brighton Beach operational LMDS system. In its operational role, the upconverter is intended to block-upconvert 49 channels of video programming. In the test set-up, it is used to combine the desired 270 MHz video signal with the undesired interference, and further to upconvert it to the final IF of 2-3 GHz before application of the combined carrier and interference signal to the transmitter exciter.

Note that the interference signal against which the LMDS video quality will be tested is generated by using either one or three HP8782 Vector Signal Generators. These signal generators are capable of producing QPSK modulated signals of the types outlined above on single carriers over a frequency range and power dynamic range necessary to fully resolve the effects of interference on the LMDS video signal. In all cases, the signal generators will be operated with the "PRBS" random data generator output applied to the QPSK modulators, resulting in a random-data-modulated RF signal for testing. The signal generators will be externally clocked to produce the desired modulation rates.

As shown in Figure 2, when the three separate QPSK carriers are required to produce interference type number four (as defined in the previous section of this test plan) the outputs of the three signal generators are combined in a 16-channel combiner which is a part of the Suite 12 operational system. This is used for convenience--any three-input combiner would suffice--and because the 16-channel combiner linearity characteristics, insertion loss, and port-port isolation are well understood over the frequency and power dynamic ranges necessary for the tests. For the first three interference types defined in the previous section only a single signal generator is used to generate the interference signal. Its output is coupled to the L-band upconverter as in the triple-carrier case.

As Figure 2 shows, the output of the 16-channel combiner, which represents the interference signal at IF, will be varied in center frequency (by changing the frequency output of the signal generator(s)) to accomplish a frequency offset (Δf) from the carrier of the desired LMDS signal in accordance with specific test conditions desired. Details of the tests are defined in succeeding sections of this test plan. The interference is then applied to the input of the L-band upconverter along with the desired signal. In the upconverter, the desired LMDS signal and the interference signal are linearly combined and upconverted to the final IF of 2-3 GHz.

One of the key test points in the test set-up, **Test Point A**, is at the output of the L-band upconverter. Here, the carrier level is observed with the interference IF signals disabled, and also the level of the interference signal is observed with the desired LMDS signal at 270 MHz disabled. This allows independent observation of the carrier and interference levels using an HP8484A Power Sensor, HP436A Power Meter and an HP8565E Spectrum Analyzer. The power meter allows measurement of total power for the carrier and interference signals, and the spectrum analyzer allows visual verification of the frequency offset between carrier and interference, modulation characteristics, and relative power levels between the carrier and interference.

Note that after the output of the L-band upconverter, a selectable attenuation of 20 or 36 dB may be applied. This is to vary the level of the desired LMDS carrier and interference signal applied to the 28 GHz exciter, after the C/I ratio has been set, to allow operation of the LMDS subscriber equipment at two different operating points. This is discussed in detail below in the section on Parametric Variation in Tests. The output of the variable attenuator is applied to the 28 GHz exciter. This is the exciter employed in the CVNY operational system. The output of the exciter is then applied to a horn antenna and transmitted over a short span (four feet) to a Suite 12 subscriber unit which consists of an integrated antenna/block downconverter with an output at 950-1950 MHz. This output is applied to the input of the set-top receiver to produce a video output which is applied to the monitor for subjective picture quality characterization and to a Tektronix VM700A Video Analyzer to measure video signal-to-noise ratio.

Between the antenna and block downconverter in the subscriber equipment is **Test Point B**, which is the second key test point in the test set-up. While the actual subscriber unit used in the tests will not allow physical access to this test point, an antenna identical to that used in the subscriber unit is used to observe the RF level at 28 GHz at the input terminals to the subscriber block downconverter. This level is varied by varying the level of attenuation at the transmitter before the exciter, and observed at this test point to verify the receiver operating point for the test.

While this section serves as an overview of the test set-up, additional references will be made to the test set-up in the sections below.

Parametric Variation in Tests

The following parameters will be varied in the tests:

(1) Video Source

(2) Frequency Offset between LMDS carrier frequency and interference center frequency

(3) Carrier-to-Interference Power ratio

(4) LMDS Receiver Operating Point.

The video source will be varied between a standard color bar test pattern and a motion video source. Subjective quality scoring will be conducted using the standard color bar test pattern to establish consistency through all test conditions since even short motion video loops may include scene changes which alter subjective quality assessment results.

The frequency offset of the interference center frequency from the LMDS carrier frequency will be varied from ten (10) MHz below to ten (10) MHz above the LMDS carrier in one (1) MHz steps for the 64 kb/s and T1 QPSK interference signals (interference types one and two). For interference type three, the 27.5 Mb/s QPSK signal, the interference center frequency will be varied from twenty four (24) MHz below the LMDS carrier to twenty four (24) MHz above the LMDS carrier in two (2) MHz steps. For interference type four, the multiple T1 carrier, the interference center frequency will be varied from fourteen (14) MHz below the LMDS carrier to fourteen (14) MHz above the LMDS carrier in two (2) MHz steps.

The carrier-to-interference power ratio (C/I) will be varied over a range of zero to thirty (0 to 30) dB. This dynamic range should be large enough to cover a range of degradation conditions from complete lack of impairment to severe degradation in video picture quality. This C/I range will be varied as warranted during the tests.

The LMDS receiver operating point will be fixed at two different levels, and at each of the levels, the carrier-interference frequency offset and C/I power ratio will be varied as described in the preceding paragraphs for each of the interference types. The attenuator in the test set-up between the L-band upconverter and 28 GHz exciter will be adjusted to accomplish receiver operating points as follows:

- fifteen (15) dB carrier-to-noise ratio per video channel;

- thirty one (31) dB carrier-to-noise ratio per video channel.

The first operating point (15 dB C/N) approximates the C/N experienced at the edge of an LMDS cell during rain. The 31 dB C/N operating point approximates The C/N experienced at the edge of the LMDS cell in clear weather.

Consideration of Test Set-Up Limitations

In constructing the test set-up and planning for parametric variation in the tests, consideration has been given to the limitations imposed on the tests due to specifications of the equipment employed. As defined above, the tests can be conducted with no corruption of results due to equipment employed. This conclusion is based on a detailed examination of the following characteristics of the devices employed in the tests:

- power output range
- oscillator phase noise
- spurious response
- noise figure
- 3rd-order intercept point
- insertion loss
- port-port isolation
- conversion loss
- linear dynamic range.

The key components in the test set-up which were considered in this regard are the FM modulator, interference signal generators, 16-channel combiner, L-band upconverter, 28 GHz exciter, and subscriber equipment. The testing dynamic ranges for the victim FM carrier, interference carriers, noise levels, and C/I, C/N, and I/N ratios have been considered. For each of the components in the test set-up, the range of parametric

variation described in detail in the previous section is achievable within the linear dynamic range of the test set-up for individual components in the signal processing chain and from end-to-end. It should be noted that at the first receiver operating point (15 dB C/N), the range of C/I levels to be tested (zero to 30 dB) will place the interference below noise at some interference levels. This will simply reduce the number of significant test points for the parameter C/I.

Test Procedure

This section describes some procedures for the tests to clarify the testing approach and to allow ease of interpretation of results. References are made to Figure 2, the Test-Set Up. In general, tests will be conducted for a given video source (one of two), interference type (one of four) and receiver operating point (one of three) by setting a frequency offset between the LMDS carrier and interference and varying the carrier-to-interference ratio over a range of zero to 30 dB. Procedural issues for each of these parameters are addressed below.

Video Source

Video source will be selected between a standard color bar test pattern from the TSG-170A and a motion video sample.

Interference Type

The interference signal type will be configured using either one or three HP8782 vector signal generators with external clocking as discussed in a previous section of this test plan.

Receiver Operating Point

The subscriber receiver operating point will be established by selecting either twenty or thirty-six dB of attenuation in the transmission line between the L-band upconverter and the exciter. Selection of this attenuation value will produce a receiver operating point as follows:

Attenuator Setting	Receiver Operating Point
(dB)	C/N per video channel, (dB)
20	31
36	15

Once a receiver operating point is selected, the IF output of the subscriber receiver will be monitored with a spectrum analyzer to ensure that the subscriber antenna is "peaked up" on boresight to the transmitter antenna. The receiver operating points have been developed using the specifications of the equipment in the tests, which matches the equipment in the operational CVNY system, and observing the received power level at **Test Point B** in the test set-up. Repeated exercise of this test procedure has produced an receiver operating point accuracy of +/- 2 dB from the values shown in the table above. This accuracy is sufficient for the tests.

Frequency Offset Between LMDS carrier and Interference

The frequency offset between the LMDS carrier and the interference signal will be selected by the front panel center frequency selector on the HP8782, and verified at **Test Point A** with the spectrum analyzer.

Carrier-to-Interference Power Ratio

The carrier-to-interference power ratio (C/I) will be established by varying the output levels of the HP8782 signal generators to achieve a C/I in the range of zero to 30 dB. The carrier level will be held constant to hold the receiver operating point constant as C/I varies. The conversion gain of the L-band upconverter is identical for each of the two input ports, but the LMDS carrier and interference level will be established by using the power meter at **Test Point A.** Once a benchmark C/I is established at this test point, the C/I will be varied by selecting the desired output level(s) on the signal generators. The linearity of the front panel output level display versus the levels observed at **Test Point A** has been verified. The I/N ratio per video channel before the exciter is always 20 dB or greater for the C/I range of zero to 30 dB, so corruption from noise is not an issue at this stage.

The interference level required to establish a zero dB C/I will be established at the initiation of testing for each frequency offset between carrier and interference in the tests. The interference level will then be backed off by 30 dB to establish a C/I of 30 dB to begin the tests, and the C/I will be decreased to zero dB as a given test progresses.

Documentation of Results

For each test point, the VM700A video analyzer will be used to measure the video signal-to-noise ratio with two variations: the unweighted SNR, and the SNR with NTC-7 weighting. In addition to these quantitative measurements, the test engineer will observe a video monitor and assign a subjective video quality score using the TASO SNR/quality scale:

SNR (dB)	Picture Quality
55	Excellent
42	Fine
34	Passable
28	Marginal
21	Inferior

A sample matrix of results for the tests is shown in Figure 3.

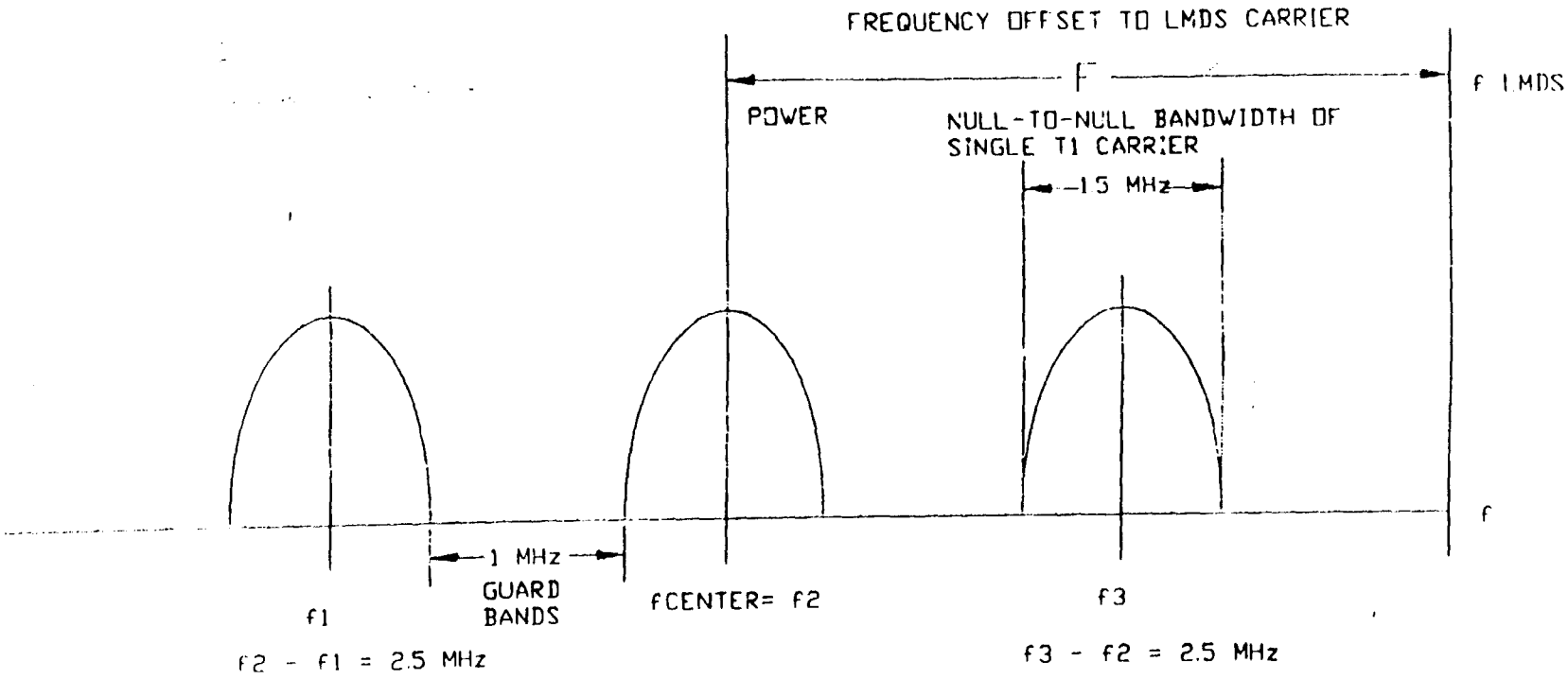

FIGURE 1. STRUCTURE FOR INTERFERER TYPE 4

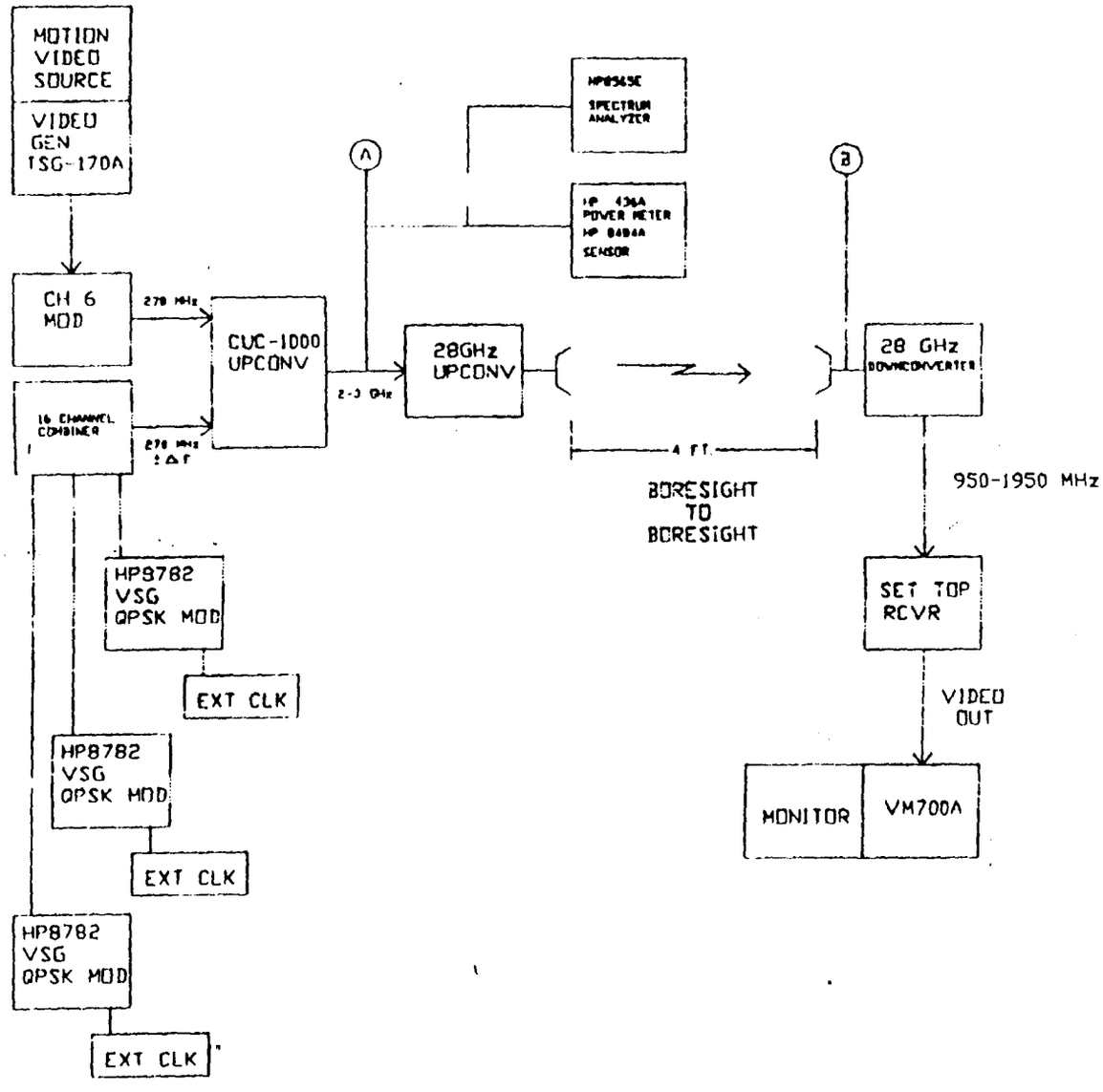

FIGURE 2. TEST SET-UP

EFFECT OF INTERFERER SIGNAL ON FM CARRIER INTERFERER TYPE: QPSK-T1 (1.544 MB/S)

INTERFERER FREQUENCY OFFSET FROM FM CARRIER (MHz)

C/I RATIO (DB)	-10	-9	-8	-7	-6	-5	-4	-3	-2	-1	0	+1	+2	+3	+4	+5	+6	+7	+8	+9	+10
+30																					
+28																					
+26																					
+24																					
+22																					
+20																					
+18																					
+16																					
+14																					
+12																					
+10																					
+8																					
+6																					
+4																					
+2																					
0																					

PROGRAM SOURCE: MOTION VIDEO
CARRIER/NOISE RATIO (C/N): 15.95

DATA: SNR UNWEIGHTED / SNR WEIGHTED/ CCIR SUBJECTIVE SCORE

Appendix B

Experiment to Determine Effect of Burst Mode QPSK Interference on FM Video

Abstract

An experiment was performed with a burst mode QPSK signal used as an interferer into an LMDS FM video signal. The effect was noted by observation of the video signal quality, and quantitatively by noting the S/N of the video signal with a Tektronix VM700A. The results indicate the burst interference is somewhat less objectionable to the viewer than T1 data rate QPSK.

Procedure

The experiment was performed with the setup shown in Figure 1. The desired signal was a video color bar test pattern generated with a Tektronix TSG-170A. The QPSK signal was derived from an HP 8792B vector signal generator. The video signal was used to modulate a 270 MHz carrier in a frequency agile modulator. The FM signal was combined with the interfering QPSK signal and two signals were upconverted to 2 GHz and fed into a 28 GHz upconverter. This signal was transmitted to an LNB receiver, and fed to a Cellular Vision set top. The video output from the set top was fed to the Tektronix VM700A to measure the video S/N. This arrangement allows the interfering signal to be placed wherever desired with respect to the desired signal and their amplitudes to be varied either separately or simultaneously to simulate various path losses or C/N values. Measurements were made with interfering frequencies of f_0-4 MHz, f_0, and f_0+4 MHz, which represent the worst-case frequencies for observing the effect of interference on an LMDS signal. Throughout the experiment, care was taken to assure that signal levels were low enough to keep all intermodulation products well below the noise floor.

Measurements: Video S/N vs. Bit Rate

In this experiment, the video S/N and TASO subjective score were measured as a function of QPSK bit rate. The bit burst duration was 2.3 mS, and the burst repetition rate was 10 mS. The C/N was 31 dB, the C/I was 15 dB. The conclusion of the experiment was that the higher the bit rate, the higher the subjective picture quality. The effect of bit rate on S/N is not significant, and there is no direct correlation between S/N and picture quality. The results are shown in Table 1.

Measurements: Video S/N vs. C/I

In this experiment, the video S/N and TASO subjective score were measured as a function of C/I, over a span of 30 to 0 dB, in steps of 5 dB. The QPSK bit rate was T1 (1.544 Mbps), the bit burst duration was 2.3 mS, and the burst repetition rate was 10 mS. The C/N was 31 dB. The conclusion of the experiment was that a passable (P) picture quality can be maintained for C/I levels of up to 15 dB. The results are shown in Table 2.

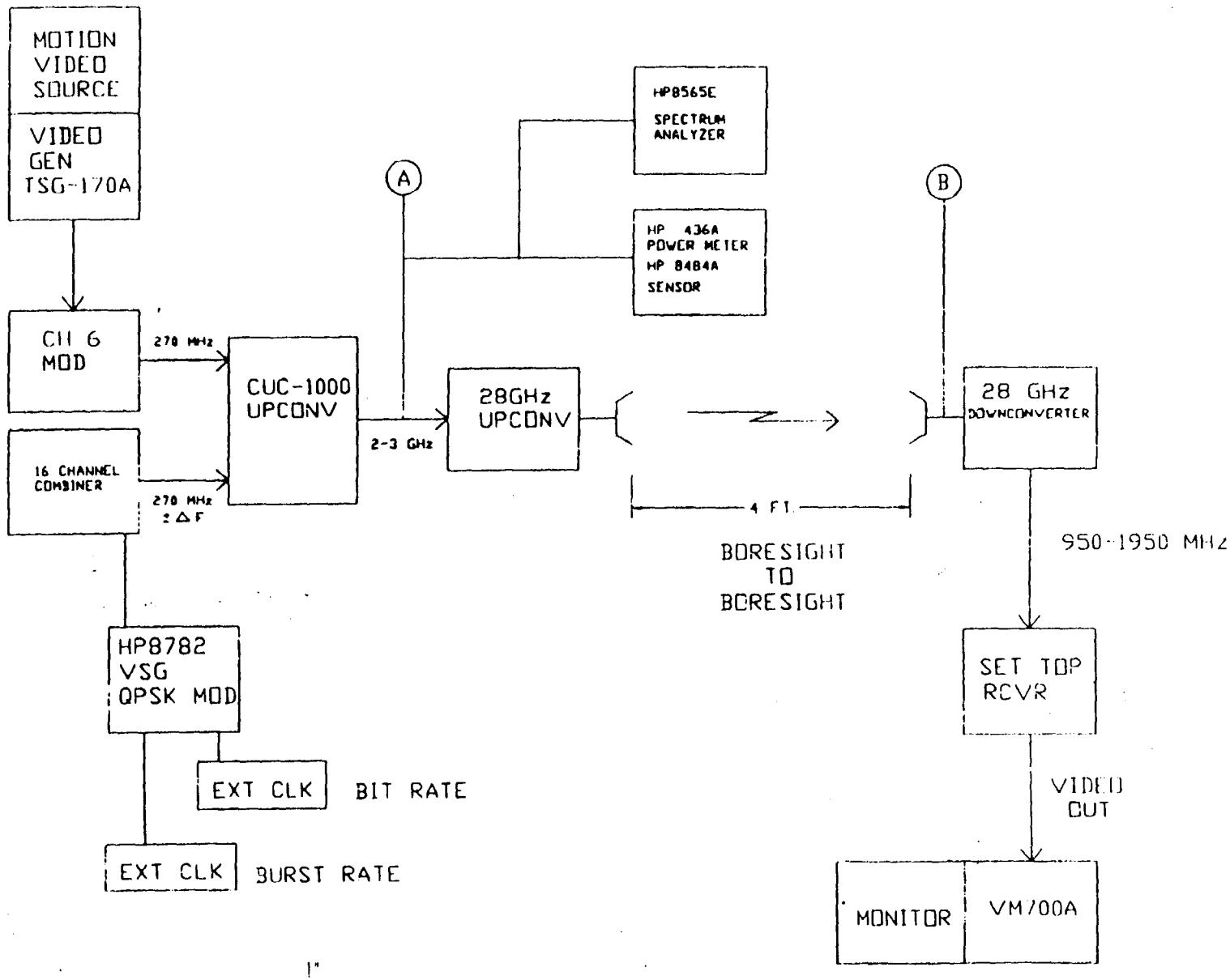

FIGURE 1: QPSK BURST MODE TEST SETUP

TABLE 1: VIDEO S/N VS. BURST BIT RATE BURST MODE 2.3 mS

		INTERFERER FREQUENCY OFFSET FROM FM CARRIER (MHz)		
		-4	0	4
	225	36 47 M	43 48 M	31 57 M
	450	36 47 M	42 47 M	31 57 M
BURST BIT RATE (KbpS)	675	36 47 M	42 47 M	31 56 M
	1125	36 47 P	42 47 P	31 56 P
	1350	36 47 P	42 48 P	31 56 P
	28800	38 50 F	37 50 F	37 50 P

VIDEO SOURCE: COLOR BAR
CARRIER/NOISE RATIO (C/N): 31 dB
CARRIER/INTERFERER (C/I): 15 dB

DATA: SNR UNWEIGHTED\NTC-7 WEIGHTED\TASO SUBJECTIVE SCORE

TABLE 2: VIDEO S/N VS. C/I RATIO INTERFERER TYPE: QPSK-T1 (1.544 MB/S) BURST MODE 2.3 mS

		INTERFERER FREQUENCY OFFSET FROM FM CARRIER (MHz)		
		-4	0	4
	30	48 57 F	51 57 F	43 58 F
	25	45 55 F	49 55 F	38 58 F
	20	40 51 P	45 51 P	34 57 P
C/I RATIO (DB)	15	36 47 P	42 48 P	31 54 P
	10	31 42 M	36 41 M	25 51 M
	5	26 37 I	30 36 I	21 43 I
	0	23 34 I	LS	LS

VIDEO SOURCE: COLOR BAR
CARRIER/NOISE RATIO (C/N): 31 dB LS = LOSS OF SYNC

DATA: SNR UNWEIGHTED\NTC-7 WEIGHTED\TASO SUBJECTIVE SCORE

Appendix B

Differences between weighted and unweighted SNR measurements

The Video SNR measurements mode on the Tektronix VM700A includes menu options for weighting and filtering according to different broadcast standards.When a weighting option is selected, the instrument selects by default certain low-pass filter options, depending on the weighting option selected. We have been using the NTC-7 weighting option to compensate for pre-emphasis employed in the Catel video modulator. When the NTC-7 weighting option is selected, the instrument selects by default the 4.2 MHz low-pass filter. Therefore, our SNR measurements are 2-part, the first being the unweighted, unfiltered "raw" SNR, and the second being the weighted, filtered option.

The bandwidth for the VM700A Noise Spectrum measurement option is +/- 6 MHz. This is displayed in the printouts attached. The horizontal axis is calibrated from 0 to 6 MHz and the vertical axis is in dB. When an interferer signal of significant amplitude is introduced at an offset frequency from the video carrier of 6 MHz or less, the contribution to the average noise level is significant, and is displayed graphically on the VM700A CRT.

The difference in dB between unweighted and weighted SNR measurements is largely a function of the filtering employed in the weighted mode. When the interferer offset is between 4 and 6 MHz , and the unweighted mode is selected, the significant contribution to the average SNR is displayed and recorded. When the NTC-7 weighting mode is then selected, the effect of the 4.2 MHz filter is to subtract most of the the noise contribution from the interferer, resulting in a difference of as much as 25 to 30 dB between unweighted and weighted SNR measurements.

As an example, in the case of a T1 interferer at an offset of +4 MHz with a C/I of +10 dB, the unweighted SNR is 27 dB, but when the filtering is added, the SNR rises to 53 dB, for a delta of 26 dB. But if the interferer is at an offset of +1 MHz, the unweighted SNR is 36 dB and the filtering raises the SNR to 45 dB, for a delta of only 9 dB, because most of the noise contribution from the interferer is still in the filter passband.

VM700A Video Measurement Set

Channel A System Default 12-Aug-94 06:03:46

Noise Spectrum Wfm --> Pedestal

Field = 1 Line = 17

Amplitude (0 dB = 714 mV p-p) Noise Level = -27.3 dB rms

Band width 10kHz to Full

T1
f_0 + 4 MHz
C/I = +10 dB

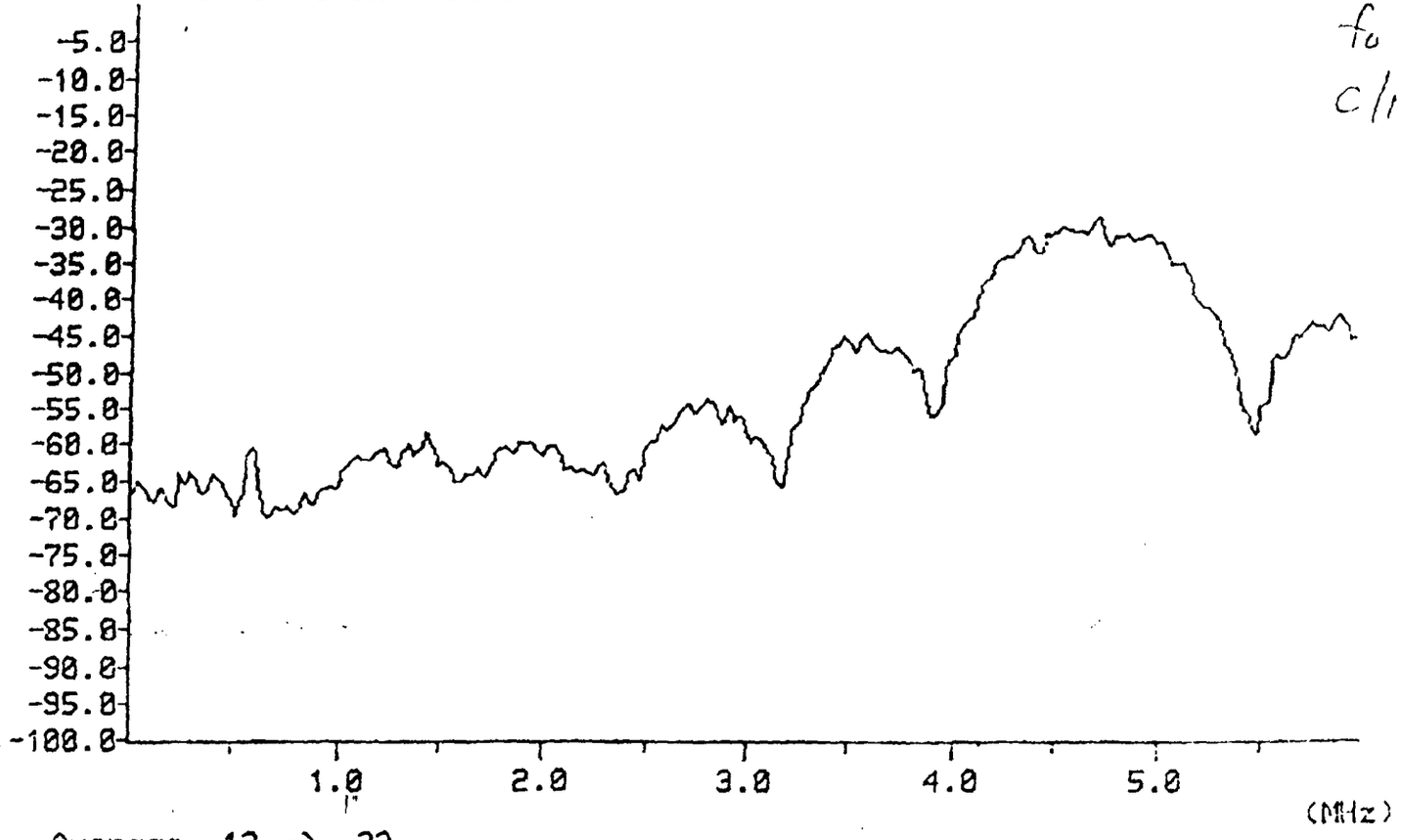

Average 13 -> 32

High Pass 100 kHz	Low Pass 4.2 MHz	Low Pass 5.0 MHz	Unified Weighting	NTC-7 Weighting	Fsc. Trap Filter	Tilt Null

VM700A Video Measurement Set

Channel A System Default 12-Aug-94 06:04:10

Noise Spectrum Wfm --> Pedestal

Field = 1 Line = 17

Amplitude (0 dB = 714 mV p-p) Noise Level = -53.0 dB rms

Band width 10kHz to 4.2MHz (NTC-7 Weight)

T1

f_0 = +4 MHz

C/I = +10 dB

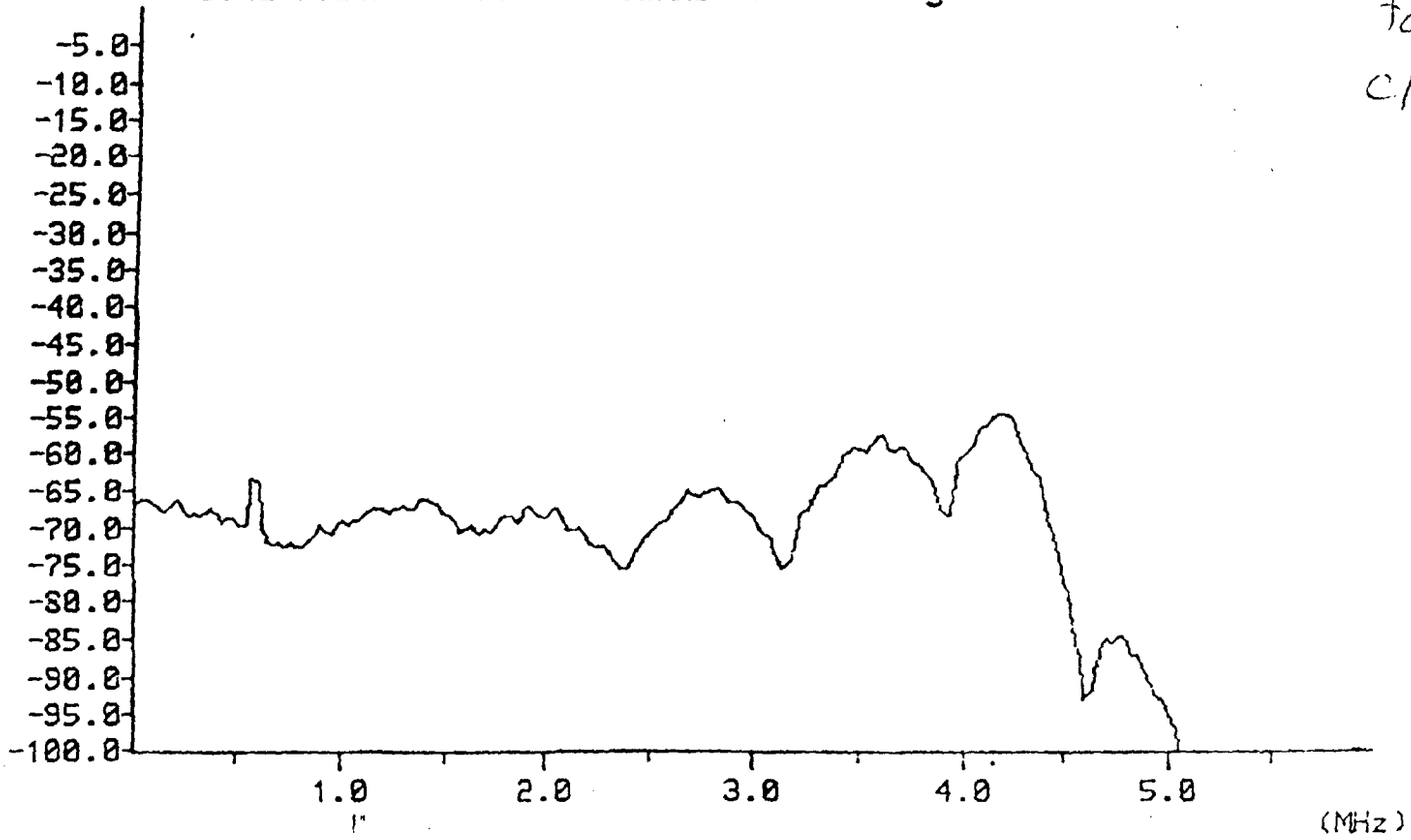

Average 32 -> 32

High Pass 100 kHz	[redacted]	Low Pass 5.0 MHz	Unified Weighting	[redacted]	Fsc. Trap Filter	Tilt Null

VM700A Video Measurement Set

Channel A System Default 12-Aug-94 05:52:02

Noise Spectrum Wfm --> Pedestal

Field = 1 Line = 17

Amplitude (0 dB = 714 mV p-p) Noise Level = -36.5 dB rms

Band width 10kHz to Full

T1

f_0 +1 MHz

C/1 = +10 dB

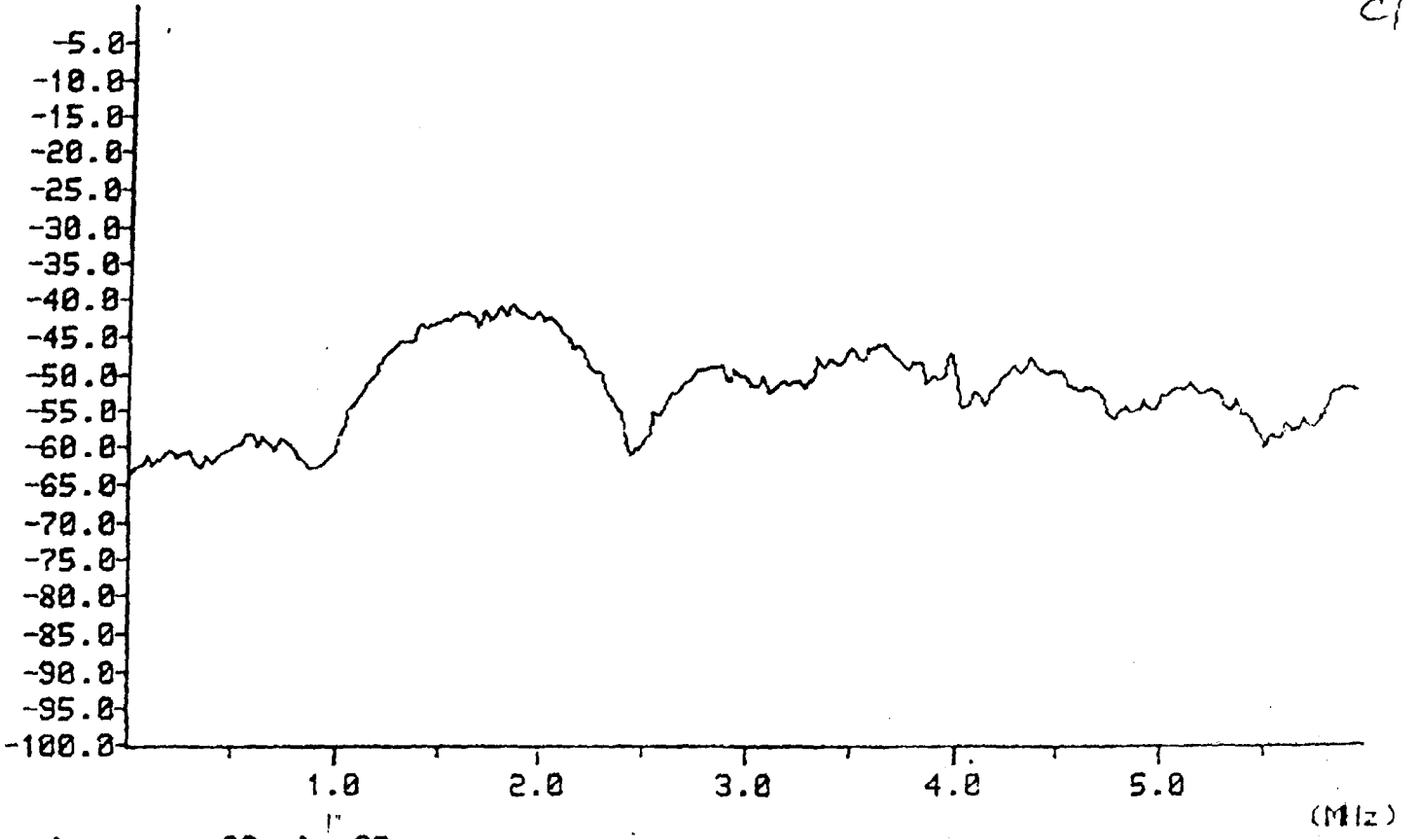

Average 23 -> 32

High Pass 100 kHz	Low Pass 4.2 MHz	Low Pass 5.0 MHz	Unified Weighting	NTC-7 Weighting	Fsc. Trap Filter	Tilt Null

VM700A Video Measurement Set

Channel A System Default 12-Aug-94 05:52:29

Noise Spectrum Wfm --> Pedestal

Field = 1 Line = 17

Amplitude (0 dB = 714 mV p-p) Noise Level = -45.1 dB rms

Band width 10kHz to 4.2MHz (NTC-7 Weight)

T1

fo + 1 MHz

c/i = +10 dB

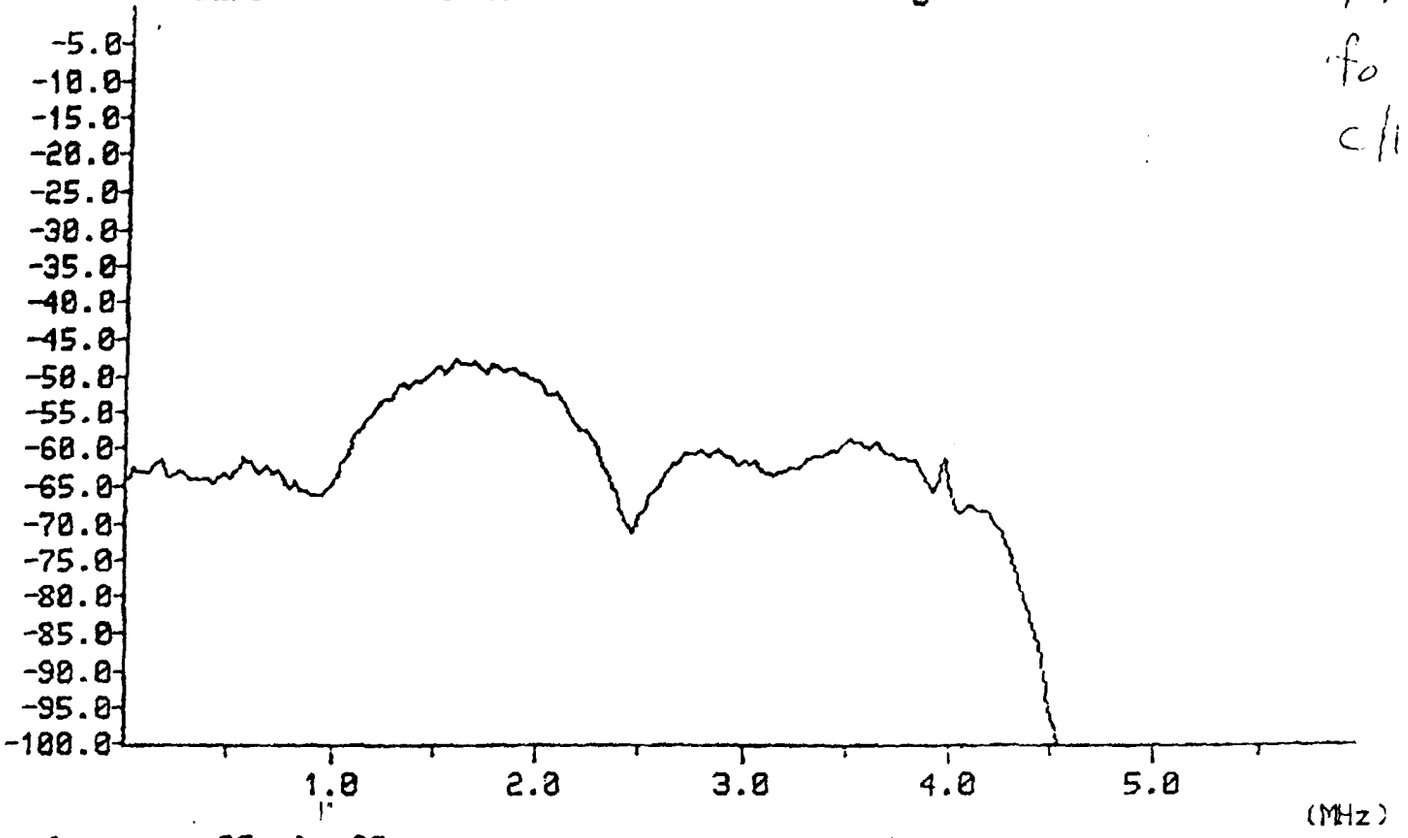

Average 32 -> 32

High Pass 100 kHz		Low Pass 5.0 MHz	Unified Weighting		Fsc. Trap Filter	Tilt Null

WG 1/83
NRMC - 94

RESULTS OF TESTING

TO ASSESS FSS UPLINK INTERFERENCE

INTO LMDS RECEIVERS

Testing Conducted

at NASA Lewis Research Center

PRELIMINARY REPORT

September 16, 1994

Prepared by:

Robert J. Kerczewski
and
James S. Svoboda

Space Electronics Division
NASA Lewis Research Center

Phone: 216-433-3434
FAX: 216-433-8705

BACKGROUND

The NASA Lewis Research Center's Space Electronics Division was asked to provide technical support for the FCC Negotiated Rulemaking Committee on LMDS/FSS Co-Frequency Sharing in the 28 GHz Band. In meetings of the "Informal Working Group" (IWG), consisting of members of LMDS and satellite industries as well as NASA, which took place before the start of the Negotiated Rulemaking Committee, NASA Lewis was asked to provide a draft test plan for tests to investigate the interference of FSS uplinks into LMDS receivers.

NASA Lewis responded with a draft test plan consisting of two sections: laboratory testing to determine the effect of certain types of interference on an FM video signal, and field tests to determine the amounts of interfering signals from a typical FSS uplink into a typical receive antenna. The members of the IWG settled upon several laboratory tests as most appropriate of the tests suggested in the draft test plan and asked NASA to proceed. More recently, one of the LMDS companies, Video/Phone, was able to provide a prototype LMDS receive antenna and requested, along with some of the satellite companies, that NASA perform the field tests suggested in the draft test plan.

The testing was required to be completed before the end of the Negotiated Rulemaking Committee, which placed an extreme time constraint upon the testing. The engineers and technicians at NASA Lewis, through a very concerted effort, were able to complete a series of tests addressing both the laboratory and field testing requirements, with testing completed on September 14, 1994. This report presents the results of these tests, a description of the test setups and procedures, and some preliminary conclusions and observations which we believe will be of benefit to those attempting to understand the issues of frequency co-sharing in the 28 GHz band.

INTRODUCTION

In response to the requests of the IWG members, NASA Lewis performed two sets of tests. The first tests, drawing upon Lewis's long history of research and development into communications techniques at Ka-band and interference testing in FM video systems, and making use of it's Advanced Space Communications Laboratory test facilities, consisted of simulations of several types of representative interference into an FM video test channel.

The test channel was configured to represent as closely as possible a typical LMDS video channel, and included a receiver/downconverter provided by the Endgate Corporation, a hardware supplier for the Video/Phone System. The interfering signals were digitally modulated, representing some of the bandwidths and data rates expected to be used in proposed Ka-band satellite systems. Of particular interest to the IWG were the narrowband types of interference, such as 1.544 Mbps (T1) QPSK, since the wideband types of interference are thought to be well understood, based in part upon previous studies conducted at NASA Lewis. The interferer and "desired" FM video channel were upconverted to, and combined at, 28 GHz, so that the receiver would see the interference throughout the entire receive hardware chain, as would occur in a real system. During these tests, the input carrier-to-interference ratio (C/I) and carrier-to-noise (C/N) ratio were independently variable. For several C/N