EX PARTE OR LATE FILED

BLUMENFELD & COHEN
SUMNER SQUARE
1615 M STREET, N.W. SUITE 700
WASHINGTON, D. C. 20036
202 955-6300
FACSIMILE 202 955-6460

101 CALIFORNIA STREET
42ND FLOOR
SAN FRANCISCO, CA 94111
415 394-7500
FACSIMILE 415 394-7505

DOCKET FILE COPY ORIGINAL

November 22, 1994

RECEIVED
NOV 2 2 1994
FEDERAL COMMUNICATIONS COMMISSION
OFFICE OF SECRETARY

VIA MESSENGER

William F. Caton
Acting Secretary
Federal Communications Commission
1919 M Street, N.W.
Washington, D.C. 20554

Re: ET Docket No. 93-7
Notice of Ex Parte Communication

Dear Mr. Caton:

Yesterday, representatives of Echelon Corporation met with James W. Olson, Chief, Martin L. Stern, Deputy Chief, and Paul F. Gallant of the Competition Division of the Commission's Office of General Counsel, and John Wong of the Commission's Cable Services Bureau, to discuss certain issues in connection with the captioned rulemaking proceeding. The issues addressed during the meeting related to the cable equipment compatibility proposals pending before the Commission, specifically the legal scope of the FCC's standardization authority, the potential exclusionary and anticompetitive effects of overbroad standards, the appropriate policy toward audio-visual equipment future interoperability, and alternative decoder interface technical arrangments to meet the requirements of the 1992 Cable Act. Representing Echelon were Oliver R. Stanfield, Vice President and CFO, Drew Hoffman, Vice President of Engineering, and Keith Raffel, Director of Marketing & Customer Support, along with the Jeffrey Blumenfeld and the undersigned as counsel.

Pursuant to Section 1.1206 of the Commission's Rules, two copies of the written materials supplied during this meeting are herewith submitted for the record. Please contact the undersigned should you have any questions in regard to this matter.

Sincerely,

Glenn B. Manishin

GBM:hs
Enclosures
cc (w/o encl.): Martin L. Stern, Esq.

No. of Copies rec'd 0+1
List A B C D E

INTELLON

Intellon Corporation
5100 West Silver Springs Blvd.
Ocala, FL 34482
Phone (904) 237-7416
Fax (904) 237-7616

October 21, 1993

RECEIVED
NOV 2 2 1994
FEDERAL COMMUNICATIONS COMMISSION
OFFICE OF SECRETARY

Ms. Lynnda K. Ell
Entergy
3838 N. Causeway Blvd.
Metairie, LA 70002

Subject: Intellon Intellectual Property Embodied in EIA/IS-60, CEBus

Dear Ms. Ell:

Thank you for the opportunity to clarify any confusion with regard to Intellon intellectual property contained in EIA/IS-60. Intellon holds one patent and has several others pending regarding Spread Spectrum Carrier™ technology, the technology upon which the CEBus power line and radio frequency physical layers are based. These patents and/or applications include the Spread Spectrum Carrier technique, Timing, Chirp Shaping, and Radio Frequency technique. The attached schedule lists the specific patents/applications and the countries in which we have applied for patent protection.

Also attached is a copy of the "Commitment to License" that was requested by the EIA in order to be adopted as part of the standard. The attached agreement refers to power line, a similar agreement has been executed for radio frequency. The difference between the agreements is that the term power line in the attached document was changed to read radio frequency in the radio frequency document. As proliferation of this technology is in Intellon's best interest, we are amenable to executing a similar commitment to license with ANSI for the purposes of your committee's work. We see such a commitment as reasonable protection for all parties.

Please contact me if you need further information.

Sincerely,

Eric Buffkin
Marketing Director

The following table summarizes the patent applications that have been filed to date by Intellon:

Patent Status Schedule

Patent Name	Filed	Status
Spread Spectrum Carrier - U.S.	8/23/89	Issued 2/18/92 (Patent No. 5,090,024)
Spread Spectrum Carrier Continuation - U.S.	10/11/91	Pending
Spread Spectrum Carrier - Australia	8/15/90	Pending
Spread Spectrum Carrier - Canada	8/22/90	Pending
Spread Spectrum Carrier - Europe	8/21/90	Pending
Spread Spectrum Carrier - Japan	8/23/90	Pending
Timing - U.S.	4/3/92	Pending
Chirp Shaping - U.S.	5/8/92	Pending
Radio Frequency - U.S.	7/31/92	Pending

COMMITMENT TO LICENSE

Intellon Corporation ("Proponent") wishes to have EIA incorporate into, or refer to in, the Power-Line Physical Layer and Media Specification and the Power-Line Symbol Encoding Sublayer portions of its CEBus interim standard (the "Standard"), technology that is or may in the future be covered or otherwise subject to a patent owned (or subject to license) by Proponent (said technology required for compliance with or implementation of the Standard being defined herein as the "Relevant Technology"). In consideration for EIA allowing continued consideration of said technology for incorporation into the Standard, and recognizing that EIA intends to rely on this Commitment To License, Proponent unconditionally agrees as follows:

1. Proponent agrees that, if the Relevant Technology is required for compliance with or implementation of the Standard, it shall license the making, using and selling of all of the Relevant Technology that is covered by or otherwise subject to any United States Patent, to all interested parties who wish to use said technology for the purpose of home automation in connection with the Standard, under reasonable terms and conditions that are demonstrably free of any unfair discrimination or limitation of access.

2. Proponent agrees that in determining whether terms and conditions are "reasonable", consideration shall be given to the benefits to Proponent resulting from inclusion of the technology in the standard.

3. Proponent acknowledges (i) that this Commitment To License is binding upon it, and has been provided to EIA for the third party benefit of all who wish to obtain a license to the Relevant Technology for the purpose of home automation in connection with the Standard, and (ii) that the parties contemplate that if the Relevant Technology is incorporated or otherwise referred to in the Standard, this Commitment To License shall be enforceable by each such third party.

4. To assist EIA in making its decision on standardization, Proponent agrees to submit all proposed licenses implementing this Commitment To License to EIA for its review. In the absence of unacceptable conditions, clear discrimination or clearly unreasonable terms or conditions, EIA may permit standardization without passing judgment on the economic terms of the license. However, EIA reserves the right, in making its decision on standardization, to question terms that appear unreasonable. A decision to permit standardization does not imply that EIA counsel or EIA has concluded that the submitted license conforms to the requirements of this Commitment To License. Proponent's submission of this Commitment To License does not in any way obligate EIA to include or otherwise refer to the Relevant Technology in any EIA standard (including, without

limitation, the Standard), and EIA may decide for any reason not to do so.

5. Proponent agrees to submit to EIA a copy of each license it enters into that licenses the Relevant Technology for the purpose of home automation in connection with the Standard. Proponent acknowledges that EIA may make copies of said licenses available for review by any interested party, provided that information identifying the licensee will not be made public.

6. By initialing this paragraph, Proponent agrees to submit any dispute concerning whether it is complying with this Commitment To License to binding third party arbitration under the rules of the American Arbitration Asscciation. _____

By: James E. Vander Mey

James E Vander Mey
Print Name

President
Title

4/8/92
Date

CC Docket No. 93-7 (Cable Equipment Compatibility Standards)

RECEIVED
NOV 2 2 1994
FEDERAL COMMUNICATIONS COMMISSION
OFFICE OF SECRETARY

1. Legal Scope of FCC Standardization Authority

   - Section 17 of 1992 Cable Act
   - Security/access v. non-programming functions
   - Home automation protocols (communications interface)

2. Exclusionary and Anticompetitive Effects

   - Mandatory inclusion of single home automation protocol
   - Technical/economic impact on home automation interoperability
   - Interim unapproved status of EIA IS-60
   - Patent issues
   - C3AG process

3. Interoperability Claims

   - Long history of anticompetitive use of interoperability claims
   - Governmental role for "plug and play" interoperability
   - Innovation rivalry for component and retrofitting home automation

4. Alternative Technical Solutions

   - Physical interface standard
   - Alternative architectures consistent with 1992 Cable Act

RECEIVED

NOV 2 2 1994

FEDERAL COMMUNICATIONS COMMISSION
OFFICE OF SECRETARY

DRAFT

IS-XX Audio/Video (AV) Bus Physical Layer and Media Specifications

1 Introduction

This document is the preliminary specification for the Audio/Video (AV) Bus Physical Layer and Media. Its purpose is to present all of the information necessary for the development of an AV physical network and devices to communicate and share information over that network.

This document covers the complete Physical Layer (OSI layer 1) including the interface to the Medium Access Control (MAC) Layer and the interface to the medium. The document also provides a complete set of physical and electrical specifications for the medium and the specification for a number of data channels available on the medium.

NOTE: Italicized sections in this paper are editorial comments.
Certain items require experimental data which is unavailable at this time; these are marked To Be Determined (TBD).

1.1 Safety Preamble

This preamble sets forth a number of recommendations related to safety concerns with respect to the AV Bus Draft Standard.

This discussion is not complete, nor does it address all possible safety issues. The designer is urged to consult, among other things, the relevant local and national electrical codes. Local codes usually supplement the national electrical code and impose additional safety related requirements.

It is strongly recommended that products conforming to the AV Bus Draft Standard be designed, constructed, assembled, and installed in accordance with recognized safety provisions appropriate to products covered by the standard.

AV Bus network cables as described in this standard are subject to potential electrical safety hazards during their use. These hazards are:

- Direct contact between network cable and components and power or lighting circuits.
- Potential differences between safety grounds to which network components are connected

These electrical safety hazards should be alleviated whenever possible for the network to perform properly.

1.3 Scope

This document contains the performance specifications necessary to implement an Audio/Video (AV) bus to carry baseband audio, video, and control signals for limited distances between consumer audio and video equipment in the home. The document is divided into six major sections:

1 - An introduction to the AV standard.

2 - A general description of the AV network design.

3 - The specifications of the allowed topology and configuration rules - this section covers network components, allowed wiring configurations, and attachment of devices.

4 - A specification of the AV physical medium - this section covers frequency allocation of the medium, cable usage, the physical and electrical specification of the medium, connectors, environmental requirements, and installation considerations.

5 - The Physical Layer specifications of an AV device - covers the interface to the higher ISO layers, control channel signal characteristics, data channel signal criteria, encoding, transmitter and receiver characteristics, and device failure modes.

6 - The CEBus Node 0 requirements for support of the AV network - covers the CEBus Node 0 components and requirements for successful network operation including control channel routing and data channel bridging criteria.

The standard establishes a minimum set of rules for compliance. It does not rule out extended services to be provided, as long as the rules are adhered to within the system. It is in fact the intention of the standard to permit extended services (defined by users) to coexist.

Certain aspects of the standard are defined in other documents. These documents will be referenced when relevant. In the case where a referenced standard conflicts with this document, this document will prevail.

1.4 Definitions and Abbreviations.

The following definitions are specific to the AV bus specification and supplement the definitions and abbreviations found in EIA IS-60.1.

baseband - In the AV Bus context, a signal appearing on a media which is directly represented by a voltage or current condition on the media and is not modulated onto another carrier signal of higher frequency.

circuit common - the zero reference of the AV device power supply and/or the device signal reference ground.

SVHS - Abbreviation for Super-VHS, an enhanced version of the VHS video format.

S video-Y - The separated luminance signal component of an SVHS signal.

S video-C - The separated chroma signal component of an SVHS signal

1.5. Relation of Specification to the CEBus model.

The AV Bus adheres to the CEBus model which is based on the OSI Reference Model. It is a 7-layer model (with some layers being null). There are also important extensions to the OSI Reference Model; CEBus has physical channels available on its media which can be allocated through resource management to various applications. This document specifies the following:

1. Physical layer of Control Channel
2. The physical media and device interface to the media
3. The data channels

Figure 1.1 below shows the scope of this specification in reference to the entire CEBus model. Here, only those aspects of the model relevant to the AV bus medium are specified. Anything outside of the boundary is either specific to another medium distinct from AV, or is generic in nature and applies across all CEBus media.

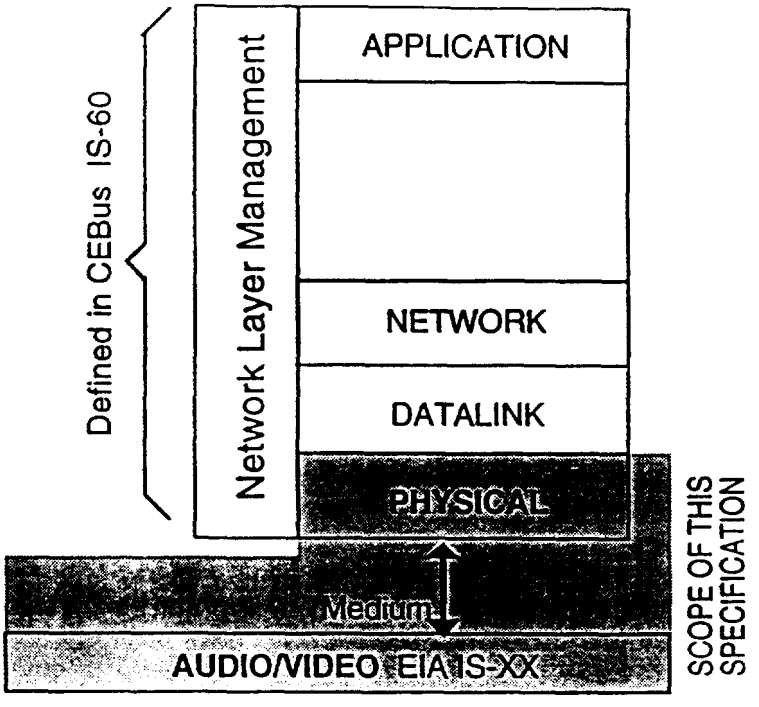

Figure 1.1 Relation of AV Bus Specification to IS-60 Model

2 General Description.

The AV bus is designed for the interconnection of audio/video equipment in a local area such as might exist in an entertainment equipment rack or cluster within a home. The bus consists of 10 twisted pair lines designed to support baseband audio and video signals over distances less than 10 meters, and is composed of the following:

- One pair dedicated for the CEBus control channel
- Four pair dedicated for audio bandwidth signals
- Four pair dedicated for video bandwidth signals

Physically, the bus consists of one or more AV bus cables (with connectors on each end) connected from one CEBus AV bus device to the next. Each A/V device has one or two connectors for from/to interconnection from a previous or next device. Two or more such devices comprise an AV bus network.

2.1 Functional Partitioning of AV Specification

This specification divides the complete AV environment into three basic parts: the network topology, the physical medium, and the device physical access specification. Figure 2.1 illustrates this partitioning as it relates to each part of the AV environment.

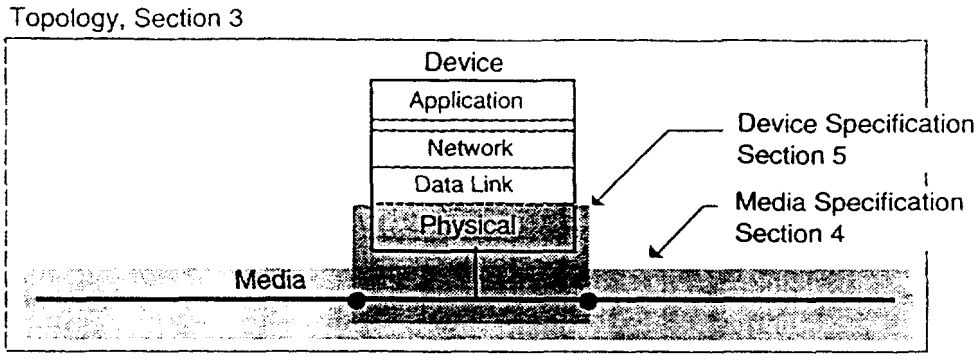

Figure 2.1 AV Specification Partitioning

The Topology specification deals with the anticipated configurations of AV wiring likely to be found in the majority of installations.

The Device specification deals with the physical properties of that part of the device which makes contact with the medium. Also described is the interface between the Physical Layer and the Symbol Encoding Sublayer.

The Medium specification concerns the capabilities and properties of the physical medium. This encompasses such items as its bandwidth, frequency allocation, electrical and physical specifications, connectors, etc.

3. AV Network Topology

The following Section deals with the physical topology of the AV network. Described is the allowed configurations of AV wiring, device connection, and minimum and maximum configurations.

3.1 AV Network Specification

3.1.1 AV Network Components

Figure 3.1 is a functional representation of the AV network. An AV network consists of two or more AV bus devices interconnected by an AV bus cable.

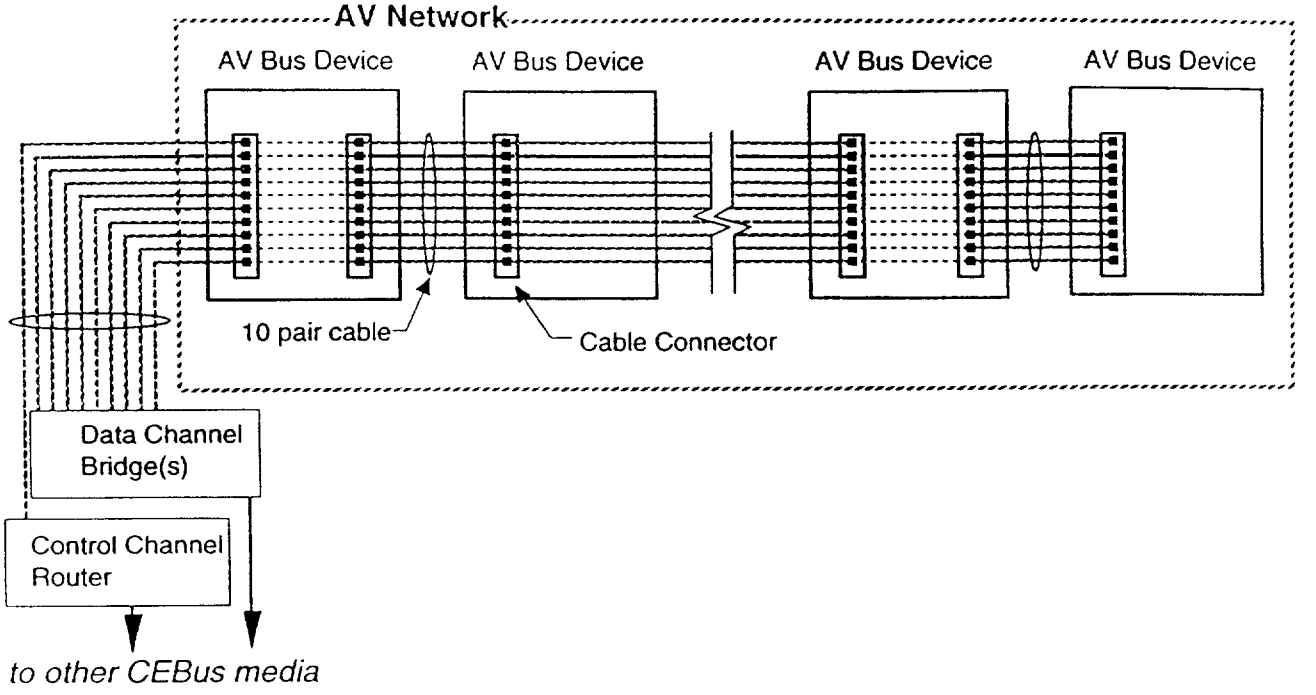

Figure 3.1 Basic CEBus Topology

The AV bus cable consists of ten individual twisted pairs to carry the control channel, four audio lines, and four video lines with one pair being used as a common mode reference (CMR) line. The cable is jacketed with a 20 conductor connector at each end. Figure 3.2 illustrates the construction and line naming of each pair of the cable.

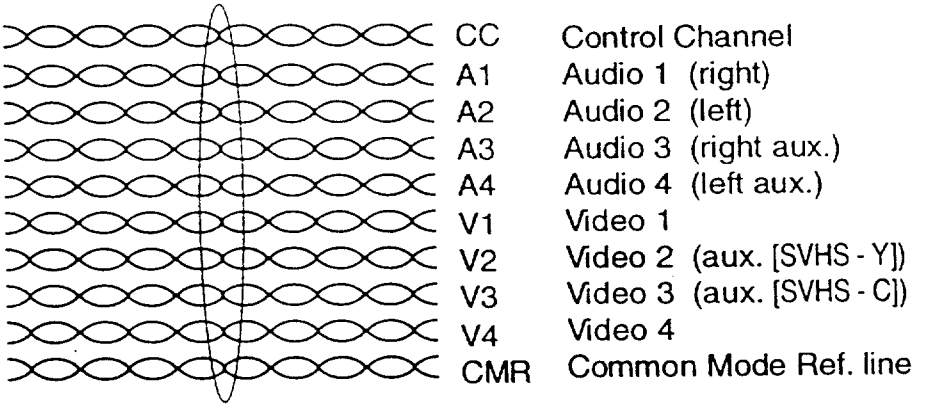

Figure 3.2 AV Bus Cable

The "Opt. Router" and "Data Bridge(s)" section shown in Figure 3.1 contains any optional control channel router and any data channel bridges for interconnection between AV networks and/or other CEBus media and is discussed in Section 6.

3.1.2 AV Bus Extensions

The optional extension of the AV bus, to include additional audio and video lines (in an additional cable), is under study. The additional lines would be under allocation control of the basic cable control channel requests. Any device which used the extension cable would be required to use the basic cable.

The basic cable may be referred to as AV 1 or AVb (basic). The extension cable would be referred to as AV 2 or AVe (extension)

The extension cable would use the same type of connectors as the basic cable but of opposite "gender" (i.e. the extension cable would use female plugs on the cable and male connectors on the equipment.

3.1.3 Allowed Topologies

Each AV network shall consist of two to ten devices interconnected with an AV bus cable. Each device will have one or two connectors for attachment of a cable from/to other devices. If two connectors are used, all twisted pairs will be internally connected in parallel from one connector to the other connector.

More than one AV network can exist in the home allowing connection between control channel lines by way of control channel routers. Any number of AV networks can be added in this manner.

3.1.4 AV Configuration Rules

AV networks shall be constructed according to the following rules. These rules are intended to minimize signal distortion (due to attenuation and reflections), signal and power loading, and assure reliable operation. Figure 3.3 illustrates these configuration requirements.

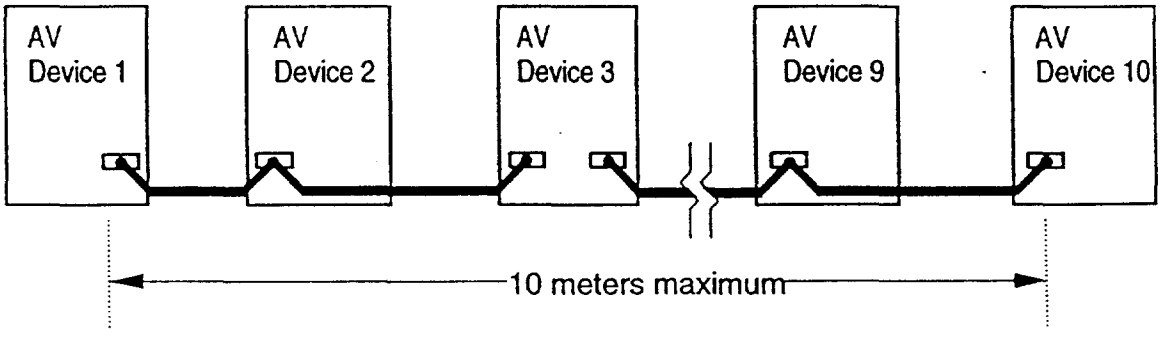

Figure 3.3 AV Network Branch

- A maximum of 10 AV devices may be attached to a single AV bus. If a separate router or data bridge device is attached to the network, the device counts as one of the allowed 10 AV devices.

- The maximum length of the AV network shall not exceed 10 meters.

- The maximum length of a single AV cable shall not exceed 10 meters.

- The first and last device on the bus shall terminate the four video lines by the manual attachment of a terminating device or selection of device termination.

- AV Cables may begin and end in only one connector, or they may have provision at either of both ends for attachment of another cable to allow "daisy chain" style attachment to devices with only one AV bus connector.

3.1.5 Junctions and Splices

Extending AV cables by junction or splicing devices is not permitted.

4. AV Medium Specifications

This Section specifies properties to which the AV bus media (cable) must conform. Both mechanical and electrical properties are specified. The specifications in this Section concern the medium sub-layer of the Physical Layer and apply to all configurations from fully loaded systems (those with the maximum allowable number of devices attached at maximum length), to systems with the minimum configuration.

4.1 Usage Rules

CEBus defines uses for each of its media. This usage must adhere to CEBus standards for electrical, access and frequency allocation.

Any combination of the AV bus lines available can be used by a device application from a minimum of one to a maximum of eight. AV bus lines are designated CC for control channel; A1, A2, A3, and A4 for the four audio lines; V1, V2, V3, and V4 for the four video lines; and CMR for the common mode reference pair.

The CC line is reserved for use by the control channel.

The audio lines (A1, A2, A3, A4) are reserved for use by baseband audio spectrum signals. A1 and A3 are recommended for use as audio right channels. A2 and A4 are recommended for use as audio left channels.

The video lines (V1, V2, V3) are reserved for use by baseband video spectrum signals. V4 can be used for any signal meeting the limitations of the video transceiver specifications of section 5.7.2.

4.2 Frequency Allocation

The AV Bus does not allocate frequency resources on its media. Rather, each medium is reserved for a particular class of use and the frequency spectrum on each medium is a function of the application and physical limitations of the medium. There are no specific frequency allocations given and it is assumed each application will use a baseband signal whose upper limit and amplitude meets the requirements of this specification.

The control channel on CC is completely specified in terms of data rate, waveform, amplitudes, and timing.

4.3 Data Channel Resource Allocation

The CEBus IS-60 resource allocation protocol can be used to allocate AV bus lines if each AV audio and video line is treated as a data channel resource. This allows CEBus CAL resource allocation commands to allocate one or more bus lines for use by an application. Each line is treated as a data channel resource and data channel numbers are assigned to each line and combination of lines.

The following table provides the relationship between the assigned data channel numbers and data channel resources (AV bus lines). The channel numbering is designed to allow for allocation of future AV bus extension lines.

	Bus Line	*Single Channels*	*2 channels*	*4 channels*	*Complete Bus*
First (basic) group of AV data ch. lines	A1	1	2	4	8
	A2	3			
	A3	5	6		
	A4	7			
	V1	9	10	12	
	V2	11			
	V3	13	14		
	V4	15			
Second (extension) group of AV data ch. lines	A1	17	18	20	24
	A2	19			
	A3	21	22		
	A4	23			
	V1	25	26	28	
	V2	27			
	V3	31	30		
	V4	33			
Additional AV lines (future ext.)					

To allocate one or more data channels (lines) for an application, a CAL resource allocation command is used. These commands are outlined in the Data Channel Transmitter and Data Channel Receiver Object contained in the IS-60 CAL Object definition tables. To request one or more lines, the IF method is used to perform a network query for the availability of the resource. See IS-60.08, the CAL Application Language. The CAL medium number for the AV bus is six (6).

The channel number assigned to each line and group of lines allows a simple encoding/decoding algorithm to determine both the number of lines requested and the specific starting group of lines. The least significant first non-zero bit indicates the number of lines requested

If the 2^0 bit is set, one line is requested
If the 2^1 bit is set, two lines are requested
If the 2^2 bit is set, four lines are requested (or three lines in the case of video lines)
If the 2^3 bit is set, all audio and video lines in a bus group are requested

To determine whether the requested lines can be allocated, the following algorithm can be used. If CIU = current channel in use, and RC = requested channel then:

If (|RC-CIU| <= Requested number of lines) then deny the request.

4.4 Mechanical Specifications

4.4.1 Cable Construction

The cable used for the AV network shall consist of twisted, 10-pair 28 AWG stranded wire (discrete or ribbon cable) covered by a PVC jacket. The jacket material shall be flexible PVC or polypropylene having a thickness of at least 0.02". The nominal outside diameter of the cable should be less than 0.30".

Pair Lays in the cable should be varied to minimize crosstalk.

4.4.2 Pair Construction

Each twisted pair in the cable will consist of 28 AWG stranded wire. The insulation of each twisted pair shall be PVC or polypropylene having a thickness of 0.0045" ±0.0005" and have the following color coding:??

Do we care what the color coding of each pair is??

Each pair will have at least XX twists per inch. The twists per inch should be varied between pairs to minimize crosstalk.

4.5 Electrical Specifications

4.5.1 Cable Electrical Characteristics

Twisted Pair cable used for the AV network will meet the following set of electrical characteristics:

Characteristic	Minimum	Maximum
DC resistance (per 1000'):		
28 AWG:		70Ω
Mutual Capacitance between wires of same pair:		20 pf/ft.
Stray Capacitance between 1 wire in pair to all other wires connected to ground:		40 pf/ft.
Attenuation (per 1000')		
at 1 KHz:		0.5 dB
at 1 MHz:		7.8 dB
Characteristic Impedance		
at 1 KHz:	??Ω	??Ω
at 1 MHz:	??Ω	??Ω

Additionally, the resistance unbalance between the two conductors of any AV pair shall not exceed 5%.

4.5.2 Insulation Leakage Resistance
The leakage resistance between any two wires of any AV pair will be greater than 1M ohms.

4.5.3 Termination
Termination of Audio bus pairs is not required.

Termination of Video bus pairs shall be 120Ω at the first and last device attached to the AV bus. Termination may be provided externally or, optionally, internally to the AV device by a selection mechanism.

4.6 Connectors
The AV bus cables and devices will utilize a special miniature insulation displacement style connector containing twenty single conductor contacts. The bus cables will use male connectors on each end. AV bus devices will use female connectors.

4.6.1 Connector Physical Specifications
The connector used for the AV bus will be a 20 pin insulation displacement device using a positive mating snap-in lock mechanism. The connector will use 50 mil spacing leaf spring type contacts in two rows capable of repeated connection and disconnection. A diagram of the connector is show in figure 4.1.

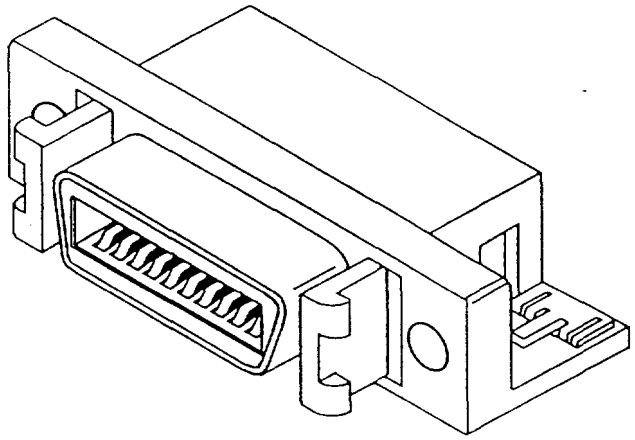

Figure 4.1 A/V Connector (male)

The physical outline and dimensions for the connector is given in Figure 4.2 and Figure 4.3 below. The connector show is the receptacle (female) end for AV equipment. The dimensions shown are nominal.

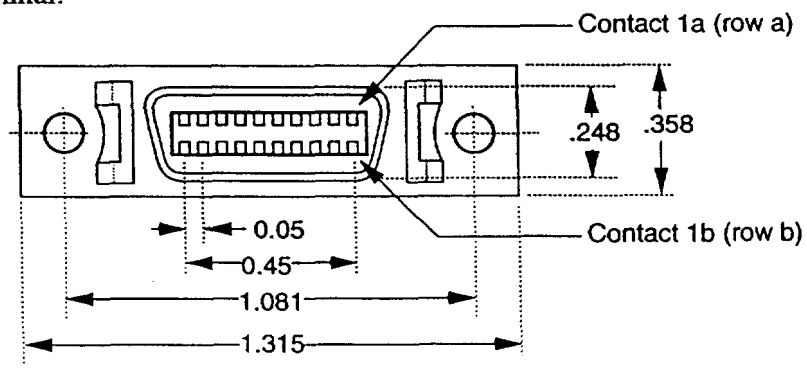

Figure 4.2 A/V Connector (female, equipment) elevation and pin numbering (shown 2X)

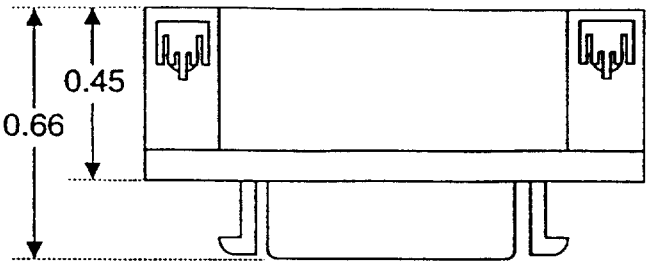

Figure 4.3 A/V Connector (female, equipment) plan view (shown 2X)

The connector numbering is shown as seen from the outside of an AV bus device. The cable connector will use the mating plug (male). The plug covering and mechanical attachment to the cable is not specified.??

Connector contacts will be beryllium copper with gold over nickel in the contact area and tin over nickel in the termination area.??

The connector specified is intended to be equivalent to the following commercially available parts:

JAE TX10 series
AMP CHAMP Series II

While the JAE and AMP connectors are physically similar, the pin numbering for the connectors uses different nomenclature.

PIN and SIGNAL Assignments

Function	JAE Pin	AMP Pin	wire color
Video 4+	1b	1	TBD??
Video 4 -	2b	2	
Audio 3 +	3b	3	
Audio 3 -	4b	4	
Video 2 +	5b	5	
Video 2 -	6b	6	
Audio 1 +	7b	7	
Audio 1 -	8b	8	
Video 1 +	9b	9	
Video 1 -	10b	10	
Audio 4 +	1a	11	
Audio 4 -	2a	12	
Video 3 +	3a	13	
Video 3 -	4a	14	
Audio 2 +	5a	15	
Audio 2 -	6a	16	
GND	7a	17	
GND	8a	18	
CC -	9a	19	
CC +	10a	20	

4.6.2 Electrical Specifications

The connector and connector contacts will meet the following minimum specifications:

Characteristic	Value
Current capacity	0.5A per contact
Voltage rating	250V AC rms
Dielectric breakdown	500V AC rms between contacts
Insulation resistance	500 Mohms between contacts
Contact resistance	35 milliohms maximum

4.7 Environmental Requirements

This Section specifies the environment in which the AV Bus system must function. Certain requirements are outside the scope of this standard; in these cases, requirements or guidelines set by other regulatory bodies should be observed.

4.7.1 Temperature and Humidity

The AV network is expected to operate within electrical specifications over a temperature and humidity range appropriate to the application. It is the responsibility of the

manufacturers of AV Bus compatible equipment to design to an adequate temperature and humidity operating range that will insure reliable operation in the intended areas of use in the home. The manufacturer should inform the user of the range selected for the product.

4.7.2 Electrical Overstress/Transients

The AV network and each AV device attached to the AV network must be capable of withstanding, without permanent damage, an electrical discharge from a 200pf capacitor through a 150Ω (max) non-inductive resistor. The capacitor is charged to a plus or minus voltage. Under the specified discharges voltages, the following conditions must prevail.

- <15KV - No "soft" failures will occur. No device state changes or damage to hardware will occur.

- 15KV to 20KV - No "medium" failures will occur. No unusual user action to restore service will be required and no damage to hardware will occur. State changes are permitted if the normal user controls can restore proper operation.

- 20KV to 25KV - No "hard" failures will occur. No damage to device hardware will occur. Unplugging the device from the power is permitted to restore proper operation.

Where is discharge from - to??

4.7.3 Radiated RFI/EMI

The complete AV system of wire and attached node equipment shall meet the requirements of FCC Part 15 Rules for electromagnetic radiation of unintentional radiators.

Signals coupled to any AV cable pair must be frequency constrained to limit rise time to meet acceptable limits of emitted radiation due to harmonics and to limit induced noise into other AV pairs.

5. AV Device Specifications

This Section covers the Physical Layer specifications of the AV device including:

- the Physical Layer interface to the Symbol Encoding Sublayer,
- the Physical Layer interface to the Application Layer,
- the physical signaling characteristics used on the AV media,
- the specification of the transmitter needed to generate the necessary AV bus signals,
- the specification of the receiver needed for proper reception of AV bus signals.

5.1 SE Sublayer to Control Channel Physical SubLayer Interface

The MAC sublayer to Physical Layer interface is detailed in IS-60.03, Part 7 which defines a media-independent sublayer of the Physical Layer that performs symbol encoding and timing. This Section will deal with the interface between the SE Sublayer and the Physical Sublayer which is always assumed to be different for each media. The SE Sublayer is assumed to provide the necessary encoding of the AV Bus symbols (1,0,EOF, EOP) into the necessary requests for SUPERIOR or INFERIOR states on the media for the required period of time and, likewise, encode the presence of SUPERIOR or INFERIOR states indicated on the medium into AV Bus symbols.

5.1.1 Relation of SE Sublayer to Physical Sublayer

Figure 5.1 shows the relationship of the Physical Sublayer to the SE Sublayer. This document deals only with the shaded areas in the Figure.

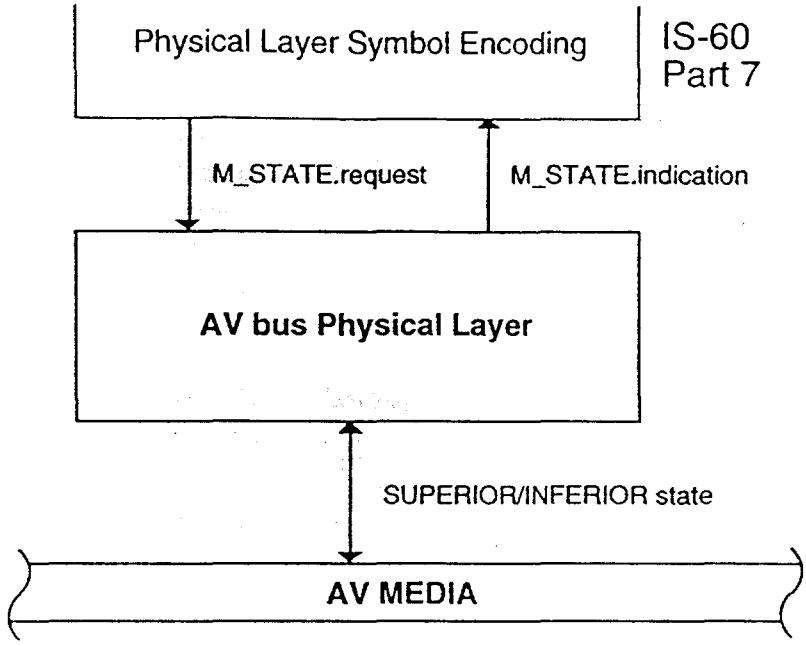

Figure 5.1 Relationship of Physical Sublayer to SE Sublayer

5.1.2 Service Primitive Definition

The following service primitives provide an interface between the SE Sublayer to and from the Physical Layer. The Physical Layer is assumed to contain all the necessary hardware (transmitter, receiver, etc.) necessary to perform the proper signaling on the media.

5.1.2.1 Physical Layer to SE Sublayer

The Physical Layer's responsibility is to report the state of the medium to the SE Sublayer. This is performed using the following service primitive:

M_STATE.indication(SUPERIOR | INFERIOR)

Whenever the Physical Layer detects the transition from SUPERIOR to INFERIOR or from INFERIOR to SUPERIOR the service primitive is used with the corresponding argument (SUPERIOR or INFERIOR).

5.1.2.2 SE Sublayer to Physical Layer

The SE Sublayer is responsible for directing the Physical Layer to send the SUPERIOR state, the INFERIOR state, or to toggle from the current state to the opposite state. This is performed using the following service primitive:

M_STATE.request(SUPERIOR | INFERIOR | TOGGLE)

The Physical Layer will remain in the last state requested by this service primitive until a different argument is passed (SUPERIOR if in INFERIOR, or INFERIOR if in SUPERIOR) or the TOGGLE argument is used.

5.2 Application Layer to Data Channel Physical Layer Interface

Access to the media Data Channel is controlled directly by the interaction of the device application layer and the device resource management entity. Access is requested and granted/ denied via service requests passed over the control channel.

The Application layer to Physical Layer interface is defined by a set of abstract service primitives and are not intended to imply any particular implementation. The service primitives provided by the Physical Layer allow the local application to establish a connection to the media for transfer of data with peer application layer entities at other nodes designed to be compatible at the Physical Layer (i.e. their physical signaling methods are the same). It is the responsibility of the resource management entity to make sure access has been logically granted since there is no provision in the Physical Layer to detect any data channel collision.

5.2.1 Data Channel Service Primitives.

The service primitives for the data channel define the request for access to the channel and provide for the status of the connection to the channel. It is assumed information on the data channel is automatically available to and from the application, thus no service primitive for the data need be defined.

5.2.1.1 PH_DC_ALLOCATE.request

This service primitive defines the request for access to a particular data channel on the AV media. The semantics of this primitive are as follows:

PH_DC_ALLOCATE.request (medium)

The result of this request is a physical signaling connection from the application layer to the medium requested. This connection is assumed to meet all of the two way data transfer requirements of the application.

5.2.1.2 PH_DC_CONFIRM.indication

This service primitive provides the application layer with confirmation that contact has been established with the data channel. The semantics of this primitive are as follows:

PH_DC_CONFIRM.indication(status)

The "status" parameter may take on one of the following values: "READY", "NOT-READY", or "PH_FAILURE". The PH_DC_CONFIRM.indication service primitive is sent from the Physical Layer to the application layer each time a change in the status parameter occurs.

The status value of "READY" indicates contact with the physical data channel is established as requested and is provided as a result of a data channel allocate request.

The status value of "NOT-READY" indicates connection to the data channel has not been made or has been broken per an allocate request.

A status value of "PH_FAILURE" indicates the Physical Layer has detected its own failure. The ability to detect and report Physical Layer failures is optional. This parameter value will always be available, but implementations which do not include a Physical Layer failure capability will simply never return a status value of "PH_FAILURE".

5.3 Control Channel Signal Characteristics

This Section describes the encoding, data rate, and symbol definition for AV Bus control channel signaling over the AV bus network.

5.3.1 Control Channel Signal Encoding

The TP control channel will employing two differential bipolar signal levels to encode the CEBus symbols "1", "0", "EOF", and "EOP". The two signal levels are used to represent the two media states of SUPERIOR and INFERIOR. An INFERIOR state is represented by the presence of nominal -0.6V differential level present on the CC pair. The SUPERIOR state is represented by the presence of a nominal +0.65V differential level on the CC pair.

The encoding of the symbols is strictly related to the time the INFERIOR or SUPERIOR state remains on the media, not whether the INFERIOR or SUPERIOR state is used. Any symbol can be defined by either a SUPERIOR or INFERIOR state.

The "1" symbol is represented by the shortest interval of the SUPERIOR or INFERIOR state, the "0" is twice the interval of the "1", the "EOF" is three intervals, and the "EOP" is four intervals. Figure 5.2 shows an example of this encoding. The voltage levels shown are measured from the CC+ terminal with respect to the CC– terminal.

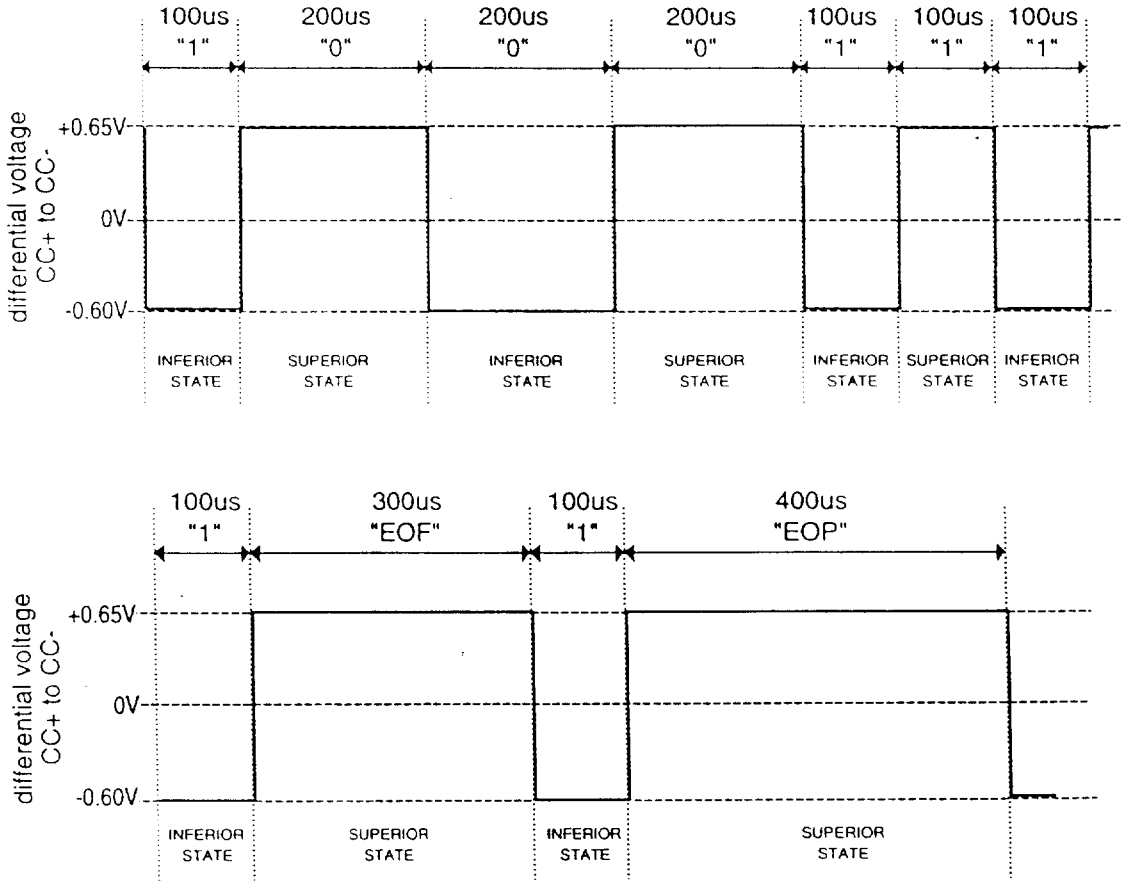

Figure 5.2 AV Encoding Example

5.3.2 Signaling Rate and Symbol Timing

The signaling rate for AV control channel will be 10K ONE bits per second ± 5% over the operating temperature and humidity range of the attached device.

This rate gives the following symbol times for the four AV Bus encoded symbols:

ONE	100 µs	± 5µs
ZERO	200 µs	± 5µs
EOF	300 µs	± 5µs
EOP	400 µs	± 5µs

The symbol time for the shortest symbol (ONE) will be defined as the "unit symbol time" and represents the minimum SUPERIOR or INFERIOR period.

5.5 Control Channel Transmitter Characteristics

The control channel transmitter shall be a balanced driver capable of generating the specified control channel signals onto the CC pair. Only the parameters necessary to ensure compatibility with the control channel receiver are specified in the following sections.

5.5.1 SUPERIOR Output State

Upon reception of M_STATE.request(SUPERIOR), or M_STATE.request(TOGGLE) while in the INFERIOR state, the transmitter will generate the SUPERIOR state. The transmitter shall meet the following requirements for successful SUPERIOR state generation.

While in the SUPERIOR state, the differential output voltage magnitude, Vdif, into the test load shown in Figure 5.4 at the connector of the device, shall be between +0.50V and +0.80V from CC+ with respect to CC- in either position of the switch. The maximum output current during the SUPERIOR state will be limited to +10 mA into a short circuit at the output terminals.

The transmitter will maintain the SUPERIOR state while in the presence of a common mode voltage range of +2V to +7V appearing at the device output terminals with respect to the CMR line.

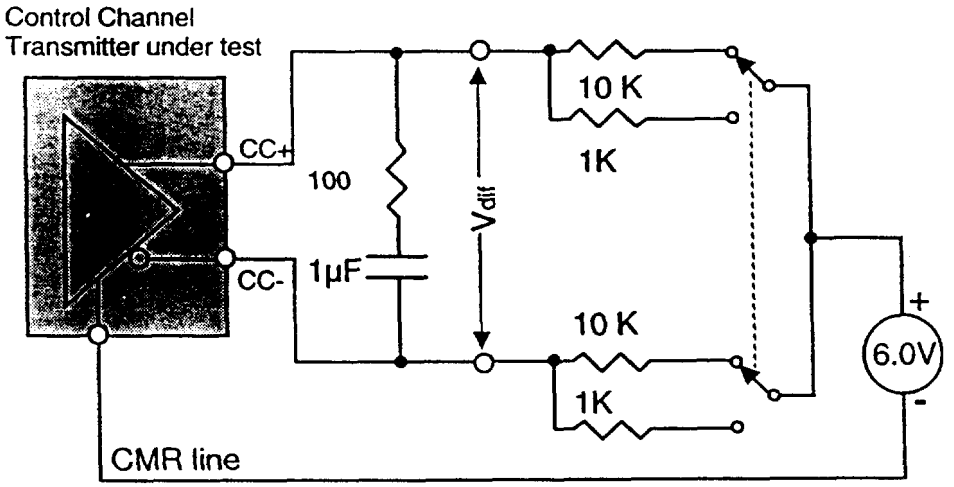

Figure 5.4 Output Driver Test Circuit

5.5.2 INFERIOR Output State

Upon reception of M_STATE.request(INFERIOR), or M_STATE.request(TOGGLE) while in the SUPERIOR state, the transmitter will generate the INFERIOR state. The transmitter shall meet the following requirements for successful INFERIOR state generation.

While in the INFERIOR state, the differential output voltage magnitude, Vdif, into the test load shown in Figure 5.4 at the connector of the device shall be between -0.50V and –0.80V from CC+ with respect to CC-. The maximum output current during the INFERIOR state will be limited to -0.45 mA into a short circuit at the output terminals.

The transmitter will maintain the INFERIOR state while in the presence of a common mode voltage range of +2V to +7V appearing at the device output terminals with respect to the CMR line.

5.5.3 Timing

The output voltage signal shall remain within the timing and voltage levels depicted in figure 5.5 and meet the following timing specifications:

Parameter	Description	Min.	Typ.	Max.	Units
tPER	SUPERIOR State Period	95	100	105	µs
tI2S	SUPERIOR transition	1.6	3.2	6.4	µs
tS2I	INFERIOR transition	1.6	3.2	6.4	µs

Where: tPER : Superior state time for unit symbol time.
tI2S: Inferior to Superior transition time. Time to reach +0.50 volts from the Inferior voltage level on the bus.
tS2I: Superior to Inferior transition time. Time to transition from -0.50 volts to the Inferior voltage level on the bus.

These conditions are measured while driving the test load of Figure 5.4.

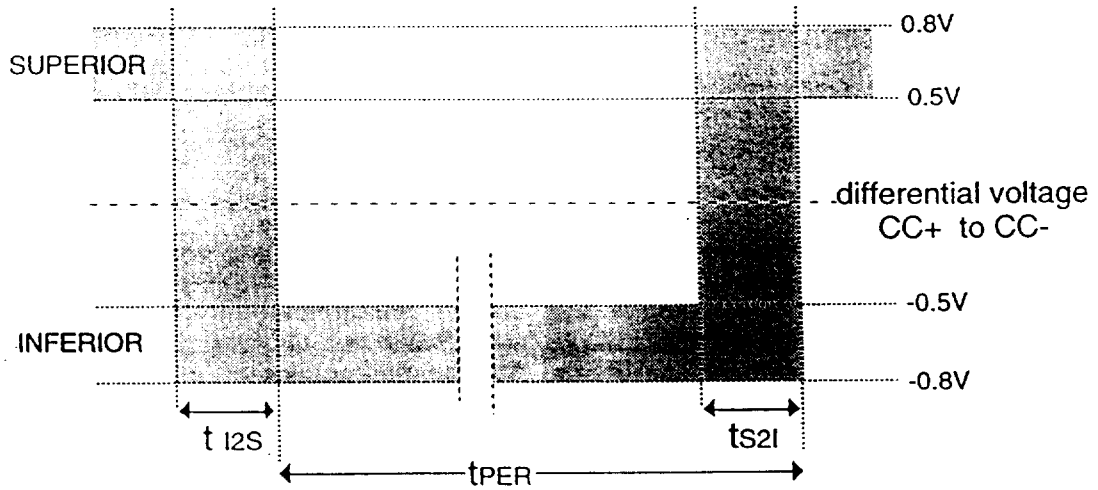

Figure 5.5 Output Waveform timing/voltage envelope

5.5.4 Common Mode Output Voltage

The magnitude of the common mode output voltage (Vcm) generated by the driver in either the SUPERIOR or INFERIOR state, measured between the midpoint of a test load shown in Figure 5.6, shall be +6.0 volts ±TBD volts.

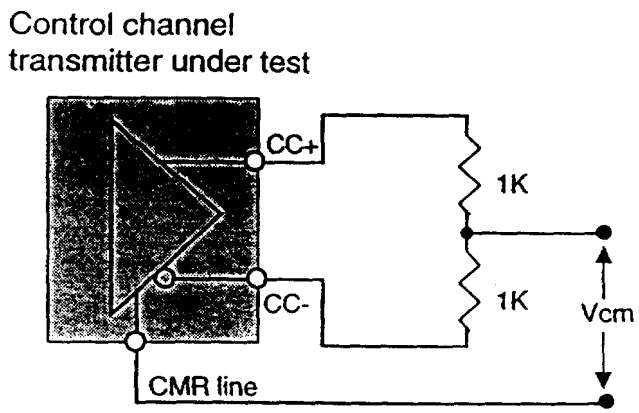

Figure 5.6 Common Mode Output Test Circuit

5.5.5 Fault Tolerance

The control channel transmitter, while in either the INFERIOR or SUPERIOR state, shall tolerate the application of each of the following faults indefinitely; and after the fault condition is removed, the operation of the transmitter shall not be impaired. In addition, the magnitude of the output current from the transmitter under any of the fault condition specified shall not exceed ±10 mA.

- Output terminals shorted together (not touching control channel lines)
- Output terminals shorted together and shorted to either side of the control channel lines
- Output terminals shorted together and shorted to the CMR line.
- The control channel lines shorted together while the device is properly connected

5.6 Control Channel Receiver Characteristics

The receiver shall permit correct decoding of a bipolar encoded waveform as described in Section 5.3.1 when the receiving interface circuit at the connector of the AV device is driven by an input signal meeting the state recognition requirements described below.

5.6.1 SUPERIOR State Recognition

The receiver will detect the transition to the SUPERIOR state—and report this state via a M_STATE.indicate(INFERIOR) service primitive—if a transition to a differential voltage level of <+0.8V to > +0.5V volts, CC+ to CC-, occurs within 6.4µs and remains <+0.8V and >+0.5V for 25µs ± 5µs (1/4 unit symbol time). Recognition will occur in the presence of a common mode voltage range of +2V to +7V appearing at the receiver input terminals with respect to the CMR line.

5.6.2 INFERIOR State Recognition

The receiver will detect a transition to the INFERIOR state—and report this transition via a M_STATE.indicate(SUPERIOR) service primitive—if a transition to a differential voltage level of > -0.5V to < -0.8V, CC+ to CC-, occurs within 6.4µs and remains > -0.5V to < –0.8V for 25µs ± 5µs (1/4 unit symbol time). Recognition will occur in the presence of a common mode voltage range of +2V to +7V appearing at the receiver input terminals with respect to the CMR line.