TERRESTRIAL ATV TEST DATA SUMMARY (CHAN 6)

Close-In Grid and Radial Measurements

ATV SIGNAL												
SITE NO	DATE	TRANSMITTER POWER (dB)	TAP ENERGY (dB)	AZIMUTH (DEG)	SIGNAL LEVEL (dBm)	PILOT LEVEL (dBm)	COMB FILTER*	CO-CH FLD STRGH (dBuV/m)	FIELD STRENGTH (dBuV/m)	NOISE FLOOR (dB)	C/N (dB)	MARGIN (dB)
R185S16	06/30/94	6	-17.4	85	-45.3	-54.8	0	21.5	33.2	-59.1		0
R215-1	07/11/94	0	-17.6	290	-30.7	-41.9	0	13.7	64	-70.4	14.6	35.1
R215-2	07/11/94	0	-16.7	330	-30.2	-41.6	0	24.6	70.4	-71.7	15.2	42.3
R215-3	07/11/94	0	-19.5	145	-34.3	-45.7	1	35.6	61.3	-64.7	15.8	25.6
R215-4	07/11/94	0	-18	245	-32.2	-43.3	1	39.6	67.4	-60.6	14.5	28.9
R215-5	07/11/94	0	-16.6	310	-32.6	-44.1	0	36.6	64	-58.9	14.8	23.5
R215-6	07/11/94	0	-17.5	340	-38.3	-49.5	1	21.6	50.3	-65.6	14.8	12.5
R215-7	07/07/94	0	-17.2	35	-43.1	-53.7	0	21.8	55.7	-65.7	14.3	22.3
R215-8	07/07/94	0	-17.7	35	-53.4	-64.5	0	27.8	52.4	-66.4	11.3	22.7
R215-9	07/07/94	0	-17.8	230	-57	-68.2	0	29.8	49.8	-66.3	8.8	22.5
R215S10	07/07/94	6	-18	225	-61.5	-73.9	0		47.3	-66.5		0
R215S11	07/07/94	6	-16.6	155	-57	-68.4	0		42.8	-70.5	8.9	19.6
R215S12	07/06/94	6	-18.7	45	-53	-63.8	0	21.7	39.7	-69	14.1	9.9
R215S13	07/06/94	0	-19.7	310	-54.1	-66.3	0	23.7	44.6	-66	10.9	15
R215S14	07/06/94	0	-14.6	30	-55.2	-66.2	0	27.7	44.5	-68.8	12.8	15.8
R215S15	07/06/94	0	-19.1	30	-51.9	-63.5	1	30.7	44.8	-65.9	13.3	12.7
R215S16	07/06/94	6	-17.5	20	-47.4	-58.7	1	25.7	37.3	-64.9	14.4	3.1
R270-1	05/23/94	0	-18.1	200	-29.5	-39.9	0	32.4	72.9	-63.7	15.3	36.9
R270-2	05/23/94	0	-17.9	55	-30.9	-40.7	1	37.4	64.5	-64.9	15.7	29.3
R270-3	05/24/94	6	-19.2	130	-22	-32.9	0	37.6	59.6	-50.4	15	10.4
R270-4	05/24/94	0	-22.4	185	-27.8	-39.4	1	43.6	58.8	-48.1	15	7.3
R270-5	05/24/94	0	-22.2	340	-28.5	-40.4	1	37.6	60.1	-56.4	14.7	17.2
R270-6	05/24/94	6	-20.2	343	-22.4	-32.3	0	43.6	65.2	-52.9	16	17.5
R270-7	05/25/94	0	-20.9	270	-29.5	-40.9	0	31.4	54.9	-57.5	15.3	12.6
R270-8	05/25/94	0	-19.3	260	-34.8	-46.2	0	25.4	49.6	-53.9	15.4	3.7
R270-9	05/25/94	0	-18.1	70	-29.4	-40.2	1	31.4	55	-54.9	15.3	10.2
R270S10	05/25/94	0	-19.2	347	-35	-46.2	1	31.4	49.4	-54.8	14.4	5.4
R270S11	05/26/94	0	-19.7	23	-37	-33.7	1	30.6	47.6	-57.1	14.6	5.5
R270S12	05/26/94	6	-18.3	255	-41.5	-53.2	1	33.6	37.1	-53.9		0
R270S13	05/26/94	6	-20.6	80	-31.5	-42.9	1	36.6	47.1	-45.9	14.1	0
R270S14	05/26/94	6	-15.1	29	-38.9	-51.2	1	38.6	39.7	-51.5		0
R270S15	05/26/94	6	-17.7	93	-38	-50.5	0	36.6	40.6	-48.5		0
R270S16	05/26/94	6		6				48.6		-30.2		0
R300-1	05/31/94	0	-20.8	340	-26.3	-37.2	0	35.5	72.2	-66.8	15.1	39.4

Note : The ATV field strength and margin values were reduced by 6 dB when the transmitter power was +6 dB.

TERRESTRIAL ATV TEST DATA SUMMARY (CHAN 6)

Close-In Grid and Radial Measurements

ATV SIGNAL												
SITE NO	DATE	TRANSMITTER POWER (dB)	TAP ENERGY (dB)	AZIMUTH (DEG)	SIGNAL LEVEL (dBm)	PILOT LEVEL (dBm)	COMB FILTER*	CO-CH FLD STRGH (dBuV/m)	FIELD STRENGTH (dBuV/m)	NOISE FLOOR (dB)	C/N (dB)	MARGIN (dB)
R300-2	06/04/94	0	-20.3	15	-30.7	-42.1	1	35.5	66.8	-64.1	15.5	30.9
R300-3	06/04/94	0	-18.3	125	-26.3	-37.6	0	32.5	65.2	-65.9	15	31.6
R300-4	06/04/94	0	-18.4	280	-26.6	-39.1	0	28.5	58.9	-57.2	15.5	16.1
R300-5	06/04/94	0	-18	340	-28.4	-39	1	32.5	56.1	-51.6	13.8	9.4
R300-6	06/06/94	0	-22.2	335	-39.3	-50.8	1	36.6	62.3	-72.6	15.7	34.6
R300-7	06/06/94	0	-17.9	316	-45	-56	0		59.6	-72.9	14.7	33.2
R300-8	06/07/94	0	-19.4	105	-41.3	-49.7	0	26.6	57.3	-66.6	14.2	25.1
R300-9	06/07/94	0	-18.8	26	-40.6	-53.2	0	3[illegible]6	61	-69.9	14	32.3
R300S10	06/07/94	0	-19.8	215	-46.7	-56	0	20.6	48.9	-69.4	13.6	20.1
R300S11	06/07/94	0	-19.3	106	-46.9	-57.6	1	27.6	49.7	-65.4	10.1	20.4
R300S12	06/07/94	0	-20.2	95	-39.8	-51.1	1	24.6	53.8	-67.5	15	21.7
R300S13	06/08/94	0	-18	125	-47	-59.2	1	29.5	52.5	-62.4	6.5	23.9
R300S14	06/08/94	0	-19.8	302	-41	-52	0	21.5	55.5	-63.6	11.4	23.2
R300S15	06/08/94	0	-20.4	300	-43.9	-53.1	0	23.5	46.6	-60.9	8.9	14.1
R300S16	06/08/94	0	-14.6	195	-45.5	-59.4	0	[illegible].5	47	-59	3.8	17.7
R305-1	05/31/94	0	-17.5	310	-25.1	-37	0		66.4	-60.7	16.1	26.5
R305-2	06/04/94	0	-21	185	-26.2	-37.1	1	43.5	66.3	-53.5	15.7	19.6
R305-3	06/04/94	0	-20.3	26	-25.5	-37.2	1	33.5	61	-52.5	14.5	14.5
R305-4	06/04/94	0	-19.3	102	-30	-37.3	1	40.5	64.5	-56.7	11.2	25.5
R305-5	06/06/94	0	-18.3	138	-38.5	-50.2	0	31.6	62.1	-53.5	14.6	16.4
R305-6	06/06/94	0	-17.3	286	-50.9	-63.5	1	40.6	50.7	-65.1	11.2	20
R305-7	06/06/94	0	-17.4	245	-48.8	-58.4	0		57.8	-73	14.1	32.1
R305-8	06/15/94	0	-18	280	-40	-51	1	26.7	52.7	-60.7	11.1	17.6
R305-9	06/15/94	0	-18	185	-36.7	-49	1	38.7	58	-55.6	14.6	14.3
R305S10	06/14/94	6	-14.5	185	-46.8	-59.1	0	27.5	36.7	-64.7	12.1	4.8
R305S11	06/14/94	6	-21.4	185	-41.2	-53.2	0	24.5	47.3	-58.9	8.5	13.2
R305S12	06/14/94	0	-19.3	55	-43.2	-47.9	1	25.5	46.3	-61.7	12.1	11.4
R305S13	06/14/94	6	-18.7	40	-47.9	-60	1	24.5	40.6	-63.3	9	16.4
R305S14	06/10/94	0	-13.1	345	-37.7	-49.1	1	27.6	46.9	-53.4	9.3	6.4
R305S15	06/10/94	6	-15.4	79	-47.7	-62	0	20.6	30.9	-58.8		0.4
R305S16	06/10/94	6	-13.6	0	-41.8	-53.8	0	9.6	36.8	-64.9	15.2	1.9

* 0=Comb Filter Out
1=Comb Filter In

Note : The ATV field strength and margin values were reduced by 6 dB when the transmitter power was +6 dB.

TERRESTRIAL ATV TEST DATA SUMMARY (CHAN 53)

Charlotte Grid

ATV SIGNAL												
SITE NO	DATE	TRANSMITTER POWER (dB)	TAP ENERGY (dB)	AZIMUTH (DEG)	SIGNAL LEVEL (dBm)	PILOT LEVEL (dBm)	COMB FILTER*	CO-CH FLD STRGH (dBuV/m)	FIELD STRENGTH (dBuV/m)	NOISE FLOOR (dB)	C/N (dB)	MARGIN (dB)
C1-1	05/20/94	0	-16.8	216	-28.8	-40.2	0		91.1	-70.3	15.5	51
C1-2	05/20/94	0	-8.5	273	-30.3	-38.4	0		80.6	-70.4	17.7	38.4
C1-3	05/20/94	0	-15.7	30	-28.8	-39.2	0		79.1	-70.3	14.9	39.6
C1-4	05/20/94	0	-21	220	-27.2	-38	0		89.7	-69.9	15	49.7
C1-5	05/20/94	0	-22	227	-29.9	-41.4	0		82	-70.5	15.3	42.3
C1-6	05/20/94	0	-21.2	296	-28.1	-38.9	0		83.8	-70.1	15	44
C1-7	05/20/94	0	-19.6	215	-25.3	-38.8	0		79.6	-70.2	19.6	35.3
C1-8	05/20/94	0	-12.7	355	-28.6	-43.2	0		70.3	-70.2	19.5	26.1
G1A1	05/19/94	0	-18.5	140	-26.7	-38.6	0		79.3	-70	16.7	37.6
G1A2	05/19/94	0	-22.5	180	-28.2	-39.6	0		86.8	-70.2	14.5	47.5
G1A3	05/13/94	0	-19.9	43	-28.8	-40.5	0		89.2	-71.2	16.1	49.3
G1A4	05/12/94	0	-20	125	-28.6	-40.4	0		93.2	-70.4	15.4	52.4
G1A5	08/11/94	0	-17.8	345	-25.6	-36.3	0		84.8	-70.5	18.7	40.2
G1B1	05/19/94	0	-21.7	340	-26.2	-37	0		82.8	-69.9	16.5	41.2
G1B2	05/19/94	0	-19.5	120	-27.4	-37.8	0		81.6	-70.1	15.9	40.8
G1B3	05/17/94	6	-3.6	50	-28.7	-40.9	0	26.3	60.6	-70.8	42.1	0
G1B4	05/12/94	0	-17.3	132	-28.3	-40.8	0		74.5	-71.3	16.9	33.1
G1B5	08/11/94	0	-17.6	250	-27.8	-38.9	0		90.6	-70.5	17.3	47.4
G1C1	05/19/94	0	-16.9	25	-28.1	-39.1	0		76.9	-70	17.7	34.2
G1C2	05/18/94	0	-11.4	117	-34.4	-46.1	0		60.7	-70.9	18.2	18.3
G1C3	05/17/94	0	-17.9	90	-27.4	-38.4	0		77.9	-70	14.6	38
G1C4	05/12/94	0	-16.6	352	-29.5	-40.7	0		73.3	-71.2	16.8	31.9
G1C5	08/11/94	0	-13.9	35	-29.5	-39.2	0		78.9	-70.7	17.6	35.6
G1D1	05/19/94	0	-19.8	274	-26.5	-37.6	0		82.5	-70	15.5	42
G1D2	05/18/94	0	-17.4	284	-26	-37.3	0		69.1	-69.8	15	28.8
G1D3	05/18/94	0	-5.6	35	-33.5	-44.1	0		61.6	-70.7	20.2	17
G1D4	05/11/94	0	-20.6	232	-29.5	-41.2	0		88.7	-70.5	15.1	48.9
G1D5	08/11/94	0	-17.3	230	-30.2	-41.3	0		89.2	-70.9	16	47.7
G1E1	05/19/94	0	-23.7	135	-27.2	-38.3	0		86.8	-70.2	16.2	45.8
G1E2	05/18/94	0	-16.4	40	-34.8	-46	0		60.3	-70.9	16.7	19.4
G1E3	05/18/94	0	-8	170	-43.1	-53.9	0		52	-71.2	28.1	0
G1E4	05/11/94	0	-9.9	200	-32	-45	0		63.2	-70.9	18.5	20.4
G1E5	05/17/94	0	-18.1	300	-26.9	-38.4	0		77.4	-70.1	15.2	37

Note : The ATV field strength and margin values were reduced by 6 dB when the transmitter power was +6 dB.

TERRESTRIAL ATV TEST DATA SUMMARY (CHAN 53)

Rock Hill Grid

ATV SIGNAL												
SITE NO	DATE	TRANSMITTER POWER (dB)	TAP ENERGY (dB)	AZIMUTH (DEG)	SIGNAL LEVEL (dBm)	PILOT LEVEL (dBm)	COMB FILTER*	CO-CH FLD STRGH (dBuV/m)	FIELD STRENGTH (dBuV/m)	NOISE FLOOR (dB)	C/N (dB)	MARGIN (dB)
C2-1	07/20/94	0	-14.6	255	-28.8	-38.2	0		69.6	-71	16.1	28.1
C2-2	07/20/94	0	-13.4	25	-31.3	-41.8	0		65.1	-71.1	18.1	21.7
C2-3	07/20/94	0	-20.6	45	-27.2	-38.9	0		79.2	-70.6	15.5	37.9
C2-4	07/20/94	0	-18.4	15	-26.6	-37.8	0		72.8	-70.1	16.6	29.9
C2-5	07/20/94	0	-14.7	100	-26.4	-36.7	0		73	-70.5	17.1	30
C2-6	07/20/94	0	-19	15	-26.5	-36.9	0		70.9	-70.1	14.7	29.9
C2-7	07/20/94	0	-8.7	45	-40.4	-50.7	0		56	-71.3	16.7	14.2
C2-8	07/20/94	0	-4.7	290	-47.3	-55.6	0		49.1	-71.3	18.4	5.6
G2A1	07/12/94	0	-16.2	55	-26.3	-37.2	0		69.6	-70	15.3	28.4
G2A2	07/12/94	0	-8.5	315	-41.5	-55.2	0		54.4	-71	17.2	12.3
G2A3	07/12/94	0	-18.4	12	-27.3	-38.4	0		72.6	-70.4	17.2	29.9
G2A4	07/12/94	0	-9.6	320	-41.8	-52.3	0		54.1	-70.7	17	11.9
G2A5	07/12/94	0	-15.5	230	-27.8	-38.5	0		75.1	-70.4	15	34.6
G2B1	07/12/94	0	-14	320	-29.6	-39.7	0		66.3	-70.7	16	25.1
G2B2	07/12/94	0	-14.9	180	-27.9	-39	0		78	-70.6	15.5	37.2
G2B3	07/14/94	0	-14	10	-29.7	-39.9	0		66.2	-70.7	17.4	23.6
G2B4	07/14/94	0	-16.2	45	-30.5	-41.5	0		65.4	-70.8	15.4	24.9
G2B5	07/14/94	0	-19.1	180	-27.8	-38.8	0		78.1	-70.7	15.3	37.6
G2C1	07/15/94	0	-14	280	-52.4	-62.9	0		43.7	-71.4	16.5	2.5
G2C2	07/15/94	0	-11.1	230	-34.3	-46	0		61.8	-71.4	16	21.1
G2C3	07/14/94	0	-10.4	210	-36.4	-48.9	0		59.5	-71		0
G2C4	07/14/94	0	-16.3	325	-27.6	-38.9	0		79.3	-70.3	15.2	38.5
G2C5	07/14/94	0	-16.5	60	-26.7	-38.2	0		73.2	-70.2	15	32.5
G2D1	07/15/94	6	-99	48	-45.1	-56.9	0		45	-71.7		0
G2D2	07/15/94	0	-14.8	180	-29.4	-40.7	0		66.7	-70.8	15.9	25.5
G2D3	07/15/94	0	-11	350	-33.5	-43.3	0		62.6	-70.6	16.5	20.6
G2D4	07/19/94	0	-15.2	35	-32	-45	0		64.3	-70.9	15.1	23.8
G2D5	07/19/94	0	-18.6	330	-27.3	-38.2	0		75	-70.5	14.9	34.3
G2E1	07/19/94	0	-13.9	340	-49.9	-61.4	0		46.4	-71.2	14.8	6.5
G2E2	07/19/94	0	-12.9	10	-48.9	-59.4	0		47.4	-71.5	15.4	7.2
G2E3	07/19/94	0	-18.1	60	-35.9	-47.8	0		60.4	-71.3	15.1	20.3
G2E4	07/19/94	0	-15.3	25	-26.2	-37.8	0		72.1	-70.3	15.3	30.8
G2E5	07/19/94	0	-14.5	190	-34	-44.7	0		62.3	-71.1	16.1	21

Note : The ATV field strength and margin values were reduced by 6 dB when the transmitter power was +6 dB.

TERRESTRIAL ATV TEST DATA SUMMARY (CHAN 53)

Close-In Grid and Radial Measurements

ATV SIGNAL												
SITE NO	DATE	TRANSMITTER POWER (dB)	TAP ENERGY (dB)	AZIMUTH (DEG)	SIGNAL LEVEL (dBm)	PILOT LEVEL (dBm)	COMB FILTER*	CO-CH FLD STRGH (dBuV/m)	FIELD STRENGTH (dBuV/m)	NOISE FLOOR (dB)	C/N (dB)	MARGIN (dB)
C3-1	07/21/94	0	-17.9	20	-27.7	-40.2	0		76.3	-70.5	18	32.8
C3-2	07/21/94	0	-19.6	250	-27.6	-39.4	0		85.4	-70.6	15.1	44.9
C3-3	07/21/94	0	-20	30	-27.1	-38.6	0		92.9	-70.5	14.9	52.5
C3-4	07/21/94	0	-20.8	345	-28.9	-39.6	0		88.1	-71.1	15.1	48.1
C3-5	07/21/94	0	-15.5	150	-28.1	-39.6	0		70.9	-70.9	15.6	30.2
R050-1	06/09/94	0	-21.3	118	-27.8	-38.2	0		91	-70.7	15.2	50.7
R050-2	06/09/94	0	-17.6	115	-30.4	-40.7	0		71.4	-70.9	15.3	31.2
R050-3	06/09/94	0	-19	111	-29.1	-40.9	0		72.7	-70.6	15.8	31.7
R050-4	06/09/94	0	-18.4	5	-28.5	-39.1	0		74.3	-70.8	15.3	34
R050-5	06/09/94	0	-17.5	121	-31.5	-41.8	0		64.3	-71.2	16.1	23.6
R050-6	06/09/94	0	-19.9	230	-31	-40.9	0		64.8	-71.1	15.7	24.4
R050-7	06/09/94	0	-21.3	340	-28.3	-40.6	0		70.5	-70.7	15.5	29.9
R050-8	06/17/94	0	-17.6	276	-40.1	-49.7	0		55.6	-71.4	15.3	16
R050-9	06/17/94	0	-19.7	120	-42.1	-53.6	0		53.6	-71.5	15.2	14.2
R050S10	06/17/94	0	-20.3	180	-28.4	-39.3	0		69.3	-70.8	14.4	30
R050S11	06/17/94	0	-14.2	65	-52.7	-63.1	0		43	-71.4	17.2	1.5
R050S12	06/17/94	0	-20.8	85	-36.5	-47	0		59.2	-71.3	15.1	19.7
R050S13	06/16/94	0	-19.9	196	-41.2	-52	0		55.1	-71.7	14.9	15.6
R050S14	06/16/94	6	-4.8	30	-65.8	-77.9	0		24.5	-71.8		0
R050S15	06/16/94	6	-15	320	-55.9	-65.6	0		34.4	-71.7		0
R050S16	06/16/94	6	-10.3	280	-59	-69.4	0		31.3	-71.8		0
R085-1	06/18/94	0	-18	350	-28.5	-40.5	0		72.4	-70.8	14.6	32.7
R085-2	06/18/94	0	-18.9	160	-27.7	-39	0		81.2	-70.5	15.2	40.6
R085-3	06/18/94	0	-21.3	5	-35.7	-46.6	0		60.2	-71	15.3	20
R085-4	06/18/94	0	-17.2	60	-41.6	-52.7	0		54.3	-71.4	15.9	13.9
R085-5	06/18/94	0	-18.4	130	-35	-45.8	0		60.9	-71.2	15.9	20.3
R085-6	06/18/94	0	-17.5	340	-37.2	-48.3	0		58.7	-71.3	15.5	18.6
R085-7	06/18/94	0	-23.1	320	-27.7	-39	0		77.2	-70.6	16.3	35.6
R085-8	06/20/94	0	-18.4	0	-37.7	-48.2	0		58.5	-71.4	16.4	17.3
R085-9	06/20/94	0	-13.2	265	-52.2	-62.7	0		44	-71.6	16.4	3
R085S10	06/21/94	0	-12.6	305	-51.3	-63.1	0		45.1	-71.5	16.9	3.3
R085S11	06/21/94	0	-18.8	20	-42.1	-54.6	0		54.3	-71.5	15.3	14.1
R085S12	06/21/94	0	-15.4	300	-52.5	-66.6	0		43.9	-71.6	15.7	3.4
R085S13	06/21/94	0	-8.5	80	-47.8	-58.3	0		48.6	-71.7	16.2	7.7

Note : The ATV field strength and margin values were reduced by 6 dB when the transmitter power was +6 dB.

TERRESTRIAL ATV TEST DATA SUMMARY (CHAN 53)

Close-in Grid and Radial Measurements

ATV SIGNAL												
SITE NO	DATE	TRANSMITTER POWER (dB)	TAP ENERGY (dB)	AZIMUTH (DEG)	SIGNAL LEVEL (dBm)	PILOT LEVEL (dBm)	COMB FILTER*	CO-CH FLD STRGH (dBuV/m)	FIELD STRENGTH (dBuV/m)	NOISE FLOOR (dB)	C/N (dB)	MARGIN (dB)
R085S14	06/21/94	0	-20.3	300	-40.3	-51.2	0		56.1	-71.7	15.7	15.7
R085S15	06/21/94	0	-20	165	-31.5	-42.9	0		64.9	-71.6	15.9	24.2
R085S16	06/21/94	0	-15.8	295	-52.4	-64.4	0		44	-71.9	14.7	4.8
R110-1	06/22/94	0	-20.5	355	-27.8	-39.1	0		81	-70.9	16	39.1
R110-2	06/22/94	0	-19.4	20	-28.7	-39	0		81.1	-71	15	40.3
R110-3	06/22/94	0	-20.5	192	-27.9	-38.9	0		83.9	-70.8	15	42.9
R110-4	06/22/94	0	-18.9	290	-27.8	-38.3	0		79	-70.5	14.9	37.8
R110-5	06/22/94	0	-20.3	42	-27.8	-38.6	0		73	-70.8	15.2	31.8
R110-6	06/28/94	0	-20.2	255	-28.6	-39.8	0		82.1	-70.6	15.1	41.9
R110-7	06/28/94	0	-17.1	85	-42.8	-53	0		52.9	-71.5	15.6	13.1
R110-8	06/28/94	0	-23.3	285	-27.1	-38.2	0		73.6	-70.5	15.6	32.8
R110-9	06/28/94	0	-16.6	160	-48.5	-58.2	0		47.2	-71.4	15.7	7.2
R110S10	06/24/94	6	-16.2	290	-43	-54.3	0		47.1	-71.4	24.2	0
R110S11	06/24/94	0	-19.7	280	-26.6	-37.2	0		75.5	-70.3	15.8	33.9
R110S12	06/24/94	0	-16.9	340	-33.8	-42.6	0		62.3	-71.2	16.4	21
R110S13	06/24/94	6	0	150	-55.7	-65.5	0		34.4	-71.2		0
R110S14	06/23/94	0	-14.1	350	-48.7	-58.4	0		47.5	-71.2	18.3	4.2
R110S15	06/23/94	0	-17.1	200	-50.3	-60.2	0		45.9	-71.4	17	4.1
R110S16	06/23/94	0	-21.5	0	-52.5	-63.7	0		43.7	-71.8	17.8	1.5
R185-1	06/29/94	0	-21.1	110	-30.2	-43	0		72.5	-70.2	24.8	22.2
R185-2	06/29/94	0	-10.3	92	-30.7	-40.3	0		65	-70.5	21.3	18.5
R185-3	06/29/94	0	-16.3	205	-29.1	-38.9	0		79.6	-70.3	16.3	37.9
R185-4	06/29/94	0	-21	330	-28.4	-38	0		74.3	-70.6	15.5	33.7
R185-5	06/29/94	0	-11.9	80	-29.1	-39.2	0		66.6	-70.7	18.6	23
R185-6	07/01/94	0	-16.1	315	-29.7	-40.6	0		66	-70.3	16.5	24.1
R185-7	07/01/94	0	-12.4	110	-37.8	-50.3	0		57.9	-70.9	15.4	17.7
R185-8	07/01/94	0	-21.2	215	-27.4	-39.1	0		69.3	-70.1	15	28.7
R185-9	07/05/94	0	-18.5	65	-31.6	-42.4	0		64.2	-70.6	15.2	23.8
R185S10	07/05/94	0	-18.8	70	-36.4	-48.4	0		59.4	-70.7	15	19.3
R185S11	07/05/94	0	-22.1	105	-31.4	-43.2	0		64.4	-70.8	15.6	23.8
R185S12	07/05/94	0	-22.7	270	-37.5	-49.1	0		58.3	-70.8	15.2	18.1
R185S13	06/30/94	0	-19	295	-28.2	-39.4	0		67.4	-70.9	15.8	26.9
R185S14	06/30/94	0	-16.7	225	-47.3	-58.2	0		48.3	-71.1	14.4	9.4
R185S15	06/30/94	0	-18.9	155	-40.4	-52	0		55.2	-70.4	15.7	14.3

Note : The ATV field strength and margin values were reduced by 6 dB when the transmitter power was +6 dB.

TERRESTRIAL ATV TEST DATA SUMMARY (CHAN 53)

Close-in Grid and Radial Measurements

ATV SIGNAL												
SITE NO	DATE	TRANSMITTER POWER (dB)	TAP ENERGY (dB)	AZIMUTH (DEG)	SIGNAL LEVEL (dBm)	PILOT LEVEL (dBm)	COMB FILTER*	CO-CH FLD STRGH (dBuV/m)	FIELD STRENGTH (dBuV/m)	NOISE FLOOR (dB)	C/N (dB)	MARGIN (dB)
R185S16	06/30/94	6	-7.2	85	-62.3	-75.4	0		27.3	-71		0
R215-1	07/11/94	0	-15.3	290	-26.3	-37.3	0		72.7	-70.3	15.2	31.8
R215-2	07/11/94	0	-16.4	330	-27.1	-38.7	0		78.9	-70.3	15.4	37.8
R215-3	07/11/94	0	-13	160	-29.1	-39.1	0		74.9	-68.2	15.2	31.9
R215-4	07/11/94	0	-18.3	245	-26.7	-38.4	0		76.3	-70.2	16.6	33.9
R215-5	07/11/94	0	-16.3	300	-28.2	-40.1	0		84.8	-70.6	15.5	43.9
R215-6	07/11/94	0	-18.8	340	-43.4	-55.4	0		52.6	-71	15.3	12.3
R215-7	07/07/94	0	-13	40	-31.6	-42	0		64.3	-70.4	16.3	22.5
R215-8	07/07/94	0	-16.6	40	-31.3	-42.6	0		64.6	-70.5	15.8	23.4
R215-9	07/07/94	0	-13.8	250	-39.3	-49.2	0		56.6	-70.9	16.2	15.4
R215S10	07/07/94	0	-16.4	260	-44.5	-57.2	0		51.4	-70.2	14.7	11
R215S11	07/07/94	0	-8.1	175	-49.9	-61	0		46	-71.2	15.9	5.4
R215S12	07/06/94	0	-16.5	45	-38	-48.9	0		57.9	-71.3	15.5	17.8
R215S13	07/06/94	0	-16.4	310	-31.3	-42.4	0		64.6	-70.8	15.7	23.8
R215S14	07/06/94	0	-18.5	15	-44.1	-55.3	0		51.8	-70.9	15.6	11.2
R215S15	07/06/94	0	-18.8	30	-36.7	-48.3	0		59.2	-70.9	14.3	19.9
R215S16	07/06/94	6	-11	45	-57.6	-67.8	0		32.3	-70.9		0
R270-1	05/23/94	0	-24	200	-26.7	-37.2	0		84.7	-70.1	14.6	44.8
R270-2	05/23/94	0	-22.6	55	-26.4	-37.3	0		78	-70.4	15.1	37.9
R270-3	05/24/94	0	-23.9	155	-27.6	-38	0		72.7	-70.5	15.7	32.2
R270-4	05/24/94	0	-21.4	190	-25.7	-37.2	0		78.6	-69.8	14.7	38.4
R270-5	05/24/94	0	-22.5	335	-26	-36.5	0		83.3	-70	15.4	42.6
R270-6	05/24/94	0	-18.5	350	-27.1	-38.3	0		76.2	-70.5	15.6	35.8
R270-7	05/25/94	0	-24.2	265	-31.1	-43	0		70.6	-71	15.9	30
R270-8	05/25/94	0	-21.5	270	-32.2	-43.6	0		63.5	-71.3	15.4	23.7
R270-9	05/25/94	0	-21	55	-26	-38.4	0		69.7	-70.1	16.2	27.9
R270S10	05/25/94	0	-15.9	347	-41.6	-52.2	0	20.7	54.1	-69.8	18.8	9.4
R270S11	05/26/94	6	-10.4	15	-44.9	-54.3	0	20.4	44.5	-71.1	19.9	0.3
R270S12	05/26/94	6	-18.5	260	-51.9	-62.2	0	12.4	37.5	-71.7	16.7	0
R270S13	05/26/94	0	-21.4	80	-30.1	-40.7	0	14.4	65.3	-71.2	17.1	24
R270S14	05/26/94	0	-17.8	355	-47.3	-59.5	0		48.1	-70	17.4	5.3
R270S15	05/26/94	0	-21.1	95	-51.6	-63.2	0		43.8	-71.6	15.7	4.3
R270S16	05/26/94	6	-16.2	6	-37.7	-48.4	0		51.7	-60.1	17.8	0
R300-1	05/31/94	0	-23.1	340	-28.1	-39.4	0		95.2	-70.4	15.1	55.2

Note : The ATV field strength and margin values were reduced by 6 dB when the transmitter power was +6 dB.

TERRESTRIAL ATV TEST DATA SUMMARY (CHAN 53)

Close-In Grid and Radial Measurements

ATV SIGNAL												
SITE NO	DATE	TRANSMITTER POWER (dB)	TAP ENERGY (dB)	AZIMUTH (DEG)	SIGNAL LEVEL (dBm)	PILOT LEVEL (dBm)	COMB FILTER*	CO-CH FLD STRGH (dBuV/m)	FIELD STRENGTH (dBuV/m)	NOISE FLOOR (dB)	C/N (dB)	MARGIN (dB)
R300-2	06/04/94	0	-19.7	15	-29.9	-41.5	0		75.7	-70.8	14.6	36.3
R300-3	06/04/94	0	-16.8	127	-27.7	-38.2	0		72.9	-70.6	14.8	33.1
R300-4	06/04/94	0	-21.1	272	-28.5	-40.2	0	21.6	70.1	-70.6	15	30.1
R300-5	06/04/94	0	-17.8	307	-31.4	-43.9	0		64.2	-71.2	16	23.8
R300-6	06/06/94	0	-15.6	335	-35.1	-49.3	0		60.6	-71.2	17.3	18.8
R300-7	06/06/94	0	-21.3	296	-27.5	-38.8	0		72.2	-70.5	15.6	31.4
R300-8	06/07/94	0	-17.8	115	-27.1	-36.1	0	27	68.9	-69.2	15.4	26.7
R300-9	06/07/94	0	-21.2	40	-29.3	40.8	1	52	78.7	-60.1	15.3	27.5
R300S10	06/07/94	0	-18.6	216	-4[illegible]	-55.3	1	32	52.3	-65.4	15.5	6.[illegible]
R300S11	06/07/94	0	-19.8	130	-4[illegible]	-5[illegible]	0	25	55.9	-69.8	15.4	14.3
R300S12	06/07/94	0	-21.1	80	-28.5	-39.[illegible]	0	34	72[illegible]	-68.8	15.4	29.9
R300S13	06/08/94	0	-21.8	105	-28.2	-39	0	21	70.8	-70.5	15.5	29.8
R300S14	06/08/94	0	-22.8	285	-27.8	-39.3	0	27	74.2	-69.6	15	32.8
R300S15	06/08/94	0	-22.5	276	-37.1	-48.3	0	37	58.9	-71.4	14.3	20
R300S16	06/08/94	0	-17.9	179	-43.3	-54.5	0		52.7	-71.4	17.4	10.7
R305-1	05/31/94	0	-16.5	286	-27.9	-40	0		67.4	-70.7	24.4	18.4
R305-2	06/04/94	0	-13.1	95	-27.3	-37.8	0		68.3	-70.4	16.4	26.7
R305-3	06/04/94	0	-22.8	23	-27.6	-38.8	0		83	-70.6	15.1	42.9
R305-4	06/04/94	0	-14.4	103	-28.3	-38.9	0		76.3	-70.8	15.2	36.3
R305-5	06/06/94	0	-12	105	-34.9	-46.2	0	30.7	60.8	-70.7	16.1	19.7
R305-6	06/06/94	0	-17.1	270	-42.7	-53	0		53	-71.1	16.5	11.9
R305-7	06/06/94	0	-25.9	240	-29.8	-40.7	0		65.9	-70.8	15	26
R305-8	06/15/94	0	-18.2	295	-41.6	-52.5	0	14.9	54.3	-71.1	23.4	6.1
R305-9	06/15/94	0	-2[illegible]	190	-27.1	-38.2	0	35.9	78.8	-69.2	15.6	36.5
R305S10	06/14/94	0	-2[illegible]	190	-40.8	-52.1	0	23.7	54.9	-70.5	15.4	14.3
R305S11	06/14/94	0	-18.4	225	-38.7	-50.3	0	37.7	57	-68.9	15	15.2
R305S12	06/14/94	0	-24	55	-27.4	-38	0	33.7	68.3	-65.1	14.4	23.3
R305S13	06/14/94	0	-21.9	10	-29.9	-40.8	1	46.7	65.8	-58.1	15.6	12.6
R305S14	06/10/94	6	-16.4	315	-45.2	-57.7	1	36.4	44.2	-62.8	14.5	0
R305S15	06/10/94	6	-14.2	46	-58.3	-68	0	15.4	31.1	-70.8		0
R305S16	06/10/94	6	-8.6	5	-61.5	-77.2	0	20.4	27.9	-70.5		0

* 0=Comb Filter Out
1=Comb Filter In

Note : The ATV field strength and margin values were reduced by 6 dB when the transmitter power was +6 dB.

SECTION II

CABLE SYSTEM FIELD TEST REPORT

CABLE SYSTEM FIELD TEST REPORT

ATV Modem Test

Prepared By

Cable Television Laboratories, Inc.
Alexandria, Virginia

Prepared For

FCC Advisory Committee on Advanced Television Service
System Subcommittee Working Party 2
Field Testing Task Force

September 16, 1994

TABLE OF CONTENTS

1. Introduction and General Comments....4
2. Test Procedure Summary....5
3. Vision Cable of Mecklinburg Results Summary....9
4. Vision Cable of Kannapolis Results Summary....10
5. Vision Cable of Albermarle Results Summary....11
6. Rockingham Cablevision Results Summary....12
7. Monroe Cablevision Results Summary....13
8. Gastonia Cablevision Results Summary....14
9. Vision Cable of Shelby Results Summary....15
10. Charlotte Cablevision Results Summary....16
11. Summary....18

APPENDIX 1....19
- Vision Cable of Mecklinburg....19
  - General System Information....19
  - Test Point A1....20
  - Test Point A2....21
  - Test Point A3....22
  - Test Point A4....23
  - Test Point A5....24
  - Test Point A6....25

APPENDIX 2....26
- Vision Cable of Kannapolis....26
  - General System Information....26
  - Test Point B1....27
  - Test Point B2....28
  - Test Point B3....29
  - Test Point B4....30
  - Test Point B5....31
  - Test Point B6....32

APPENDIX 3....33
- Vision Cable of Albermarle....33
  - General System Information....33
  - Test Point C1....34
  - Test Point C2....35
  - Test Point C3....36
  - Test Point C4....37
  - Test Point C5....38
  - Test Point C6....39
  - Test Point C7....40

APPENDIX 4....41
- Cablevision of Rockingham/Hamlet....41
  - General System Information....41
  - Test Point D1....42
  - Test Point D2....43
  - Test Point D3....44
  - Test Point D4....46
  - Test Point D5....48

APPENDIX 5....49
- Monroe 49
  - General System Information....49
  - Test Point E1....50
  - Test Point E2....51
  - Test Point E3....52
  - Test Point E4....53
  - Test Point E5....55

Test Point E6 57
APPENDIX 6 58
Gastonia 58
General System Information 58
Test Point F1 59
Test Point F2 60
Test Point F3 61
Test Point F4 62
Test Point F5 63
Test Point F6 64
APPENDIX 7 65
Shelby 65
General System Information 65
Test Point G1 66
Test Point G2 67
Test Point G3 68
Test Point G4 69
Test Point G5 70
APPENDIX 8 71
Charlotte 71
General System Information 71
Test Point H1 72
Test Point H2 73
Test Point H3 74
Test Point H4 75
Test Point H5 76
Test Point H6 77
Test Point H7 78
Test Point H8 79
Test Point H9 80
Test Point H10 81

CABLE SYSTEM FIELD TEST REPORT

ATV Modem Test

1. INTRODUCTION AND GENERAL COMMENTS

The Cable portion of the Charlotte N. C. field tests was conducted by Cable Television Laboratories, Inc. (CableLabs) in accordance with the ATV Test Procedures Manual - Field Tests (SSWP2-0601 document). The tests were performed between May 02 and June 10, 1994 at 51 sites on eight Cable Systems, four owned by Time Warner Cable (Cablevision) and four owned by Vision Cable.

The 17.9 Mb/s ATV signal was received off-air by a Zenith 8-VSB receiver, error corrected and combined with a second pseudo-random data stream to represent a second ATV channel and modulated using a 16 VSB modulator. The signal was combined with the normal cable channels and carried 6 dB below the adjacent NTSC channel. Tests were performed at the extremities of the system using normal tap outputs feeding into the receiver after a 100 foot drop wire. Some of the tests included transmission of the ATV signals over microwave and fibre links, where available.

The tests were performed in the CableLabs mobile test van by CableLabs and Zenith representatives. The tests included reference tests of NTSC signals plus the ATV signal. In some instances an over-the-air ATV signal was not available and was replaced by a pseudo-random generator located at the headend. Supplementary tests of the off-air signal (some of them long term - 24 to 72 hours) were performed to ensure an off-air ATV signal could be received and error corrected at the headend locations.

The tests were co-ordinated with the channel 53 broadcast transmitter site and the terrestrial test van to maximize the efficiency of both test groups. Local Cable System personnel assisted in setting up the headend equipment and locating the test points in the field.

We wish to thank the management and staff of the eight Cable Systems for the help they provided in the preparation and conduction of the tests. They were willing to work the long hours necessary to complete the tests and endure the questions from subscribers resulting from the different signals we were putting on the systems. In addition, we wish to thank PBS, Zenith, and the many equipment suppliers who were responsible for the installation and operation of the transmitter site, without which the field tests could not have been performed.

2. TEST PROCEDURE SUMMARY

The broadcast channel 53 signal, either NTSC or ATV, was received at the cable system headend by a Wade Antenna WL 30-83/S, 11 dBi gain log periodic antenna specifically mounted on the tower for the tests. The antennas were mounted sufficiently high on the tower to obtain a line of sight path to the transmitter. The received signal was split two ways with one signal feeding the ATV receiver and the second signal feeding the NTSC receiver. (See Figure 1, p. 3) A 21 dB gain pre-amplifier was inserted ahead of the splitter at two locations (Kannapolis and Shelby) to improve the margins of the received ATV signal.

The received 8-VSB ATV signal was equalized, detected, error corrected and passed to the 16-VSB modulator. A second data stream, representing a second ATV channel was also fed into the 16-VSB modulator. The output of the modulator, representing two ATV channels (a total of 35.8 Mb/s) within 6 MHz was available for insertion on the cable system.

The NTSC signal was received by a Tektronix demodulator with the video output available to an NTSC modulator. A locally generated NTSC video signal was also available to the modulator.

The equipment at the headend was remotely controllable to allow for the selection of one of the NTSC signals, the ATV signal, a test sweep signal or no signal. The signal on the cable system was normally the locally generated NTSC signal. The output levels were set to provide NTSC signals and the sweep signal at the same level as the adjacent cable channel and the ATV signal average power 6 dB below the NTSC average power during sync.

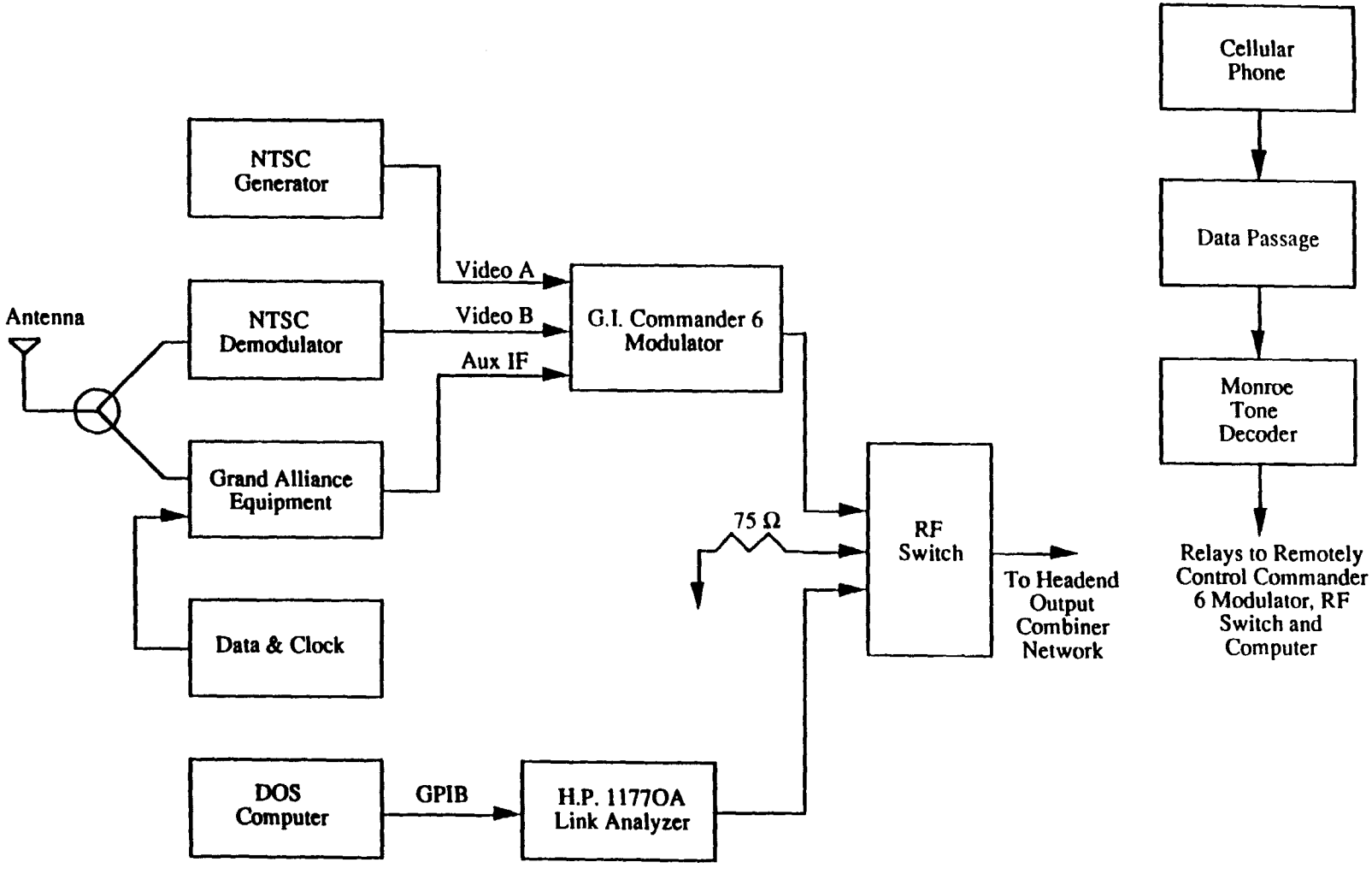

Headend Block Diagram
Figure 1

The channel used on the cable system was determined by availability on the individual systems with some tests performed above the design frequency of the system due to the system being fully loaded.

Test points were selected at the ends of long trunk lines, after microwave and fibre links where available, and as deep into the distribution as possible. A 100' drop cable was attached to a tap and the signal fed to the test van. (See Figure 2, p. 5)

The NTSC test signals, both the one originated at the headend and the one originated at the channel 53 broadcast transmitter site, were passed through a set top converter and fed into a TV set, checked for any visible impairments and graded on the CCIR impairment scale. The visual and aural carrier levels were measured plus the carrier-to-noise, carrier-to-composite triple beat and carrier to other beat product ratios, frequency response and group delay of the test channel. The signal was passed through a sample of home wiring referred to as a house in a box (H.I.A.B.) which simulated a poorly installed subscriber wiring system It consisted of two four-way splitters in cascade with a 10 dB drop amp between the first and second splitter. The seven cables attached to the unused ports of the splitters varied in length from 31.5 to 114 feet and were terminated in shorts. With the 10 dB gain amplifier, the loss of the H.I.A.B. varied from 4 dB at 50 MHz to 7 dB at 300 MHz. The intent of the H.I.A.B test was to determine if the ATV service was available as long as the NTSC service, however poor, was available.

The NTSC signal was replaced with the ATV signal fed directly to the 16-VSB ATV receiver. The average power, signal-to-noise, and bit error ratio (BER) were measured. Gaussian noise was then added to the ignal until the BER reached the threshold level of 3×10^{-6}. The signal-to-noise was remeasured and the margin to threshold was calculated as the difference between the received S/N and the S/N at the white noise error threshold. The signal was then fed through the house in a box and the measurements repeated. The BER measurement consisted of three 20-second intervals for each of the two independent data channels, taking a total of 2 minutes. This test was performed on the signal as received as well as on the signal when white Gaussian noise was added to reach the error threshold for the margin calculation. During this lengthy process (~4 minutes), variations in previously measured signal levels sometimes occurred, thus causing the calculated margins to be of the "worst case" variety.

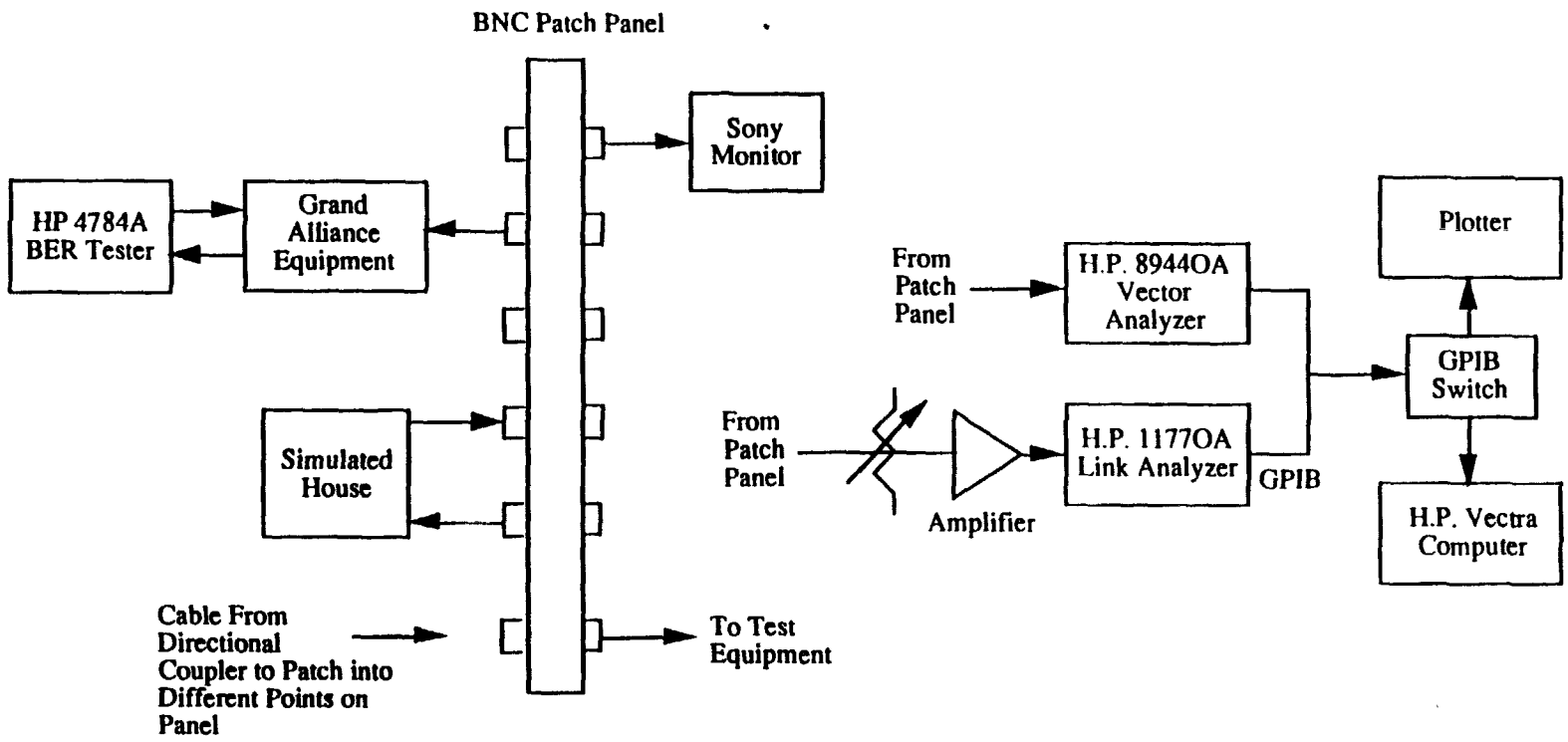

Test Truck Block Diagram
Figure 2

3. VISION CABLE OF MECKLINBURG RESULTS SUMMARY

Test Dates:	1994 May 02 - 04
Test Channel:	31 (262.75 - 268.75 MHz) HRC
System Bandpass:	50 - 450 MHz
Ch 53 ATV Rx Level:	-48 dBm (~18 dB of Margin)
Rx Site:	5.4 miles from transmitter

Note: ATV transmitter operating at reduced power (31.5 Watts) due to inoperative IOT.

Site Number	A1	A2	A3	A4	A5	A6
No of Trunk Amps	0	25	20	12	11	20
No of Line Extenders	0	0	0	2	1	2
Direct NTSC:						
Signal Level dBm	-45.0	-42.5	-40.3	-42.8	-46.5*	-44.5*
Rating	3	4	3	4	4	4+
C/N (6 MHz) dB	42.7	39.2	37.5**	41.2	41.5	35.3**
CTB ratio dB	55	>55.6	48	56	55	49
C/Beat ratio dB	47.6	>44	36.5†	>44	>44	34.8†
Freq. Response dB	0.1	1.2	2.0	0.5	0.8	2.5
Group Delay nsec	48	255	94	34	80	195
H.I.A.B NTSC:						
Signal Level dBm	-62.0††	-45.6	-44.7	-46.1	-50.0*	-47.8*
Rating	3	4	3	4	4-	4
Freq. Response dB	0.3	3.4	3.0	0.7	1.0	0.8
Group Delay nsec	7	285	265	67	75	91
ATV Direct Signal:						
Average power dBm	-50.0	-47.9	-43.9	-47.7	-51.5	-48.7
C/N (6 MHz) dB	39.1	36.2	35.0	37.4	36.7	33.2
Margin dB	10.5	7.6	6.2	8.7	7.9	4.3
ATV Through H.I.A.B:						
Average power dBm	-53.6	-49.4	-47.7	-50.6	-55.0	-52.0
C/N (6 MHz) dB	35.7	35.4	32.2	35.3	33.6	32.1
Margin dB	6.6	6.6	4.4	6.5	4.4	3.0

**Level below FCC minimum level of -44 dBm at end of 100' drop or -47 dBm into a receiver.*
***C/N below FCC specification of 40 dB in 4 MHz (38.3 dB in 6 MHz).*
†C/Beat ratio below FCC specification of 51 dB.
†† Drop amplifier not installed in the H.I.A.B.
Site Number A1 is the headend test point.

ANALYSIS

The NTSC signal level was slightly below FCC level specifications at two locations and carrier-to-noise was below specification at two locations. The ATV signal was received error free at all locations. The margin to threshold ranged from 3.0 dB (H.I.A.B.) to 8.7 dB (direct path) in the system. The ATV signal had 7.6 dB of margin after a 25 amplifier cascade indicating that the ATV transmission system is capable of operating well in long amplifier cascades. Even after a 20 amplifier cascade, with low signal level, C/N and C/Beat, a margin of 4.3 dB existed. (The headend test point, A1, is not included in the analysis.)

4. VISION CABLE OF KANNAPOLIS RESULTS SUMMARY

Test Dates:	1994 May 05 - 06
Test Channel:	20 (156 - 162 MHz) IRC
System Bandpass:	50 - 330 MHz
Ch 53 ATV Rx Level:	-55 dBm (~14 dB of Margin with 21 dB gain preamplifier)
Rx Site:	15.6 miles from transmitter

Note: ATV transmitter operating at reduced power (31.5 Watts) due to an inoperative IOT.

SITE NUMBER	B1	B2	B3	B4	B5	B6
No of Trunk Amps	0	36	34	25	34	32
No of Line Extenders	0	0	1	0	0	1
Direct NTSC:						
Signal Level dBm	-34.7	-36.4	-33.6	-32.0	-32.5	-29.6
Rating	4	4	4	4+	3+	3
C/N (6 MHz) dB	38.9	40.0	41.0	41.3	43.7	33.8*
CTB ratio dB	56	58	56	>66	>67	>66
C/Beat ratio dB	>41	>41	>43	>47	>45	43**
Freq. Response dB	2.5	0.4	1	0.5	0.4	0.5
Group Delay nsec	210	98	52	150	66	135
H.I.A.B NTSC:						
Signal Level dBm	-36.6	-39.0	-36.0	-29.5	-35.0	-32.0
Rating	4	4-	4	4	3	3
Freq. Response dB	2.3	1.4	0.3	0.5	2.4	-
Group Delay nsec	115	156	175	175	215	144
ATV Direct Signal:						
Average power dBm	-40.3	-41.4	-39.5	-38.0	-38.6	-35.6
C/N (6 MHz) dB	39.1	34.9	34.7	37.2	35.0	34.8
Margin dB	11.0	7.0	6.6	8.9	6.9	6.3
ATV Through H.I.A.B:						
Average power dBm	-42.6	-44.7	-42.0	-40.5	-40.9	-37.8
C/N (6 MHz) dB	33.8	33.3	33.9	35.0	33.1	35.3
Margin dB	6.0	5.5	5.9	7.0	5.4	7.3

** C/N below FCC specification of 40 dB in 4 MHz (38.3 dB in 6 MHz).*
*** C/Beat ratio below FCC specification of 51 dB*
Site Number B1 is the headend test point.

ANALYSIS

The ATV receiver worked error free in all test locations and had 6.6 dB of margin after 34 trunk amplifiers and one line extender. The ATV receiver also had a 7.0 dB margin after 32 trunk amplifiers, even though the C/N (33.8 dB) and C/Beat (43 dB) ratio were below FCC specifications. The headend test point ,B1, is not included in the analysis.

5. VISION CABLE OF ALBERMARLE RESULTS SUMMARY

Test Dates:	1994 May 09 - 11
Test Channel:	12 (204 - 210 MHz) IRC
System Bandpass:	50 - 400 MHz
Ch 53 ATV Rx Level:	-48 dBm
Rx Site:	24.2 miles from transmitter

SITE NUMBER	C1	C2 (AML)	C3 (AML)	C4 (AML)	C5	C6 (AML)	C7 (FIBRE)
Number of Trunk Amps	0	0	16	14	38	39	41
Number of Line Extenders	0	0	1	2	2	2	0
Direct NTSC :							
Signal Level dBm	-34.1	-41.8	-36.6	-36.5	-38.7	-34.9	-32.8
Rating	4+	4-	3	3+	3+	3+	3+
C/N (6 MHz) dB	38.5	45.2	45.2	43.1	44.2	40.7	43.4
CTB ratio dB	>70	60	64	65	>66	61	60
C/Beat ratio dB	>48.2	>42	>46	>47	>46	>44	>45
Freq. Response dB	0.1	7*	1.6	0.9	0.4	0.9	0.7
Group Delay nsec	92	258	350	134	110	76	180
H.I.A.B NTSC:							
Signal Level dBm	-36.6	-44.3	-38.9	-39.5	-41.5	-37.1	-35.3
Rating	4	4-	3-	3	3	3	3
Freq. Response dB	0.2	7*	–	1.1	3.5	1.0	0.7
Group Delay nsec	110	220	–	110	200	80	85
ATV Direct Signal:							
Average power dBm	-40.3	-49.0	-40.9	-43.3	-44.5	-41.3	-38.6
C/N (6 MHz) dB	43.3	40.7	38.8	38.0	38.7	34.4	37.4
Margin dB	15.1	12.5	10.1	9.2	9.9	5.9	9.0
ATV Through H.I.A.B:							
Average power dBm	-42.6	-52.3	-43.3	-45.8	-46.9	-43.8	-41.1
C/N (6 MHz) dB	N/A	37.4	38.5	37.2	37.6	34.1	37.6
Margin dB	N/A	8.6	10.2	8.5	9.0	5.4	9.2

Site Number C1 is the headend normal test point and site C2 is the headend AML test point.
** Response exceeds the FCC specification of 4 dB.*

ANALYSIS

The ATV receiver operated without errors at all locations. The longest amplifier-only cascade length of 38 trunk amplifiers and 2 line extenders had a margin of 9.9 dB. The 39 trunk amplifier, 2 line extender cascade after an AML hop had a margin of 5.9 dB. The 41 trunk amplifier cascade after an AM fibre feed had a 9.0 dB margin. The headend test points ,C1 and C2, are not included in the analysis.

6. ROCKINGHAM CABLEVISION RESULTS SUMMARY

Test Dates:	1994 May 12 - 13
Test Channel:	42 (330 - 336 MHz) Standard
System Bandpass:	50 - 350 MHz
Ch 53 ATV Rx Level:	-53 dBm (~10 dB of Margin)
Rx Site:	58.5 miles from transmitter

SITE NUMBER	D1	D2	D3	D4	D5
No of Trunk Amps	1	21	25	30	32
No of Line Extenders	0	0	1	0	0
Direct NTSC:					
Signal Level dBm	-37.5	-38.1	-44.6*	-40.1	-39.2
Rating	4+	2+	3-	3+	3
C/N (6 MHz) dB	51.8	33.1**	42.4	41.1	40.4
CTB ratio dB	>75	>56	>66	>58	>64
C/Beat ratio dB	>53	>35	>44	46	>42
Freq. Response dB	0.5	0.5	3.0	2.2	1.6
Group Delay nsec	20	32	80	63	68
H.I.A.B NTSC:					
Signal Level dBm	-42.5	-44.7	-49.4*	-45.3	-44.0
Rating	3	2+	3-	3-	2
Freq. Response dB	1.0	1.0	3.0	2.4	1.8
Group Delay nsec	21	32	60	54	80
ATV Direct Signal:					
Average power dBm	-43.4	-44.6	-54.0	-48.5	-44.4
C/N (6 MHz) dB	46.5	37.9	35.6	39.4	34.2
Margin dB	17.9	8.6	5.8	10.2	5.9
ATV Through H.I.A.B:					
Average power dBm	-48.6	-49.5	-59.3	-52.2	-49.6
C/N (6 MHz) dB	42.1	37.0	31.0	35.9	33.4
Margin dB	13.4	8.0	1.5	6.2	4.8

* *Level below FCC minimum level of -44 dBm at end of 100' drop or -47 dBm into a receiver.*
** *C/N below FCC specification of 40 dB in 4 MHz (38.3 dB in 6 MHz).*
Site Number D1 is the headend test point.

ANALYSIS

The test channel was located above the highest frequency channel used on the system and where the system was not normally checked for frequency response. At some test points the system response was rolling off at the test channel resulting in reduced levels and margin. A cable system AGC problem at some test points resulted in signal levels varying a few dB over the course of the tests. The ATV receiver worked without errors at all locations and the lowest margin was 5.8 dB from the direct feed and 1.5 dB after the house in a box. This is an example of utilizing the spectrum above the normal system bandwidth for data signals. The headend test point ,D1, is not included in the analysis.

7. MONROE CABLEVISION RESULTS SUMMARY

Test Dates: 1994 May 31 - June 01
Test Channel: 37 (300 - 306 MHz) Standard
System Bandpass: 50 - 300 MHz
Ch 53 ATV Rx Level: -47 dBm (~15 dB of Margin)
Rx Site: 19.6 miles from transmitter

SITE NUMBER	E1	E2	E3 (FIBRE)	E4 (FIBRE)	E5 (FIBRE)	E6
No of Trunk Amps	0	26	25	22	33	29
No of Line Extenders	0	0	1	0	0	0
Direct NTSC:						
Signal Level dBm	-27.4	-35.9	-46.2*	-38.2	-37.3	-39.3
Rating	4+	4	4-	3+	4-	4-
C/N (6 MHz) dB	53.4	47.6	42.3	42.8	44.7	42.8
CTB ratio dB	65	>69	52	61	63	43
C/Beat ratio dB	54	>49	>42	>46	4	65
Freq. Response dB	0.2	1.4	1.0	2.0	0.8	-
Group Delay nsec	8	44	40	48	80	-
H.I.A.B NTSC:						
Signal Level dBm	-31.9	-40.2	-50.5*	-42.4	-41.0	-44.1
Rating	4	4-	3-	3-	3	3
Freq. Response dB	0.3	1.0	0.6	1.2	0.9	-
Group Delay nsec	12	44	40	62	85	-
ATV Direct Signal:						
Average power dBm	-33.3	-39.6	-52.4	-45.5	-36.5	-43.1
C/N (6 MHz) dB	48.2	42.2	37.4	37.5	38.2	36.9
Margin dB	19.9	13.6	7.2	8.5	11.8	8.3
ATV Through H.I.A.B:						
Average power dBm	-37.9	-44.8	-56.6	-50.6	-44.9	-48.4
C/N (6 MHz) dB	45.4	40.9	32.7	36.2	42.6	36.3
Margin dB	17.0	12.1	3.6	6.1	11.0	6.7

**Level below FCC minimum level of -44 dBm at end of 100' drop or -47 dBm into a receiver.*
Site Number E1 is the headend test point.

ANALYSIS:
The test channel was one channel above the design frequency of the cable system. One test point had levels below FCC specifications but the ATV receiver operated error free at all the locations. The margin was lowest at the test point with the low received signal levels but still had 3.6 dB of margin after the house in a box. The three fibre runs had trunk amplifier cascades that ranged from 22 to 33, and margins of 7.2 dB to 11.8 dB The headend test point ,E1, is not included in the analysis.

8. GASTONIA CABLEVISION RESULTS SUMMARY

Test Dates:	1994 June 02 - 03
Test Channel:	44 (342 - 348 MHz) Standard
System Bandpass:	50 - 330 MHz
Ch 53 ATV Rx Level:	-50 dBm (~16 dB of Margin)
Rx Site:	30.5 miles from transmitter

SITE NUMBER	F1	F2	F3	F4	F5	F6
No of Trunk Amps	1	22	29	31	43	38
No of Line Extenders	0	0	0	0	0	0
Direct NTSC:						
Signal Level dBm	-38.2	-46.0*	-52.0*	-49.0*	-45.0*	-47.8*
Rating	4-	3+	3+	3+	3+	3+
C/N (6 MHz) dB	51.0	40.3	37.5**	39.7	42.0	41.5
CTB ratio dB	>74	>64	>60	>62	64	64
C/Beat ratio dB	>52	>41	>38	>41	>43	42
Freq. Response dB	2.5	1.8	1.5	4.4†	4.0	3.2
Group Delay nsec	20	-	-	-	-	-
H.I.A.B NTSC:††						
Signal Level dBm	-44.1	-52.0*	-58.1*	-55.0*	-50.0*	-52.5*
Rating	3+	3-	2+	2	3	3
Freq. Response dB	-	2.0	2.0	4.0	4.0	3.0
Group Delay nsec	-	-	-	-	-	-
ATV Direct Signal:						
Average power dBm	-44.2	-52.0	-61.3	-54.1	-53.5	-55.2
C/N (6 MHz) dB	45.2	34.2	29.2	31.8	35.1	34.4
Margin dB	16.4	4.0	0.0	1.1	5.0	4.0
ATV Through H.I.A.B:††						
Average power dBm	-50.8	-58.8	-66.9	-61.1	-57.8	-59.0
C/N (6 MHz) dB	39.4	31.6	21.3	26.4	31.7	31.0
Margin dB	10.4	1.4	-	-	1.4	1.0

** Level below FCC minimum level of -44 dBm at end of 100' drop or -47 dBm into a receiver.*
*** C/N below FCC specification of 40 dB in 4 MHz (38.3 dB in 6 MHz).*
† Exceeds FCC specification of 4 dB
††The H.I.A.B drop amplifier had an oscillation in the test channel causing a beat in the NTSC picture and reducing ATV margin
Site Number F1 is the headend test point.

ANALYSIS

The test channel was two channels above the design frequency of the system. The signal levels were below FCC specifications at all locations and some of the test points exhibited roll-off in the test channel. The ATV receiver worked on the direct feed at all the test points but was producing errors (less than the $3x10^{-6}$ threshold) at one location. The receiver was below threshold after the H. I. A. B. at two locations due, presumably, to the low signal level, inband frequency roll-off and the H.I.A.B oscillation. An in-band oscillation, due to the amplifier in the H.I.A.B. degraded the performance of the ATV and NTSC signals. The headend test point ,F1, is not included in the analysis.

9. VISION CABLE OF SHELBY RESULTS SUMMARY

Test Dates:	1994 June 06 - 07
Test Channel:	10 (192 - 198 MHz) Standard plus some IRC
System Bandpass:	50 - 350/450 MHz
Ch 53 ATV Rx Level:	-45 dBm (~14 dB of Margin with 21 dB gain preamplifier)
Rx Site:	49.0 miles from transmitter

SITE NUMBER	G1	G2	G3	G4	G5
Number of Trunk Amps	0	28	25	47	31
Number of Line Extenders	0	1	2	1	0
Direct NTSC:					
Signal Level dBm	-37.5	-31.2	-35.5	-31.7	-42.6
Rating	4	3	3+	3	3+
C/N (6 MHz) dB	47.8	42.5	41.7	39.7	43.3
CTB ratio dB	84	64	57	61	>65
C/Beat ratio dB	61	>45	>44	39*	>44
Freq. Response dB	2.1	2.5	N/A	0.6	1.4
Group Delay nsec	165	235	100	165	55
H.I.A.B NTSC:					
Signal Level dBm	-40.2	-33.7	-38.1	-33.7	-45.3
Rating	3+	3	3-	3-	2+
Freq. Response dB	2.2	0.8	1.6	0.5	0.6
Group Delay nsec	170	68	180	95	65
ATV Direct Signal:					
Average power dBm	-43.6	-37.4	-41.6	-37.8	-49.2
C/N (6 MHz) dB	44.9	36.0	34.5	35.1	37.0
Margin dB	16.1	7.5	6.1	6.5	7.9
ATV Through H.I.A.B:					
Average power dBm	-46.1	-40.1	-44.5	-40.2	-50.3
C/N (6 MHz) dB	41.4	35.0	35.7	34.3	36.2
Margin dB	12.8	6.6	6.8	5.9	6.7

Site Number G1 is the headend test point.

ANALYSIS

The ATV receiver worked at all locations without errors. The margin at the furthest test site, 47 trunk amplifiers and 1 line extender was 6.5 dB. The headend test point ,G1. is not included in the analysis.

10. CHARLOTTE CABLEVISION RESULTS SUMMARY

Test Dates:	1994 June 07 - 09
Test Channel:	45 (348 - 354 MHz) Standard
System Bandpass:	50 - 330 MHz
Ch 53 ATV Rx Level:	-40 dBm (~15 dB of Margin)
Rx Site:	7.0 miles from transmitter

SITE NUMBER	H1	H2 (AML)	H3	H4	H5	H6	H7 (AML)	H8 (AML)	H9 (AML)	H10 (AML)
Number of Trunk Amps	0	0	30	29	30	15	20	11	15	13
Number of Line Extenders	0	0	1	1	1	1	1	1	1	1
Direct NTSC:										
Signal Level dBm	-36.5	-38.5	-51.0*	-45.7*	-45.0*	-50.7*	-45.5*	-49.0*	-42.6	-39.1
Rating	4+	4	3+	4-	3-	3-	3+	3	3	3+
C/N (6 MHz) dB	55.9	36.3†	40.8	41.8	40.0	42.5	41.5	41.6	42.5	45.7
CTB ratio dB	57	>60	63	63	56	63	58	>64	61	64
C/Beat ratio dB	>58	>39	>42	>63	50	44	42	>43	45	47
Freq. Response dB	0.5	0.8	1.0	1.8	1.0	1.8	5.0**	4.8**	5.0**	4.0
Group Delay nsec	N/A	N/A	N/A	N/A	N/A	105	180	85	90	85
H.I.A.B NTSC:										
Signal Level dBm	-41.0	-44.5	-54.6*	-49.3*	-49.0*	-54.9*	-50.4*	-53.3*	-47.0	-43.5
Rating	4	4-	3	3+	3-	3-	3-	3-	3-	3
Freq. Response dB	0.6	1.0	0.9	1.8	1.8	2.2	5.0**	5.0**	3.0	9.4**
Group Delay nsec	N/A	N/A	N/A	N/A	N/A	102	180	125	N/A	190
ATV Direct Signal:										
Average power dBm	-42.4	-44.5	-59.3	-52.7	-50.3	-57.4	-53.1	-54.7	-48.3	-45.8
C/N (6 MHz) dB	50.1	44.8	31.9	35.1	33.8	35.6	34.9	35.1	36.6	39.2
Margin dB	21.4	14.0	2.2	5.3	4.3	5.8	3.6	3.8	5.9	9.0
ATV Through H.I.A.B:										
Average power dBm	-47.0	-49.9	-62.6	-56.9	-55.5	-63.1	-57.0	-59.6	-53.5	N/A
C/N (6 MHz) dB	44.1	40.8	28.3	32.2	33.1	29.8	32.8	31.3	34.6	N/A
Margin dB	15.4	8.8	--	2.8	3.3	0.2	1.2	1.0	3.5	N/A

** Level below FCC minimum level of -44 dBm at end of 100' drop or -47 dBm into a receiver.*
*** Frequency response outside FCC specification of 4 dB.*
†C/N below FCC specification of 40 dB in 4 MHz (38.3 dB in 6 MHz).
Site Number H1 is the headend standard test point and H2 is the headend AML test point.

ANALYSIS

The system was tested 3 channels above the design frequency of the system. The signal level at most of the test points was below FCC specifications due to the roll off of the system. The ATV receiver still managed to operate error free on the direct input at all the test points with a worst case margin of 2.2 dB. It also operated with a 3.6 dB of margin after a 20 amplifier cascade following a microwave hop. This site had a noise threshold of 31.3 dB, higher than the usual 28 dB value, probably due to the low signal level and 5 dB channel tilt. On the average, the microwave system degraded the white noise threshold by 1.2 dB. The added loss of the house in a box reduced the margin to 1.2 dB or less at three locations and below threshold at one location. The headend test points ,H1 and H2, are not included in the analysis.